SERVICE MANUAL

FUNAI

MODEL

FCM-800

VIDEO CAMERA RECORDER

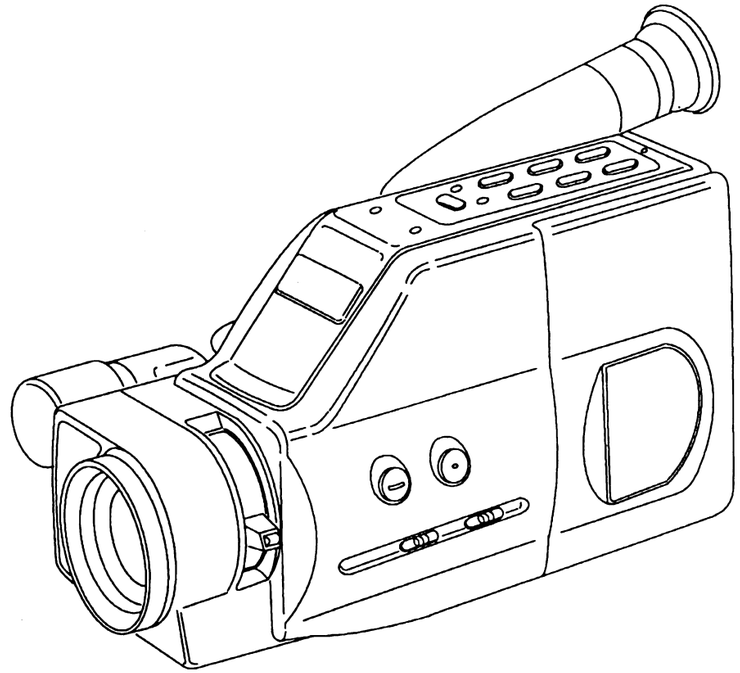

CONTENTS

MAIN SECTION

SPECIFICATIONS ..... 1 – 1
CAUTION OF LITHIUM BATTERIES REPLACEMENT ..... 2 – 1
INSTRUCTIONS FOR HANDLING SEMICONDUCTORS ..... 3 – 1
REPLACEMENT PROCEDURES FOR LEADLESS(CHIP) COMPONENTS ..... 4 – 1
HOW TO REMOVE/INSTALL THE FLAT PACK IC ..... 5 – 1
IMPORTANT SAFETY PRECAUTIONS ..... 6 – 1
DISASSEMBLY INSTRUCTIONS(CABINET) ..... 7 – 1
BLOCK DIAGRAM
- MAIN BLOCK DIAGRAM ..... 8 – 1
- CCD BLOCK DIAGRAM ..... 8 – 2
- PROCESS BLOCK DIAGRAM ..... 8 – 3
- DRIVER BLOCK DIAGRAM ..... 8 – 4
- SERVO/SYSTEM CONTROL BLOCK DIAGRAM ..... 8 – 5

ALIGNMENT INSTRUCTIONS
- WIRING FOR ALIGNMENT ..... 9 – 1
- TEST BOARD SCHEMATIC DIAGRAM ..... 9 – 2
- TEST EQUIPMENT AND TOOLS ..... 9 – 3
- ELECTRICAL ADJUSTMENT INSTRUCTIONS(CAMERA) ..... 9 – 4
- ELECTRICAL ADJUSTMENT INSTRUCTIONS(VIDEO) ..... 9 – 28
- ELECTRICAL ADJUSTMENT INSTRUCTIONS(EVF) ..... 9 – 51

TROUBLESHOOTING GUIDE ..... 10 – 1
P.C.BOARD TOP/BOTTOM VIEW AND ALIGNMENT POINT
- MAIN PCB(TOP VIEW) ..... 11 – 1
- MAIN PCB(BOTTOM VIEW) ..... 11 – 2
- SERVO/SYSTEM CONTROL PCB(TOP VIEW) ..... 11 – 3
- SERVO/SYSTEM CONTROL PCB(BOTTOM VIEW) ..... 11 – 4
- CCD PCB(TOP/BOTTOM VIEW) ..... 11 – 5
- PROCESS PCB(TOP/BOTTOM VIEW) ..... 11 – 6
- DRIVER PCB(TOP VIEW) ..... 11 – 7
- DRIVER PCB(BOTTOM VIEW) ..... 11 – 8
- REAR CONTROL PCB(TOP/BOTTOM VIEW) ..... 11 – 9
- TOP CONTROL PCB(TOP/BOTTOM VIEW) ..... 11 – 9
- CAMERA CONTROL PCB(TOP/BOTTOM VIEW) ..... 11 – 10
- POWER PCB(TOP/BOTTOM VIEW) ..... 11 – 10
- EVF PCB(TOP/BOTTOM VIEW) ..... 11 – 11

WIRING DIAGRAM ..... 12 – 1
REPLACEMENT PARTS LIST/EXPLODED VIEW
- EXPLODED VIEW(CAMERA) ..... 13 – 1
- EXPLODED VIEW(CABINET) ..... 13 – 2
- MECHANICAL PARTS LIST ..... 13 – 3
- ELECTRICAL PARTS LIST ..... 13 – 4

SCHEMATIC DIAGRAM
- STANDARD NOTES ..... 14 – 1
- MAIN SCHEMATIC DIAGRAM ..... 14 – 2
- SERVO/SYSTEM CONTROL SCHEMATIC DIAGRAM ..... 14 – 3
- CCD SCHEMATIC DIAGRAM ..... 14 – 4
- PROCESS SCHEMATIC DIAGRAM ..... 14 – 5
- CONTROL/POWER SCHEMATIC DIAGRAM ..... 14 – 6
- DRIVER SCHEMATIC DIAGRAM ..... 14 – 7
- EVF SCHEMATIC DIAGRAM ..... 14 – 8

SYSTEM CONTROL TIMING CHARTS ..... 15 – 1
LEAD IDENTIFICATIONS ..... 16 – 1
CHIP IDENTIFICATIONS ..... 17 – 1
IC PIN FUNCTION DESCRIPTION
- SYSTEM CONTROL ..... 18 – 1
- EXPANDER ..... 18 – 3
- CHARACTER ..... 18 – 4

DECK MECHANISM SECTION

DISASSEMBLY INSTRUCTIONS(DECK) ..... – 1 –
SERVICE FIXTURES AND TOOLS ..... – 8 –
STANDARD MAINTENANCE ..... – 9 –
MECHANICAL ADJUSTMENT INSTRUCTIONS ..... – 13 –
EXPLODED VIEW(DECK) ..... – 19 –
PARTS LIST(DECK) ..... – 24 –

AC CHARGER SECTION

BLOCK DIAGRAM(CHARGER) ..... – 1 –
ELECTRICAL ADJUSTMENT INSTRUCTIONS(CHARGER) ..... – 2 –
P.C.BOARD TOP/BOTTOM VIEW AND ALIGNMENT POINT ..... – 3 –
EXPLODED VIEW(CHARGER) ..... – 4 –
SCHEMATIC DIAGRAM(CHARGER) ..... – 5 –
PARTS LIST(CHARGER) ..... – 6 –

MAIN SECTION

GENERAL SPECIFICATION

A) SYSTEM

1) RECORDING STANDARD	PAL 625 lines 50 fields/sec
2) FORMAT	8MM Standard
3) RECORDING SYSTEM	2 Heads Herical Scanning for Video
	1 Head for Flying Erase
	FM Hi-Fi (MONO for Audio)
4) TAPE SPEED	SP : 20.051mm/sec
	LP : 10.025mm/sec
5) RECORDING TIME	SP : 90 minutes (with P5-90)
	LP : 180 minutes (with P5-90)
6) TAPE WIDTH	width 8mm
7) MAXMUM BATTERY RECORDING TIME	about 50 minutes
	(Brand new battery, continuous recording)
8) IMAGE SENSOR	1/3 inch CCD (charged coupled device)
9) NUMBERS of PIXELS for CCD	290 k pixels
10) LENS	F/1.6 f=6.7mm
	8:1 power zoom (Nominal f=6.7mm~53.6mm) / by HAND
	Lens with auto iris control
	Macro position with zoom lever lock
	Filter diameter 46mm (Adapter ring is required.)
11) FOCUS	Auto Focus with IR/by HAND
12) VIEWFINDER	Electronic viewfinder with 0.6 inch BLACK/WHITE CRT
13) MINIMUM REQUIRED ILLUMINATION	5 Lux (at F/1.6)
14) BACK LIGHT	Back light position with push
15) DATE/TIME	Recording possible
16) REC REVIEW SYSTEM	
17) EDIT SEARCH SYSTEM	
18) TAPE COUNTER	Electronic tape counter
19) DEW SENSOR	
20) ASSEMBLE RECORDING	Noiseless assemble recording with short rewind
21) BATTERY	DC 6V 1.2A/H Ni-Cd
	Rechargeable battery
22) POWER SOURCE	Battery, AC Adapter
23) POWER CONSUMPTION	7.5W (under recording with DC 6V)
24) DIMENSION	105(W) × 125(H) × 239(D)mm
	289(D)mm (EVF Included)
25) WEIGHT	980g(with out battery)
26) BATTERY WEIGHT	180g

B) JACK

1) A/V JACK (8 pin)	Video output / GND
	Audio output / GND
	DC 5V for RF Conv./ GND
2) DC JACK (ϕ 4.0)	DC power input /GND

C) SWITCH & CONTROL

POWER + CAMERA/VTR	P.OFF ⇨ CAMERA ON ⇨ VTR ON		Push SW
EJECT	Cassete Holder up		Push SW
	VTR POSITION	CAMERA POSITION	
PLAY/REC REVIEW	PLAY mode	REC REVIEW +mode	Push SW
FF CUE/EDIT SEARCH	FF mode	EDIT SEARCH -mode	Push SW
	(CUE mode)		
REW REV/EDIT SEARCH	REW mode	EDIT SEARCH mode	Push SW
	(REW mode)		
STILL	Still mode	Date ON/OFF and Preset	Push SW
STOP	Stop mode	Title ON/OFF and Preset	Push SW
RESET	Counter 0:00:00 Reset		Push SW
MEMORY	Stop at counter 0:00:00		Push SW
BACK LIGHT	Normal iris /Back light		Push SW
FOCUS	Auto / Manual		Slide SW
POWER ZOOMING	Wide/Tele		Seasaw SW
START/STOP	Recording START / STOP		Push SW
SET	Set Key for DATE/TIME and TITLE		Push SW
ADJUST	Adjust Key for DATE/TIME and TITLE		Push SW
FADE	Fade ON/OFF		Push SW
SP/LP	Select the Recording Tape Speed		Slide SW
REMOVE BATTERY			Push SW
DEOPTER ADJUSTMENT	Diopter adjustment (-7 ~ -1 dioptly)		Rotaly SW
MACRO	Mounted on zoom lever		Push SW
HIGH SPEED SHUTTER	Nomal/1/1000 sec		Slide SW

D) DISPLAY / WARNING

CAMERA ON	LED UMBER
VTR ON	LED GREEN
INSIDE OF VIEW FINDER	

PLAY, REC, FF, REW, CUE, REV, STILL, PAUSE, FADE,
LOW LIGHT, MEMORY, COUNTER
BATTERY, DEW, CASSETTE, TAPE END, DATE, TIME

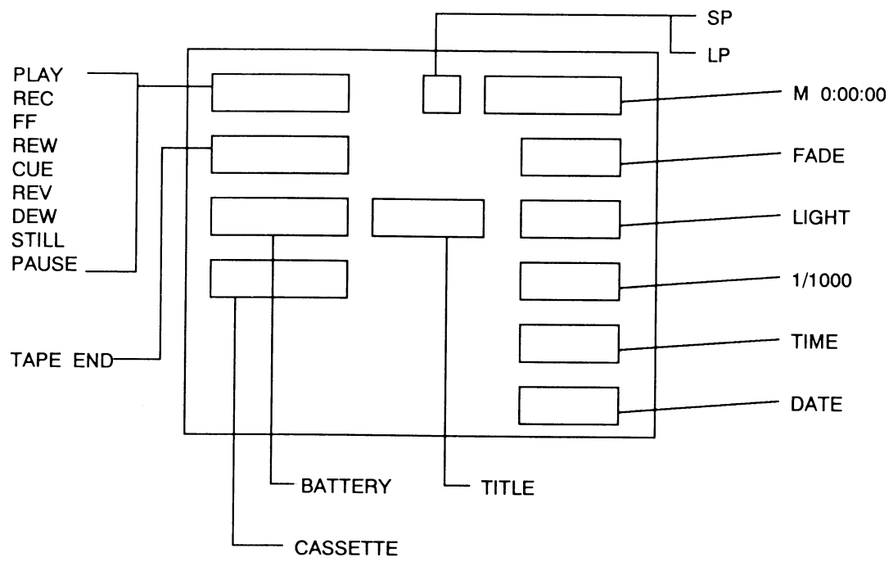

E) SAFETY SYSTEM

TAPE CUT	each mode ⇨ STAND BY mode
DEW	each mode ⇨ STAND BY mode
DRUM MOTOR LOCK	each mode ⇨ STAND BY mode (Expect FF/REW mode)
TAPE END	each mode ⇨ STOP mode
BATTERY DOWN	under DC5.7V each mode ⇨ STOP
REC SAFETY	If CAMERA mode is selected when REC safety position is serected display of "CASSETTE" will be on.
AUTOMATIC PAUSE /STILL RELEASE	PAUSE mode remains on more than 5 min ⇨ STOP mode STILL mode remains on more than 5 min ⇨ PLAY mode

F) SPECIFICATION

1) LENS SECTION	
FOCALLENGTH	f=6.7mm ~ 53.6mm (Nominal)
ZOOM RATIO	8:1 (Nominal)
F.NUMBER	1:1.6
FILTER DIAMETER	M46mm
2) CAMERA SECTION	
VIDEO OUTPUT	1.0 ± 0.1Vp-p
HOLIZONTAL RESOLUTION	more than 300 line
VIDEO S/N RATIO	more than 45dB
MINIMUM REQUIRED ILLUMINATION	5 lux
ILLUMINATION RANGE	5 ~ 100,000 lux
AUTO WHITE	2,500 K ~ 7,000 K
BALANCE RANGE	
BACK LIGHT	50% level up
3) MECHANIZUM SECTION	
TAPE SPEED	20.051mm / sec(SP)
FF/REW TIME	within 6.5min at DC6.0V (P5-90)
LOADING/UNLOADING TIME	within 5sec at DC6.0V
WOW and FLUTTER	within 0.1% <CCIR/WTD> at SP mode R/P
JITTER LOW	within 0.15% at SP mode PB
CUE / REV SPEED	3 times (SP)
4) VCR SECTION	
VIDEO OUTPUT	1.0V ± 0.2Vp-p (75 Ω unbalanced)
VIDEO S/N RATIO	more than 43dB (SP)
RESOLUTION	more than 220 lines (SP)
AUDIO OUTPUT	-10dBs (10k Ω load)
AUDIO S/N RATIO	more than 40dB (RMS) (SP)
AUDIO FREQ, RESPONSE	200 ~ 12,000Hz(SP)
5) Others	
Operation tempreture	0℃ ~ +40℃
Strage tempreture	-20℃ ~ +60℃

ACCESSORIES

1) INSTRUCTION MANUAL
2) 8MM CASSETTE
3) BATTERY PACK
4) AC ADAPTER and BATTERY CHARGER
5) DC CABLE
6) AV CABLE with 8PINS PLUG
7) CARRING STARP
8) BATTERY for BACK up (CLOCK)

OPTION

1) RF CONV. UNIT WITH 8 pin PLUG
2) CABLE FOR RF CONV

CAUTION OF LITHIUM BATTERIES REPLACEMENT

ADVARSEL!

Lithiumbatteri - Eksplosionsfare ved fejlagtig handtering.
Udskiftning má kun ske med batteri
af samme fabrikat og type.
Levér det brugte batteri tilbage til leverand ϕ ren.

ADVARSEL

Lithiumbatteri - Eksplosjonsfare.
Ved utskifting benyttes kun batteri som
anbefalt av apparatfabrikanten.
Brukt batteri returneres apparatleverand ϕ ren.

VARNING

Explosionsfara vid felaktigt batteribyte.
Anvand samma batterityp eller en ekvivalent
typ som rekommenderas av apparattillverkaren.
Kassera anvant batteri enligt fabrikantens
instruktion.

VAROITUS

Paristo voi rajahtaa, jos se on virheellisesti asennettu.
Vaihda paristo ainoastaan laitevalmistajan suosittelemaan
tyyppiin. Havita kaytetty paristo valmistajan ohjeiden
mukaisesti.

CAUTION

Danger of explosion if battery is incorrectly replaced.
Replace only with the same or equivalent type recommended
by the equipment manufacturer. Discard used batteries acco-
rding to manufacturer's instructions.

INSTRUCTIONS FOR HANDLING SEMICONDUCTORS

Electrostatic breakdown of the semiconductors may occur due to a potential difference caused by electrostatic charge during unpacking or repair work.

Ground for Human Body

Be sure to wear a grounding band (1 Mohm) that is properly grounded to remove any static electricity that may be charged on the body.

Ground for Work bench

Be sure to place a conductive sheet or copper plate with proper grounding (1 Mohm) on the work bench or other surface, where the semiconductors are to be placed.

Because the static electricity charge on the clothing will not escape through the body grounding band, be careful to avoid contact of semiconductors with clothing.

INCORRECT

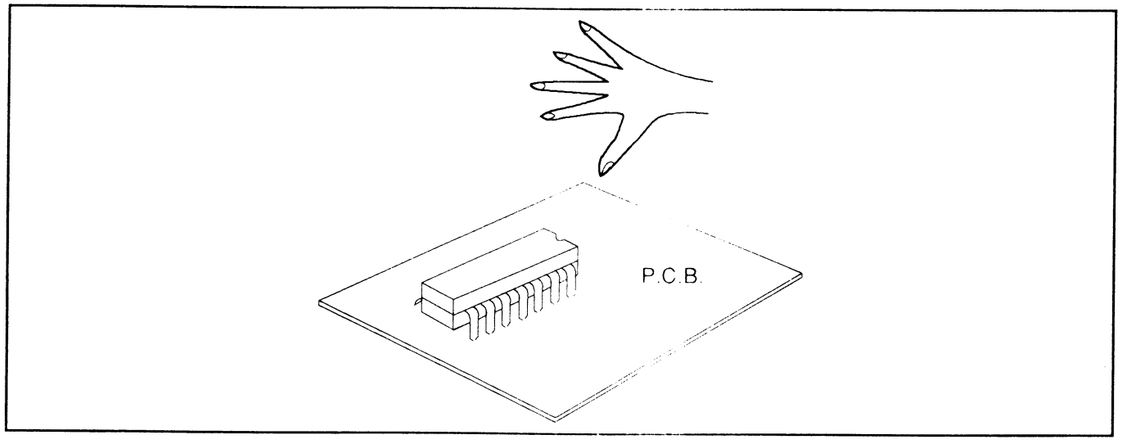

CORRECT

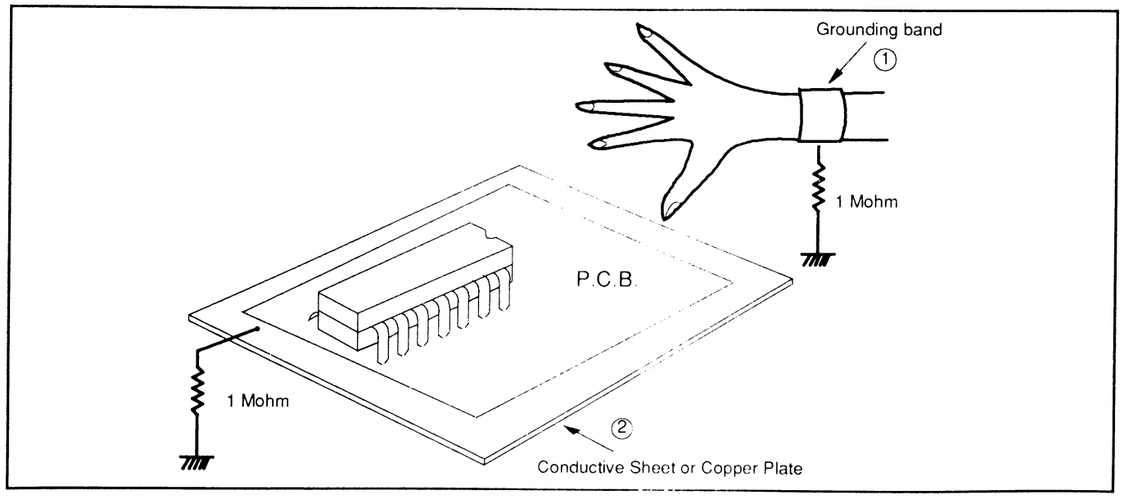

REPLACEMENT PROCEDURES FOR LEADLESS (CHIP) COMPONENTS

The following procedures are recommended for the replacement of the leadless components used in this unit.

1. Preparation for replacement

a. Soldering Iron
Use a pencil-type soldering iron (less than 30 watts).

b. Solder
Eutectic solder (Tin 63%, Lead 37%) is recommended.

c. Soldering time
Do not apply heat for more than 4 seconds.

d. Preheating
Leadless capacitor must be preheated before installation.
(130°C-150°C, for about two minutes.)

Note:

a. Leadless components must not be reused after removal.

b. Excessive mechanical stress and rubbing for the component electrode must be avoided.

2. Removing the leadless component

Grasp the leadless component body with tweezers and alternately apply heat to both electrodes. When the solder on both electrodes has melted, remove leadless component with a twisting motion.

Note:

a. Do not attempt to lift the component off the board until the component is completely disconnected from the board by the twisting action.

b. Take care not to break the copper foil on printed board.

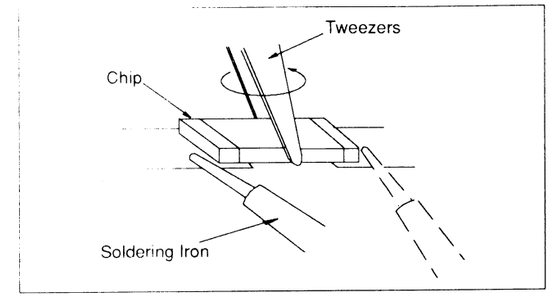

3. Installing the leadless component

a. Presolder the contact points of the circuit board.

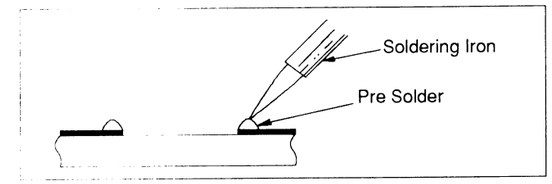

b. Press the part downward with tweezers and solder both electrodes as shown below.

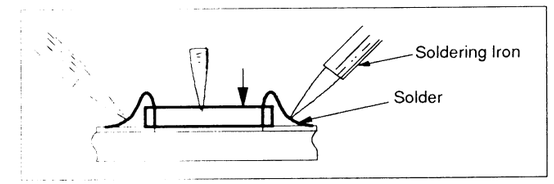

Note:

Do not glue the replacement leadless component to the circuit board.

HOW TO REMOVE / INSTALL THE FLAT PACK IC

1. Removal
(With Hot - Air Flat Pack - IC Desoldering Machine)
(1) Prepare the HOT - AIR FLAT PACK - IC DESOLDERING MACHINE, then apply hot air to Flat Pack - IC (about 5~6 seconds).

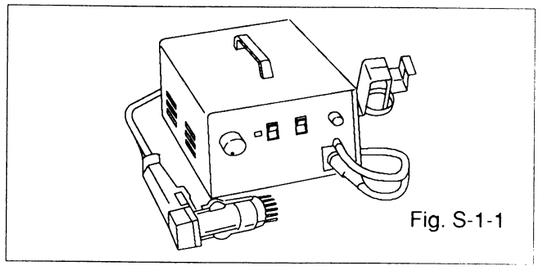

Fig. S-1-1

(2) Remove the Flat Pack- IC with tweezers while applying the hot air.

Caution:

1 Do not supply the hot air to the chip parts around the Flat Pack - IC for over 6 seconds as damage may occur to the chip parts.
Put Masking Tape around the Flat Pack - IC to protect other parts from damage.

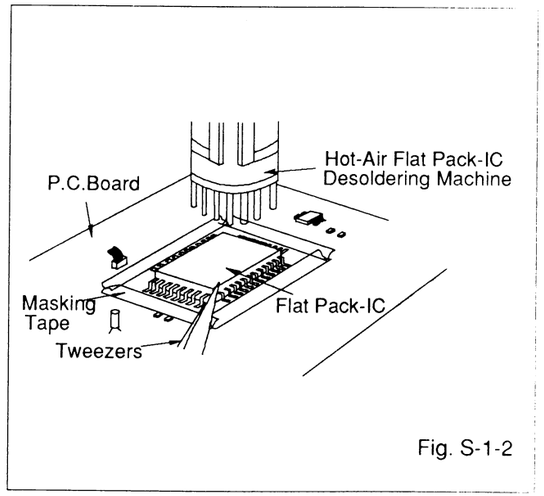

Fig. S-1-2

2 The Flat Pack - IC on the P.C.B. is affixed with glue, so be careful not to break or damage the foil of each pin or solder lands under the IC when removing it.

With Soldering Iron:

(1) Using De-solder braid, remove the solder from all pins of the Flat Pack - IC. When you use solder flux which is applied to all pins of the Flat Pack - IC, you can remove it easily.

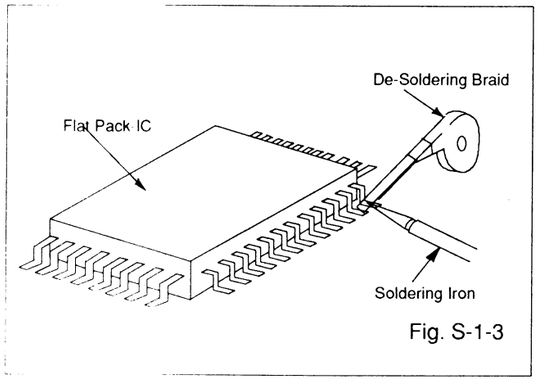

Fig. S-1-3

(2) Lift each lead of the Flat Pack-IC upward one by one using a sharp pin or wire to which solder will not adhere (iron wire). When heating the pins, use a fine tip soldering iron or a hot air blower.

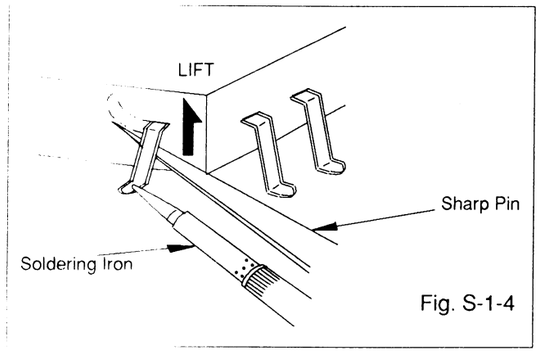

Fig. S-1-4

With Iron Wire:

(1) Using De-soldering braid, remove the solder from all pins of the Flat Pack - IC. When you use solder flux which is applied to all pins of the Flat Pack - IC, you can remove it easily.
(2) Affix the wire to a workbench or solid mounting point, as shown in Fig. S-1-5.
(3) Pull up wire as the solder melts so as to lift the IC leads from the P.C.B. contact pads, while heating the pins using a fine tip soldering iron or hot air blower.

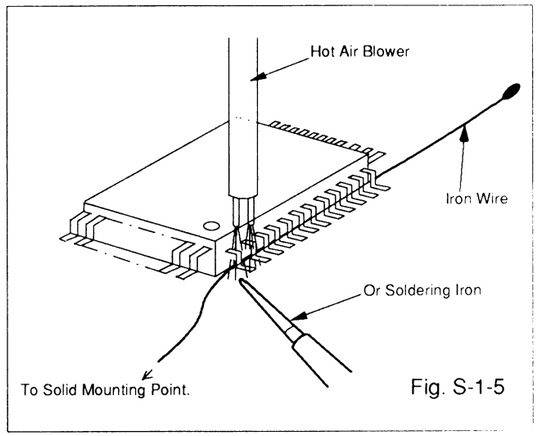

Fig. S-1-5

Note:
When using a soldering iron, care must be taken to ensure that the Flat Pack - IC is not being held by glue or when it is removed from the P.C.B., it may be damaged if force is used.

2. Installation
(1) Using a De-solder braid, remove the solder from the foil of each pin of the Flat Pack - IC on the P.C.B. so you can install a replacement Flat Pack - IC more easily.
(2) The "●" mark on the Flat Pack - IC indicates pin 1. (See Fig. S-1-6) Make sure this mark matches the 1 on the P.C.B. when positioning for installation. Then pre - solder the four corners of the Flat Pack- IC (See Fig.S-1-7).

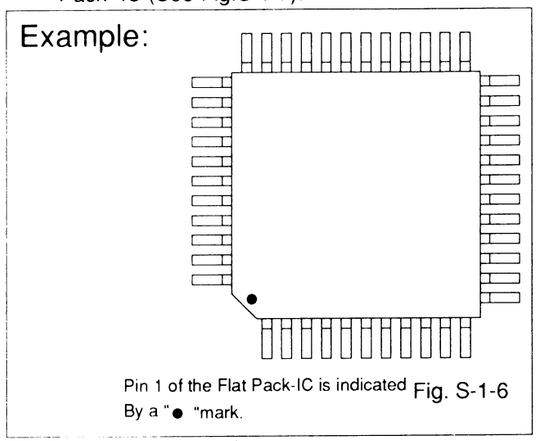

Fig. S-1-6

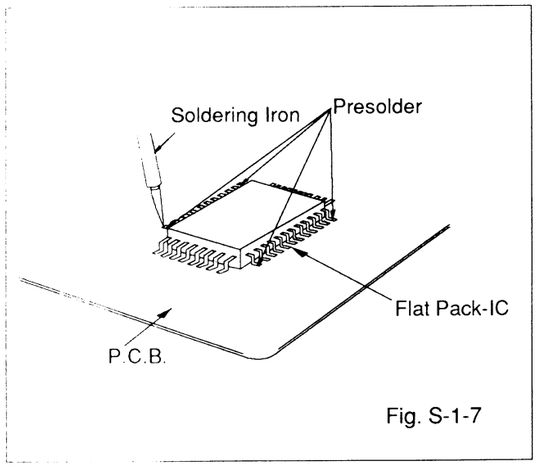

Fig. S-1-7

(3) Solder all pins of the Flat Pack - IC. Make sure that none of the pins have solder bridges.

IMPORTANT SAFETY PRECAUTIONS

Prior to shipment from the factory, our products are strictly inspected to conform to the recognized product safety and electrical codes of the countries in which they are to be sold. However, in order to maintain such compliance, it is equally important to implement the following precautions when a set is being serviced.

PRECAUTIONS DURING SERVICING

1. Locations requiring special caution are denoted by labels and inscribed on the cabinet, chassis and certain parts of the product. When performing service, be sure to read and comply with these and other cautionary notices appearing in the operation and service manuals.

2. Parts identified by the ⚠ symbol are critical for safety. Replace only with specified part numbers.

3. Use specified internal wiring. Note especially :
   1) Wires covered with PVC tubing
   2) Double insulated wires
   3) High voltage leads

4. Use specified insulating materials for hazardous live parts. Note especially :
   1) Insulation Tape
   2) PVC tubing
   3) Spacers
   4) Insulation sheets for transistors

5. Observe that wires do not contact heat producing parts (heat sinks, oxide metal film resistors, fusible resistors, etc.)

6. Check that replaced wires do not contact sharp edged or pointed parts.

7. Also check areas surrounding repaired locations.

DISASSEMBLY INSTRUCTIONS (CABINET)

1. DISASSEMBLY FLOW CHART

This flow chart indicates the disassembly steps of the cabinet parts, VCP Unit and the P.C.Boards in order. Bend, route and dress the cables as they were originally.

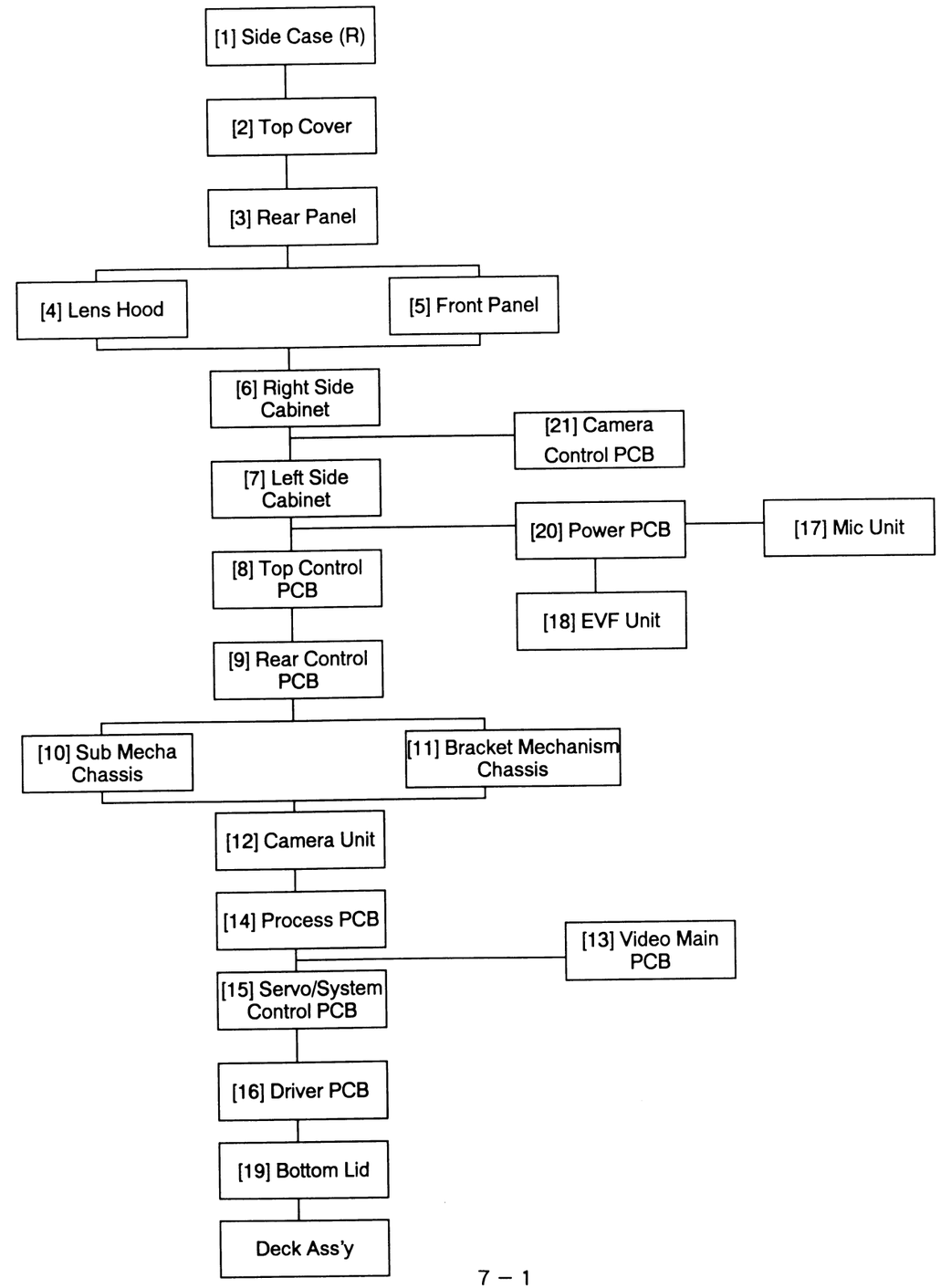

STEP/LOC NO.	PART	REMOVAL		
		Fig. No	REMOVE/＊UNLOCK/RELEASE/UNPLUG/UNCLAMP/UNSOLDER	Note
[1]	Side Case (R)	Fig. 1	2(S − 1)	–
[2]	Top Panel	Fig. 2	3(S − 3) ＊ 2(L − 2)	1
[3]	Rear Panel	Fig. 2	3(S − 2) ＊ 2(L − 1)	2
[4]	Lens Hood	Fig. 3	----------	3
[5]	Front Panel	Fig. 3	＊ 2(L − 3), (S − 17)	–
[6]	Right Side Cabinet	Fig. 4	＊ 2(L − 4) 2(S − 4) 2(S − 5) Connector (CN31)	–
[7]	Left Side Cabinet	Fig. 5	＊ Connectors (CN03, CN01, CN02)	–
[8]	Top Control PCB	Fig. 5	2(S − 6) ＊ Connectors (CL19)	–
[9]	Rear Contorl PCB	Fig. 5	2(S − 7) ＊ Connectors (CL18)	–
[10]	Sub Mechanism Chassis	Fig. 5	3(S − 8)	–
[11]	Bracket Mechanism Chassis	Fig. 5	4(S − 9)	–
[12]	Camera Unit	Fig. 5	(S − 10)	4
[13]	Video Main PCB	Fig. 6	＊ Connectors (CL06, CL07, CL08, CL09, CL10)	–
[14]	Process PCB	Fig. 6	＊ Connectors (CN30, CN29)	–
[15]	Servo/System Control PCB	Fig. 7	2(S − 11) ＊ Connectors (CN13, CN15, CN16, CN17)	–
[16]	Driver PCB	Fig. 8	2(S − 12) ＊ Connectors (CN23, CN24, CN26 ,CN22)	–
[17]	Mic Unit	Fig. 9	＊ (L − 5) Connector (CN03)	–
[18]	EVF Unit	Fig. 9	2(S − 13) Connector (CN02)	–
[19]	Bottom Lid	Fig. 5	2(S − 14)	–
[20]	Power PCB	Fig. 10	6(S − 15)	–
[21]	Camera Control PCB	Fig. 11	3(S − 16)	–

Reference <Notes> in Table

1. Remove 3 Screws(S − 3), then pull up the Top Panel in the direction of the arrow. Then release 2 Locking Tabs(L − 2).
2. Remove 3 Screws(S − 2), then pull up the Rear Panel in the direction of the arrow, then release 2 Locking Tabs(L − 1).
3. When removing the Lens, turn the Lens Hood counterclockwise.
4. When reinstall the Camera Unit, CCD PCB and Process PCB onto the Left Side Cabinet, confirm that CCD PCB and Process PCB is installed onto the Groove of Bottom Lid.

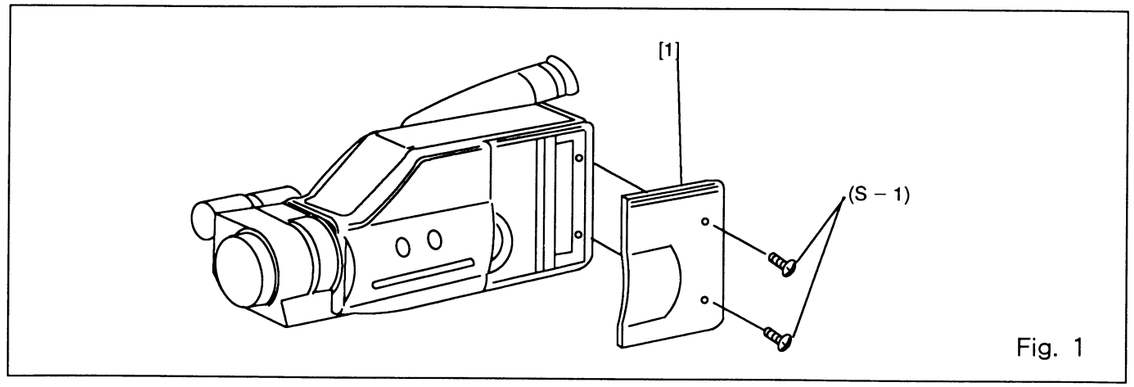

Fig. 1

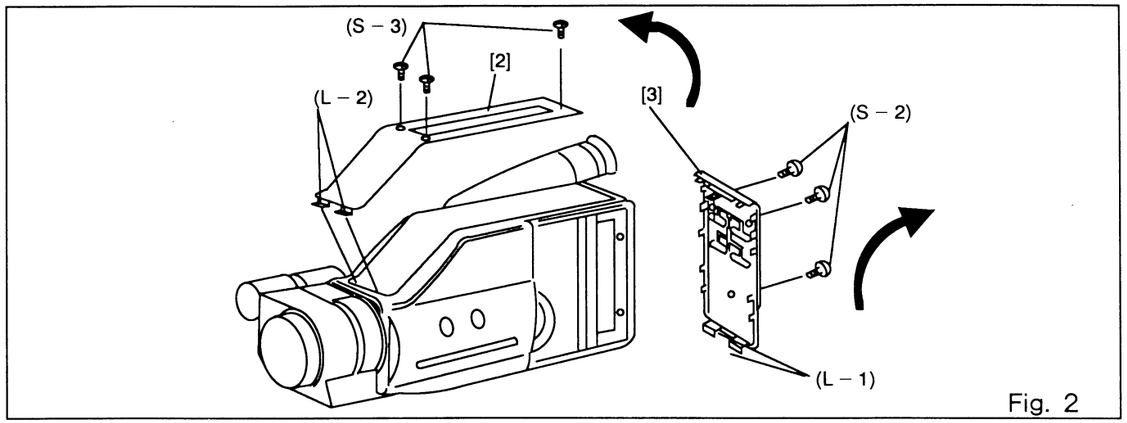

Fig. 2

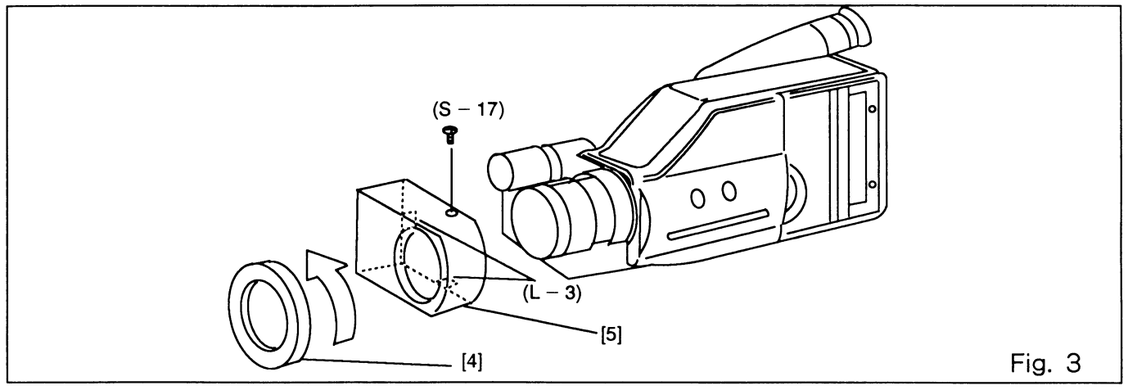

Fig. 3

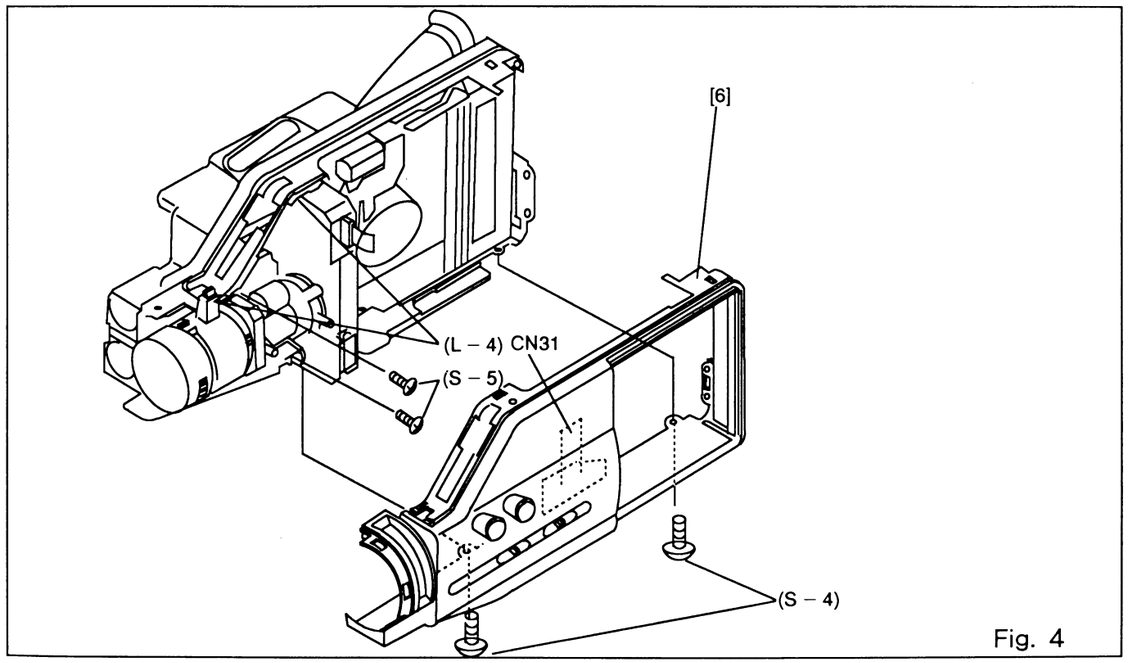

Fig. 4

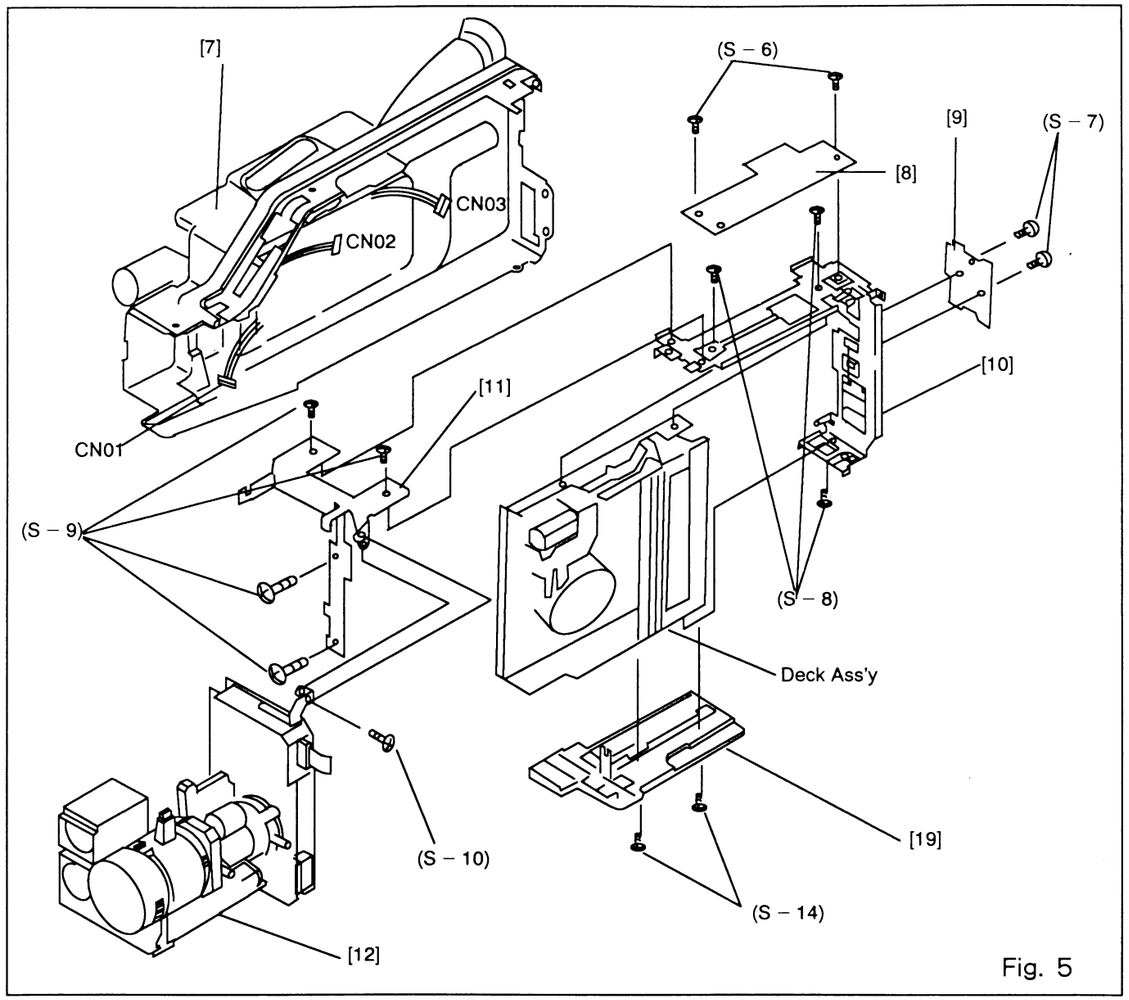

Fig. 5

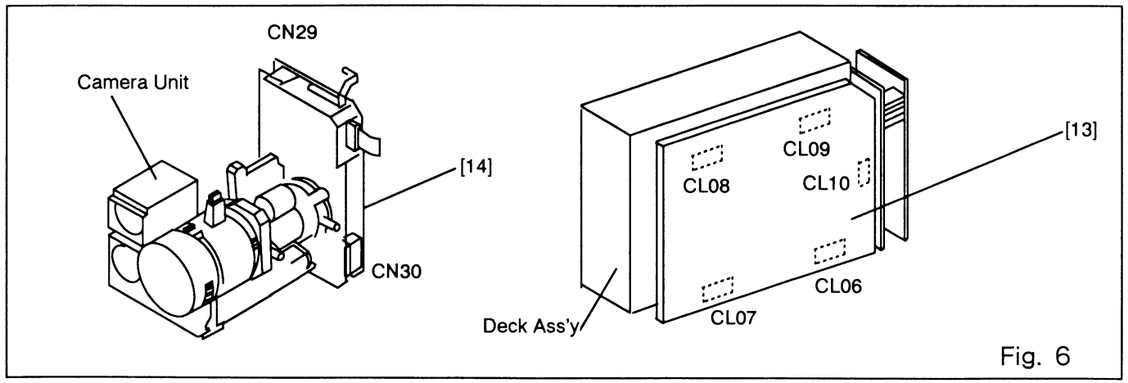

Fig. 6

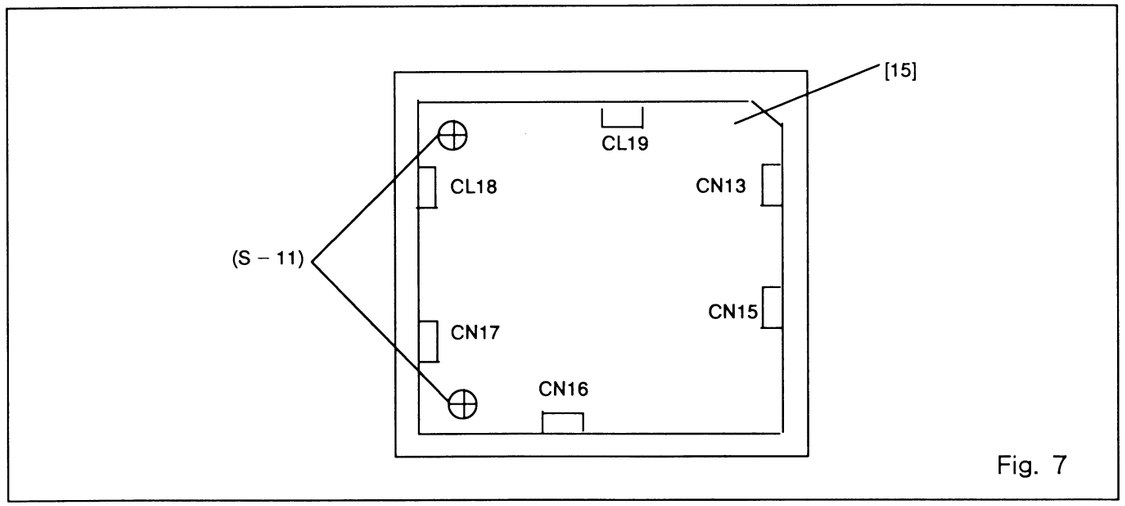

Fig. 7

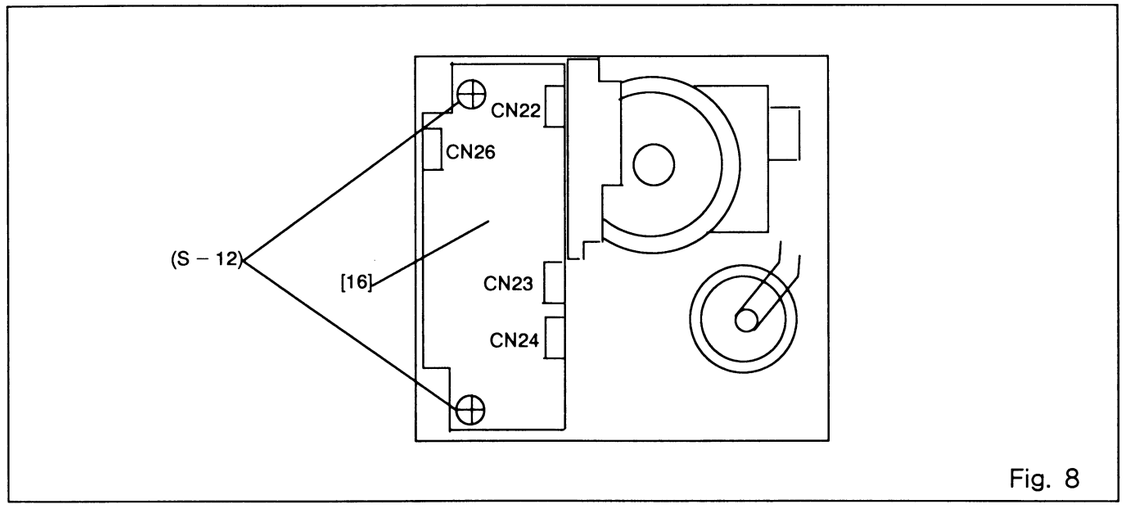

Fig. 8

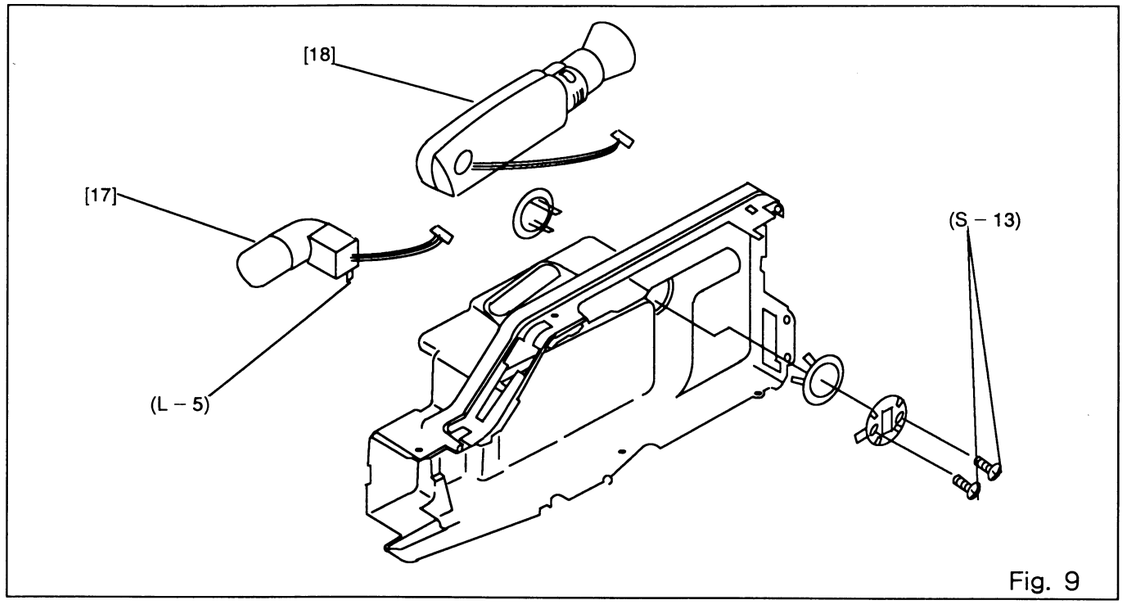

Fig. 9

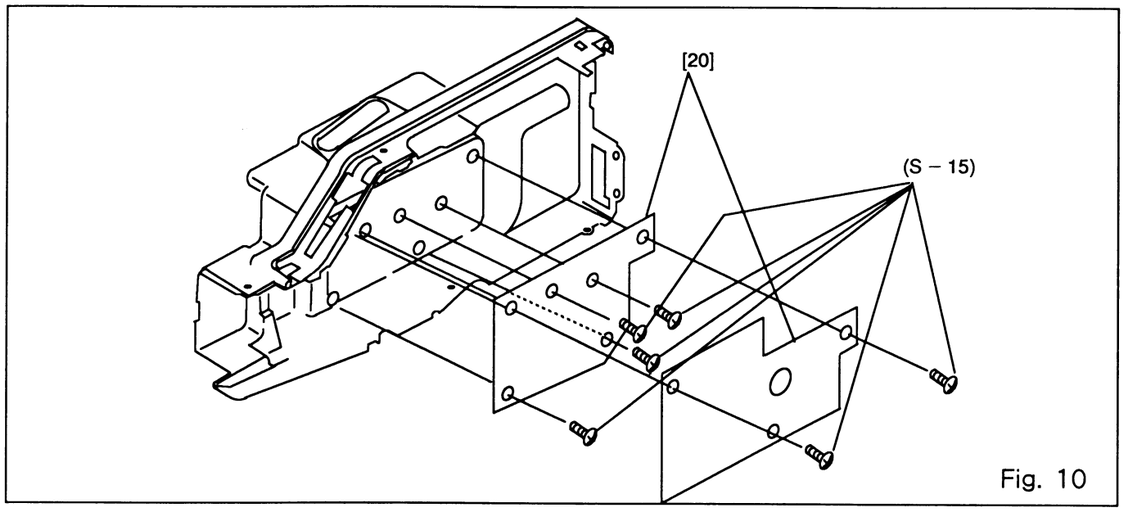

Fig. 10

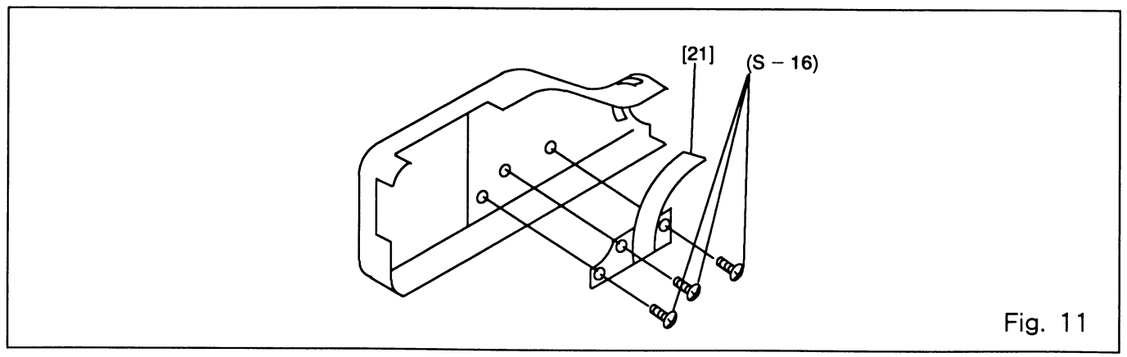

Fig. 11

CAMERA ELECTRICAL ADJUSTMENT

Note:
All adjustment procedures must be proceeded in order of numbering.

1. DC / DC Conv. Voltage Adjustment 5V

Test Point	Adj. Point	Mode	Input
TP51 (5V) TP04 (GND)	VR51 (5V)	---	---
Tape	M. EQ.	Spec.	
---	DC VOLTMETER	5.0V ±0.05V	
Connections of M. EQ.			

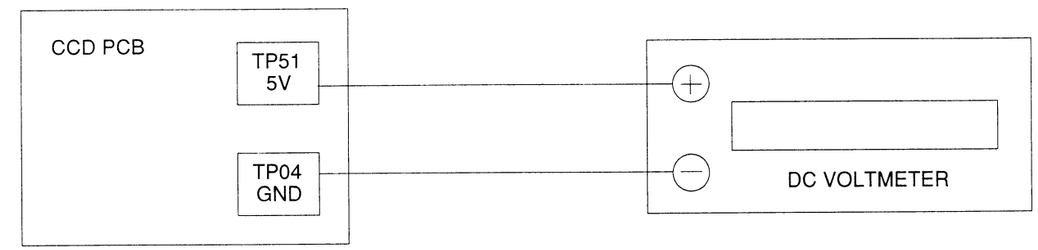

Reference notes:
1. Connect equipments as shown in the above table.
2. Adjust VR51 for reading 5.0V ±0.05V on the DC voltmeter.

2. DC / DC Conv. Voltage Adjustment 9V

Test Point	Adj. Point	Mode	Input
TP53 (9V) TP04 (GND)	VR53 (9V)	---	---
Tape	M. EQ.	Spec.	
---	DC VOLTMETER	9.0V ±0.1V	

Connections of M. EQ.

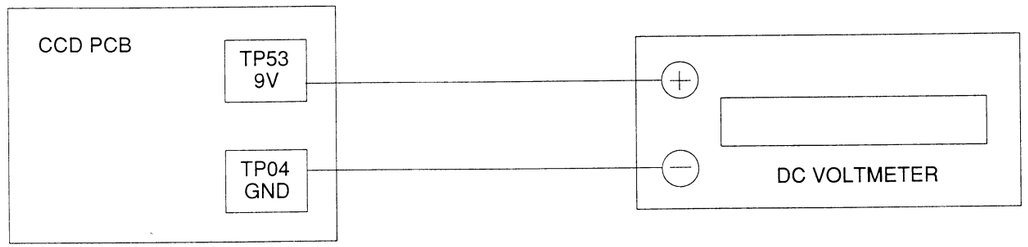

Reference notes:

1. Connect equipments as shown in the above table.
2. Adjust VR53 for reading 9.0V ±0.1V on the DC voltmeter.

3. Frequency Adjustment

Test Point	Adj. Point	Mode	Input
TP01 (CLK) TP04 (GND)	TC01	---	---
Tape	M. EQ.	Spec.	
---	OSCILLOSCOPE FREQUENCY COUNTER	9.656250MHz ±20Hz	

Connections of M. EQ.

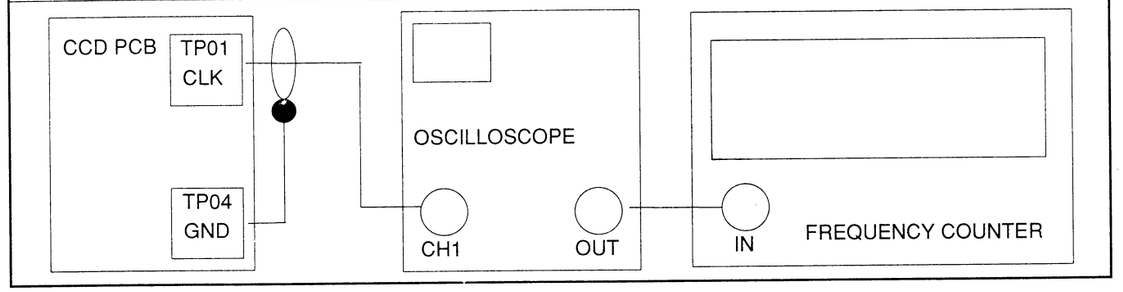

Reference notes:

1. Connect equipments as shown in the above table.
2. Adjust TC01 for reading 9.656250MHz ±20Hz on the frequency counter.

4. PLL ERR Voltage Adjustment

Test Point	Adj. Point	Mode	Input
TP108 (ERR) TP111(GND)	TC101	---	---
Tape	M. EQ.	Spec.	
---	DC VOLTMETER	2.5V ±0.1V	
Connections of M. EQ.			

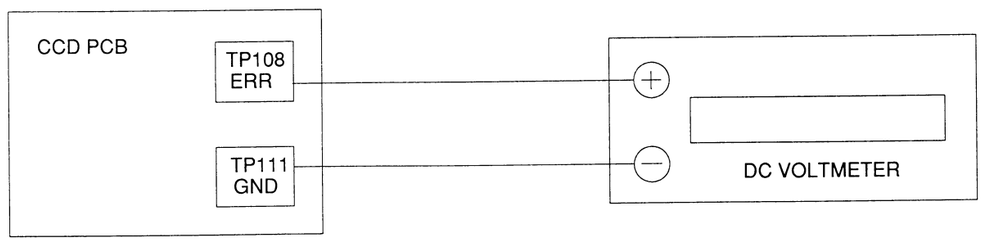

Reference notes:

1. Connect equipments as shown in the above table.
2. Adjust TC101 for reading 2.5V ±0.1V on the DC Voltmeter.

5. Focus Pre-adjustment

Test Point	Adj. Point	Mode	Input
CAM OUT	ZOOM RING	---	GRAY SCALE CHART
Tape	M. EQ.	Spec.	
---	VIEWER	BEST FOCUS	
Connections of M. EQ.			

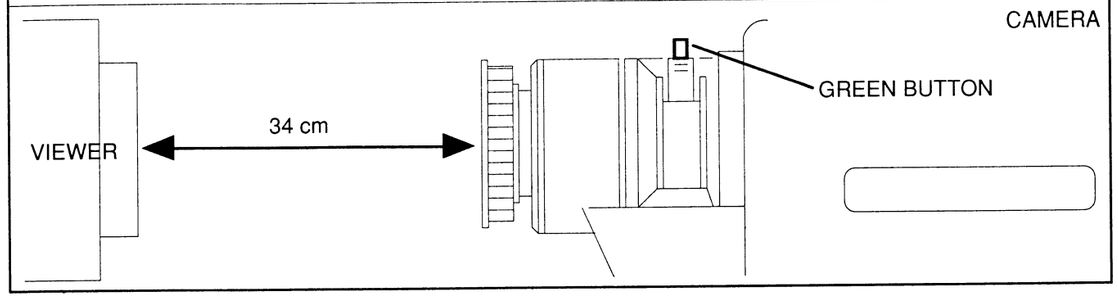

Reference notes:

1. Set equipments as shown in the above table.
2. Set the Viewer 34 cm distance in front of the camera.
3. Set the gray scale chart in Standard pattern frame of the Viewer.
   Depressing the green button, turn the zoom ring toward the Macro position to get the best focus.

6. Blooming Pre-adjustment

Test Point	Adj. Point	Mode	Input
TP02 (CCD OUT) TP05 (GND) TP109(CA-Y+C)	VR03 (BLOOMING)	---	GRAY SCALE CHART
Tape	M. EQ.	Spec.	
---	OSCILLOSCOPE VIEWER	SEE BELOW	

Connections of M. EQ.

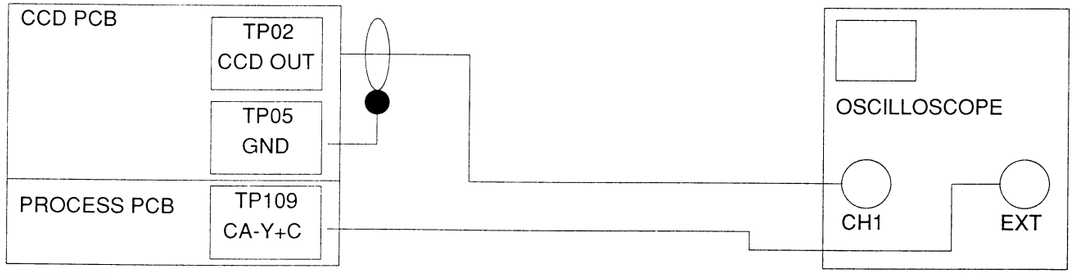

Figure

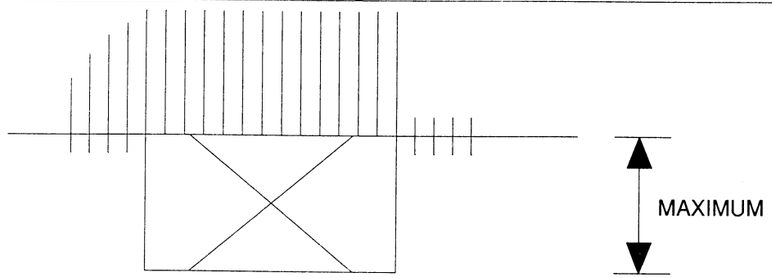

Reference notes:

1. Connect equipments as shown in the above table.
2. Set the Viewer 34 cm distance in front of the camera.
3. Set the gray scale chart in standard pattern frame of the Viewer.
4. Adjust VR03 for reading maximum CCD OUT level on the oscilloscope.

7. Iris Normal Level Adjustment

Test Point	Adj. Point	Mode	Input
TP03 (CDS OUT) TP05 (GND) TP109 (CA-Y+C)	VR01 (IRIS-N)	---	GRAY SCALE CHART
Tape	M. EQ.	Spec.	
---	OSCILLOSCOPE VIEWER	450Vp-p ±15mV	

Connections of M. EQ.

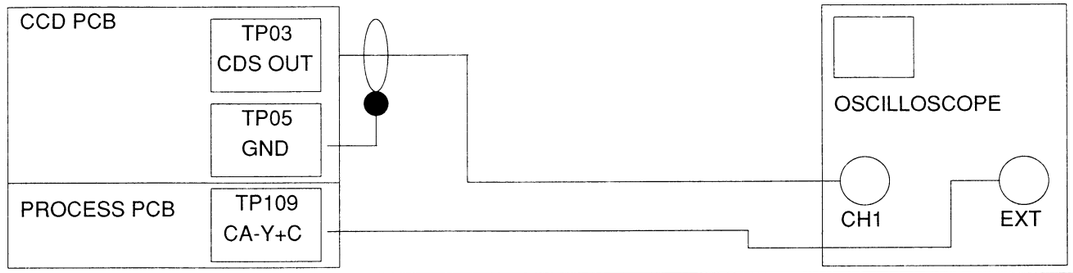

Figure

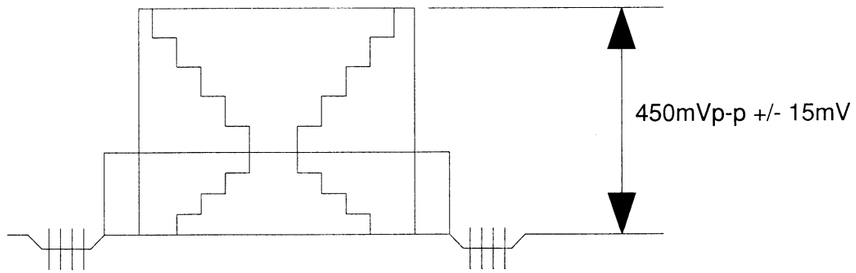

Reference notes:

1. Connect equipments as shown in the above table.
2. Set the Viewer 34 cm distance in front of the camera.
3. Set the gray scale chart in standard pattern frame of the Viewer.
4. Adjust VR01 for reading 450 mVp-p ±15mV on the oscilloscope.

8. Iris High Level Adjustment

Test Point	Adj. Point	Mode	Input
TP03 (CDS OUT) TP05 (GND) TP109 (CA-Y+C)	VR02 (IRIS-H)	---	GRAY SCALE CHART
Tape	M. EQ.	Spec.	
---	OSCILLOSCOPE VIEWER	550mVp-p ±15mV	

Connections of M. EQ.

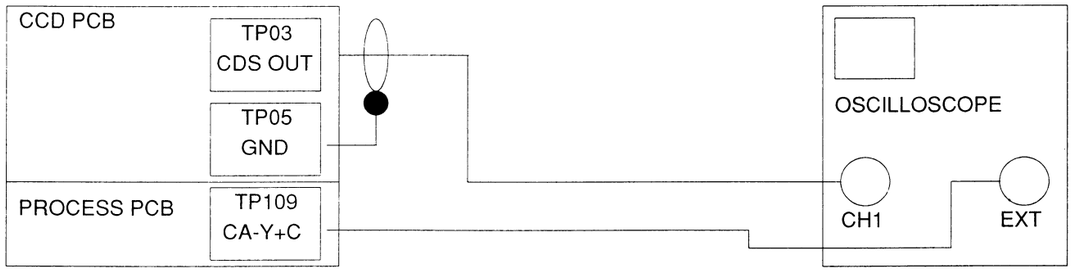

Figure

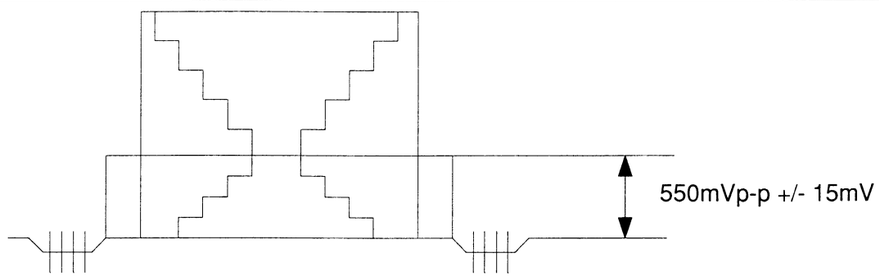

Reference note:

1. Connect equipments as shown in the above table.
2. Set the viewer 34 cm distance in front of the camera.
3. Set the gray scale chart in standard pattern frame of the Viewer.
4. Turn on the B-L SW (Black Light Switch).
5. Adjust VR02 for reading 550 mVp-p ±15mV on the oscilloscope.
6. Turn off the B-L SW after the adjustment.

9. PRE AMP. Adjustment

Test Point	Adj. Point	Mode	Input
TP02 (CCD OUT) TP05 (GND) TP109 (CA-Y+C)	VR04 (P-AMP-G)	---	GRAY SCALE CHART
Tape	M. EQ.	Spec.	
---	OSCILLOSCOPE VIEWER	250mVp-p ±10mV	

Connections of M. EQ.

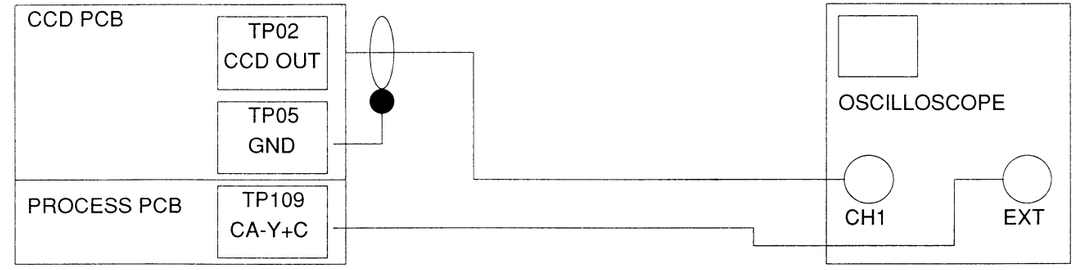

Figure

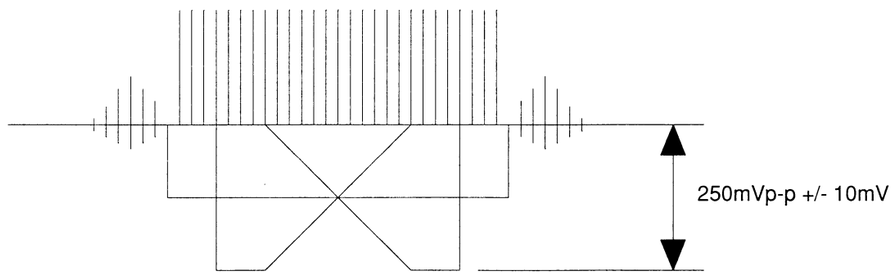

Reference notes:

1. Connect equipments as shown in the above table.
2. Set the Viewer 34 cm distance in front of the camera.
3. Set the gray scale chart in standard pattern frame of the Viewer.
4. Adjust VR04 for reading 250mVp-p ±10mV on the oscilloscope.

10. Low Clip Adjustment

Test Point	Adj. Point	Mode	Input
TP117 (Y) TP111 (GND) TP109(CA-Y+C)	VR102 (OP.-PD.)	---	---
Tape	M. EQ.	Spec.	
---	OSCILLOSCOPE	SEE BELOW	

Connections of M. EQ.

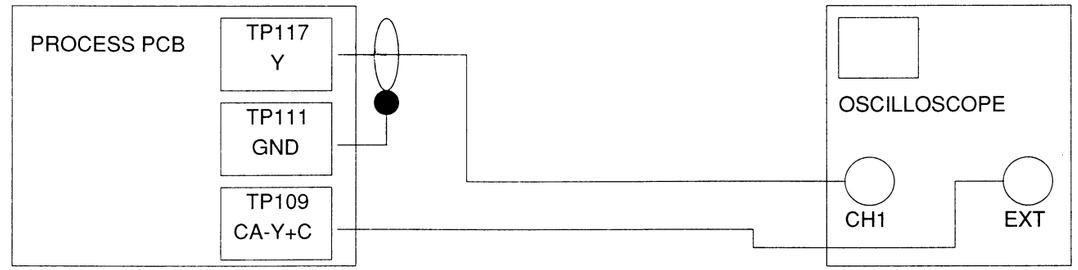

Figure

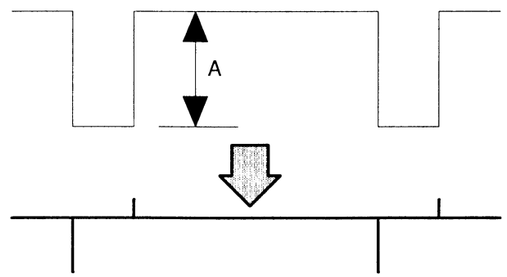

Reference notes:

1. Connect equipments as shown in the above table.
2. Set the Lens Cap on the camera.
3. Adjust VR102 to get the minimum level of "A". ("A" =4*mVp–p*)
4. Remove the Lens Cap after the adjustment.

11. Y. 1H Level Adjustment

Test Point	Adj. Point	Mode	Input
TP117 (Y) TP112 (Y 1H) TP111 (GND) TP109(CA-Y+C)	VR140 (Y 1H)	---	GRAY SCALE CHART
Tape	M. EQ.	Spec.	
---	OSCILLOSCOPE VIEWER	SEE BELOW	

Connections of M. EQ.

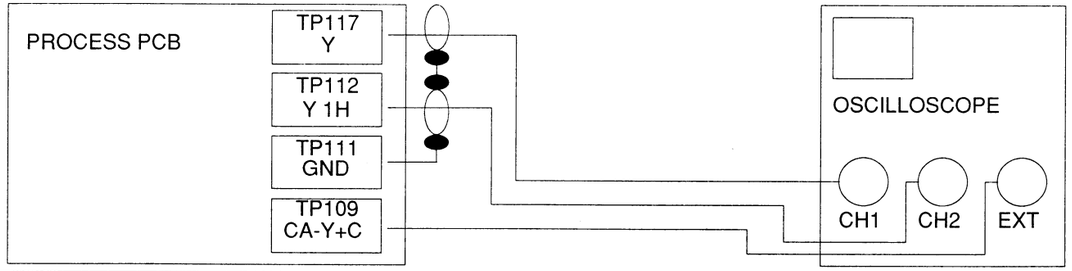

Figure

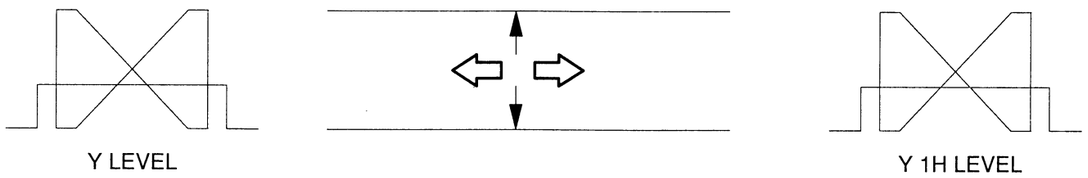

Reference notes:

1. Connect equipments as shown in the above table.
2. Set the viewer 34 cm distance in front of the camera.
3. Set the gray scale chart in standard frame of the Viewer.
4. Adjust VR140 to obtain the same level on both channel of the oscilloscope.

12. Burst Level Adjustment

Test Point	Adj. Point	Mode	Input
TP109 (CA-Y+C) TP111 (GND)	VR138 (BURST-LEVEL)	---	GRAY SCALE CHART
Tape	M. EQ.	Spec.	
---	OSCILLOSCOPE VIEWER	600mVp-p ±10mV	

Connections of M. EQ.

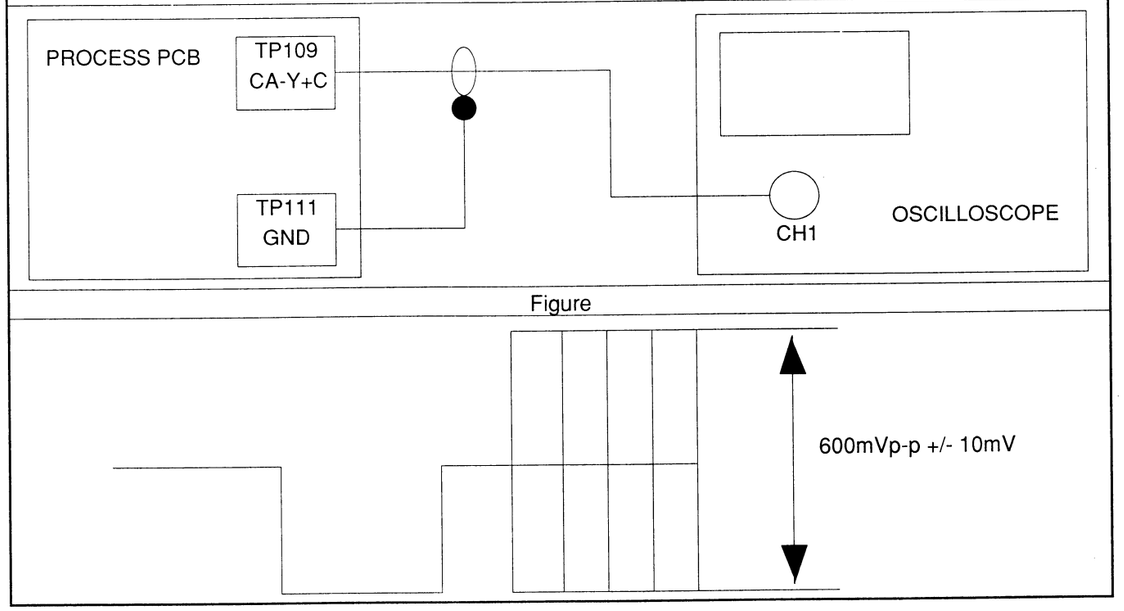

Reference notes:

1. Connect equipments as shown in the above table.
2. Set the Viewer 34 cm distance in front of the camera.
3. Set the gray scale chart in standard pattern frame of the Viewer.
4. Adjust VR138 for reading 600mVp-p ±10mV on the oscilloscope.

13. Hue Adjustment

Test Point	Adj. Point	Mode	Input
CAM OUT	VR135 (HUE)	---	COLOR BAR CHART
Tape	M. EQ.	Spec.	
---	TV MONITOR VRCTOR SCOPE VIEWER	SEE BELOW	

Connections of M. EQ.

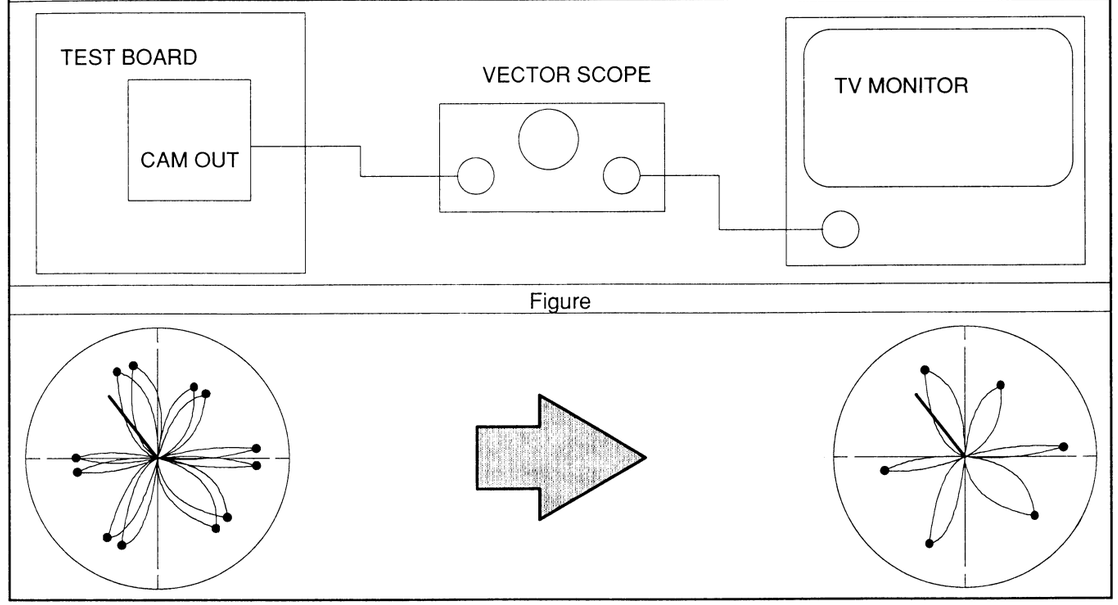

Reference notes:

1. Connect equipments as shown in the above table.
2. Set the Viewer 34 cm distance in front of the camera.
3. Set the color bar chart in standard pattern frame of the Viewer.
4. Adjust VR135 to overlap each outer point of 6 color Spots.

14. B-Y / R-Y OFF-SET Adjustment

Test Point	Adj. Point	Mode	Input
CAM OUT	VR133 (B-Y OFF SET) VR132 (R-Y OFF SET)	---	COLOR BAR CHART
Tape	M. EQ.	Spec.	
---	VECTOR SCOPE TV MONITOR VIEWER	SEE BELOW	

Connections of M. EQ.

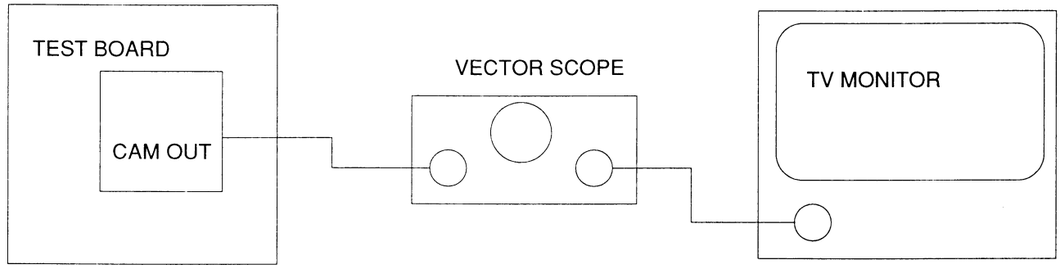

Figure

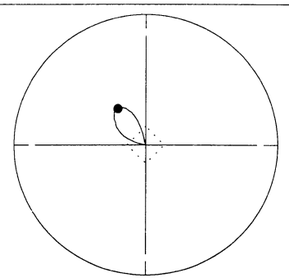

BURST LEVEL = 75%
R-Y DIRECTION ADJUSTABLE BY VR132
B-Y DIRECTION ADJUSTABLE BY VR133

Reference notes:

1. Connect equipments as shown in the above table.
2. Set the Viewer 34 cm distance in front of the camera.
3. Set the color bar chart in standard pattern frame of the Viewer.
4. Adjust VR132 and VR133 so that burst signal start form the center of the vector scope.

15. R-Y / B-Y Pedestal Adjustment

Test Point	Adj. Point	Mode	Input
TP109 (CA-Y+C) TP111 (GND) CAM OUT	VR108 (R-Y PED) VR106 (B-Y PED)	---	COLOR BAR CHART
Tape	M. EQ.	Spec.	
---	OSCILLOSCOPE VECTOR SCPOPE TV MONITOR VIEWER	SEE BELOW	

Connections of M. EQ.

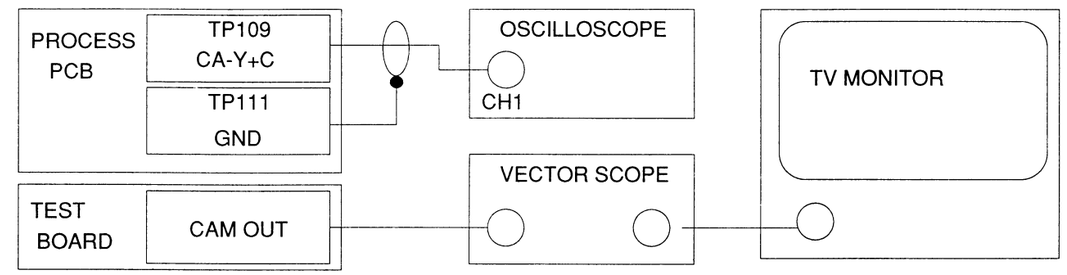

Figure

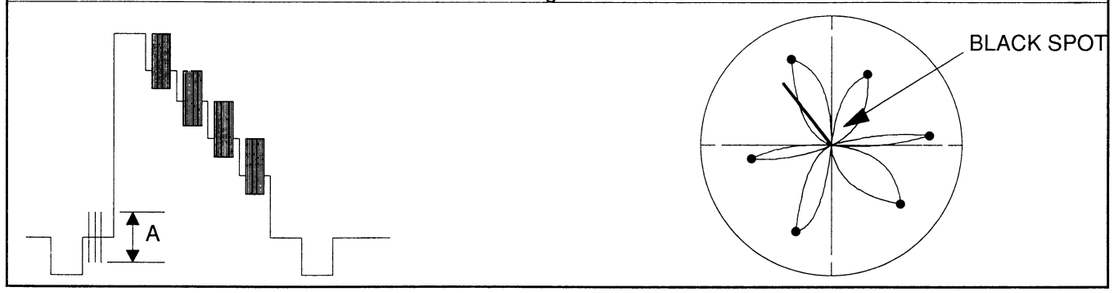

Reference notes:

1. Connect equipments as shown in the above table.
2. Set the Viewer 40 cm distance in front of the camera.
3. Set the color bar chart in standard pattern frame of the Viewer with black mask of the chart.
4. Adjust VR108 and VR106 for reading minimum level "A" on the oscilloscope, and confirm that the black spot (shown in figure) is shown on the center of the vector scope.
5. Confirm the FH2 / C-PED Adjustment is correct, and proceed the FH2 / C-PED Adjustment as required.

16. White Balance Pre-adjustment

Test Point	Adj. Point	Mode	Input
TP109 (CA-Y+C) TP111 (GND) CAM OUT	VR1001 (RWB) VR1002 (BWB)	---	COLOR BAR CHART
Tape	M. EQ.	Spec.	
---	OSCILLOSCOPE VECTOR SCOPE TV MONITOR VIEWER	SEE BELOW	

Connections of M. EQ.

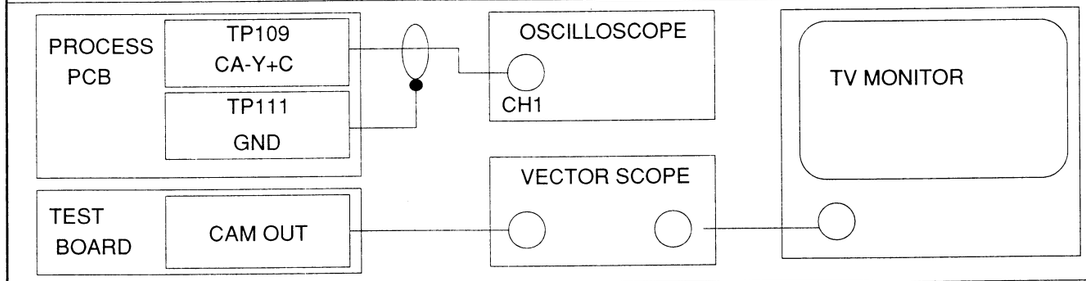

Figure

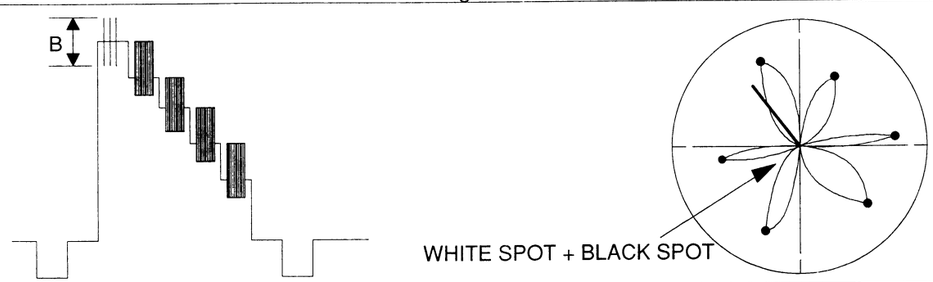

Note:
VR1001, VR1002 : Test Board

Reference notes:

1. Connect equipments as shown in the above table.
2. Set the Viewer 40 cm distance in front of the camera.
3. Set the color bar chart in standard pattern frame of the Viewer with black mask of the chart.
4. Adjust VR1001 and VR1002 on Test Board for reading minimum level "B" on the oscilloscope, and confirm that the white spot (shown in figure) is shown on the center of the vector scope.

17. FH2 / C-PED Adjustment

Test Point	Adj. Point	Mode	Input
CAM OUT	VR105 (FH2) VR104 (C-PED.)	---	---
Tape	M. EQ.	Spec.	
---	VECTOR SCOPE TV MONITOR	SEE BELOW	

Connections of M. EQ.

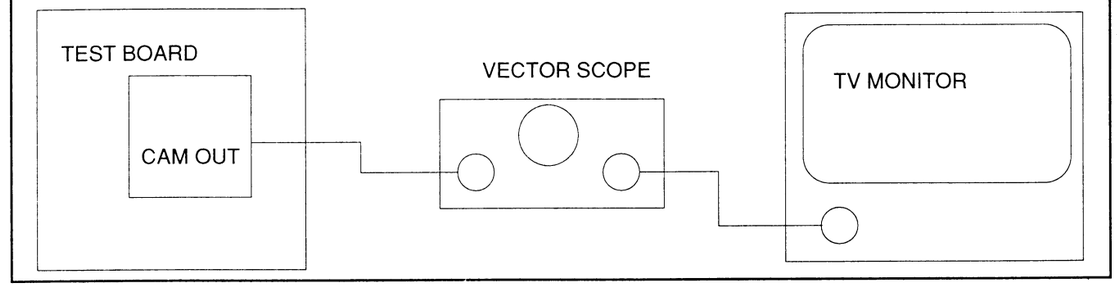

Reference notes:

1. Connect equipments as shown in the above table.
2. Set the Lens Cap on the camera.
3. Adjust VR105 and VR104 to be shown the black spot is on the center of the vector scope.
4. Confirm the R-Y / B-Y Pedestal Adjustment, and proceed the R-Y / B-Y Pedestal Adjustment as required.
5. Remove the Lens Cap ofter the Adjustment.

18. Color 2H Gain Adjustment

Test Point	Adj. Point	Mode	Input
CAM OUT	VR129 (C-2H)	---	COLOR BAR CHART
Tape	M. EQ.	Spec.	
---	VECTOR SCOPE TV MONITOR VIEWER	SEE BELOW	

Connections of M. EQ.

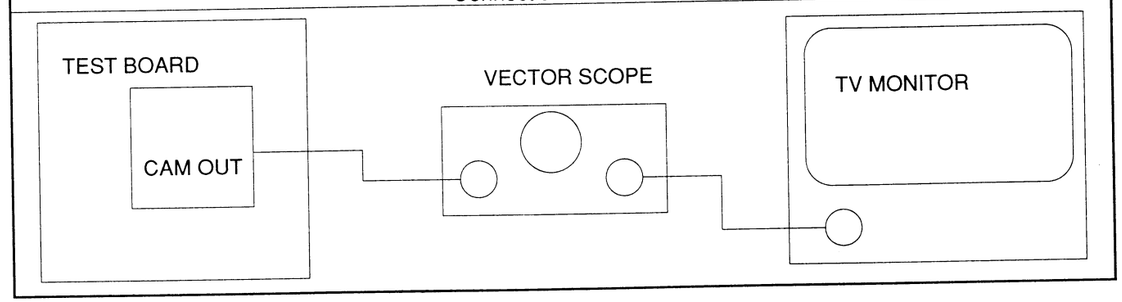

Reference notes:

1. Connect equipments as shown in the above table.
2. Set the Viewer 34 cm distance in front of the camera.
3. Set the color bar chart in standard pattern frame of the Viewer.
4. Adjust VR129 so that each 6 Color Spots are not shake.

19. White Balance Level B-Y / R-Y Adjustment

Test Point	Adj. Point	Mode	Input
TP113 (B-Y) TP114 (R-Y) TP111 (GND) TP109(CA-Y+C)	VR115 (W/B B-Y LEV.) VR114 (W/B R-Y LEV.)	---	COLOR BAR CHART
Tape	M. EQ.	Spec.	
---	OSCILLOSCOPE VIEWER	B-Y LEVEL: 150mV ±10mV R-Y LEVEL: 150mV ±10mV	

Connections of M. EQ.

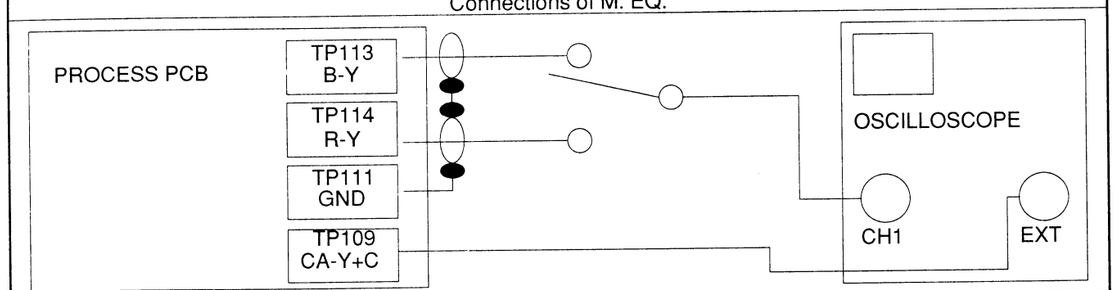

Figure

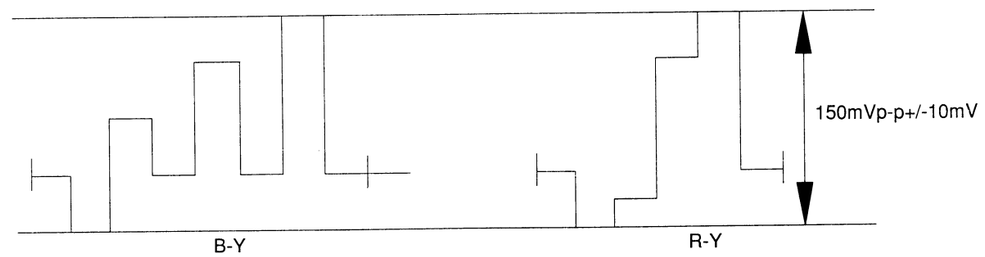

Reference notes:

1. Connect equipments as shown in the above table.
2. Set the Viewer 34 cm distance in front of the camera.
3. Set the color bar chart in standard pattern frame of the Viewer.
4. Adjust VR115 for reading 150mVp-p ±10mV on the oscilloscope.
5. Adjust VR114 for reading 150mVp-p ±10mV on the oscilloscope.

20. B-Y / R-Y Level Adjustment

Test Point	Adj. Point	Mode	Input
CAM OUT	VR109 (B-Y) VR110 (R-Y)	---	COLOR BAR CHART
Tape	M. EQ.	Spec.	
---	VECTOR SCOPE TV MONITOR VIEWER	SEE BELOW	

Connections of M. EQ.

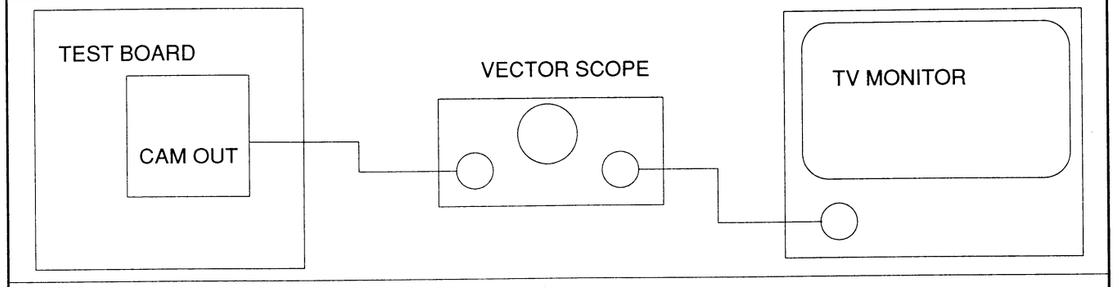

Figure

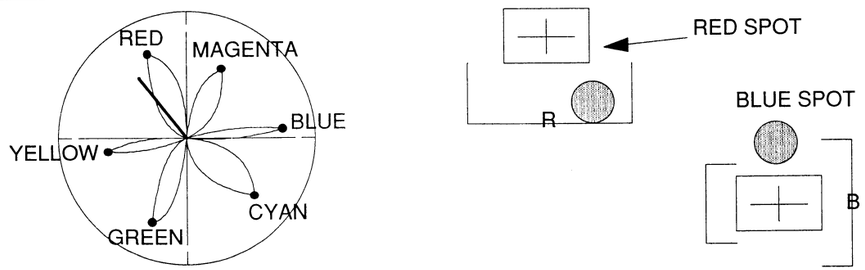

Reference notes:

1. Connect equipments as shown in the above table.
2. Set the Viewer 34 cm distance in front of the camera.
3. Set the color bar chart in standard pattern frame of the Viewer.
4. Adjust VR109 and VR110 to overlap each outer point of color Spots (especially RED and BLUE) on the adjustment spot.

21. Camera Y+C Level Adjustment

Test Point	Adj. Point	Mode	Input
TP109 (CA-Y+C) TP111 (GND)	VR120 (Y LEVEL)	---	GRAY SCALE CHART
Tape	M. EQ.	Spec.	
---	OSCILLOSCOPE VIEWER	2.0Vp-p ±0.05V	

Connections of M. EQ.

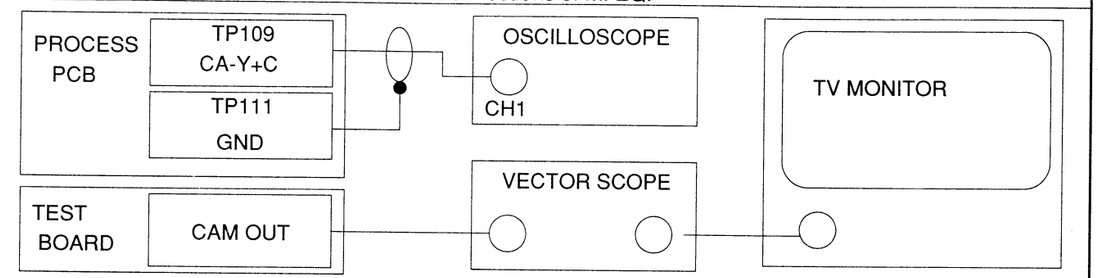

Figure

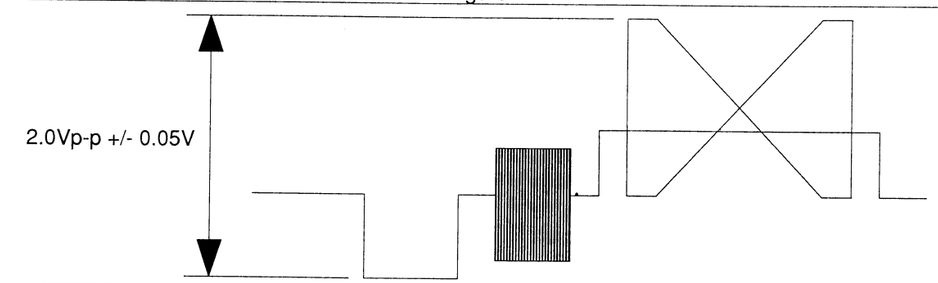

Reference notes:

1. Connect equipments as shown in the above table.
2. Set the Viewer 34 cm distance in front of the camera.
3. Set the gray scale in standard pattern frame of the Viewer.
4. Adjust VR120 for reading 2.0Vp-p ±0.05V on the oscilloscope.

22. Auto White Balance Off Set Adjustment

Test Point	Adj. Point	Mode	Input
CAM OUT	VR117 (W/B B-Y OFF SET) VR116 (W/B R-Y OFF SET)	---	GRAY SCALE CHART
Tape	M. EQ.	Spec.	
---	VECTOR SCOPE TV MONITOR VIEWER	SEE BELOW	

Connections of M. EQ.

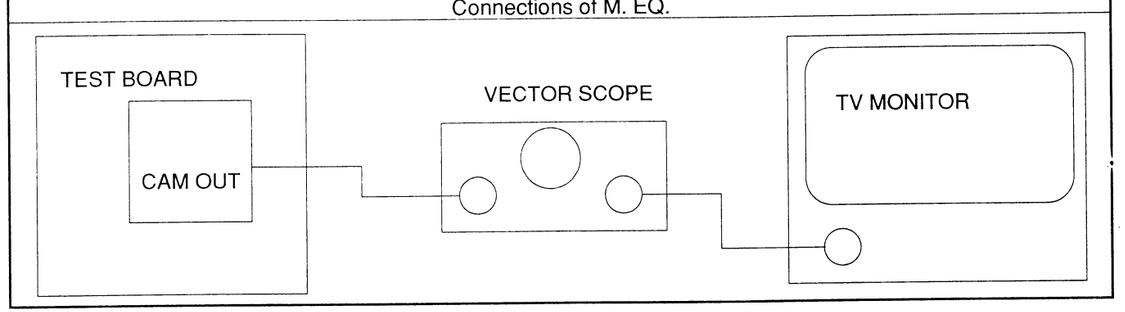

Reference notes:

1. Connect equipments as shown in the above table.
2. Set the Viewer 34 cm distance in front of the camera.
3. Set the gray scale chart in standard pattern frame of the Viewer.
4. Set WHITE BAL SW (SW1009) to auto position.
5. Adjust VR117 and VR116 to obtain the white Spot to center of vector scope.
6. Set the Lens Cap on the camera and confirm the black spot is shown on the center. If not, redo above procedure.

23. Blooming Adjustment

Test Point	Adj. Point	Mode	Input
CAM OUT	VR03 (BLOOMING)	---	FLUORESCENT LAMP
Tape	M. EQ.	Spec.	
---	VECTOR SCOPE TV MONITOR FLUORESCENT LAMP	SEE BELOW	

Connections of M. EQ.

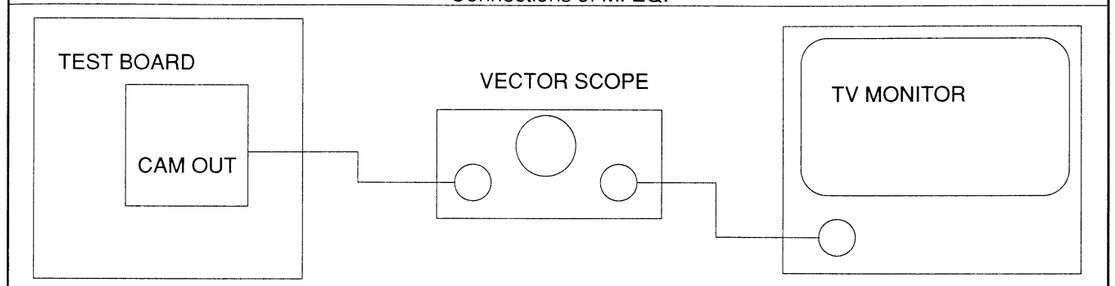

Figure

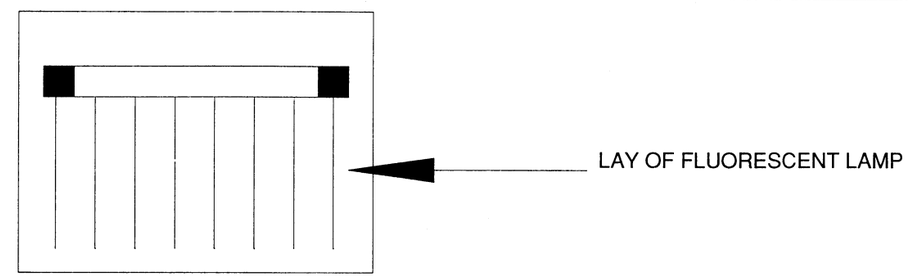

Reference notes:

1. Connect equipments as shown in the above table.
2. Set the 40W fluorescent lamp 4m distance in front of the camera.
3. Turn on the black light switch (SW1005).
4. Turn the VR03 toward the clockwise direction slowly until lay of the fluorescent lamp is stopped.

Notice: Do not turn the VR03 more than the maximum position.
Do not enter the interference light directly into the camera frame.

5. Turn off the Black Light Switch (SW1005) after adjustment.

24. Flange Back Adjustment

Test Point	Adj. Point	Mode	Input
CAM OUT	SCREW 2	---	SIMENF STAR CHART
Tape	M. EQ.	Spec.	
---	VECTOR SCOPE TV MONITOR	SEE BELOW	

Connections of M. EQ.

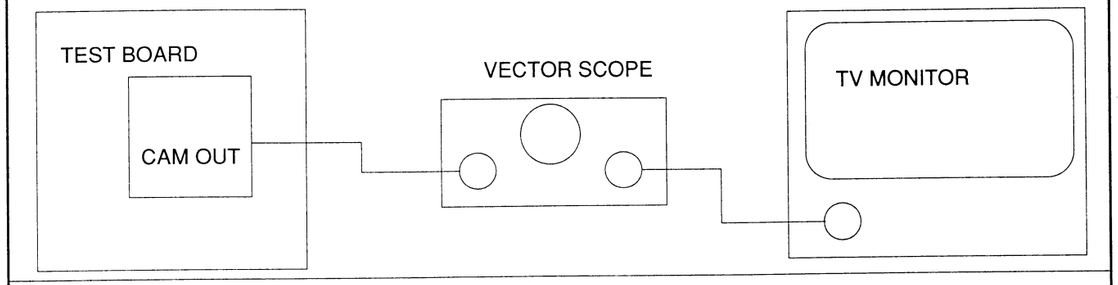

Figure

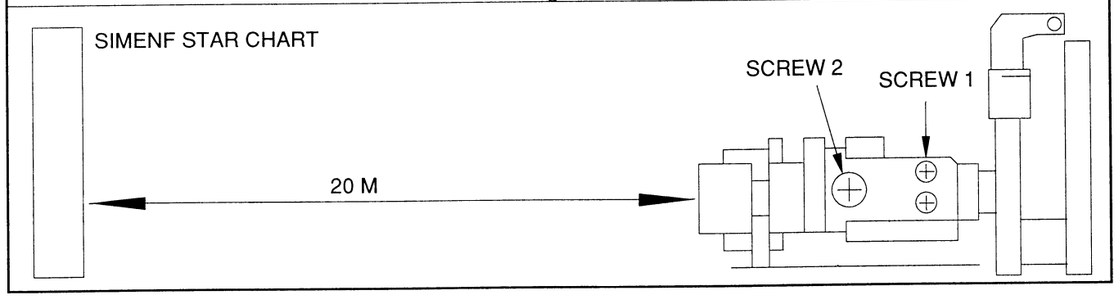

Reference notes:

1. Connect equipments as shown in the above table.
2. Set the Simenf Star Chart 20 m distance in front of the camera.
3. Set Focus Switch (SW1007) to Manual.
4. Loosen the screw 1.
5. Turn the Zoom Ring maximum toward Tele, and adjust the focus by turning the focus ring.
6. Turn the Zoom Ring maximum toward Wide, and adjust the focus by turning the screw 2.
7. Reconfirm the step 5 and 6.
8. Tighten the screw 1.

VIDEO ELECTRICAL ADJUSTMENT

How to Set Up the EE Mode (Signal input from Pattern Genrator and Audio Oscillator)

1. Connect the TV monitor to Video Out(JK531) and Audio Out(JK531) on Main PCB.
2. Connect the Pattern Generator to JK1004.
3. Connect the Audio Oscillator through the Attenator to JK1006.
4. Connect connectors of Video Main PCB to the test board as following:

PCB	Connector's name	Connector on test board
Video Main PCB	CL-10	CL-10-A
Video Main PCB	CN-03	CN-3-A
Servo/Sys-con PCB	CL-19	CL-19-A
Servo/Sys-con PCB	CL-18	CL-18-A

5. Connect the EVF Unit Assembly to CN-2 (Main PCB).
6. Set switches as follows:

Switch No.	Switch's name	Select position
SW1001	CAMERA/VTR	VTR
SW1010	CAMERA/VTR	VTR
SW1004	CAMERA/TEST	TEST
SW1043	SOFT/DIGITAL	DIGITAL

7. Depress SW1020 for Power On.

DC/DC Converter Voltage Adjustment

Test Point	Adj. Point	Mode	Input
TP331 (5V ADJ) TP503 (GND)	VR331 (5V ADJ)	E-E	---
Tape	M. EQ.	Spec.	
---	DC VOLTMETER	5.0V ±0.05V	

Connections of M. EQ.

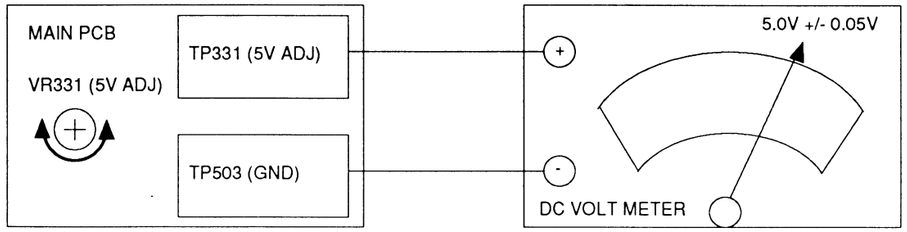

Reference Notes:

1. Connect equipments as shown in the above table.
2. Adjust VR331 for reading 5.0V ±0.05V between TP331 and TP503 on the DC Voltmeter.

DC/DC Converter Frequency Adjustment

Test Point	Adj. Point	Mode	Input
TP332 (5V FREQ) TP503 (GND)	VR332 (5V FREQ)	E-E	---
Tape	M. EQ.	Spec.	
---	OSCILLOSCOPE FREQUENCY COUNTER	304.6875KHZ ± 2.0KHZ	

Connections of M. EQ.

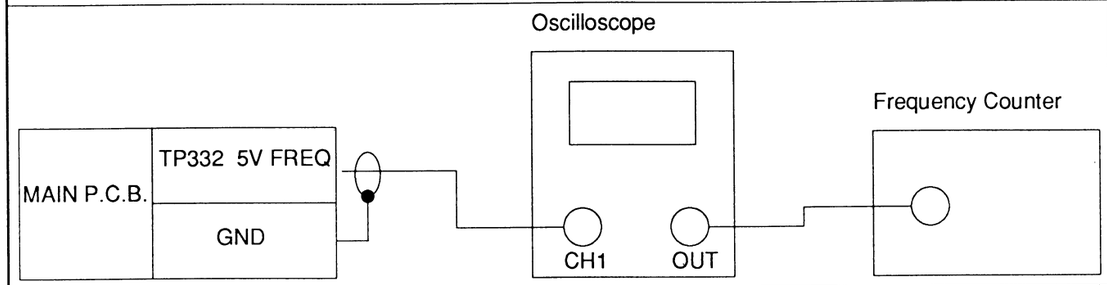

Figure

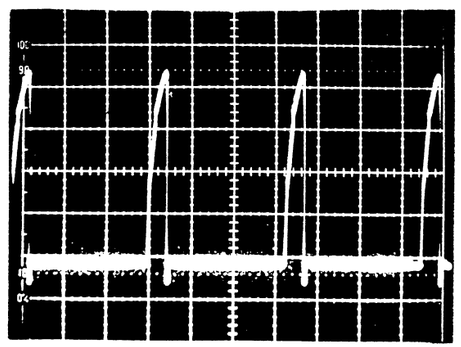

Reference notes:

1. Connect equipments as shown in the above table.
2. Adjust VR332 for reading 304.6875KHz ± 2.0KHz on the frequency counter.

AGC Level Adjustment

Test Point	Adj. Point	Mode	Input
TP302 (AGC) TP503 (GND)	VR301 (AGC)	E-E	COLOR BAR W/IQ
Tape	M. EQ.	Spec.	
---	TEST BOARD PATTERN GENERATOR OSCILLOSCOPE	0.5Vp-p ±0.02Vp-p	

Connections of M. EQ.

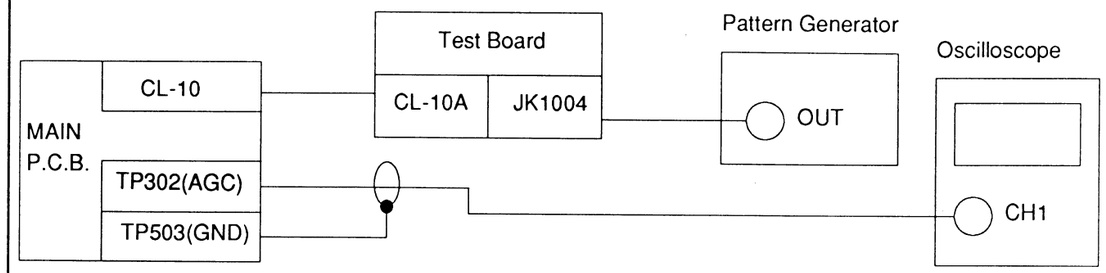

Figure

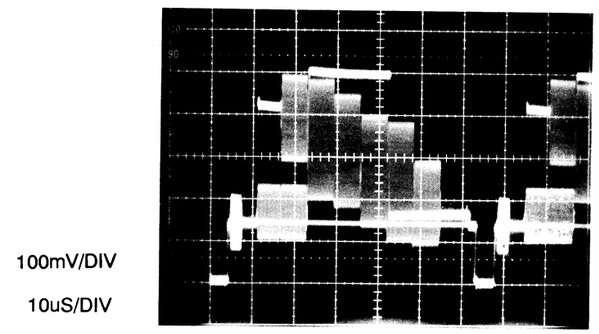

Reference notes:

1. Connect equipments as shown in the above table.
2. Inject the color bar with white 100% to Video In (JK1004).
3. Adjust VR301 so that AGC level becomes 0.5Vp-p ±0.02V.

Emphasis Level Adjustment

Test Point	Adj. Point	Mode	Input
TP357 (EMP) TP503 (GND)	VR353 (EMP)	E-E	COLOR BAR W/IQ
Tape	M. EQ.	Spec.	
---	TEST BOARD PATTERN GENERATOR OSCILLOSCOPE	0.5Vp-p ±0.02Vp-p	

Connections of M. EQ.

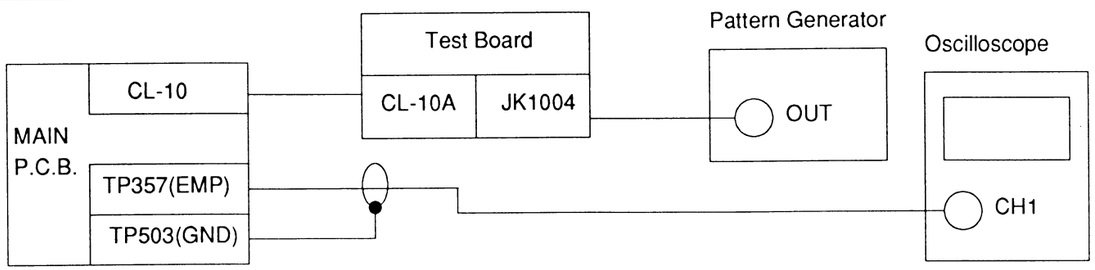

Figure

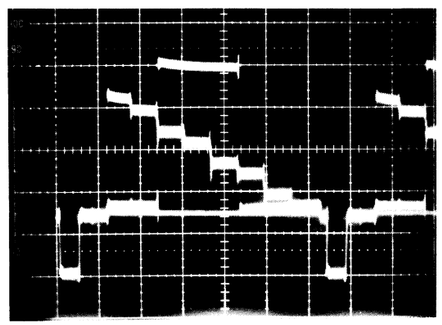

Reference notes:

1. Connect equipments as shown in the above table.
2. Inject the color bar with 100% white to Video In (JK1004).
3. Adjust VR353 so that the emphasis level becomes 0.5Vp-p ±0.02V.

Y/C Sepa. Adjustment

Test Point	Adj. Point	Mode	Input
TP354 (W/D) TP503 (GND)	VR351 (Y/C SEP)	E-E	COLOR BAR W/IQ
Tape	M. EQ.	Spec.	
---	TEST BOARD PATTERN GENERATOR OSCILLOSCOPE	COLOR LEVEL MINIMUM	

Connections of M. EQ.

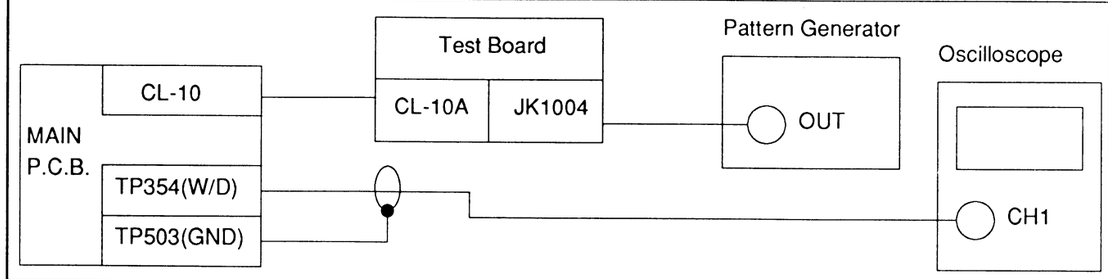

Figure

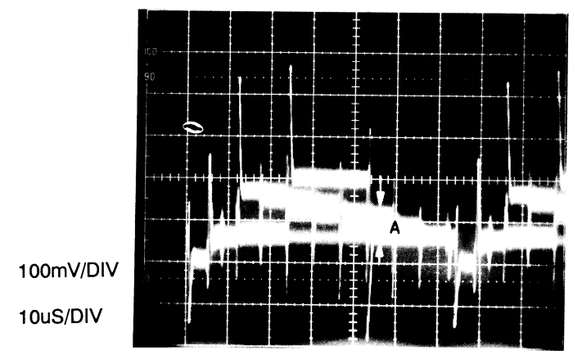

Reference notes:

1. Connect equipments as shown in the above table.
2. Inject the color bar with 100% white to Video In (JK1004).
3. Adjust VR351 to get the minimum level of color "A" at TP 354.

W/D Clip

Test Point	Adj. Point	Mode	Input
TP354 (W/D) TP503 (GND)	---	E-E	COLOR BAR W/IQ
Tape	M. EQ.	Spec.	
---	TEST BOARD PATTERN GENERATOR OSCILLOSCOPE	W/CLIP: 220±10% D/CLIP: 100±10%	

Connections of M. EQ.

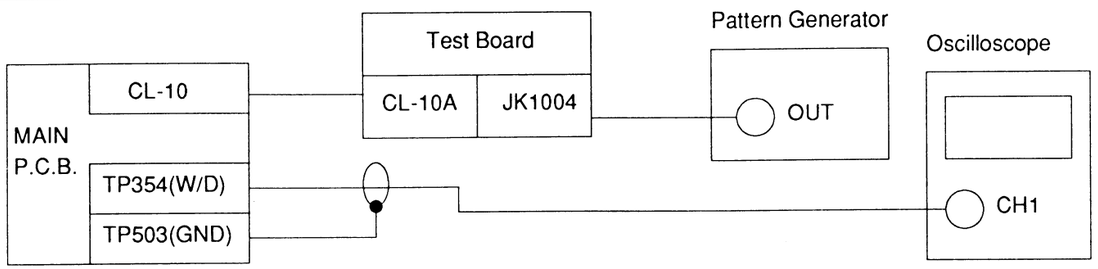

Figure

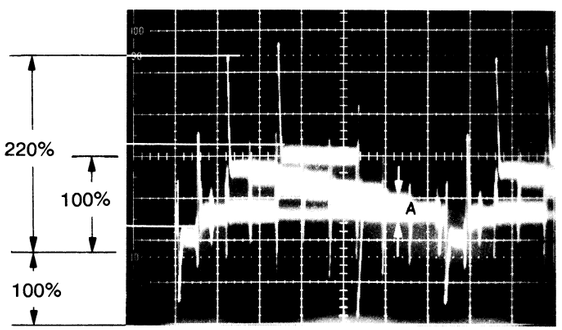

Reference notes:

1. Connect equipments as shown in the above table.
2. Inject the color bar with white 100% to Video In (JK1004).
3. Confirm the white clip level and dark clip level as shown in above.

Burst Flag Pulse Adjustment

Test Point	Adj. Point	Mode	Input
TP502 (REC-C) TP356 (BF) TP503 (GND)	VR352 (BF)	E-E	COLOR BAR W/IQ
Tape	M. EQ.	Spec.	
---	TEST BOARD PATTERN GENERATOR OSCILLOSCOPE	SEE BELOW	

Connections of M. EQ.

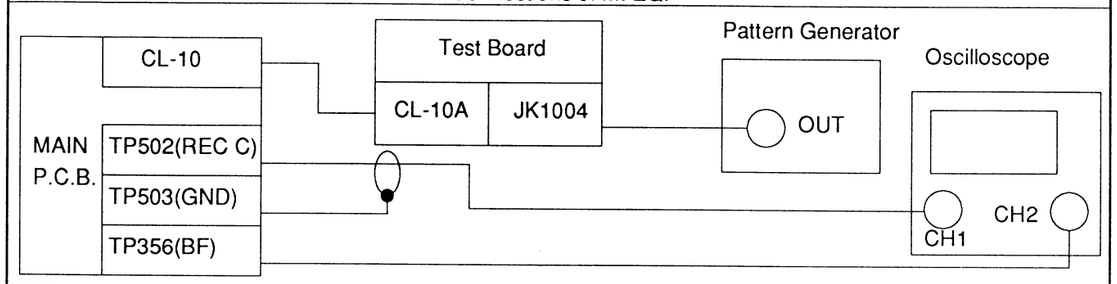

Figure

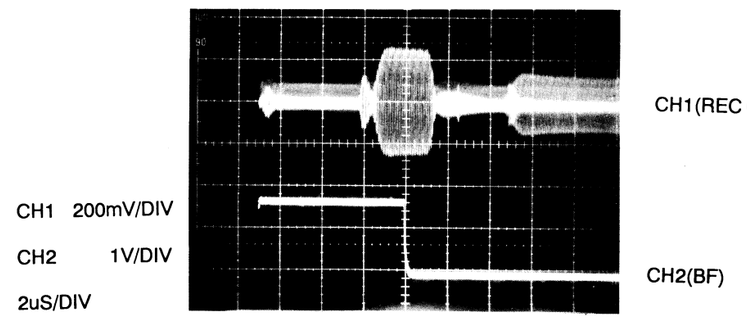

Reference notes:

1. Connect equipments as shown in the above table.
2. Inject the color bar with white 100% to Video In (JK1004).
3. Set the trigger of oscilloscope to CH2 (+).
4. Adjust VR352 so that the center of color burst (TP502) aligns to the decline point of the burst flag pulse (TP356).

Luminance Carrir Set / Deviation Adjustment

Test Point	Adj. Point	Mode	Input
TP501 (REC-Y) TP503 (GND)	VR355 (CARR) VR354 (DEV)	E-E	COLOR BAR W/IQ
Tape	M. EQ.	Spec.	
---	TEST BOARD PATTERN GENERATOR OSCILLOSCOPE SPECTRUM ANALYZER	CARR : 4.2MHz ± 40KHz DEV : 1.2MHz ± 40KHZ	

Connections of M. EQ.

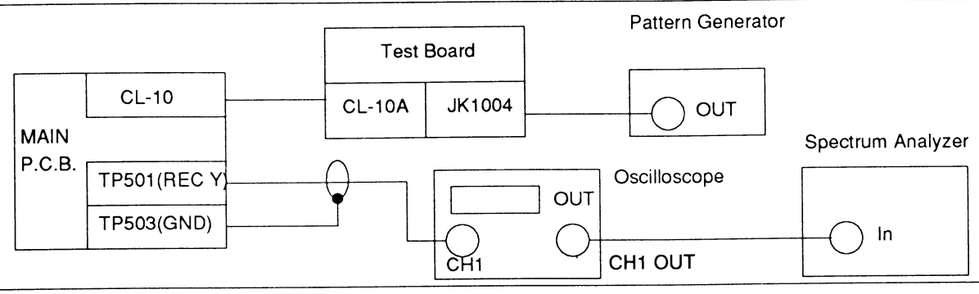

Figure

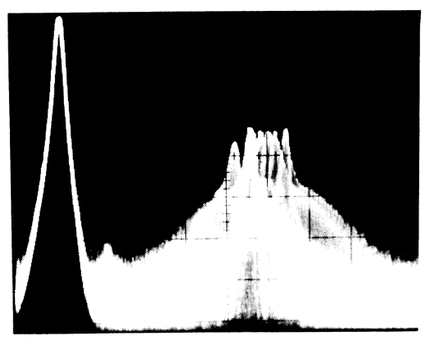

F•SPAN 10MHz
RBW 100KHz
ST 10mS

Reference notes:

1. Connect equipments as shown in the above table.
2. Inject the color bar with white 100% to Video In (JK1004).
3. Adjust VR355 so that Sync Tip Frequency becomes 4.2MHz ±40KHz.
4. Adjust VR354 so that White Peak Frequency becomes 5.4MHz ±40KHz.

FM Audio Carrir Set /Deviation Adjustment

Test Point	Adj. Point	Mode	Input
TP451(REC AFM) TP503(GND)	VR452 (A CARR) VR453 (A DEV)	E – E	NO SIGNAL – 65dB 1K
Tape	M.EQ.	Spec.	
– – – – – –	TEST BOARD AUDIO OSC ATT OSCILLOSCOPE SPECTRUM ANALYZER	A CARR: 41.5MHz ±20KHz A DEV: 120MHz ±20KHz	

Connection of M. EQ.

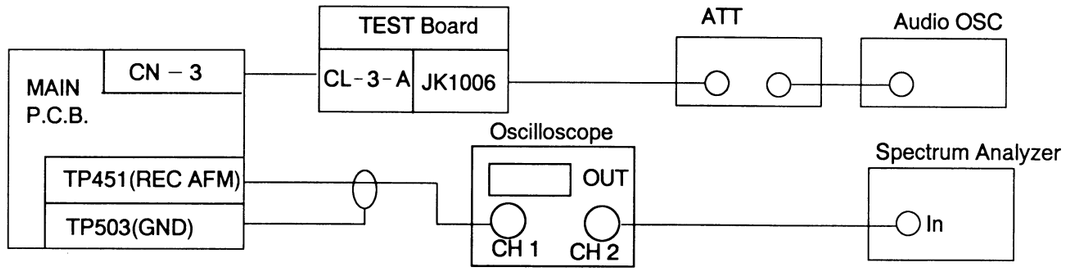

Figure

F•SPAN 0.5MHz
RBW 30KHz
S/T 0.1 Sec

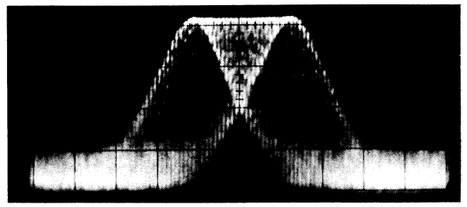

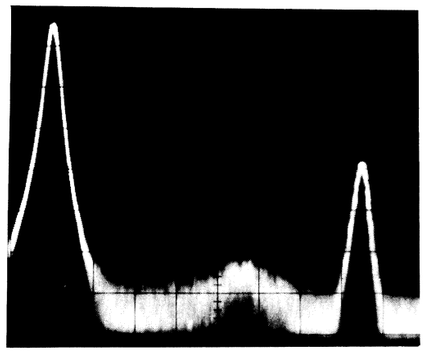

reference note:

1. Connect equipments as shown in the above table.
2. Inject the non-audio signal to Audio In (JK1006).
3. Adjust VR452 so that FM Audio Carrier Frequency becomes 1.5MHz ±20KHz.
4. Inject 1KHz Audio Signal (-65dBv) to Audio In (JK1006).
5. Adjust VR453 so that FM Audio Sigal becomes 120KHz ±20KHz.

How to Setup the Play Mode

1. Connect equipments same connection as E-E mode.
2. Set the SW1010 (CAMERA/VTR) to VTR.
3. Insert a playback tape.
4. Depress the SW1022 (PLAY) to playback.
5. Depress the SW1025 (STOP) to stop .
6. Set the SW1043 (SOFT/DIGITAL) to DIGITAL.

PB Switching Point Adjustmennt

Test Point	Adj. Point	Mode	Input
TP353 (V-OUT) TP503 (GND) TP355 (RF-SW)	VR526(SWP)	PLAYBACK	TEST TAPE
Tape	M. EQ.	Spec.	
FM6A	OSCILLOSCOPE	7.0H ±0.5H	

Connections of M. EQ.

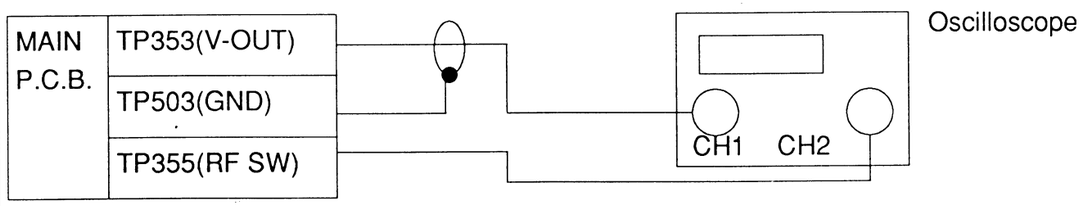

Figure

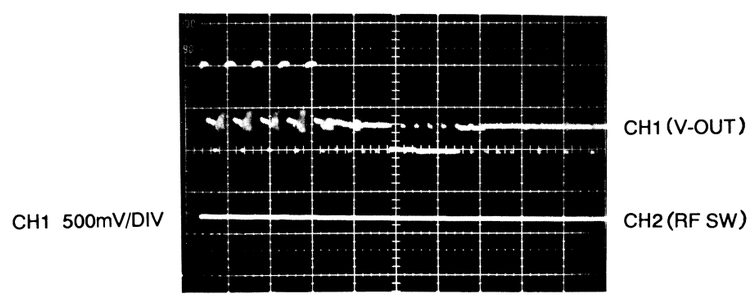

Reference note:

1. Connect equipments as shown in the above table.
2. Set the trigger of oscilloscope to CH2 (+) trigger.
3. Playback the test tape FM6A and adjust VR526 so that the front edge of V-sync (CH1) delays 7.0 ±0.5H from rising point of RF SW Pulse (CH2).

Capstan LP Adjustment

Test Point	Adj. Point	Mode	Input
TP527 (ATF ERR) TP503 (GND) TP355 (RF-SW)	VR529 (C-LP)	PLAYBACK	TEST TAPE
Tape	M. EQ.	Spec.	
FM6AL	OSCILLOSCOPE	SEE BELOW	

Connections of M. EQ.

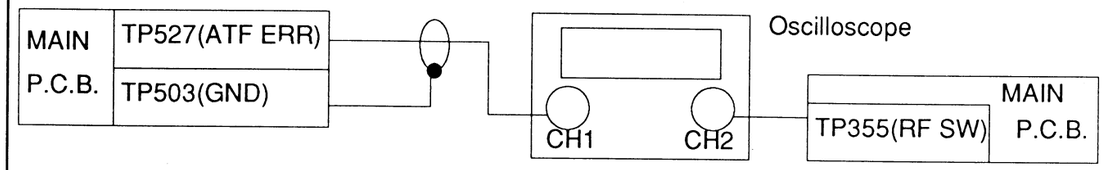

Figure

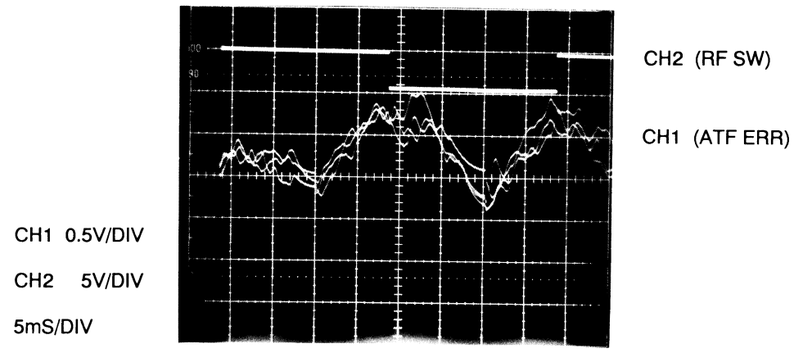

Reference notes:

1. Connect equipments as shown in the above table.
2. Playback the test tape FM6AL.
3. Adjust VR529 for reading 2.4V DC level as shown in the above.

Capstan SP Adjustment

Test Point	Adj. Point	Mode	Input
TP527 (ATF ERR) TP503 (GND) TP355 (RF-SW)	VR528 (C-SP)	PLAYBACK	TEST TAPE
Tape	M. EQ.	Spec.	
FM6A	OSCILLOSCOPE	SEE BELOW	

Connections of M. EQ.

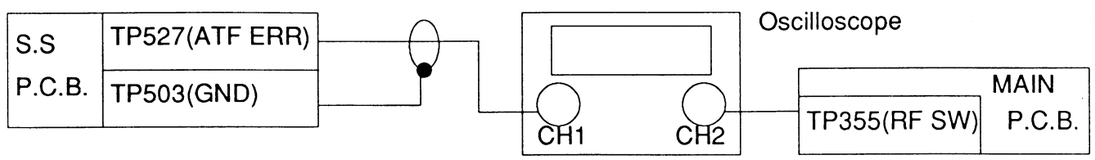

Figure

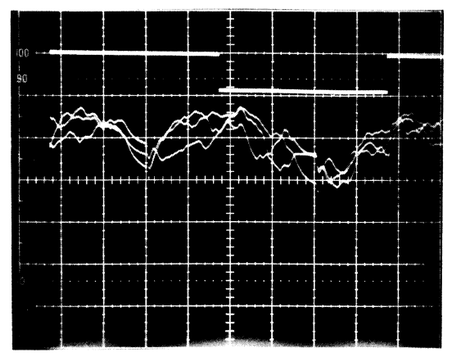

Reference notes:

1. Connect equipments as shown in the above table.
2. Playback the test tape FM6A.
3. Adjust VR528 for reading 2.4V DC level as shown in the above.

ATF Balance Adjustment

Test Point	Adj. Point	Mode	Input
TP505(ENV) TP504(GND) TP355 (RF-SW)	VR525 (ATF BAL)	PLAYBACK	TEST TAPE
Tape	M. EQ.	Spec.	
FM6A	OSCILLOSCOPE	MAXIMUM	

Connections of M. EQ.

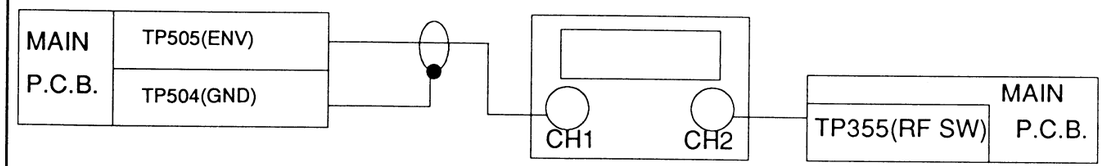

Figure

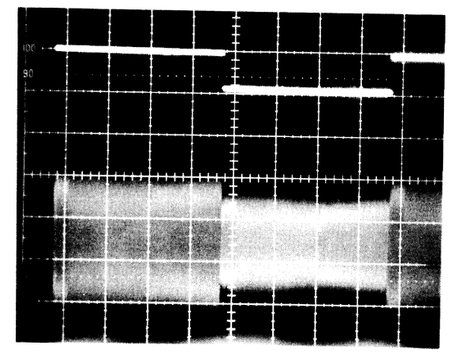

Reference notes:

1. Connect equipments as shown in the above table.
2. Playback the test tape FM6A.
3. Adjust VR525 so that the output level of PB-RF becomes maximum.
4. Confirm Capstan LP/SP adjustment and redo as required.

SP/LP Detector Adjustment

Test Point	Adj. Point	Mode	Input
TP526 (DOC-DC) TP525 (C-SP/LP) TP503 (GND)	VR527(C – SP/LP)	PLAYBACK	TEST TAPE
Tape	M. EQ.	Spec.	
FM6AL	DC VOLTMETER	SEE BELOW	
Connections of M. EQ.			

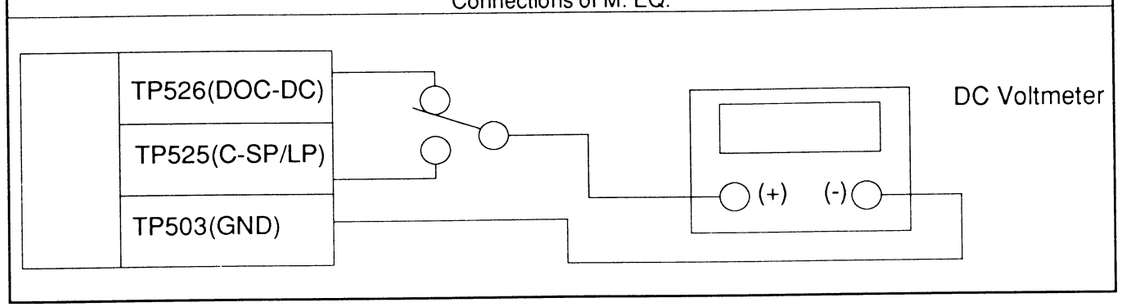

Reference notes:

1. connect equipments as shown in the above table.
2. Playback the test tape FM6AL under CUE mode and read the DC voltage at TP526 (Vcue).
3. Playback the test tape FM6AL under REV mode and read the DC voltage at TP526 (Vrev).
4. Compareing Vcue with Vrev, check the lower voltage (Vlower), then adjust VR527 so that DC voltage at TP525 becomes 0.7V less than Vlower.

PB Level Adjustment

Test Point	Adj. Point	Mode	Input
TP352 (CCD1) TP503 (GND)	VR356 (CCD1)	PLAYBACK	TEST TAPE
Tape	M. EQ.	Spec.	
FM6A	OSCILLOSCOPE	0.5Vp-p ±0.02V	
Connections of M. EQ.			

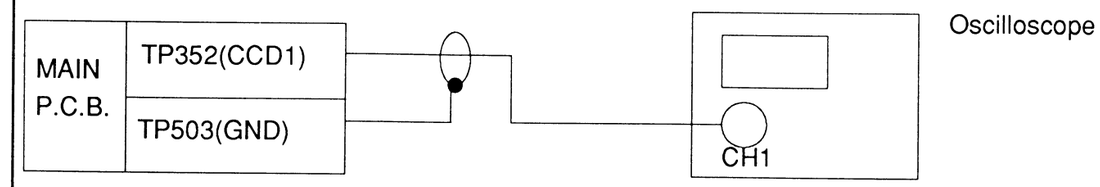

Figure

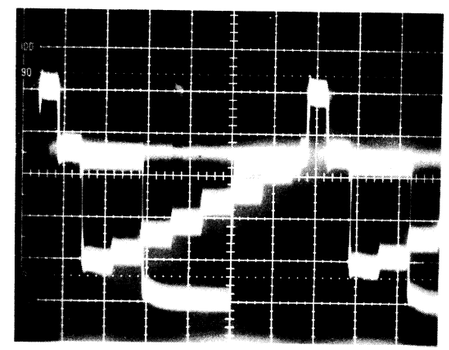

Reference notes:

1. Connect equipments as shown in the above table.
2. Playback the test tape FM6A and adjust VR356 so that the playback level becomes 0.5Vp-p ±0.02V.

PB Level Confirmation

Test Point	Adj. Point	Mode	Input
TP353 (V-OUT) TP503 (GND)	---	PLAYBACK	TEST TAPE
Tape	M. EQ.	Spec.	
FM6A	OSCILLOSCOPE	1.0Vp-p ±0.05V	

Connections of M. EQ.

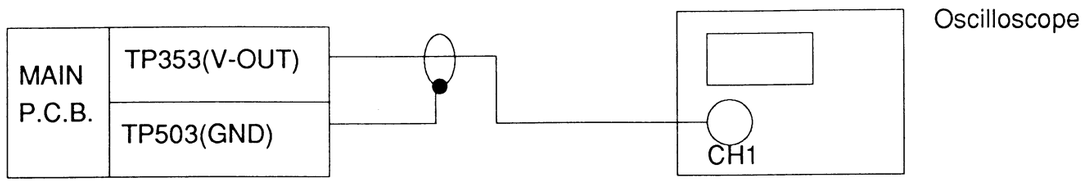

Figure

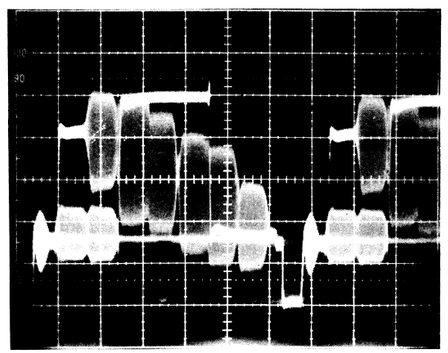

Reference notes:

1. Connect equipments as shown in the above table.
2. Playback the test tape FM6A and confirm the playback level is 1.0Vp-p ±0.05V.

Chroma Emphasis Freq. Adjustment

Test Point	Adj. Point	Mode	Input
JK531 (AV JACK)	T352	PLAYBACK	TEST TAPE
Tape	M. EQ.	Spec.	
FM6A	VECTOR SCOPE TV MONITOR	MINIMUM	

Connections of M. EQ.

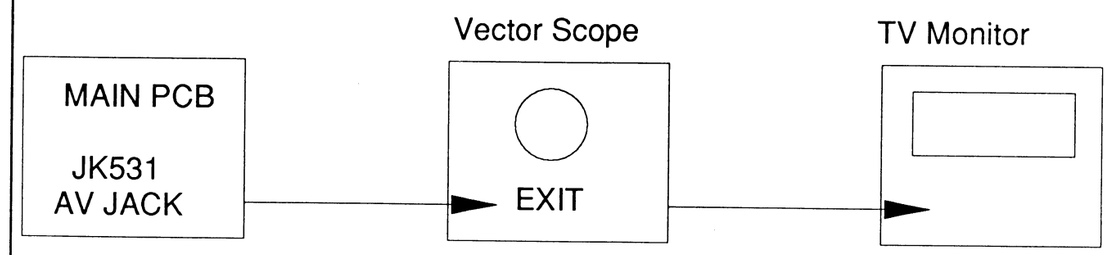

Figure

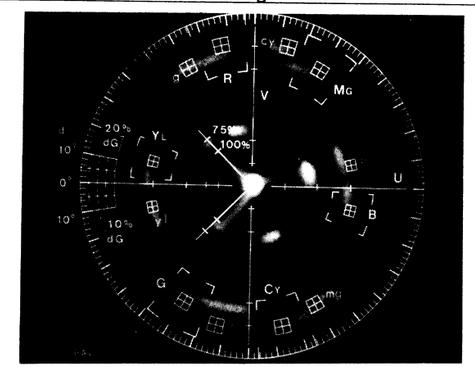

Reference notes:

1. Connect equipments as shown in the above table.
2. Playback the test tape FM6A.
3. Adjust T352 so that the spot showing on center of the Vector Scope becomes minimum.

FSC Adjustment

Test Point	Adj. Point	Mode	Input
JK531 (AV JACK) TP351 (4.43M)	VR532 (FSC)	PLAYBACK	TEST TAPE
Tape	M. EQ.	Spec.	
FM6EL	VECTOR SCOPE TV MONITOR	SEE BELOW	

Connections of M. EQ.

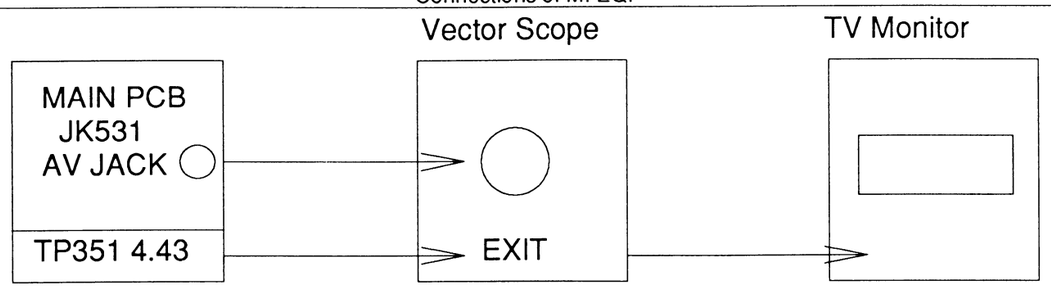

Figure

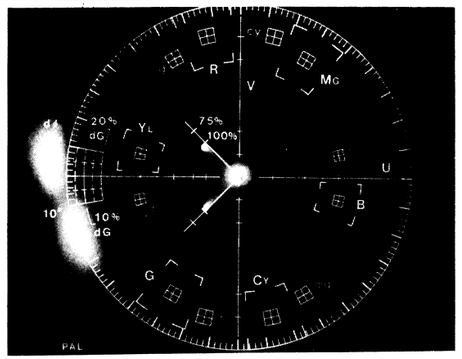

Reference notes:

1. Connect equipments as shown in the above table.
2. Playback the test tape FM6EL .
3. Set trigger mode of the Vector Scope to EXIT and PAL.
4. Adjust the Phase Volume on the Vector Scope.
5. Depress the STILL key until the noisebar is shown on TV screen.
6. Adjust **VR532** to overlap each color spots in one on the Vector Scope.

APC Adjustment

Test Point	Adj. Point	Mode	Input
JK531 (AV JACK) TP351 (4.43M)	VR531 (APC)	PLAYBACK	TEST TAPE
Tape	M. EQ.	Spec.	
FM6EL	VECTOR SCOPE TV MONITOR	SEE BELOW	

Connections of M. EQ.

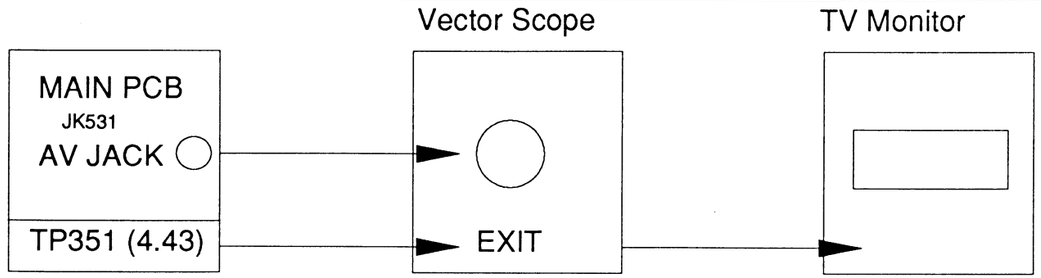

Figure

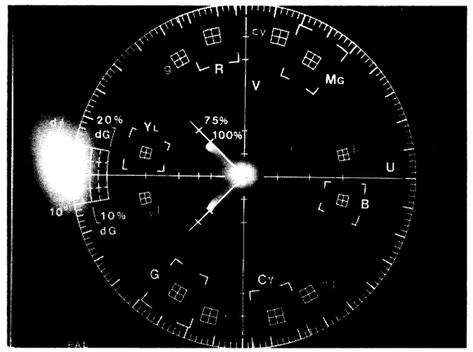

Reference Note:

1. Connect equipments as shown in the above table.
2. Playback the test tape.
3. Set the Vector Scope trigger mode to EXIT and PAL.
4. Adjust the FHASE VOLUME on Vector Scope.
5. Depress the STILL key until the noisebar is shown on TV screen.
6. Adjust VR531 so that each color spot are overlap on the Vector scope.

How to Setup the Rec Mode (On put signal from Pattern Generator and Audio Oscillator)

1. Connect equipments same connection as E-E mode.
2. Set the SW1010 (CAMERA/VTR) to camera.
3. Insert a blank tape.
4. Select the recording tape speed by SW1037 (SP/LP).
5. Depress the SW1031 for recording.
6. Depress the SW1031 for stop recording.

Set the SW1043 (SOFT/DIGITAL) to digital.Rec Luminance Current Adjustment

Test Point	Adj. Point	Mode	Input
TP353(V-OUT) TP708(CH1F) TP710(GND) TP355(RF-SW)	VR501(REC Y)	REC/SP	RED RASTER
Tape	M.EQ.	Spec.	
BRANK TAPE	TEST BOARD PATTERN GENERATOR OSCILLOSCOPE	200mV ± 5mV	

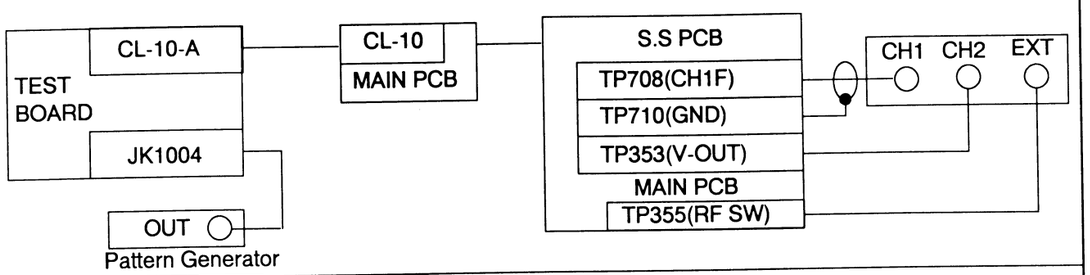

Figure

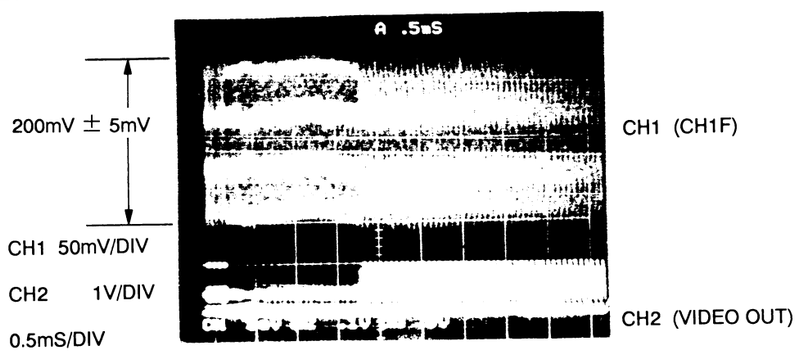

Reference notes:

1. Connect equipments as shown in the above figure.
2. Inject the Red Raster to Video In (JK1004).
3. Adjust VR501 so that REC-Y current becomes 200mV ±5mV.

Rec. Chroma Current Adjustment

Test Point	Adj. Point	Mode	Input
TP708 (CH1 F) TP710 (GND) TP355 (RF-SW)	VR502 (REC C)	REC/SP	RED RASTER
Tape	M. EQ.	Spec.	
BRANK TAPE	TEST BOARD PATTERN GENERATOR OSCILLOSCOPE SPECTRUM ANALYZER	Y -11dB ± 1dB	

Connections of M. EQ.

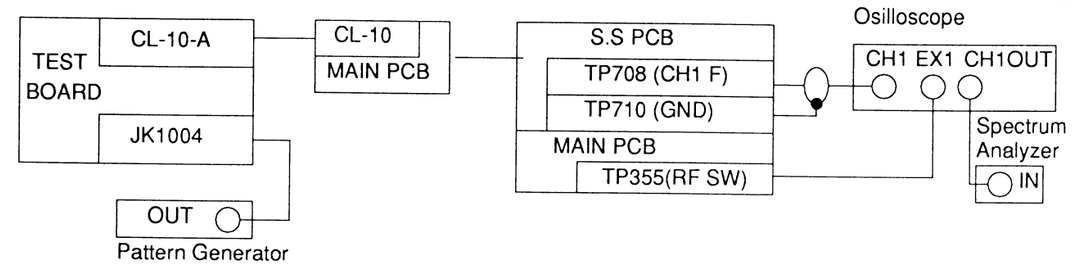

Figure

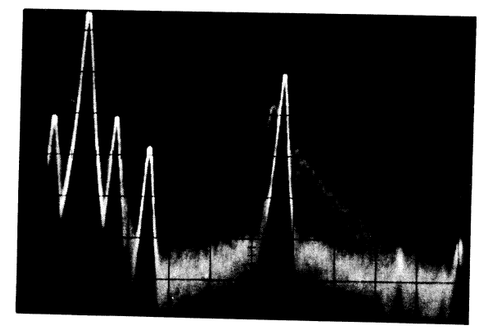

Reference notes:

1. Connect equipments as shown in the above table.
2. Set the Spectrum Amalyzer as following range.

Freq. Span	RBW	Sweep Time
10MHz	100KHz	10m sec

3. Input the Red Raster from Video In (JK1004).
4. Adjust VR502 so that REC C current level becomes 11dB lower than Red Carrir level.

Rec. AFM Current Adjustment

Test Point	Adj. Point	Mode	Input
TP708 (CH1 F) TP710 (GND) TP355 (RF SW)	VR451 (REC AFM)	REC/SP	RED RASTER
Tape	M. EQ.	Spec.	
BRANK TAPE	TEST BOARD PATTERN GENERATOR OSCILLOSCOPE SPECTRUM ANALYZER	C -12dB ± 1dB	

Connections of M. EQ.

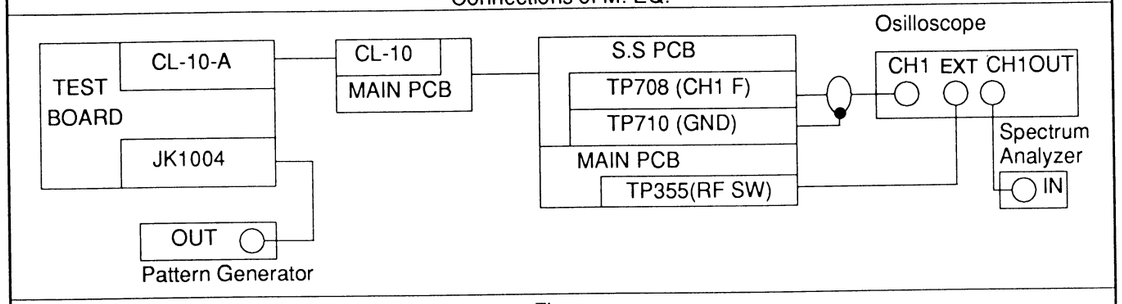

Figure

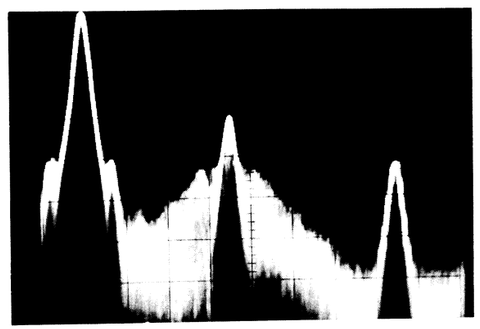

Reference notes:

1. Connect equipments as shown in the above table.
2. Set the Spectrum Analyzer as following level.

Freq. Span	RBW	SCAN Time
2MHz	30KHz	0.1 sec

3. Inject Red Raster to Video In (JK1004).
4. Adjust VR451 so that REC AMF current lever becomes 12dB lower than the REC C current.

How to Set Up the Rec Mode (Input signal from preadjusted Camera)

1. Disconnect CN-10 from the Camera PCB.
2. Disconnect CL-10 from the Main PCB.
3. Do all connectors on CAMERA PCB to Main PCB.

Camera PCB	Main PCB
CN-10	CL-10

4. Set the switch position as follows:

Switch No.	Switch name	Select position
SW1001	TV/TP	TV
SW1004	CAMERA/TEST	CAMERA
SW1010	CAMERA/VTR	VTR
SW1009	WHITE BALANCE	AUTO
SW1043	SOFT/DIGITAL	DIGITAL
SW1007	FOCUS M/A	A
SW1008	1/1000 ON/OFF	OFF

5. Set the recording tape speed by SW1037 (SP/LP).
6. Depress the SW1031 for recording.
7. Depress the SW1031 again for stop the recording.

Battery Down Adjustment

Test Point	Adj. Point	Mode	Input
BATTERY TERMINAL	VR333 (B. CHK)	REC/SP	CAMERA
Tape	M. EQ.	Spec.	
BRANK TAPE (MP)	DC VOLTMETER	5.60V +0.05V-0V	

Connections of M. EQ.

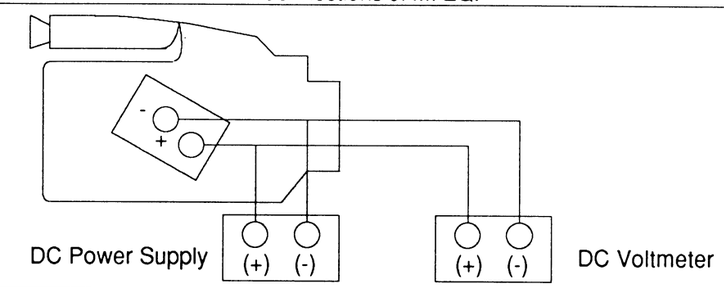

Reference notes:

1. Connect equipments as shown in the above table.
   (Connect the power supply directly to battery terminals.)
2. Turn VR333 fully clockwise.
3. Set the power supply output voltage to 5.60V +0.05/-0V.
4. Adjust VR333 slowly to counterclockwise direction until the unit turn off.

EVF ELECTRICAL ADJUSTMENT

Note:
All adjustment procedures must be proceeded in order of numberring.

1. Brightness adjustment

Test Point	Adj. Point	Mode	Input
EVF MONITOR	VR804	PLAYBACK	MONOSCOPE
Tape	M. EQ.	Spec.	
FM6M	---	SEE BELOW	
Figure			

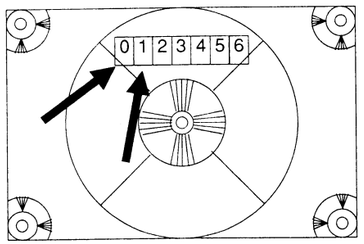

Reference notes:

1. Playback the test tape.
2. Adjust VR804 to obtain the black level of area 0 and 1 are same.

2. Centering Adjustment

Test Point	Adj. Point	Mode	Input
EVF MONITOR	RING A RING B	PLAYBACK	MONOSCOPE
Tape	M. EQ.	Spec.	
FM6M	---	SEE BELOW	
Figure			

Reference notes:

1. Playback the test tape.
2. Adjust the Ring A and Ring B alternately so that the largest circle of the monoscope is shown on the center of EVF.
3. Fix the Ring A and Ring B by Silicon Glue.

3. Vertical Size Adjustment

Test Point	Adj. Point	Mode	Input
EVF MONITOR	VR802	PLAYBACK	MONOSCOPE
Tape	M. EQ.	Spec.	
FM6M	---	SEE BELOW	
Figure			

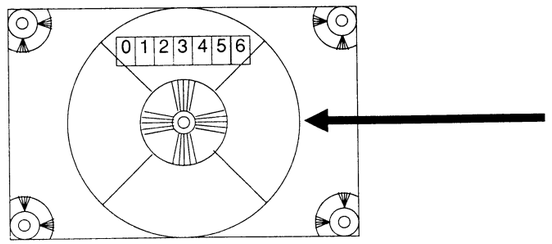

Reference notes:

1. Playback the test tape.
2. Adjust VR802 so that the largest circle of the monoscope becomes perfect circle.

4. Focus Adjustment

Test Point	Adj. Point	Mode	Input
EVF MONITOR	VR803	PLAYBACK	MONOSCOPE
Tape	M. EQ.	Spec.	
FM6M	---	SEE BELOW	
Figure			

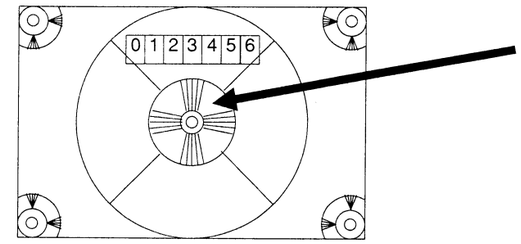

Reference notes:

1. Playback the test tape.
2. Adjust VR803 to get the best focus using the area showning by arrow.

TROUBLESHOOTING GUIDE

STEP 1

Press the FUNCTION switch.

STEP 2

Press the EJECT switch to open the cassette holder.

STEP 3

Press the FUNCTION switch.
Check the CAMERA LED ON.

STEP 4

Insert the cassette tape.

STEP 5

Check the camera picture on EVF.

STEP 6

Press the tape counter RESET and MEMORY.

STEP 7

Set the TAPE SPEED to SP mode.

STEP 8

Press DATE/HOUR switch once.
Adjust date and hour using by SET and ADJUST switches.

STEP 9

Press the TITLE switch.
Adjust title using by ADJUST and SET switches.

STEP 10

Press the TRIGGER switch.

SP mode recording.

STEP 11

Press the BACK LIGHT switch during recording and confirm the operation.

STEP 12

Slide the 1/1000 shutter to on and confirm the operation and turn to off.

STEP 13

Check the focus operation using by the FOCUS switch.

STEP 14

Press the TRIGGER switch.

SP mode standby.

STEP 15

Set the TAPE SPEED to LP mode.

STEP 16

Press the FADE switch.

STEP 17

Press the TRIGGER switch.

LP mode recording after fade in.

STEP 18

Press the TRIGGER switch.

LP mode standby.

STEP 19

Press the REC REVIEW switch and confirm the operation.

STEP 20

Press the EDIT SERCH (+) switch and confirm the operation.

STEP 21

Press the EDIT SERCH (-) switch and confirm the operation.

LP mode recording.

STEP 22

Press the TRIGGER switch.

STEP 23

Press the FUNCTION switch.
Check the VCR LED ON.

STEP 24

Press the REW switch.

STEP 25

Tape rewind is automatically STOP when the tape counter reached to 0:00:00.

STEP 26

Press the PLAY switch.

STEP 27

Check the picture during playback.

STEP 28

Check the sound during playback.

STEP 29

Press the STOP switch.

STEP 30

Press the EJECT switch and remove the cassette tape.

STEP 31

Press the FUNCTION switch.
Check the turn off VCR LED.

END

When the SYSTEM CONTROL IC has runaway SYSTEM CONTROL IC will not accept any mode.
AT this time disconnect the battery and back up battery to reset the SYSTEM CONTROL IC.

STEP 1

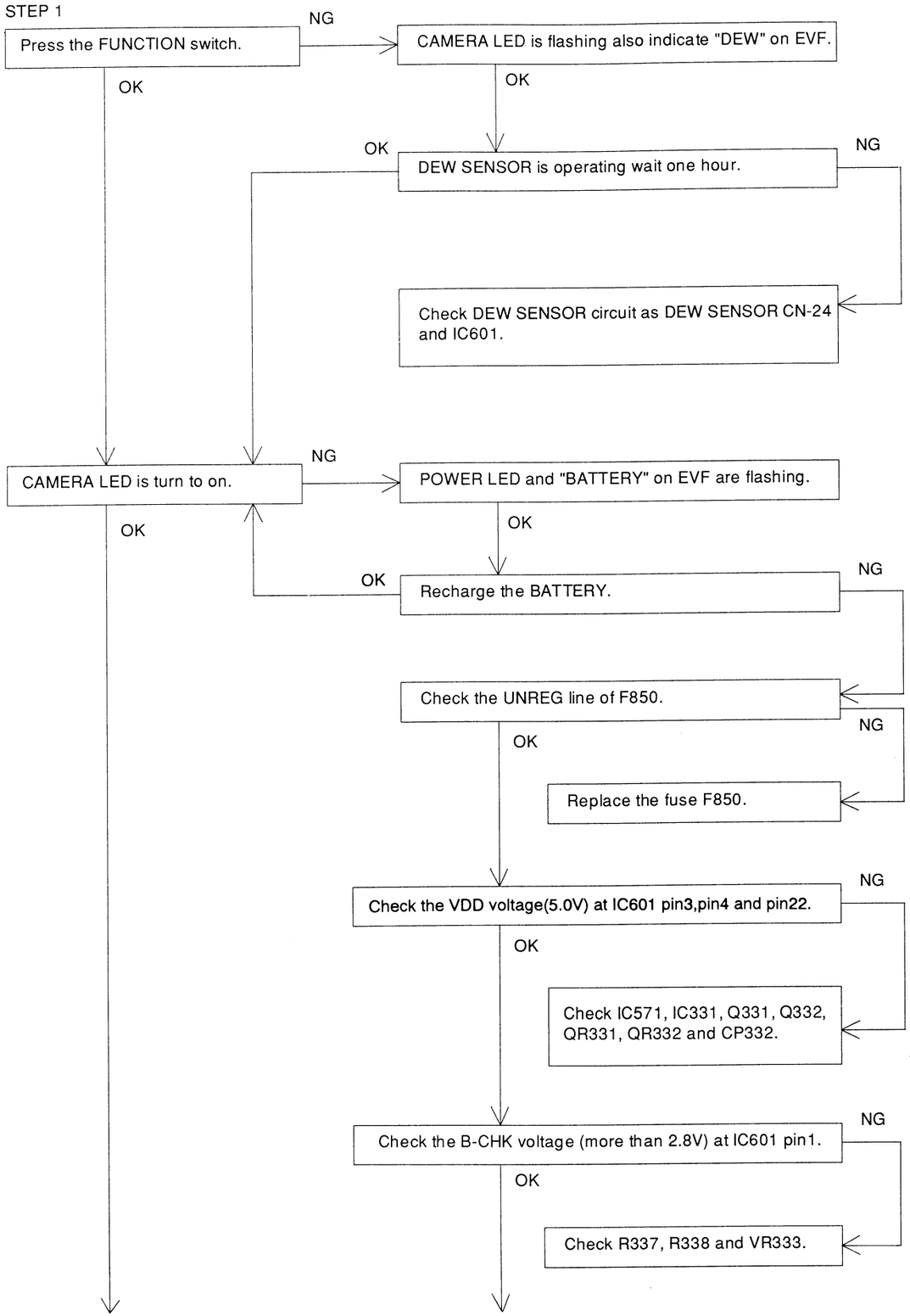
Press the FUNCTION switch.
NG
CAMERA LED is flashing also indicate "DEW" on EVF.
OK
OK
DEW SENSOR is operating wait one hour.
OK
NG
Check DEW SENSOR circuit as DEW SENSOR CN-24 and IC601.
CAMERA LED is turn to on.
NG
POWER LED and "BATTERY" on EVF are flashing.
OK
OK
Recharge the BATTERY.
OK
NG
Check the UNREG line of F850.
NG
OK
Replace the fuse F850.
Check the VDD voltage(5.0V) at IC601 pin3,pin4 and pin22.
NG
OK
Check IC571, IC331, Q331, Q332, QR331, QR332 and CP332.
Check the B-CHK voltage (more than 2.8V) at IC601 pin1.
NG
OK
Check R337, R338 and VR333.

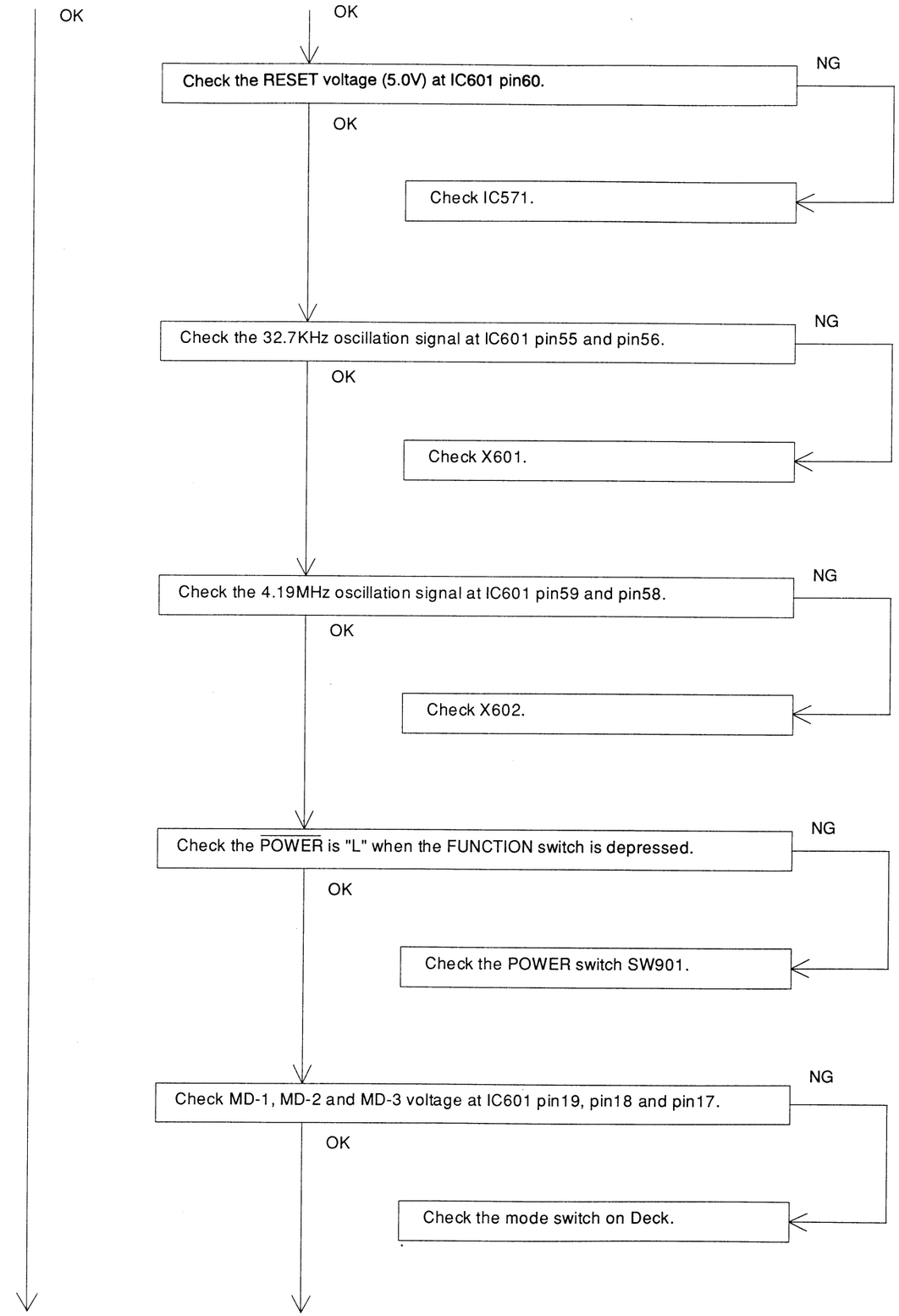
OK
OK
Check the RESET voltage (5.0V) at IC601 pin60.
NG
OK
Check IC571.
Check the 32.7KHz oscillation signal at IC601 pin55 and pin56.
NG
OK
Check X601.
Check the 4.19MHz oscillation signal at IC601 pin59 and pin58.
NG
OK
Check X602.
Check the POWER is "L" when the FUNCTION switch is depressed.
NG
OK
Check the POWER switch SW901.
Check MD-1, MD-2 and MD-3 voltage at IC601 pin19, pin18 and pin17.
NG
OK
Check the mode switch on Deck.

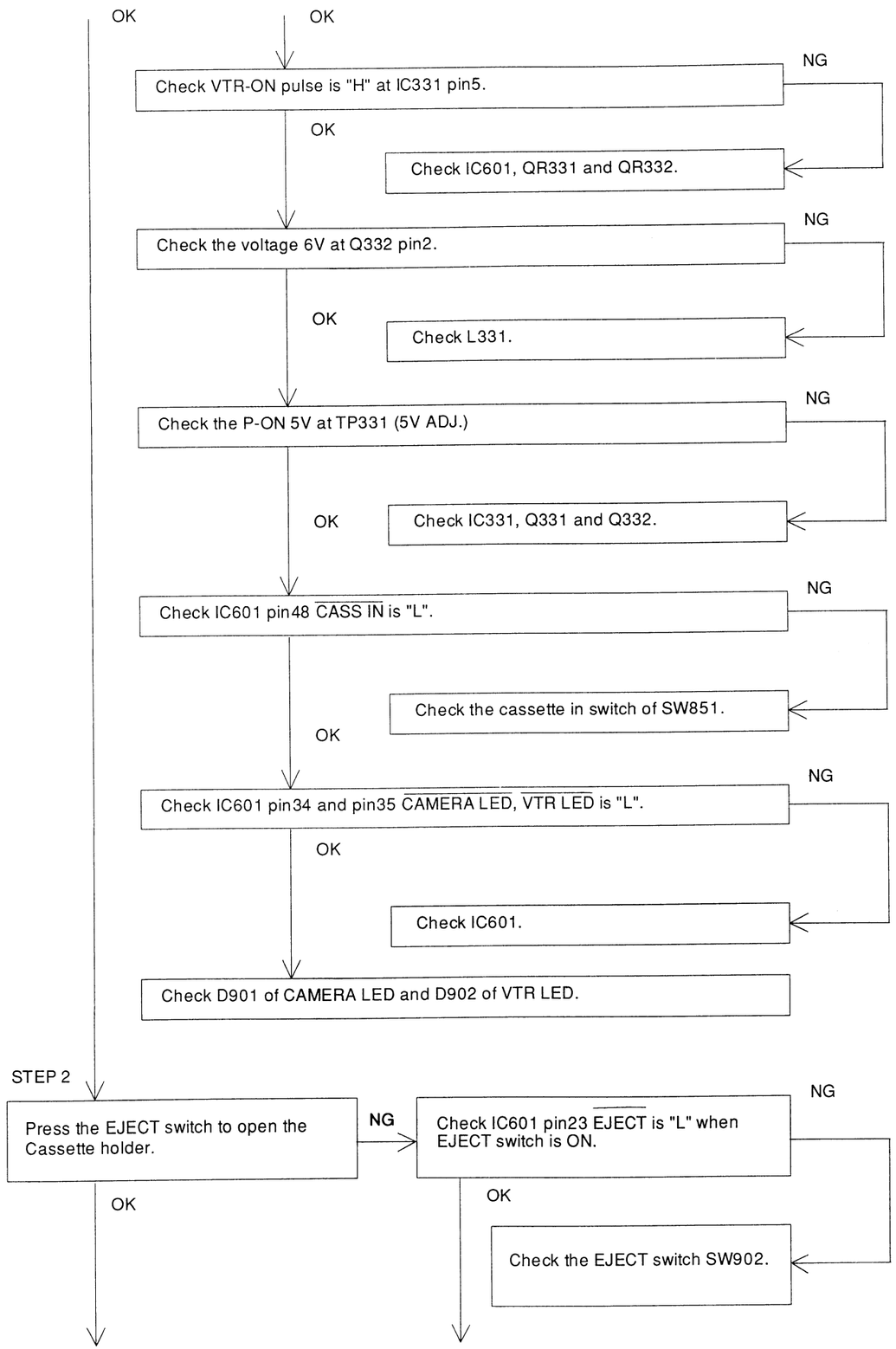
OK
OK
Check VTR-ON pulse is "H" at IC331 pin5.
NG
OK
Check IC601, QR331 and QR332.
Check the voltage 6V at Q332 pin2.
NG
OK
Check L331.
Check the P-ON 5V at TP331 (5V ADJ.)
NG
OK
Check IC331, Q331 and Q332.
Check IC601 pin48 CASS IN is "L".
NG
Check the cassette in switch of SW851.
OK
Check IC601 pin34 and pin35 CAMERA LED, VTR LED is "L".
NG
OK
Check IC601.
Check D901 of CAMERA LED and D902 of VTR LED.
STEP 2
Press the EJECT switch to open the Cassette holder.
NG
Check IC601 pin23 EJECT is "L" when EJECT switch is ON.
NG
OK
OK
Check the EJECT switch SW902.

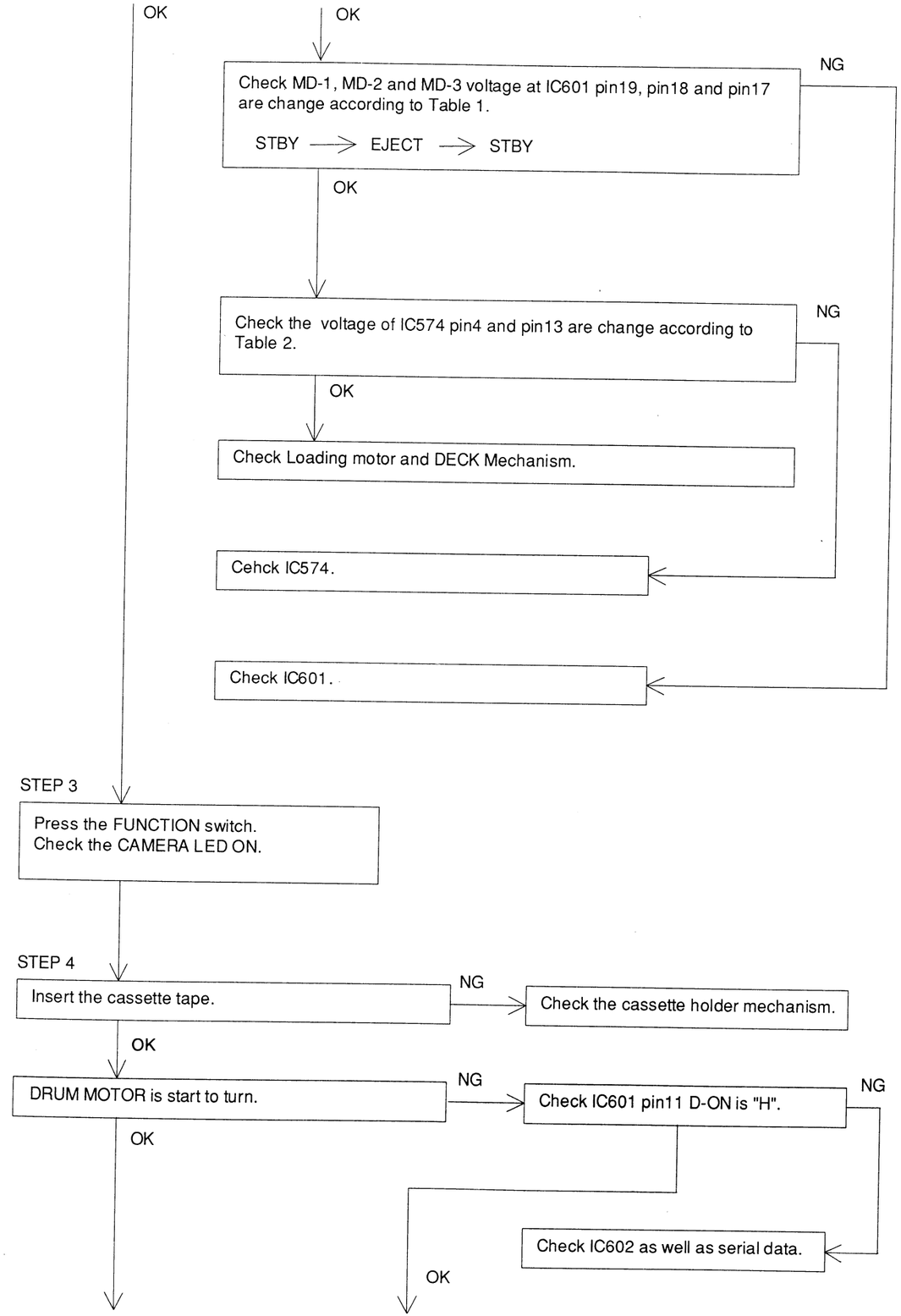
OK
OK
Check MD-1, MD-2 and MD-3 voltage at IC601 pin19, pin18 and pin17 are change according to Table 1.
STBY → EJECT → STBY
NG
OK
Check the voltage of IC574 pin4 and pin13 are change according to Table 2.
NG
OK
Check Loading motor and DECK Mechanism.
Cehck IC574.
Check IC601.
STEP 3
Press the FUNCTION switch.
Check the CAMERA LED ON.
STEP 4
Insert the cassette tape.
NG
Check the cassette holder mechanism.
OK
DRUM MOTOR is start to turn.
NG
Check IC601 pin11 D-ON is "H".
NG
OK
Check IC602 as well as serial data.
OK

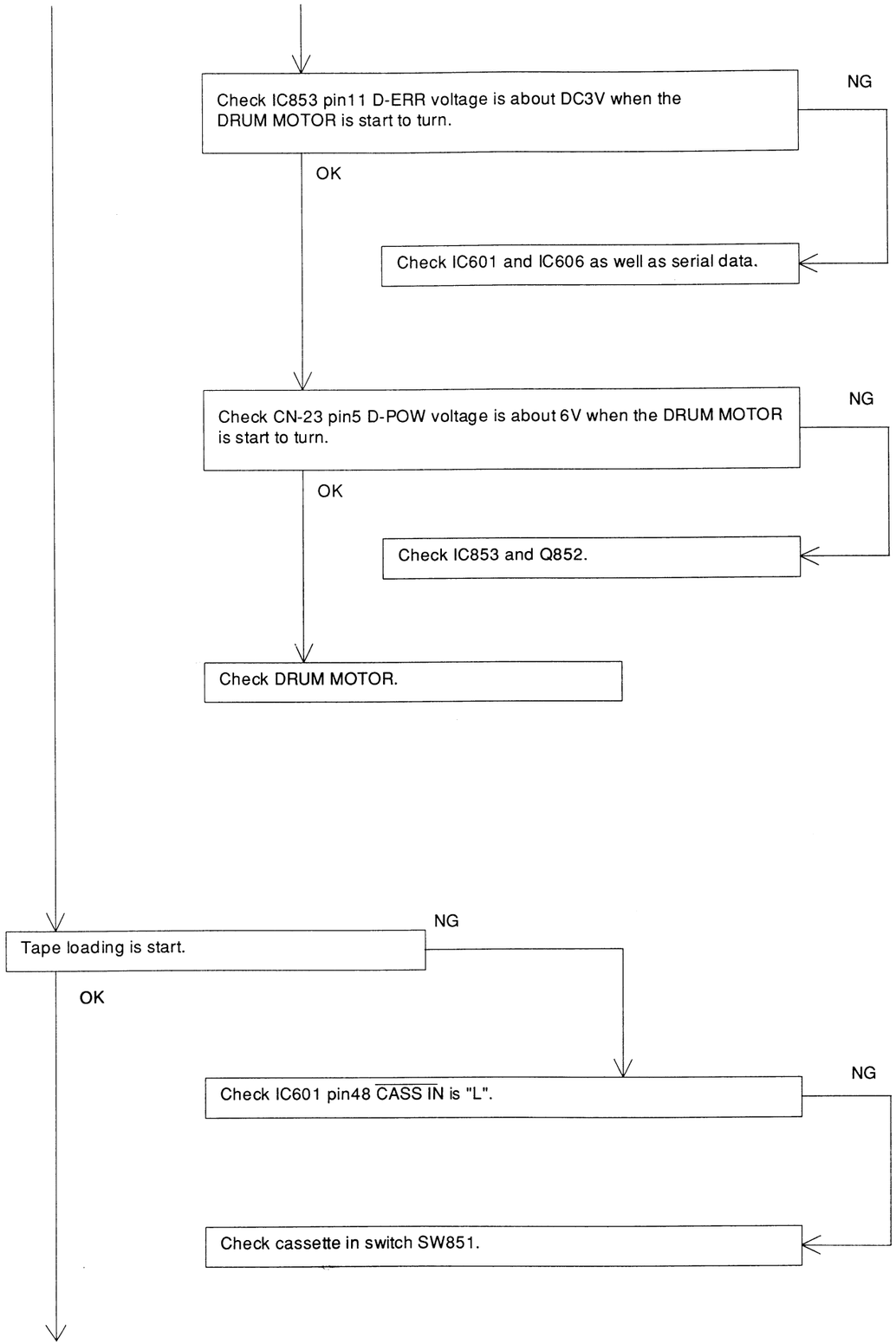
Check IC853 pin11 D-ERR voltage is about DC3V when the DRUM MOTOR is start to turn.
NG
OK
Check IC601 and IC606 as well as serial data.
Check CN-23 pin5 D-POW voltage is about 6V when the DRUM MOTOR is start to turn.
NG
OK
Check IC853 and Q852.
Check DRUM MOTOR.
Tape loading is start.
NG
OK
Check IC601 pin48 CASS IN is "L".
NG
Check cassette in switch SW851.

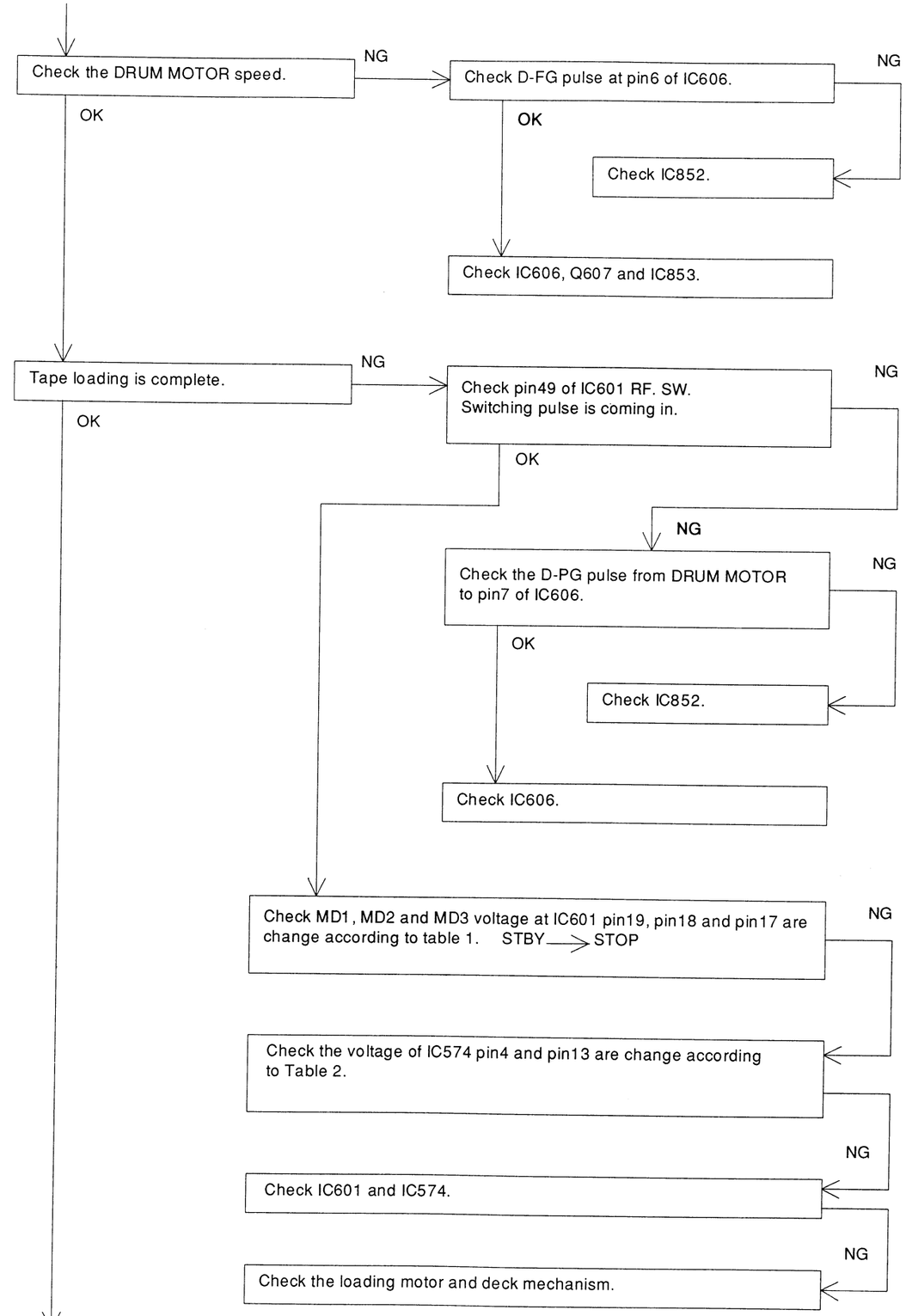
Check the DRUM MOTOR speed.
NG
OK
Check D-FG pulse at pin6 of IC606.
NG
OK
Check IC852.
Check IC606, Q607 and IC853.
Tape loading is complete.
NG
OK
Check pin49 of IC601 RF. SW. Switching pulse is coming in.
NG
OK
NG
Check the D-PG pulse from DRUM MOTOR to pin7 of IC606.
NG
OK
Check IC852.
Check IC606.
Check MD1, MD2 and MD3 voltage at IC601 pin19, pin18 and pin17 are change according to table 1. STBY → STOP
NG
Check the voltage of IC574 pin4 and pin13 are change according to Table 2.
NG
Check IC601 and IC574.
NG
Check the loading motor and deck mechanism.

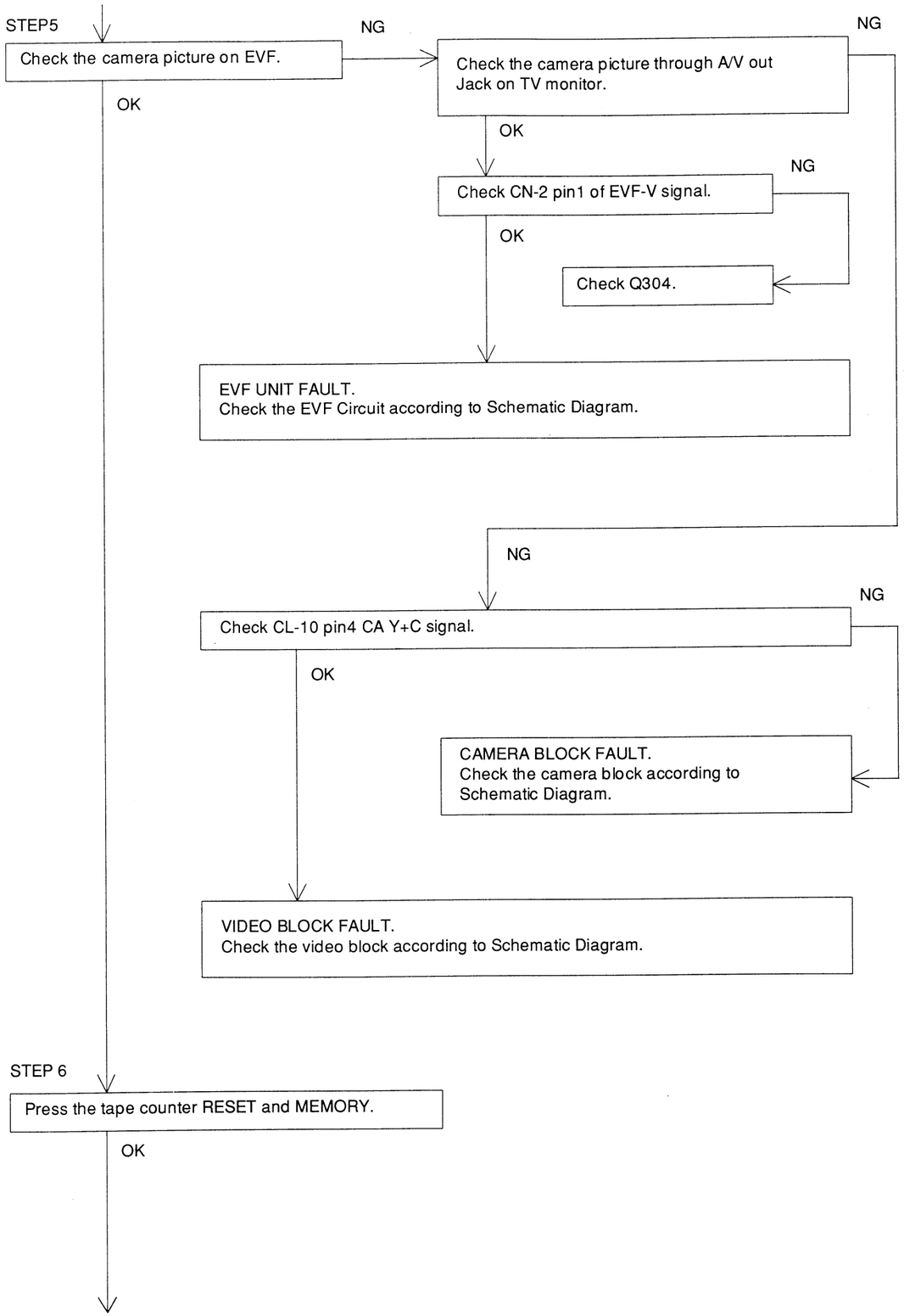
STEP5
Check the camera picture on EVF.
NG
Check the camera picture through A/V out Jack on TV monitor.
NG
OK
OK
Check CN-2 pin1 of EVF-V signal.
NG
OK
Check Q304.
EVF UNIT FAULT.
Check the EVF Circuit according to Schematic Diagram.
NG
Check CL-10 pin4 CA Y+C signal.
NG
OK
CAMERA BLOCK FAULT.
Check the camera block according to Schematic Diagram.
VIDEO BLOCK FAULT.
Check the video block according to Schematic Diagram.
STEP 6
Press the tape counter RESET and MEMORY.
OK

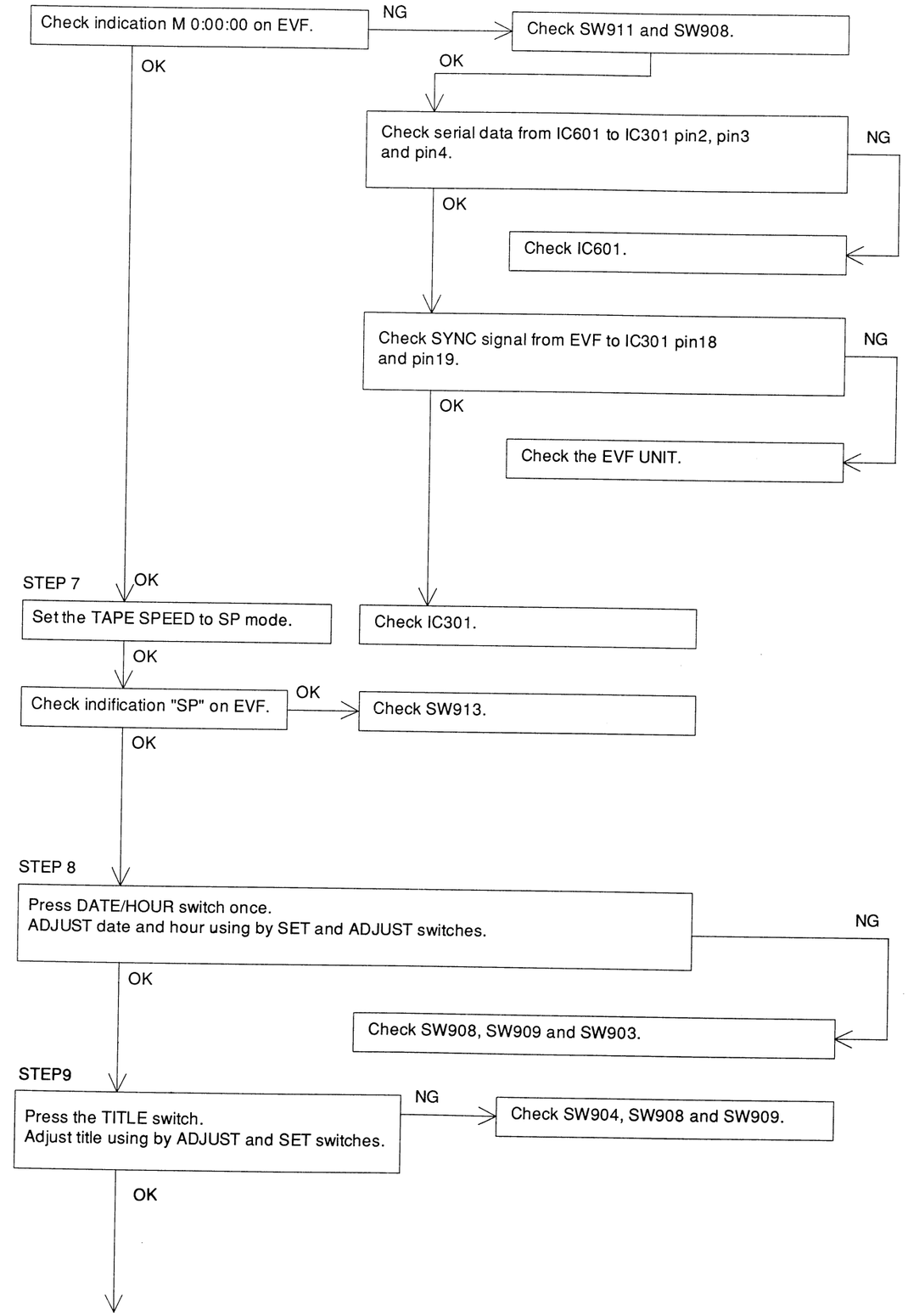
Check indication M 0:00:00 on EVF.
NG
Check SW911 and SW908.
OK
OK
Check serial data from IC601 to IC301 pin2, pin3 and pin4.
NG
OK
Check IC601.
Check SYNC signal from EVF to IC301 pin18 and pin19.
NG
OK
Check the EVF UNIT.
STEP 7
OK
Set the TAPE SPEED to SP mode.
Check IC301.
OK
Check indification "SP" on EVF.
OK
Check SW913.
OK
STEP 8
Press DATE/HOUR switch once.
ADJUST date and hour using by SET and ADJUST switches.
NG
OK
Check SW908, SW909 and SW903.
STEP9
Press the TITLE switch.
Adjust title using by ADJUST and SET switches.
NG
Check SW904, SW908 and SW909.
OK

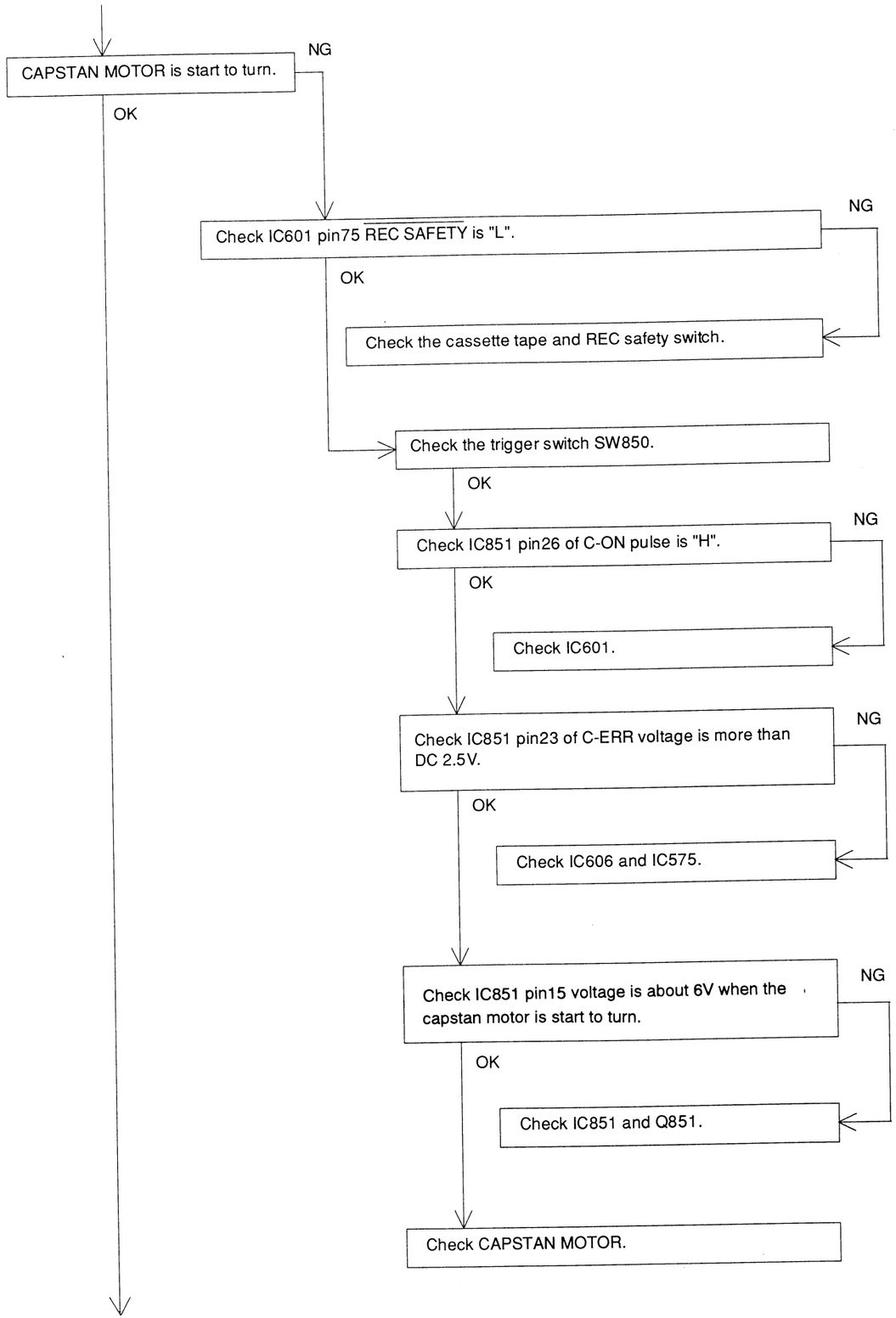
CAPSTAN MOTOR is start to turn.
NG
OK
Check IC601 pin75 REC SAFETY is "L".
NG
OK
Check the cassette tape and REC safety switch.
Check the trigger switch SW850.
OK
Check IC851 pin26 of C-ON pulse is "H".
NG
OK
Check IC601.
Check IC851 pin23 of C-ERR voltage is more than DC 2.5V.
NG
OK
Check IC606 and IC575.
Check IC851 pin15 voltage is about 6V when the capstan motor is start to turn.
NG
OK
Check IC851 and Q851.
Check CAPSTAN MOTOR.

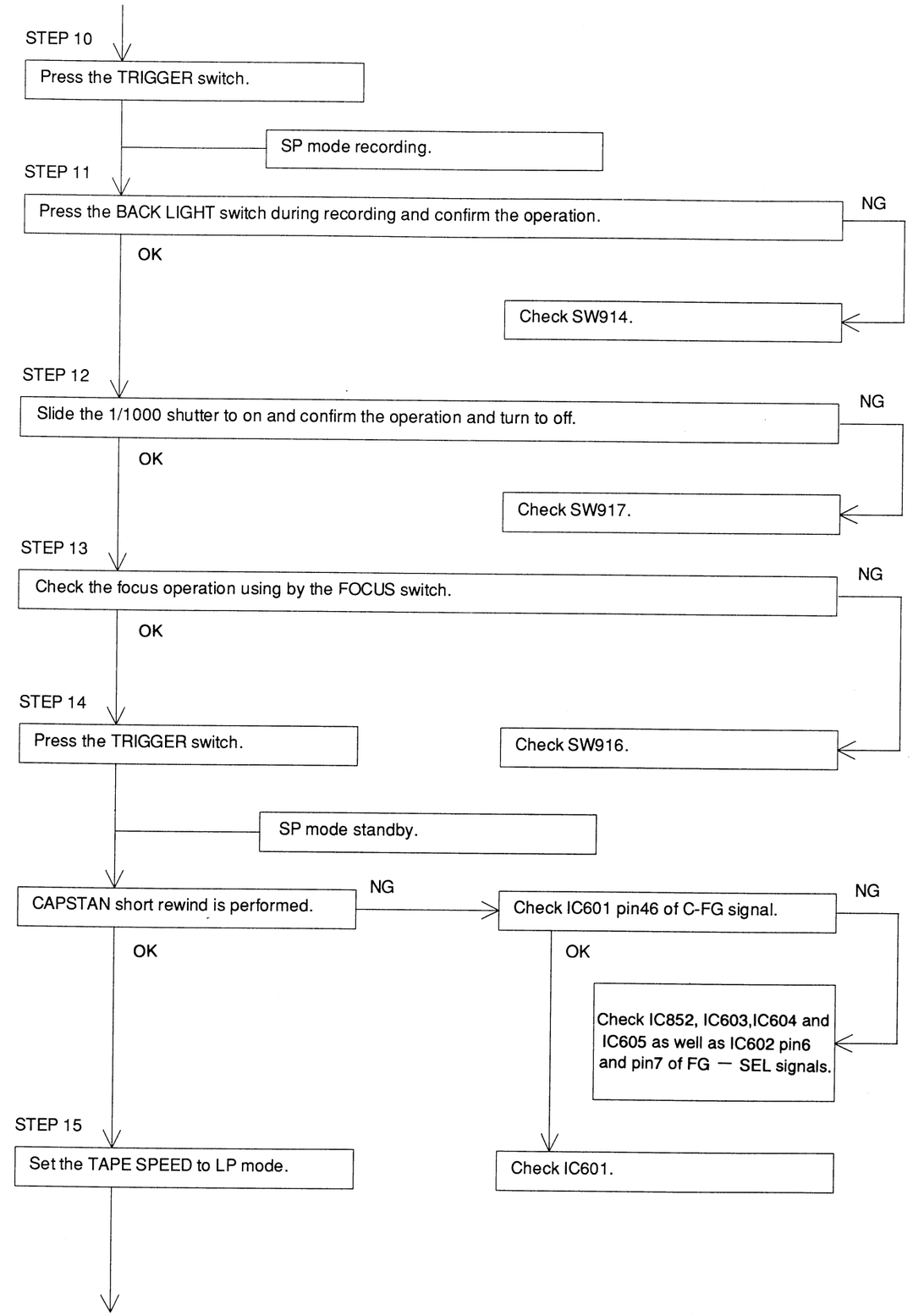
STEP 10
Press the TRIGGER switch.
SP mode recording.
STEP 11
Press the BACK LIGHT switch during recording and confirm the operation.
NG
OK
Check SW914.
STEP 12
Slide the 1/1000 shutter to on and confirm the operation and turn to off.
NG
OK
Check SW917.
STEP 13
Check the focus operation using by the FOCUS switch.
NG
OK
STEP 14
Press the TRIGGER switch.
Check SW916.
SP mode standby.
CAPSTAN short rewind is performed.
NG
Check IC601 pin46 of C-FG signal.
NG
OK
OK
Check IC852, IC603,IC604 and IC605 as well as IC602 pin6 and pin7 of FG — SEL signals.
STEP 15
Set the TAPE SPEED to LP mode.
Check IC601.

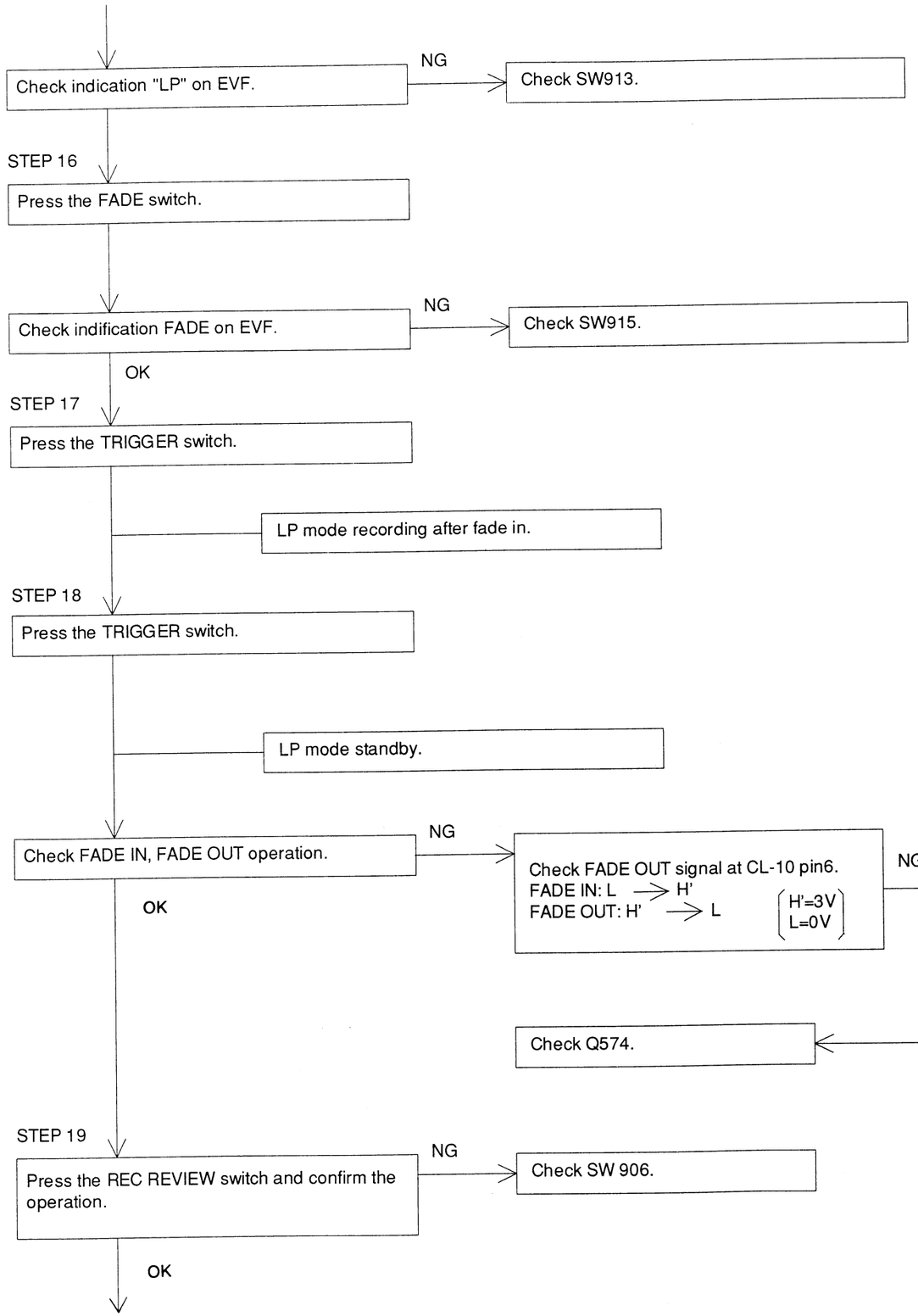
Check indication "LP" on EVF.
NG
Check SW913.
STEP 16
Press the FADE switch.
Check indification FADE on EVF.
NG
Check SW915.
OK
STEP 17
Press the TRIGGER switch.
LP mode recording after fade in.
STEP 18
Press the TRIGGER switch.
LP mode standby.
Check FADE IN, FADE OUT operation.
NG
Check FADE OUT signal at CL-10 pin6.
FADE IN: L → H'
FADE OUT: H' → L
H'=3V
L=0V
NG
OK
Check Q574.
STEP 19
Press the REC REVIEW switch and confirm the operation.
NG
Check SW 906.
OK

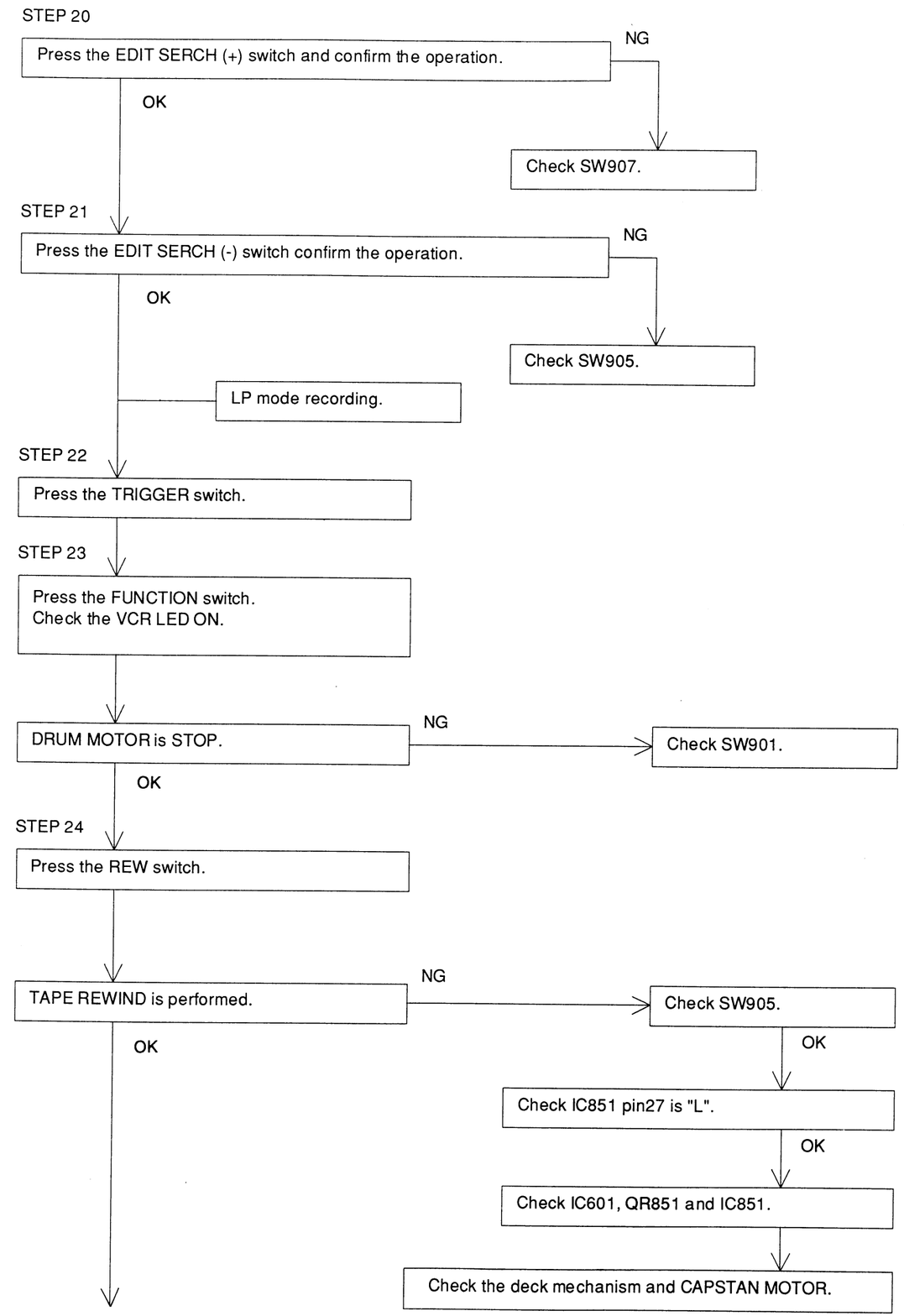
STEP 20
Press the EDIT SERCH (+) switch and confirm the operation.
NG
OK
Check SW907.
STEP 21
Press the EDIT SERCH (-) switch confirm the operation.
NG
OK
Check SW905.
LP mode recording.
STEP 22
Press the TRIGGER switch.
STEP 23
Press the FUNCTION switch.
Check the VCR LED ON.
DRUM MOTOR is STOP.
NG
Check SW901.
OK
STEP 24
Press the REW switch.
TAPE REWIND is performed.
NG
Check SW905.
OK
OK
Check IC851 pin27 is "L".
OK
Check IC601, QR851 and IC851.
Check the deck mechanism and CAPSTAN MOTOR.

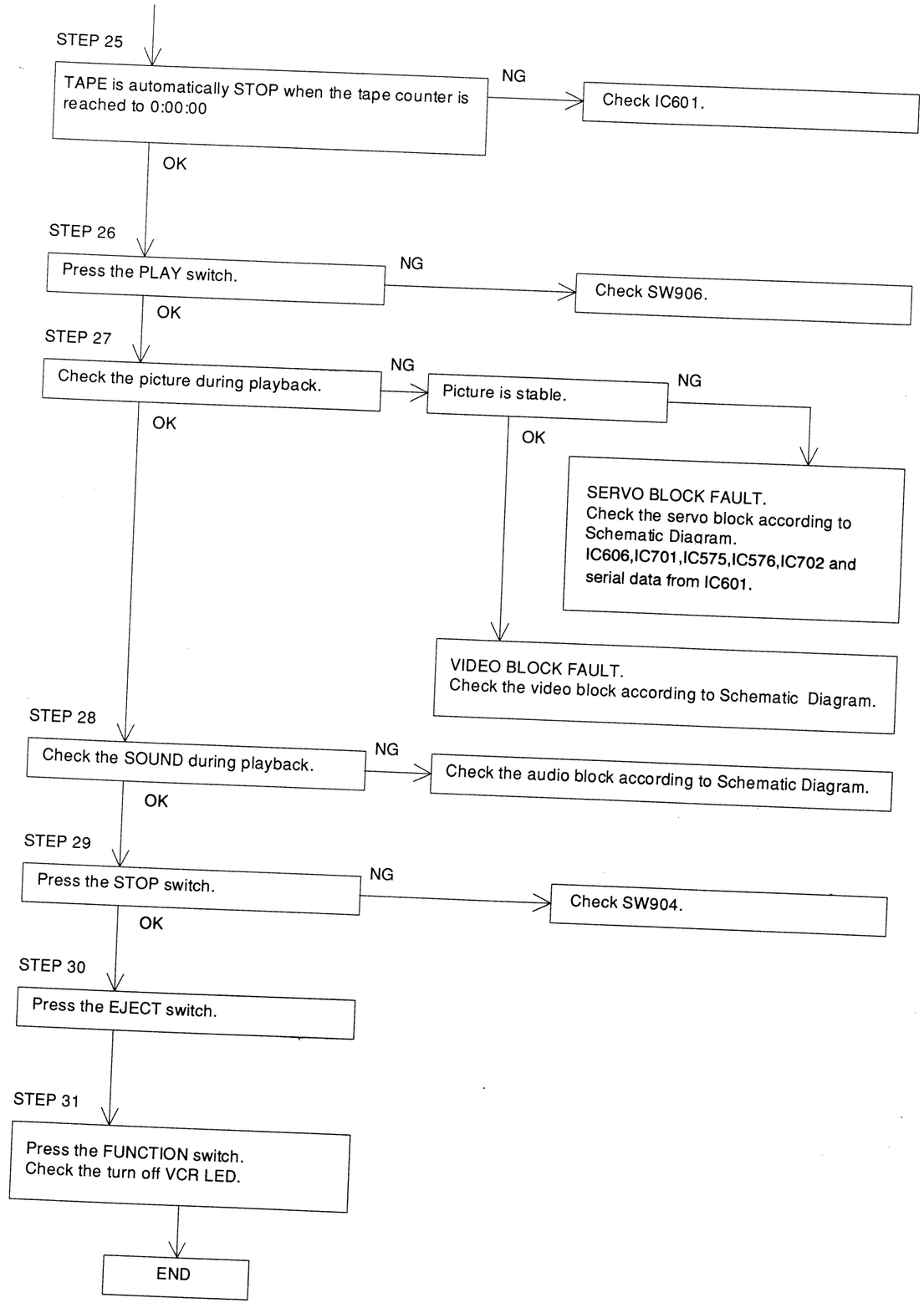
STEP 25
TAPE is automatically STOP when the tape counter is reached to 0:00:00
NG
Check IC601.
OK
STEP 26
Press the PLAY switch.
NG
Check SW906.
OK
STEP 27
Check the picture during playback.
NG
Picture is stable.
NG
OK
OK
SERVO BLOCK FAULT.
Check the servo block according to Schematic Diagram.
IC606,IC701,IC575,IC576,IC702 and serial data from IC601.
VIDEO BLOCK FAULT.
Check the video block according to Schematic Diagram.
STEP 28
Check the SOUND during playback.
NG
Check the audio block according to Schematic Diagram.
OK
STEP 29
Press the STOP switch.
NG
Check SW904.
OK
STEP 30
Press the EJECT switch.
STEP 31
Press the FUNCTION switch.
Check the turn off VCR LED.
END

EXPLODED VIEW(CABINET)

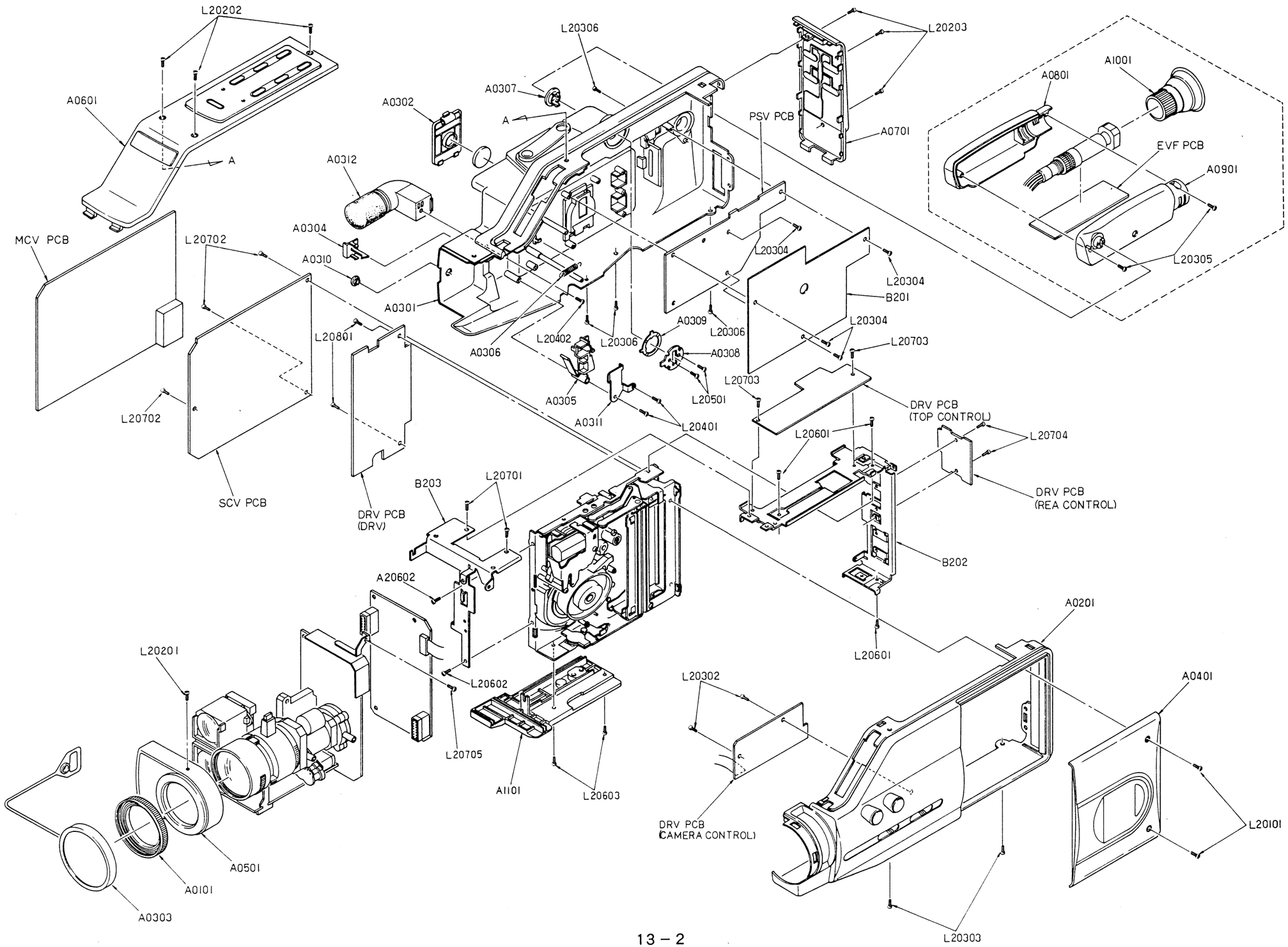

MECHANICAL PARTS LIST(For Europe Model)

Ref.No.	Description	PartNo.
MECHANICAL PARTS		
A301	CABINET ASS'Y, LEFT	DVM200755X
A0101	LENS HOOD	0VM300869
A0302	COVER, LITHIUM BATTERY	0VM300864
A0303	CAP, LENS	0VM300868
A0304	KNOB SLIDE, BAT. EJECT	0VM300870
A0305	LOCK LEVER, BAT.	0VM300871
A0306	SPRING PULL . BAT	0VM402690
A0307	BASE,EVF	0VM402691
A0308	PLATE,EVF	0VM402692
A0309	SPRING PLATE, EVF	0VM402693
A0310	COVER, AF	0VM402694
A0311	BRACKET, BAT. EJECT LEVER	0VM402845
A0312	MICROPHONE HXM1214-010010	DMECX00HD0C1
A0501	FRONT PANEL ASS'Y	0VM300885
A0701	REAR PANEL ASS'Y	0VM300887
A0801	EVF CABINET CASE	0VM200750
A0901	EVF BOTTOM CASE ASS'Y	0VM402704
A1001	EVF EYEPIECE ASS'Y	0VM300888
A1101	LID, BOTTOM	0VM200747
A1201	LENS UNIT 51YA	ULZU000JA001
B201	INSULATOR, POWER P PLATE	0VM403155
B202	SUB CHASSIS	0VM200748
B203	BRACKET MECHANICAL CHASSIS	0VM300875
B204	BRACKET, X'TAL, OPLF	0VM300858
B205	BRACKET CCD, HEATSINK	0VM402679
B206	CUSHION, OPLF	0VM402680
SCREWS		
L20101	M2X6, BIND HEAD	SBK32060
L20201	CAMERA, M2X5, PAN HEAD	MPKJ2050
L20202	CAMERA, M2X5, PAN HEAD	MPKJ2050
L20203	CAMERA, M2X5, PAN HEAD	MPKJ2050
L20205	TAPPING, CAMERA, M2X5, PAN HEAD	MPKG2050
L20302	TAPPING, CAMERA, M2X5, PAN HEAD	MPKG2050
L20303	TAPPING, CAMERA, M2X5, PAN HEAD	MPKG2050
L20304	TAPPING, CAMERA, M2X5, PAN HEAD	MPKG2050
L20305	TAPPING, CAMERA, M2X5, PAN HEAD	MPKG2050
L20306	TAPPING, CAMERA, M2X5, PAN HEAD	MPKG2050
L20307	TAPPING, CAMERA, M2X5, PAN HEAD	MPKG2050
L20308	TAPPING, CAMERA, M2X5, PAN HEAD	MPKG2050
L20309	TAPPING, CAMERA, M2X5, PAN HEAD	MPKG2050
L20401	TAPPING, CAMERA, M2X6, BAIND HEAD	GCMB2060
L20402	TAPPING, CAMERA, M2X6, BAIND HEAD	GCMB2060
L20501	CAMERA, M2X10, PAN HEAD	MPKJ2100
L20601	CAMERA, M1.6X3	MPKJG030
L20602	CAMERA, M1.6X3	MPKJG030
L20603	CAMERA, M1.6X3	MPKJG030
L20701	TAPPING, CAMERA, M2X5, PAN HEAD	MPKF2050
L20702	TAPPING, CAMERA, M2X5, PAN HEAD	MPKF2050
L20703	TAPPING, CAMERA, M2X5, PAN HEAD	MPKF2050
L20704	TAPPING, CAMERA, M2X5, PAN HEAD	MPKF2050
L20705	TAPPING, M2X5, PAN HEAD	MPKF2050
L20801	TAPPING, CAMERA, M1.6X4, PAN HEAD	MPKGG040

Ref.No.	Description	PartNo.
PACKING MATERIALS		
	STYROFOAM, UPPER	0VM200873
	STYROFOAM, LOWER	0VM200874
	GIFT BOX	0VM301026
	BAG, UNIT	0VM402901
	SERIAL NO. LABEL	7E00050
	LABEL, SERIAL NO.	7E51030
ACCESSORIES		**0VSA04453**
	AV CABLE	WPC0152TM001
	DC CABLE	WPC0202TM001
	BATTERY PACK 5KR1200AEFNI-1581	XB0N122SY002
	ACCESSORY BAG	Z305060
	ACCESSORY BAG	Z323370
	CASSETTE TAPE 8MM	0VMN00548
⚠	OWNER'S MANUAL	0VMN00833
	SHOULDER BELT	0VM301116
	ACCESSORY BAG FOR CHARGER	Z312480
	LITHUM BATTER Y CR2025	5790121
BATTERY CHAGER UNIT		**0VSA04455**
	CONSISTS OF THE FOLLOWING:	
L20801	SCREW, TAPPING, M2X6, BIND HEAD	GPKB9012
L20802	SCREW, TAPPING, M2X6, PAN HEAD	GPKB2060
L20901	SCREW, M2X4, BIND HEAD	SBM32040
L21001	SCREW, M3X8, BIND HEAD	SBM33080
L21002	SCREW, M3X8, BIND HEAD	SBM33080
B207	AC BARRIER	0VM200816
B208	SHIELD CASE, AC	0VM200817
A1301	TOP CASE, AC	0VM200814
A1401	BOTTOM CASE, AC	0VM200815
A1501	LED, WINDOW	0VM300962
	AC CHARGER PCB ASSY (SEE ELECTRICAL PARTS LIST)	0VSA04170

C1581CA

MECHANICAL PARTS LIST(For Northern Europe Model)

Ref.No.	Description	PartNo.
MECHANICAL PARTS		
A301	CABINET ASS'Y, LEFT	DVM200755X
A0101	LENS HOOD	0VM300869
A0302	COVER, LITHIUM BATTERY	0VM300864
A0303	CAP, LENS	0VM300868
A0304	KNOB SLIDE, BAT. EJECT	0VM300870
A0305	LOCK LEVER, BAT.	0VM300871
A0306	SPRING PULL . BAT	0VM402690
A0307	BASE,EVF	0VM402691
A0308	PLATE,EVF	0VM402692
A0309	SPRING PLATE, EVF	0VM402693
A0310	COVER, AF	0VM402694
A0311	BRACKET, BAT. EJECT LEVER	0VM402845
A0312	MICROPHONE HXM1214-010010	DMECX00HD0C1
A0501	FRONT PANEL ASS'Y	0VM300885
A0701	REAR PANEL ASS'Y	0VM300887
A0801	EVF CABINET CASE	0VM200750
A0901	EVF BOTTOM CASE ASS'Y	0VM402704
A1001	EVF EYEPIECE ASS'Y	0VM300888
A1101	LID, BOTTOM	0VM200747
A1201	LENS UNIT 51YA	ULZU000JA001
B201	INSULATOR, POWER P PLATE	0VM403155
B202	SUB CHASSIS	0VM200748
B203	BRACKET MECHANICAL CHASSIS	0VM300875
B204	BRACKET, X'TAL, OPLF	0VM300858
B205	BRACKET CCD, HEATSINK	0VM402679
B206	CUSHION, OPLF	0VM402680
SCREWS		
L20101	M2X6, BIND HEAD	SBK32060
L20201	CAMERA, M2X5, PAN HEAD	MPKJ2050
L20202	CAMERA, M2X5, PAN HEAD	MPKJ2050
L20203	CAMERA, M2X5, PAN HEAD	MPKJ2050
L20205	TAPPING, CAMERA, M2X5, PAN HEAD	MPKG2050
L20302	TAPPING, CAMERA, M2X5, PAN HEAD	MPKG2050
L20303	TAPPING, CAMERA, M2X5, PAN HEAD	MPKG2050
L20304	TAPPING, CAMERA, M2X5, PAN HEAD	MPKG2050
L20305	TAPPING, CAMERA, M2X5, PAN HEAD	MPKG2050
L20306	TAPPING, CAMERA, M2X5, PAN HEAD	MPKG2050
L20307	TAPPING, CAMERA, M2X5, PAN HEAD	MPKG2050
L20308	TAPPING, CAMERA, M2X5, PAN HEAD	MPKG2050
L20309	TAPPING, CAMERA, M2X5, PAN HEAD	MPKG2050
L20401	TAPPING, CAMERA, M2X6, BAIND HEAD	GCMB2060
L20402	TAPPING, CAMERA, M2X6, BAIND HEAD	GCMB2060
L20501	CAMERA, M2X10, PAN HEAD	MPKJ2100
L20601	CAMERA, M1.6X3	MPKJG030
L20602	CAMERA, M1.6X3	MPKJG030
L20603	CAMERA, M1.6X3	MPKJG030
L20701	TAPPING, CAMERA, M2X5, PAN HEAD	MPKF2050
L20702	TAPPING, CAMERA, M2X5, PAN HEAD	MPKF2050
L20703	TAPPING, CAMERA, M2X5, PAN HEAD	MPKF2050
L20704	TAPPING, CAMERA, M2X5, PAN HEAD	MPKF2050
L20705	TAPPING, M2X5, PAN HEAD	MPKF2050
L20801	TAPPING, CAMERA, M1.6X4, PAN HEAD	MPKGG040

Ref.No.	Description	PartNo.
PACKING MATERIALS		
	STYROFOAM, UPPER	0VM200873
	STYROFOAM, LOWER	0VM200874
	GIFT BOX	0VM301026
	BAG, UNIT	0VM402901
	SERIAL NO. LABEL	7E00050
	LABEL, SERIAL NO.	7E51030
ACCESSORIES		**0VSA04453**
	AV CABLE	WPC0152TM001
	DC CABLE	WPC0202TM001
	BATTERY PACK 5KR1200AEFNI-1581	XB0N122SY002
	ACCESSORY BAG	Z305060
	ACCESSORY BAG	Z323370
	CASSETTE TAPE 8MM	0VMN00548
⚠	OWNER'S MANUAL	0VMN00835
	SHOULDER BELT	0VM301116
	ACCESSORY BAG FOR CHARGER	Z312480
	LITHUM BATTER Y CR2025	5790121
BATTERY CHAGER UNIT		**0VSA04455**
	CONSISTS OF THE FOLLOWING:	
L20801	SCREW, TAPPING, M2X6, BIND HEAD	GPKB9012
L20802	SCREW, TAPPING, M2X6, PAN HEAD	GPKB2060
L20901	SCREW, M2X4, BIND HEAD	SBM32040
L21001	SCREW, M3X8, BIND HEAD	SBM33080
L21002	SCREW, M3X8, BIND HEAD	SBM33080
B207	AC BARRIER	0VM200816
B208	SHIELD CASE, AC	0VM200817
A1301	TOP CASE, AC	0VM200814
A1401	BOTTOM CASE, AC	0VM200815
A1501	LED, WINDOW	0VM300962
	AC CHARGER PCB ASSY (SEE ELECTRICAL PARTS LIST)	0VSA04170

C1582CA

ELECTRICAL PARTS LIST

PRODUCT SAFETY NOTE: Products marked with a ⚠ have special characteristics important to safety. Before replacing any of these components, read carefully the product safety notice of this service manual. Don't degrade the safety of the product through improper servicing.

NOTE: Tolerance of Capacitors and Resistors are noted with the following symbols.

C.....±0.25%
D.....±0.5%
F.....±1%
G.....±2%
J.....±5%
K.....±10%
M.....±20%
N.....±30%
Z.....+80/-20%
X.....+40/-20%
P.....+100%

MCV PCB ASSEMBLY

Ref.No.	Description	PartNo.
	MCV PCB ASSEMBLY CONSISTS OF THE FOLLOWING:	0VSA03992
	CAPACITORS	
C301	ELECTROLYTIC 22μF/6.3V M H7	526R226V
C302	CHIP CERAMIC F Z 0.022μF/50V or	CHD1JZ80F223
	CHIP CERAMIC F Z 0.022μF/25V or	CHD1EZ80F223
	CHIP CERAMIC F Z 0.022μF/25V or	CHD1EZ80Z223
	CHIP CERAMIC F Z 0.022μF/50V	CHD1JZ80Z223
C303	CHIP CERAMIC SL J 27PF/50V	CHD1JJ8SL270
C304	CHIP CERAMIC B K 0.01μF/25V or	CHD1EK80B103
	CHIP CERAMIC B K 0.01μF/50V or	CHD1JK80B103
	CHIP CERAMIC B K 0.01μF/25V or	CHD1EK80X103
	CHIP CERAMIC B K 0.01μF/50V	CHD1JK80X103
C305	CHIP CERAMIC B K 0.01μF/25V or	CHD1EK80B103
	CHIP CERAMIC B K 0.01μF/50V or	CHD1JK80B103
	CHIP CERAMIC B K 0.01μF/25V or	CHD1EK80X103
	CHIP CERAMIC B K 0.01μF/50V	CHD1JK80X103
C306	ELECTROLYTIC 47μF/6.3V M H7	526R476V
C307	CHIP CERAMIC F Z 0.01μF/50V or	CHD1JZ80F103
	CHIP CERAMIC F Z 0.01μF/25V or	CHD1EZ80F103
	CHIP CERAMIC F Z 0.01μF/50V or	CHD1JZ80Z103
	CHIP CERAMIC F Z 0.01μF/25V	CHD1EZ80Z103
C308	ELECTROLYTIC 2.2μF/50V M H7	526W225V
C309	ELECTROLYTIC 0.47μF/50V M H7	526W474V
C310	CHIP CERAMIC SL J 22PF/50V	CHD1JJ8SL220
C311	ELECTROLYTIC 10μF/16V M H7	526T106V
C312	CHIP CERAMIC 1μF/16V F 2125 or	CA1C010KC001
	CHIP CERAMIC 1μF/16V F 2125 or	CA1C010MR002
	CHIP CERAMIC 1μF/16V F 2125	CA1C010TU003
C313	CHIP CERAMIC F Z 0.1μF/16V or	CHD1CZ80F104
	CHIP CERAMIC F Z 0.1μF/25V or	CHD1EZ80F104
	CHIP CERAMIC F Z 0.1μF/25V or	CHD1EZ80Z104
	CHIP CERAMIC F Z 0.1μF/16V	CHD1CZ80Z104
C314	ELECTROLYTIC 10μF/16V M H7	526T106V
C315	ELECTROLYTIC 2.2μF/50V M H7	526W225V
C316	ELECTROLYTIC 0.47μF/50V M H7	526W474V
C317	CHIP CERAMIC F Z 0.01μF/50V or	CHD1JZ80F103
	CHIP CERAMIC F Z 0.01μF/25V or	CHD1EZ80F103
	CHIP CERAMIC F Z 0.01μF/50V or	CHD1JZ80Z103
	CHIP CERAMIC F Z 0.01μF/25V	CHD1EZ80Z103
C318	ELECTROLYTIC 10μF/16V M H7	526T106V
C319	CHIP CERAMIC F Z 0.01μF/50V or	CHD1JZ80F103
	CHIP CERAMIC F Z 0.01μF/25V or	CHD1EZ80F103
	CHIP CERAMIC F Z 0.01μF/50V or	CHD1JZ80Z103

Ref.No.	Description	PartNo.
	CHIP CERAMIC F Z 0.01μF/25V	CHD1EZ80Z103
C320	ELECTROLYTIC 10μF/16V M H7	526T106V
C326	OS 33μF/10V M SA	CA1A336SY001
C327	OS 10μF/16V M SC	CA1C106SY002
C328	CHIP CERAMIC SL J 470PF/50V	CHD1JJ8SL471
C329	CHIP CERAMIC SL J 47PF/50V	CHD1JJ8SL470
C330	OS 33μF/10V M SA	CA1A336SY001
C331	ELECTROLYTIC 47μF/6.3V M H7	526R476V
C332	ELECTROLYTIC 47μF/6.3V M H7	526R476V
C333	ELECTROLYTIC 47μF/6.3V M H7	526R476V
C334	CHIP CERAMIC B K 2700PF/50V or	CHD1JK80B272
	CHIP CERAMIC B K 2700PF/50V or	CHD1JK80X272
	CHIP CERAMIC B K 2700PF/25V or	CHD1EK80B272
	CHIP CERAMIC B K 2700PF/25V	CHD1EK80X272
C335	CHIP CERAMIC CH J 470PF/50V	CHD1JJ8CH471
C336	ELECTROLYTIC 4.7μF/25V M	121U475V
C338	CHIP CERAMIC B K 1000PF/50V or	CHD1JK80B102
	CHIP CERAMIC B K 1000PF/25V or	CHD1EK80B102
	CHIP CERAMIC B K 1000PF/50V or	CHD1JK80X102
	CHIP CERAMIC B K 1000PF/25V	CHD1EK80X102
C345	CHIP CERAMIC 1μF/16V F 2125 or	CA1C010KC001
	CHIP CERAMIC 1μF/16V F 2125 or	CA1C010MR002
	CHIP CERAMIC 1μF/16V F 2125	CA1C010TU003
C346	CHIP CERAMIC 1μF/16V F 2125 or	CA1C010KC001
	CHIP CERAMIC 1μF/16V F 2125 or	CA1C010MR002
	CHIP CERAMIC 1μF/16V F 2125	CA1C010TU003
C347	CHIP CERAMIC B K 0.1μF/50V or	12B3104C
	CHIP CERAMIC B K 0.1μF/25V	12B2104C
C348	CHIP CERAMIC F Z 0.01μF/50V or	CHD1JZ80F103
	CHIP CERAMIC F Z 0.01μF/25V or	CHD1EZ80F103
	CHIP CERAMIC F Z 0.01μF/50V or	CHD1JZ80Z103
	CHIP CERAMIC F Z 0.01μF/25V	CHD1EZ80Z103
C349	ELECTROLYTIC 4.7μF/50V M H7	526W475V
C350	CHIP CERAMIC F Z 0.01μF/50V or	CHD1JZ80F103
	CHIP CERAMIC F Z 0.01μF/25V or	CHD1EZ80F103
	CHIP CERAMIC F Z 0.01μF/50V or	CHD1JZ80Z103
	CHIP CERAMIC F Z 0.01μF/25V	CHD1EZ80Z103
C351	CHIP CERAMIC 1μF/16V F 2125 or	CA1C010KC001
	CHIP CERAMIC 1μF/16V F 2125 or	CA1C010MR002
	CHIP CERAMIC 1μF/16V F 2125	CA1C010TU003
C352	ELECTROLYTIC 100μF/6.3V M H7	526R107V
C353	CHIP CERAMIC F Z 0.01μF/50V or	CHD1JZ80F103
	CHIP CERAMIC F Z 0.01μF/25V or	CHD1EZ80F103
	CHIP CERAMIC F Z 0.01μF/50V or	CHD1JZ80Z103

Ref.No.	Description	PartNo.
	CHIP CERAMIC F Z 0.01μF/25V	CHD1EZ80Z103
C354	ELECTROLYTIC 10μF/16V M H7	526T106V
C355	ELECTROLYTIC 10μF/16V M H7	526T106V
C356	CHIP CERAMIC 1μF/16V F 2125 or	CA1C010KC001
	CHIP CERAMIC 1μF/16V F 2125 or	CA1C010MR002
	CHIP CERAMIC 1μF/16V F 2125	CA1C010TU003
C357	CHIP CERAMIC 1μF/16V F 2125 or	CA1C010KC001
	CHIP CERAMIC 1μF/16V F 2125 or	CA1C010MR002
	CHIP CERAMIC 1μF/16V F 2125	CA1C010TU003
C358	CHIP CERAMIC 1μF/16V F 2125 or	CA1C010KC001
	CHIP CERAMIC 1μF/16V F 2125 or	CA1C010MR002
	CHIP CERAMIC 1μF/16V F 2125	CA1C010TU003
C359	CHIP CERAMIC 1μF/16V F 2125 or	CA1C010KC001
	CHIP CERAMIC 1μF/16V F 2125 or	CA1C010MR002
	CHIP CERAMIC 1μF/16V F 2125	CA1C010TU003
C360	CHIP CERAMIC F Z 0.01μF/50V or	CHD1JZ80F103
	CHIP CERAMIC F Z 0.01μF/25V or	CHD1EZ80F103
	CHIP CERAMIC F Z 0.01μF/50V or	CHD1JZ80Z103
	CHIP CERAMIC F Z 0.01μF/25V	CHD1EZ80Z103
C361	CHIP CERAMIC 1μF/16V F 2125 or	CA1C010KC001
	CHIP CERAMIC 1μF/16V F 2125 or	CA1C010MR002
	CHIP CERAMIC 1μF/16V F 2125	CA1C010TU003
C362	ELECTROLYTIC 10μF/16V M H7	526T106V
C363	CHIP CERAMIC 1μF/16V F 2125 or	CA1C010KC001
	CHIP CERAMIC 1μF/16V F 2125 or	CA1C010MR002
	CHIP CERAMIC 1μF/16V F 2125	CA1C010TU003
C364	CHIP CERAMIC 1μF/16V F 2125 or	CA1C010KC001
	CHIP CERAMIC 1μF/16V F 2125 or	CA1C010MR002
	CHIP CERAMIC 1μF/16V F 2125	CA1C010TU003
C365	ELECTROLYTIC 10μF/16V M H7	526T106V
C366	CHIP CERAMIC F Z 0.01μF/50V or	CHD1JZ80F103
	CHIP CERAMIC F Z 0.01μF/25V or	CHD1EZ80F103
	CHIP CERAMIC F Z 0.01μF/50V or	CHD1JZ80Z103
	CHIP CERAMIC F Z 0.01μF/25V	CHD1EZ80Z103
C367	ELECTROLYTIC 10μF/16V M H7	526T106V
C368	ELECTROLYTIC 10μF/16V M H7	526T106V
C369	ELECTROLYTIC 10μF/16V M H7	526T106V
C370	ELECTROLYTIC 10μF/16V M H7	526T106V
C371	CHIP CERAMIC F Z 0.01μF/50V or	CHD1JZ80F103
	CHIP CERAMIC F Z 0.01μF/25V or	CHD1EZ80F103
	CHIP CERAMIC F Z 0.01μF/50V or	CHD1JZ80Z103
	CHIP CERAMIC F Z 0.01μF/25V	CHD1EZ80Z103
C372	CHIP CERAMIC B K 1000PF/50V or	CHD1JK80B102
	CHIP CERAMIC B K 1000PF/25V or	CHD1EK80B102
	CHIP CERAMIC B K 1000PF/50V or	CHD1JK80X102
	CHIP CERAMIC B K 1000PF/25V	CHD1EK80X102
C373	CHIP CERAMIC F Z 0.022μF/50V or	CHD1JZ80F223
	CHIP CERAMIC F Z 0.022μF/25V or	CHD1EZ80F223
	CHIP CERAMIC F Z 0.022μF/50V or	CHD1JZ80Z223
	CHIP CERAMIC F Z 0.022μF/25V	CHD1EZ80Z223
C374	ELECTROLYTIC 10μF/16V M H7	526T106V
C375	CHIP CERAMIC F Z 0.022μF/50V or	CHD1JZ80F223
	CHIP CERAMIC F Z 0.022μF/25V or	CHD1EZ80F223
	CHIP CERAMIC F Z 0.022μF/50V or	CHD1JZ80Z223
	CHIP CERAMIC F Z 0.022μF/25V	CHD1EZ80Z223
C376	OS 47μF/6.3V M SA	CA0K476SY001
C377	CHIP CERAMIC SL J 270PF/50V	CHD1JJ8SL271
C378	CHIP CERAMIC SL J 56PF/50V	CHD1JJ8SL560
C379	ELECTROLYTIC 10μF/16V M H7	526T106V
C380	CHIP CERAMIC SL J 22PF/50V	CHD1JJ8SL220

Ref.No.	Description	PartNo.
C381	CHIP CERAMIC F Z 0.022μF/50V or	CHD1JZ80F223
	CHIP CERAMIC F Z 0.022μF/25V or	CHD1EZ80F223
	CHIP CERAMIC F Z 0.022μF/50V or	CHD1JZ80Z223
	CHIP CERAMIC F Z 0.022μF/25V	CHD1EZ80Z223
C382	ELECTROLYTIC 10μF/16V M	121T106V
C383	CHIP CERAMIC SL J 390PF/50V	CHD1JJ8SL391
C384	CHIP CERAMIC SL J 470PF/50V	CHD1JJ8SL471
C385	CHIP CERAMIC SL J 18PF/50V	CHD1JJ8SL180
C386	CHIP CERAMIC F Z 0.1μF/16V or	CHD1CZ80F104
	CHIP CERAMIC F Z 0.1μF/25V or	CHD1EZ80F104
	CHIP CERAMIC F Z 0.1μF/25V or	CHD1EZ80Z104
	CHIP CERAMIC F Z 0.1μF/16V	CHD1CZ80Z104
C387	CHIP CERAMIC B K 0.1μF/50V or	12B3104C
	CHIP CERAMIC B K 0.1μF/25V	12B2104C
C388	CHIP CERAMIC SL J 470PF/50V	CHD1JJ8SL471
C389	CHIP CERAMIC SL J 180PF/50V	CHD1JJ8SL181
C390	CHIP CERAMIC SL J 22PF/50V	CHD1JJ8SL220
C391	CHIP CERAMIC SL J 100PF/50V	CHD1JJ8SL101
C392	CHIP CERAMIC SL J 12PF/50V	CHD1JJ8SL120
C393	ELECTROLYTIC 10μF/16V M H7	526T106V
C394	CHIP CERAMIC F Z 0.022μF/50V or	CHD1JZ80F223
	CHIP CERAMIC F Z 0.022μF/25V or	CHD1EZ80F223
	CHIP CERAMIC F Z 0.022μF/25V or	CHD1EZ80Z223
	CHIP CERAMIC F Z 0.022μF/50V	CHD1JZ80Z223
C395	CHIP CERAMIC SL J 100PF/50V	CHD1JJ8SL101
C396	CHIP 1/16W J 0Ω	RCXGJR8Z0000
C398	CHIP CERAMIC CH J 22PF/50V or	CHD1JJ8CH220
	CHIP CERAMIC CG J 22PF/50V	CHD1JJ8CG220
C399	CHIP CERAMIC B K 0.01μF/25V or	CHD1EK80B103
	CHIP CERAMIC B K 0.01μF/50V or	CHD1JK80B103
	CHIP CERAMIC B K 0.01μF/25V or	CHD1EK80X103
	CHIP CERAMIC B K 0.01μF/50V	CHD1JK80X103
C400	CHIP CERAMIC B K 0.01μF/25V or	CHD1EK80B103
	CHIP CERAMIC B K 0.01μF/50V or	CHD1JK80B103
	CHIP CERAMIC B K 0.01μF/25V or	CHD1EK80X103
	CHIP CERAMIC B K 0.01μF/50V	CHD1JK80X103
C401	CHIP CERAMIC SL D 8PF/50V or	CHD1JD8SL8R0
	CHIP CERAMIC SL C 8PF/50V	CHD1JC8SL8R0
C402	CHIP CERAMIC SL J 100PF/50V	CHD1JJ8SL101
C403	ELECTROLYTIC 10μF/16V M	121T106V
C404	CHIP CERAMIC F Z 0.01μF/50V or	CHD1JZ80F103
	CHIP CERAMIC F Z 0.01μF/25V or	CHD1EZ80F103
	CHIP CERAMIC F Z 0.01μF/50V or	CHD1JZ80Z103
	CHIP CERAMIC F Z 0.01μF/25V	CHD1EZ80Z103
C405	CHIP CERAMIC B K 0.01μF/25V or	CHD1EK80B103
	CHIP CERAMIC B K 0.01μF/50V or	CHD1JK80B103
	CHIP CERAMIC B K 0.01μF/25V or	CHD1EK80X103
	CHIP CERAMIC B K 0.01μF/50V	CHD1JK80X103
C406	OS 47μF/6.3V M SA	CA0K476SY001
C407	CHIP CERAMIC F Z 0.022μF/50V or	CHD1JZ80F223
	CHIP CERAMIC F Z 0.022μF/25V or	CHD1EZ80F223
	CHIP CERAMIC F Z 0.022μF/50V or	CHD1JZ80Z223
	CHIP CERAMIC F Z 0.022μF/25V	CHD1EZ80Z223
C408	CHIP CERAMIC 1μF/16V F 2125 or	CA1C010KC001
	CHIP CERAMIC 1μF/16V F 2125 or	CA1C010MR002
	CHIP CERAMIC 1μF/16V F 2125	CA1C010TU003
C409	CHIP CERAMIC SL J 220PF/50V	CHD1JJ8SL221
C410	CHIP CERAMIC SL J 150PF/50V	CHD1JJ8SL151
C411	ELECTROLYTIC 10μF/10V M NP	524T106V
C412	ELECTROLYTIC 10μF/16V M H7	526T106V

Ref.No.	Description	PartNo.
C413	CHIP CERAMIC B K 0.022μF/25V or	CHD1EK80B223
	CHIP CERAMIC B K 0.022μF/25V or	CHD1EK80X223
	CHIP CERAMIC B K 0.022μF/16V	CHD1CK80X223
C415	ELECTROLYTIC 47μF/6.3V M H7	526R476V
C416	ELE CAP (NP) 0.22μF/50V(NP) H=7 or	CA1JR22NC001
	ELE CAP(NP) 0.22μF/50V(NP) H=7	CA1JR22EA001
C417	CHIP CERAMIC SL J 150PF/50V	CHD1JJ8SL151
C418	ELECTROLYTIC 0.47μF/50V M H7	526W474V
C419	ELECTROLYTIC 2.2μF/50V M H7	526W225V
C420	ELECTROLYTIC 10μF/16V M H7	526T106V
C421	ELECTROLYTIC 10μF/16V M H7	526T106V
C422	ELECTROLYTIC 1μF/50V M H7	526W105V
C423	CHIP CERAMIC B K 8200PF/50V or	CHD1JK80B822
	CHIP CERAMIC B K 8200PF/25V or	CHD1EK80B822
	CHIP CERAMIC B K 8200PF/50V or	CHD1JK80X822
	CHIP CERAMIC B K 8200PF/25V	CHD1EK80X822
C424	CHIP CERAMIC SL J 680PF/50V	1270681C
C425	CHIP CERAMIC B K 0.039μF/50V	12B3393C
C426	CHIP CERAMIC B K 4700PF/50V or	CHD1JK80B472
	CHIP CERAMIC B K 4700PF/50V or	CHD1JK80X472
	CHIP CERAMIC B K 4700PF/25V or	CHD1EK80X472
	CHIP CERAMIC B K 4700PF/25V	CHD1EK80B472
C427	CHIP CERAMIC CH C 5PF/50V or	CHD1JC8CH5R0
	CHIP CERAMIC CG C 5PF/50V	CHD1JC8CG5R0
C428	CHIP CERAMIC SL J 220PF/50V	CHD1JJ8SL221
C429	ELECTROLYTIC 2.2μF/50V M	121W225V
C430	CHIP CERAMIC SL J 100PF/50V	CHD1JJ8SL101
C431	ELECTROLYTIC 2.2μF/50V M	121W225V
C432	CHIP CERAMIC F Z 0.1μF/16V or	CHD1CZ80F104
	CHIP CERAMIC F Z 0.1μF/25V or	CHD1EZ80F104
	CHIP CERAMIC F Z 0.1μF/16V or	CHD1CZ80Z104
	CHIP CERAMIC F Z 0.1μF/25V	CHD1EZ80Z104
C433	CHIP CERAMIC SL J 470PF/50V	CHD1JJ8SL471
C434	ELECTROLYTIC 4.7μF/25V M	121U475V
C435	ELECTROLYTIC 47μF/6.3V M	121R476V
C436	ELECTROLYTIC 1μF/50V M	121W105V
C437	CHIP CERAMIC F Z 0.1μF/16V or	CHD1CZ80F104
	CHIP CERAMIC F Z 0.1μF/25V or	CHD1EZ80F104
	CHIP CERAMIC F Z 0.1μF/16V or	CHD1CZ80Z104
	CHIP CERAMIC F Z 0.1μF/25V	CHD1EZ80Z104
C438	CHIP CERAMIC CH C 5PF/50V or	CHD1JC8CH5R0
	CHIP CERAMIC CG C 5PF/50V	CHD1JC8CG5R0
C439	ELECTROLYTIC 3.3μF/50V M	121W335V
C440	CHIP CERAMIC F Z 0.01μF/50V or	CHD1JZ80F103
	CHIP CERAMIC F Z 0.01μF/25V or	CHD1EZ80F103
	CHIP CERAMIC F Z 0.01μF/50V or	CHD1JZ80Z103
	CHIP CERAMIC F Z 0.01μF/25V	CHD1EZ80Z103
C441	CHIP CERAMIC F Z 0.047μF/16V or	CHD1CZ80F473
	CHIP CERAMIC F Z 0.047μF/50V or	CHD1JZ80F473
	CHIP CERAMIC F Z 0.047μF/25V or	CHD1EZ80F473
	CHIP CERAMIC F Z 0.047μF/25V	CHD1EZ80Z473
C442	ELECTROLYTIC 100μF/6.3V M	121R107V
C443	ELECTROLYTIC 47μF/6.3V M	121R476V
C444	CHIP CERAMIC B K 0.01μF/25V or	CHD1EK80B103
	CHIP CERAMIC B K 0.01μF/50V or	CHD1JK80B103
	CHIP CERAMIC B K 0.01μF/25V or	CHD1EK80X103
	CHIP CERAMIC B K 0.01μF/50V	CHD1JK80X103
C445	CHIP CERAMIC F Z 0.022μF/50V or	CHD1JZ80F223
	CHIP CERAMIC F Z 0.022μF/25V or	CHD1EZ80F223
	CHIP CERAMIC F Z 0.022μF/25V or	CHD1EZ80Z223

Ref.No.	Description	PartNo.
	CHIP CERAMIC F Z 0.022μF/50V	CHD1JZ80Z223
C446	CHIP CERAMIC B K 2200PF/50V or	CHD1JK80B222
	CHIP CERAMIC B K 2200PF/25V or	CHD1EK80B222
	CHIP CERAMIC B K 2200PF/50V or	CHD1JK80X222
	CHIP CERAMIC B K 2200PF/25V	CHD1EK80X222
C447	CHIP CERAMIC B K 3900PF/50V or	CHD1JK80B392
	CHIP CERAMIC B K 3900PF/25V or	CHD1EK80B392
	CHIP CERAMIC B K 3900PF/50V or	CHD1JK80X392
	CHIP CERAMIC B K 3900PF/25V	CHD1EK80X392
C448	CHIP CERAMIC SL J 220PF/50V	CHD1JJ8SL221
C449	CHIP CERAMIC B K 1500PF/50V or	CHD1JK80B152
	CHIP CERAMIC B K 1500PF/25V or	CHD1EK80B152
	CHIP CERAMIC B K 1500PF/50V or	CHD1JK80X152
	CHIP CERAMIC B K 1500PF/25V	CHD1EK80X152
C450	ELECTROLYTIC 0.47μF/50V M H7	526W474V
C451	CHIP CERAMIC SL J 220PF/50V	CHD1JJ8SL221
C452	CHIP CERAMIC B K 0.022μF/25V or	CHD1EK80B223
	CHIP CERAMIC B K 0.022μF/25V or	CHD1EK80X223
	CHIP CERAMIC B K 0.022μF/16V	CHD1CK80X223
C453	CHIP CERAMIC B K 0.01μF/25V or	CHD1EK80B103
	CHIP CERAMIC B K 0.01μF/50V or	CHD1JK80B103
	CHIP CERAMIC B K 0.01μF/25V or	CHD1EK80X103
	CHIP CERAMIC B K 0.01μF/50V	CHD1JK80X103
C454	CHIP CERAMIC B K 0.01μF/25V or	CHD1EK80B103
	CHIP CERAMIC B K 0.01μF/50V or	CHD1JK80B103
	CHIP CERAMIC B K 0.01μF/25V or	CHD1EK80X103
	CHIP CERAMIC B K 0.01μF/50V	CHD1JK80X103
C455	CHIP CERAMIC B K 0.01μF/25V or	CHD1EK80B103
	CHIP CERAMIC B K 0.01μF/50V or	CHD1JK80B103
	CHIP CERAMIC B K 0.01μF/25V or	CHD1EK80X103
	CHIP CERAMIC B K 0.01μF/50V	CHD1JK80X103
C456	CHIP CERAMIC B K 6800PF/50V or	CHD1JK80B682
	CHIP CERAMIC B K 6800PF/25V or	CHD1EK80B682
	CHIP CERAMIC B K 6800PF/50V or	CHD1JK80X682
	CHIP CERAMIC B K 6800PF/25V	CHD1EK80X682
C457	CHIP CERAMIC B K 2200PF/50V or	CHD1JK80B222
	CHIP CERAMIC B K 2200PF/25V or	CHD1EK80B222
	CHIP CERAMIC B K 2200PF/50V or	CHD1JK80X222
	CHIP CERAMIC B K 2200PF/25V	CHD1EK80X222
C458	CHIP CERAMIC SL J 120PF/50V	CHD1JJ8SL121
C459	CHIP CERAMIC B K 3300PF/50V or	CHD1JK80B332
	CHIP CERAMIC B K 3300PF/25V or	CHD1EK80B332
	CHIP CERAMIC B K 3300PF/50V or	CHD1JK80X332
	CHIP CERAMIC B K 3300PF/25V	CHD1EK80X332
C460	ELECTROLYTIC 47μF/6.3V M	121R476V
C461	ELECTROLYTIC 47μF/6.3V M H7	526R476V
C463	CHIP CERAMIC B K 0.022μF/25V or	CHD1EK80B223
	CHIP CERAMIC B K 0.022μF/25V or	CHD1EK80X223
	CHIP CERAMIC B K 0.022μF/16V	CHD1CK80X223
C475	CHIP CERAMIC SL J 56PF/50V	CHD1JJ8SL560
C476	CHIP CERAMIC SL D 10PF/50V or	CHD1JD8SL100
	CHIP CERAMIC SL C 10PF/50V	CHD1JC8SL100
C477	CHIP CERAMIC B K 0.01μF/25V or	CHD1EK80B103
	CHIP CERAMIC B K 0.01μF/50V or	CHD1JK80B103
	CHIP CERAMIC B K 0.01μF/25V or	CHD1EK80X103
	CHIP CERAMIC B K 0.01μF/50V	CHD1JK80X103
C478	CHIP CERAMIC SL J 56PF/50V	CHD1JJ8SL560
C479	CHIP CERAMIC SL J 82PF/50V	CHD1JJ8SL820
C480	CHIP CERAMIC SL J 180PF/50V	CHD1JJ8SL181
C481	CHIP CERAMIC F Z 0.01μF/50V or	CHD1JZ80F103

Ref.No.	Description	PartNo.
	CHIP CERAMIC F Z 0.01μF/25V or	CHD1EZ80F103
	CHIP CERAMIC F Z 0.01μF/50V or	CHD1JZ80Z103
	CHIP CERAMIC F Z 0.01μF/25V	CHD1EZ80Z103
C482	ELECTROLYTIC 22μF/6.3V M H7	526R226V
C483	CHIP CERAMIC SL J 56PF/50V	CHD1JJ8SL560
C484	CHIP CERAMIC F Z 0.1μF/16V or	CHD1CZ80F104
	CHIP CERAMIC F Z 0.1μF/25V or	CHD1EZ80F104
	CHIP CERAMIC F Z 0.1μF/25V or	CHD1EZ80Z104
	CHIP CERAMIC F Z 0.1μF/16V	CHD1CZ80Z104
C485	CHIP CERAMIC SL J 82PF/50V	CHD1JJ8SL820
C486	CHIP CERAMIC B K 3300PF/50V or	CHD1JK80B332
	CHIP CERAMIC B K 3300PF/25V or	CHD1EK80B332
	CHIP CERAMIC B K 3300PF/50V or	CHD1JK80X332
	CHIP CERAMIC B K 3300PF/25V	CHD1EK80X332
C487	CHIP CERAMIC F Z 0.1μF/16V or	CHD1CZ80F104
	CHIP CERAMIC F Z 0.1μF/25V or	CHD1EZ80F104
	CHIP CERAMIC F Z 0.1μF/25V or	CHD1EZ80Z104
	CHIP CERAMIC F Z 0.1μF/16V	CHD1CZ80Z104
C488	CHIP CERAMIC F Z 0.01μF/50V or	CHD1JZ80F103
	CHIP CERAMIC F Z 0.01μF/25V or	CHD1EZ80F103
	CHIP CERAMIC F Z 0.01μF/50V or	CHD1JZ80Z103
	CHIP CERAMIC F Z 0.01μF/25V	CHD1EZ80Z103
C489	ELECTROLYTIC 22μF/6.3V M H7	526R226V
C490	CHIP CERAMIC B K 0.027μF/50V	12B3273C
C491	CHIP CERAMIC SL J 68PF/50V	CHD1JJ8SL680
C492	CHIP CERAMIC B K 2200PF/50V or	CHD1JK80B222
	CHIP CERAMIC B K 2200PF/25V or	CHD1EK80B222
	CHIP CERAMIC B K 2200PF/50V or	CHD1JK80X222
	CHIP CERAMIC B K 2200PF/25V	CHD1EK80X222
C493	CHIP CERAMIC SL J 33PF/50V	CHD1JJ8SL330
C494	CHIP CERAMIC SL J 150PF/50V	CHD1JJ8SL151
C495	CHIP CERAMIC SL J 47PF/50V	CHD1JJ8SL470
C496	CHIP CERAMIC SL J 470PF/50V	CHD1JJ8SL471
C497	CHIP CERAMIC SL J 39PF/50V	CHD1JJ8SL390
C498	CHIP CERAMIC SL J 270PF/50V	CHD1JJ8SL271
C499	CHIP CERAMIC B K 0.022μF/25V or	CHD1EK80B223
	CHIP CERAMIC B K 0.022μF/25V or	CHD1EK80X223
	CHIP CERAMIC B K 0.022μF/16V	CHD1CK80X223
C500	CHIP CERAMIC SL D 9PF/50V or	CHD1JD8SL9R0
	CHIP CERAMIC SL C 9PF/50V	CHD1JC8SL9R0
C501	CHIP CERAMIC B K 0.01μF/25V or	CHD1EK80B103
	CHIP CERAMIC B K 0.01μF/50V or	CHD1JK80B103
	CHIP CERAMIC B K 0.01μF/25V or	CHD1EK80X103
	CHIP CERAMIC B K 0.01μF/50V	CHD1JK80X103
C502	CHIP CERAMIC B K 0.01μF/25V or	CHD1EK80B103
	CHIP CERAMIC B K 0.01μF/50V or	CHD1JK80B103
	CHIP CERAMIC B K 0.01μF/25V or	CHD1EK80X103
	CHIP CERAMIC B K 0.01μF/50V	CHD1JK80X103
C503	CHIP CERAMIC SL D 10PF/50V or	CHD1JD8SL100
	CHIP CERAMIC SL C 10PF/50V	CHD1JC8SL100
C504	CHIP CERAMIC B K 0.022μF/25V or	CHD1EK80B223
	CHIP CERAMIC B K 0.022μF/25V or	CHD1EK80X223
	CHIP CERAMIC B K 0.022μF/16V	CHD1CK80X223
C505	CHIP CERAMIC SL J 15PF/50V	CHD1JJ8SL150
C506	CHIP CERAMIC SL J 33PF/50V	CHD1JJ8SL330
C531	ELECTROLYTIC 10μF/16V M H7	526T106V
C532	CHIP CERAMIC B K 0.01μF/25V or	CHD1EK80B103
	CHIP CERAMIC B K 0.01μF/50V or	CHD1JK80B103
	CHIP CERAMIC B K 0.01μF/25V or	CHD1EK80X103
	CHIP CERAMIC B K 0.01μF/50V	CHD1JK80X103

Ref.No.	Description	PartNo.
C533	CHIP CERAMIC F Z 0.01μF/50V or	CHD1JZ80F103
	CHIP CERAMIC F Z 0.01μF/25V or	CHD1EZ80F103
	CHIP CERAMIC F Z 0.01μF/50V or	CHD1JZ80Z103
	CHIP CERAMIC F Z 0.01μF/25V	CHD1EZ80Z103
C534	CHIP CERAMIC SL J 18PF/50V	CHD1JJ8SL180
C535	CHIP CERAMIC F Z 0.01μF/50V or	CHD1JZ80F103
	CHIP CERAMIC F Z 0.01μF/25V or	CHD1EZ80F103
	CHIP CERAMIC F Z 0.01μF/50V or	CHD1JZ80Z103
	CHIP CERAMIC F Z 0.01μF/25V	CHD1EZ80Z103
C536	CHIP CERAMIC B K 0.01μF/25V or	CHD1EK80B103
	CHIP CERAMIC B K 0.01μF/50V or	CHD1JK80B103
	CHIP CERAMIC B K 0.01μF/25V or	CHD1EK80X103
	CHIP CERAMIC B K 0.01μF/50V	CHD1JK80X103
C537	ELECTROLYTIC 4.7μF/50V M H7	526W475V
C538	CHIP CERAMIC B K 1000PF/50V or	CHD1JK80B102
	CHIP CERAMIC B K 1000PF/25V or	CHD1EK80B102
	CHIP CERAMIC B K 1000PF/50V or	CHD1JK80X102
	CHIP CERAMIC B K 1000PF/25V	CHD1EK80X102
C539	ELECTROLYTIC 1μF/50V M H7	526W105V
C540	CHIP CERAMIC F Z 0.01μF/50V or	CHD1JZ80F103
	CHIP CERAMIC F Z 0.01μF/25V or	CHD1EZ80F103
	CHIP CERAMIC F Z 0.01μF/50V or	CHD1JZ80Z103
	CHIP CERAMIC F Z 0.01μF/25V	CHD1EZ80Z103
C541	CHIP CERAMIC SL D 10PF/50V or	CHD1JD8SL100
	CHIP CERAMIC SL C 10PF/50V	CHD1JC8SL100
C542	CHIP CERAMIC SL J 100PF/50V	CHD1JJ8SL101
C543	CHIP CERAMIC B K 1000PF/50V or	CHD1JK80B102
	CHIP CERAMIC B K 1000PF/25V or	CHD1EK80B102
	CHIP CERAMIC B K 1000PF/50V or	CHD1JK80X102
	CHIP CERAMIC B K 1000PF/25V	CHD1EK80X102
C544	CHIP CERAMIC SL J 330PF/50V	CHD1JJ8SL331
C545	ELECTROLYTIC 1μF/50V M H7	526W105V
C546	CHIP CERAMIC SL D 10PF/50V or	CHD1JD8SL100
	CHIP CERAMIC SL C 10PF/50V	CHD1JC8SL100
C547	CHIP CERAMIC SL J 100PF/50V	CHD1JJ8SL101
C548	CHIP CERAMIC F Z 0.01μF/50V or	CHD1JZ80F103
	CHIP CERAMIC F Z 0.01μF/25V or	CHD1EZ80F103
	CHIP CERAMIC F Z 0.01μF/50V or	CHD1JZ80Z103
	CHIP CERAMIC F Z 0.01μF/25V	CHD1EZ80Z103
C549	ELECTROLYTIC 220μF/6.3V M H7	526R227V
C550	CHIP CERAMIC F Z 0.022μF/50V or	CHD1JZ80F223
	CHIP CERAMIC F Z 0.022μF/25V or	CHD1EZ80F223
	CHIP CERAMIC F Z 0.022μF/25V or	CHD1EZ80Z223
	CHIP CERAMIC F Z 0.022μF/50V	CHD1JZ80Z223
C551	ELECTROLYTIC 22μF/6.3V M H7	526R226V
C552	ELECTROLYTIC 220μF/6.3V M H7	526R227V
	FILTERS	
CF301	LEEDLESS LC TRAP FILTER 5.2MHZ	FAE525CTE001
CF302	CERAMIC FILTER 5.17MHZ	FBB515LMR001
	CONNECTORS	
CL-6	CONNECTOR(B TO B)12P REC 4-175638-2	JC38T12APH0C
CL-7	CONNECTOR(B TO B)18P REC 4-175638-8	JC38T18APH0C
CL-8	CONNECTOR(B TO B)18P REC 4-175638-8	JC38T18APH0C
CL-9	CONNECTOR(B TO B)12P REC 4-175638-2	JC38T12APH0C
CL-10	CONNECTOR(B TO B)16P POST1-175643-6	JC43A16APH0C
CN-1	CONNECTOR IL-Z-10PL-SMTY	JCILD10NBH0C
CN-2	CONNECTOR IL-Z-05PL-SMTY	JCILD05NBH0C
CN-3	CONNECTOR IL-Z-03PL-SMTY	JCILD03NBH0C
	DIODES	
D331	ZENER DIODE RD4.7M(B2)	ARD4R7MT1B2*

Ref.No.	Description	PartNo.
D332	CHIP DIODE DA115	ADA115T106**
D351	SCHOTTKY DIODE 1SS283	A1SS283T1***
D352	CHIP DIODE MA159	AMA159TX****
D501	CHIP DIODE MA160	AMA160TX****
D531	CHIP DIODE DA115	ADA115T106**
D532	CHIP DIODE MA141WK	AMA141WKTX**
D538	ZENER DIODE RD10M(B)	ARD10MT1B***
D539	ZENER DIODE RD10M(B)	ARD10MT1B***
D542	ZENER DIODE RD10M(B)	ARD10MT1B***
D543	ZENER DIODE RD10M(B)	ARD10MT1B***
	ICS	
IC301	IC UPD6145G-101-T1	14DV731
IC302	IC CXA1201Q	GCXA1201Q***
IC331	SWITCHING REGULATOR FA7612N-TE1	GFA7612NTE10
IC351	IC CXL1502M-T1	GCXL1502MT1*
IC352	IC CXA1200BQ	GCXA1200BQ**
IC451	IC(OPERATIONNAL AMPLIFIER) BA4558F	GBA4558FT1**
IC452	IC CX20037A	GCX20037A***
IC531	IC CXA1203M-T1	GCXA1203MT1*
IC532	IC/6DB AMP MM1031XM TI	GMM1031XMR**
	COILS	
L301	INDUCTOR 100UH J or	1170982T
	LEAD INDUCTOR 100UH J	LLAXJBVFS101
L302	INDUCTOR 82UH J or	1170981T
	LEAD INDUCTOR 82UH J	LLAXJBVFS820
L330	POWER INDUCTOR RCH-875 22UH	LLBD00PSF005
L331	POWER INDUCTOR RCH-875 10UH	LLBD00PSF004
L332	POWER INDUCTOR RCR-875D 22UH	LLBD00PSF006
L333	COIL RCH-664 or	117D806
	INDUCTOR 56UH	117B960
L334	COIL RCH-664 or	117D806
	INDUCTOR 56UH	117B960
L335	COIL RCH-664 or	117D806
	INDUCTOR 56UH	117B960
L336	INDUCTOR 100UH J or	1170982T
	LEAD INDUCTOR 100UH J	LLAXJBVFS101
L337	INDUCTOR 100UH J or	1170982T
	LEAD INDUCTOR 100UH J	LLAXJBVFS101
L338	INDUCTOR 100UH J or	1170982T
	LEAD INDUCTOR 100UH J	LLAXJBVFS101
L351	MAGNETIC SHIELD INDUCTOR 56UH K	LLARKETTE560
L352	MAGNETIC SHIELD INDUCTOR 33UH K	LLARKETTE330
L353	INDUCTOR 39UH J or	1170977T
	LEAD INDUCTOR 39UH J	LLAXJBVFS390
L354	INDUCTOR 100UH J or	1170982T
	LEAD INDUCTOR 100UH J	LLAXJBVFS101
L357	CHIP INDUCTOR 100UH J or	1170742
	CHIP INDUCTOR 100UH J 3225 or	LLACJE8FS101
	CHIP INDUCTOR 100UH J	1170756
L358	INDUCTOR 10UH J or	1170970T
	LEAD INDUCTOR 10UH J	LLAXJBVFS100
L451	CHIP INDUCTOR 220UH J or	1170794
	CHIP INDUCTOR 220UH J 3225 or	LLACJE8FS221
	CHIP INDUCTOR 220UH J	1170791
L501	CHIP INDUCTOR 8.2UH J	5170010
L502	CHIP INDUCTOR 82UH J or	1170741
	CHIP INDUCTOR 82UH J 3225 or	LLACJE8FS820
	CHIP INDUCTOR 82UH J	1170755
L503	CHIP INDUCTOR 120UH J or	1170743
	CHIP INDUCTOR 120UH J 3225 or	LLACJE8FS121

Ref.No.	Description	PartNo.
	CHIP INDUCTOR 120UH J	1170757
L504	CHIP INDUCTOR 220UH J or	1170794
	CHIP INDUCTOR 220UH J 3225 or	LLACJE8FS221
	CHIP INDUCTOR 220UH J	1170791
L505	INDUCTOR 100UH J or	1170982T
	LEAD INDUCTOR 100UH J	LLAXJBVFS101
L506	CHIP INDUCTOR 150UH J or	1170792
	CHIP INDUCTOR 150UH J 3225 or	LLACJE8FS151
	CHIP INDUCTOR 150UH J	1170789
L507	CHIP INDUCTOR 100UH J or	1170742
	CHIP INDUCTOR 100UH J 3225 or	LLACJE8FS101
	CHIP INDUCTOR 100UH J	1170756
L508	INDUCTOR 100UH J or	1170982T
	LEAD INDUCTOR 100UH J	LLAXJBVFS101
L509	INDUCTOR 4.7UH J	1170966T
L510	INDUCTOR 470UH J or	1170990T
	LEAD INDUCTOR 470UH J	LLAXJBVFS471
L511	INDUCTOR 330UH J or	1170988T
	LEAD INDUCTOR 330UH J	LLAXJBVFS331
L512	INDUCTOR 39UH J or	1170977T
	LEAD INDUCTOR 39UH J	LLAXJBVFS390
L513	INDUCTOR 330UH J or	1170988T
	LEAD INDUCTOR 330UH J	LLAXJBVFS331
L514	INDUCTOR 180UH J or	1170985T
	LEAD INDUCTOR 180UH J	LLAXJBVFS181
L515	INDUCTOR 33UH J or	1170976T
	LEAD INDUCTOR 33UH J	LLAXJBVFS330
L516	INDUCTOR 120UH J or	1170983T
	LEAD INDUCTOR 120UH J	LLAXJBVFS121
L518	INDUCTOR 10UH J or	1170970T
	LEAD INDUCTOR 10UH J	LLAXJBVFS100
L531	INDUCTOR 100UH J or	1170982T
	LEAD INDUCTOR 100UH J	LLAXJBVFS101
L532	INDUCTOR 100UH J or	1170982T
	LEAD INDUCTOR 100UH J	LLAXJBVFS101
	TRANSISTORS	
Q301	CHIP 2SC4081(R) or	QSC4081T106R
	CHIP 2SC4081(S)	QSC4081T106S
Q302	CHIP 2SC4081(R) or	QSC4081T106R
	CHIP 2SC4081(S)	QSC4081T106S
Q303	CHIP 2SC4081(R) or	QSC4081T106R
	CHIP 2SC4081(S)	QSC4081T106S
Q304	CHIP 2SC4081(R) or	QSC4081T106R
	CHIP 2SC4081(S)	QSC4081T106S
Q305	CHIP 2SA1576(R) or	QSA1576T106R
	CHIP 2SA1576(S)	QSA1576T106S
Q331	CHIP 2SC4081(R) or	QSC4081T106R
	CHIP 2SC4081(S)	QSC4081T106S
Q332	CHIP SAH02-V1	QSAH02V10000
Q351	CHIP 2SA1576(R) or	QSA1576T106R
	CHIP 2SA1576(S)	QSA1576T106S
Q352	CHIP 2SC4081(R) or	QSC4081T106R
	CHIP 2SC4081(S)	QSC4081T106S
Q353	CHIP 2SC4098(AP) or	QC4098T106AP
	CHIP 2SC4098(AQ)	QC4098T106AQ
Q354	CHIP 2SC4098(AP) or	QC4098T106AP
	CHIP 2SC4098(AQ)	QC4098T106AQ
Q355	CHIP 2SC4081(R) or	QSC4081T106R
	CHIP 2SC4081(S)	QSC4081T106S
Q356	CHIP 2SA1576(R) or	QSA1576T106R

Ref.No.	Description	PartNo.
	CHIP 2SA1576(S)	QSA1576T106S
Q357	CHIP 2SC4098(AP) or	QC4098T106AP
	CHIP 2SC4098(AQ)	QC4098T106AQ
Q358	CHIP 2SC4098(AP) or	QC4098T106AP
	CHIP 2SC4098(AQ)	QC4098T106AQ
Q359	CHIP 2SC4081(R) or	QSC4081T106R
	CHIP 2SC4081(S)	QSC4081T106S
Q360	CHIP 2SC4081(R) or	QSC4081T106R
	CHIP 2SC4081(S)	QSC4081T106S
Q361	CHIP 2SC4081(R) or	QSC4081T106R
	CHIP 2SC4081(S)	QSC4081T106S
Q362	CHIP 2SA1576(R) or	QSA1576T106R
	CHIP 2SA1576(S)	QSA1576T106S
Q363	CHIP 2SB1132(Q) or	QB1132T101Q*
	CHIP 2SB1132(R)	QB1132T101R*
Q451	CHIP 2SC4081(R) or	QSC4081T106R
	CHIP 2SC4081(S)	QSC4081T106S
Q452	CHIP 2SC4081(R) or	QSC4081T106R
	CHIP 2SC4081(S)	QSC4081T106S
Q453	CHIP 2SC4081(R) or	QSC4081T106R
	CHIP 2SC4081(S)	QSC4081T106S
Q454	CHIP 2SA1576(R) or	QSA1576T106R
	CHIP 2SA1576(S)	QSA1576T106S
Q455	CHIP 2SC4081(R) or	QSC4081T106R
	CHIP 2SC4081(S)	QSC4081T106S
Q456	CHIP FET 2SK1332(2) or	Q2SK13322TL*
	CHIP FET 2SK1332(3) or	Q2SK13323TL*
	CHIP FET 2SK1332(4)	Q2SK13324TL*
Q457	CHIP 2SA1576(R) or	QSA1576T106R
	CHIP 2SA1576(S)	QSA1576T106S
Q458	CHIP 2SC4081(R) or	QSC4081T106R
	CHIP 2SC4081(S)	QSC4081T106S
Q459	CHIP 2SC4081(R) or	QSC4081T106R
	CHIP 2SC4081(S)	QSC4081T106S
Q460	CHIP FET 2SK94(X1) or	Q2SK94T1X1**
	CHIP FET 2SK94(X2) or	Q2SK94T1X2**
	CHIP FET 2SK94(X3) or	Q2SK94T1X3**
	CHIP FET 2SK209(BL) or	QK209BLTE85L
	CHIP FET 2SK209(GR) or	QK209GRTE85L
	CHIP FET 2SK209(Y)	QSK209YTE85L
Q501	CHIP 2SA1576(R) or	QSA1576T106R
	CHIP 2SA1576(S)	QSA1576T106S
Q502	CHIP 2SC4098(AP) or	QC4098T106AP
	CHIP 2SC4098(AQ)	QC4098T106AQ
Q503	CHIP 2SC4081(R) or	QSC4081T106R
	CHIP 2SC4081(S)	QSC4081T106S
Q504	CHIP 2SA1576(R) or	QSA1576T106R
	CHIP 2SA1576(S)	QSA1576T106S
Q505	CHIP 2SA1576(R) or	QSA1576T106R
	CHIP 2SA1576(S)	QSA1576T106S
Q506	CHIP 2SC4081(R) or	QSC4081T106R
	CHIP 2SC4081(S)	QSC4081T106S
Q507	CHIP 2SA1576(R) or	QSA1576T106R
	CHIP 2SA1576(S)	QSA1576T106S
Q508	CHIP 2SC4081(R) or	QSC4081T106R
	CHIP 2SC4081(S)	QSC4081T106S
Q509	CHIP 2SC4098(AP) or	QC4098T106AP
	CHIP 2SC4098(AQ)	QC4098T106AQ
Q510	CHIP 2SA1576(R) or	QSA1576T106R
	CHIP 2SA1576(S)	QSA1576T106S

Ref.No.	Description	PartNo.
Q511	CHIP 2SA1576(R) or	QSA1576T106R
	CHIP 2SA1576(S)	QSA1576T106S
Q512	CHIP 2SC4098(AP) or	QC4098T106AP
	CHIP 2SC4098(AQ)	QC4098T106AQ
Q513	CHIP 2SC4081(R) or	QSC4081T106R
	CHIP 2SC4081(S)	QSC4081T106S
Q514	CHIP 2SC4081(R) or	QSC4081T106R
	CHIP 2SC4081(S)	QSC4081T106S
Q531	CHIP 2SC4081(R) or	QSC4081T106R
	CHIP 2SC4081(S)	QSC4081T106S
Q532	CHIP 2SC4098(AP) or	QC4098T106AP
	CHIP 2SC4098(AQ)	QC4098T106AQ
QR301	CHIP RES. BUILT-IN DTC124EU	QTC124EUT106
QR302	CHIP RES. BUILT-IN DTC124EU	QTC124EUT106
QR303	CHIP RES. BUILT-IN DTC124EU	QTC124EUT106
QR304	CHIP DTC144EU	QTC144EUT106
QR331	CHIP DTA144EU	QTA144EUT106
QR332	CHIP DTC144EU	QTC144EUT106
QR351	CHIP DTC144EU	QTC144EUT106
QR352	CHIP DTC144EU	QTC144EUT106
QR353	CHIP DTC144EU	QTC144EUT106
QR451	CHIP DTC144EU	QTC144EUT106
QR501	CHIP DTC144EU	QTC144EUT106
QR502	CHIP DTA144EU	QTA144EUT106
QR531	CHIP DTA144EU	QTA144EUT106
QR532	CHIP DTA144EU	QTA144EUT106
QR533	CHIP DTC144EU	QTC144EUT106
QR534	CHIP DTC144EU	QTC144EUT106
QR535	CHIP IMH2	QIMH2T110***
	RESISTORS	
R301	CHIP 1/16W J 100KΩ	RCXGJR8Z0104
R302	CHIP 1/16W J 100KΩ	RCXGJR8Z0104
R303	CHIP 1/16W J 4.3KΩ	RCXGJR8Z0432
R304	CHIP 1/16W J 2.4KΩ	RCXGJR8Z0242
R305	CHIP 1/16W J 10KΩ	RCXGJR8Z0103
R306	CHIP 1/16W J 10KΩ	RCXGJR8Z0103
R307	CHIP 1/16W J 10KΩ	RCXGJR8Z0103
R308	CHIP 1/16W J 1KΩ	RCXGJR8Z0102
R309	CHIP 1/16W J 3.6KΩ	RCXGJR8Z0362
R310	CHIP 1/16W J 270Ω	RCXGJR8Z0271
R311	CHIP 1/16W J 240Ω	RCXGJR8Z0241
R312	CHIP 1/16W J 10KΩ	RCXGJR8Z0103
R313	CHIP 1/16W J 3.3KΩ	RCXGJR8Z0332
R314	CHIP 1/16W J 3.3KΩ	RCXGJR8Z0332
R315	CHIP 1/16W J 3.9KΩ	RCXGJR8Z0392
R316	CHIP 1/16W J 5.6KΩ	RCXGJR8Z0562
R317	CHIP 1/10W J 47Ω	134F470C
R318	CHIP 1/16W J 1KΩ	RCXGJR8Z0102
R319	CHIP 1/16W J 1KΩ	RCXGJR8Z0102
R320	CHIP 1/16W J 1.2KΩ	RCXGJR8Z0122
R321	CHIP 1/16W J 33KΩ	RCXGJR8Z0333
R322	CHIP 1/16W J 10KΩ	RCXGJR8Z0103
R323	CHIP 1/16W F 100KΩ	RCXGFR8Z0104
R326	CHIP 1/16W J 1.2KΩ	RCXGJR8Z0122
R327	CHIP 1/16W J 4.7KΩ	RCXGJR8Z0472
R328	CHIP 1/16W J 10KΩ	RCXGJR8Z0103
R329	CHIP 1/10W J 560Ω	134F561C
R330	CHIP 1/16W J 22KΩ	RCXGJR8Z0223
R331	CHIP 1/16W J 2.2KΩ	RCXGJR8Z0222
R332	CHIP 1/16W J 1KΩ	RCXGJR8Z0102

Ref.No.	Description	PartNo.
R333	CHIP 1/16W J 100Ω	RCXGJR8Z0101
R334	CHIP 1/16W J 330KΩ	RCXGJR8Z0334
R335	CHIP 1/16W J 16KΩ	RCXGJR8Z0163
R336	CHIP 1/16W J 180KΩ	RCXGJR8Z0184
R337	CHIP 1/16W J 47KΩ	RCXGJR8Z0473
R338	CHIP 1/16W J 47KΩ	RCXGJR8Z0473
R339	CHIP 1/16W J 220Ω	RCXGJR8Z0221
R345	CHIP 1/16W J 330Ω	RCXGJR8Z0331
R346	CHIP 1/16W J 1MΩ	RCXGJR8Z0105
R347	CHIP 1/16W J 150Ω	RCXGJR8Z0151
R348	CHIP 1/16W J 10KΩ	RCXGJR8Z0103
R349	CHIP 1/16W J 1.2KΩ	RCXGJR8Z0122
R350	CHIP 1/16W J 120Ω	RCXGJR8Z0121
R351	CHIP 1/16W J 1MΩ	RCXGJR8Z0105
R352	CHIP 1/16W J 1MΩ	RCXGJR8Z0105
R353	CHIP 1/16W J 1MΩ	RCXGJR8Z0105
R354	CHIP 1/16W J 4.7KΩ	RCXGJR8Z0472
R355	CHIP 1/16W J 1.2KΩ	RCXGJR8Z0122
R356	CHIP 1/16W J 10KΩ	RCXGJR8Z0103
R357	CHIP 1/16W J 15KΩ	RCXGJR8Z0153
R358	CHIP 1/16W J 680KΩ	RCXGJR8Z0684
R359	CHIP 1/16W J 68KΩ	RCXGJR8Z0683
R360	CHIP 1/16W G 3.3KΩ	RCXGGR8Z0332
R361	CHIP 1/16W J 10KΩ	RCXGJR8Z0103
R362	CHIP 1/16W J 4.7KΩ	RCXGJR8Z0472
R363	CHIP 1/16W J 120Ω	RCXGJR8Z0121
R364	CHIP 1/16W J 560Ω	RCXGJR8Z0561
R365	CHIP 1/16W J 1KΩ	RCXGJR8Z0102
R366	CHIP 1/16W J 1KΩ	RCXGJR8Z0102
R367	CHIP 1/16W J 4.7KΩ	RCXGJR8Z0472
R368	CHIP 1/16W J 1KΩ	RCXGJR8Z0102
R369	CHIP 1/16W J 2.2KΩ	RCXGJR8Z0222
R370	CHIP 1/16W G 1KΩ	RCXGGR8Z0102
R371	CHIP 1/16W G 470Ω	RCXGGR8Z0471
R372	CHIP 1/16W J 2.7KΩ	RCXGJR8Z0272
R373	CHIP 1/16W J 6.8KΩ	RCXGJR8Z0682
R374	CHIP 1/16W J 1.2KΩ	RCXGJR8Z0122
R375	CHIP 1/16W J 680Ω	RCXGJR8Z0681
R376	CHIP 1/16W J 2.7KΩ	RCXGJR8Z0272
R377	CHIP 1/16W J 1.5KΩ	RCXGJR8Z0152
R378	CHIP 1/16W J 4.7KΩ	RCXGJR8Z0472
R379	CHIP 1/16W J 1KΩ	RCXGJR8Z0102
R380	CHIP 1/16W J 6.8KΩ	RCXGJR8Z0682
R381	CHIP 1/16W J 4.7KΩ	RCXGJR8Z0472
R382	CHIP 1/16W J 680Ω	RCXGJR8Z0681
R383	CHIP 1/16W J 3.9KΩ	RCXGJR8Z0392
R384	CHIP 1/16W J 680Ω	RCXGJR8Z0681
R385	CHIP 1/16W J 10KΩ	RCXGJR8Z0103
R386	CHIP 1/16W J 820Ω	RCXGJR8Z0821
R387	CHIP 1/16W J 1KΩ	RCXGJR8Z0102
R388	CHIP 1/16W J 2.2KΩ	RCXGJR8Z0222
R389	CHIP 1/16W J 470KΩ	RCXGJR8Z0474
R390	CHIP 1/16W J 2.2KΩ	RCXGJR8Z0222
R391	CHIP 1/16W J 2.4KΩ	RCXGJR8Z0242
R392	CHIP 1/16W J 2.2KΩ	RCXGJR8Z0222
R393	CHIP 1/16W J 1.5KΩ	RCXGJR8Z0152
R394	CHIP 1/16W J 10KΩ	RCXGJR8Z0103
R395	CHIP 1/16W J 1.8KΩ	RCXGJR8Z0182
R396	CHIP 1/16W J 10KΩ	RCXGJR8Z0103
R397	CHIP 1/16W J 10KΩ	RCXGJR8Z0103

Ref.No.	Description	PartNo.
R398	CHIP 1/16W J 100KΩ	RCXGJR8Z0104
R399	CHIP 1/16W J 10KΩ	RCXGJR8Z0103
R400	CHIP 1/16W J 1.5KΩ	RCXGJR8Z0152
R401	CHIP 1/16W J 68Ω	RCXGJR8Z0680
R402	CHIP 1/16W J 3.9KΩ	RCXGJR8Z0392
R405	CHIP 1/16W J 6.8KΩ	RCXGJR8Z0682
R406	CHIP 1/16W J 2.2KΩ	RCXGJR8Z0222
R407	CHIP 1/16W J 3.3KΩ	RCXGJR8Z0332
R408	CHIP 1/16W J 820Ω	RCXGJR8Z0821
R409	CHIP 1/16W J 820Ω	RCXGJR8Z0821
R410	CHIP 1/16W J 2.2KΩ	RCXGJR8Z0222
R411	CHIP 1/16W J 1KΩ	RCXGJR8Z0102
R412	CHIP 1/16W J 1.5KΩ	RCXGJR8Z0152
R413	CHIP 1/16W J 4.7KΩ	RCXGJR8Z0472
R414	CHIP 1/16W J 1KΩ	RCXGJR8Z0102
R416	CHIP 1/16W J 1KΩ	RCXGJR8Z0102
R417	CHIP 1/16W J 2.2KΩ	RCXGJR8Z0222
R418	CHIP 1/16W J 100KΩ	RCXGJR8Z0104
R419	CHIP 1/16W J 3.3KΩ	RCXGJR8Z0332
R420	CHIP 1/16W J 100KΩ	RCXGJR8Z0104
R421	CHIP 1/16W J 100KΩ	RCXGJR8Z0104
R422	CHIP 1/16W J 3.3KΩ	RCXGJR8Z0332
R423	CHIP 1/16W J 220KΩ	RCXGJR8Z0224
R425	CHIP 1/16W J 1.8KΩ	RCXGJR8Z0182
R426	CHIP 1/16W J 10KΩ	RCXGJR8Z0103
R427	CHIP 1/16W J 2.7KΩ	RCXGJR8Z0272
R428	CHIP 1/16W J 3.3KΩ	RCXGJR8Z0332
R429	CHIP 1/16W J 3.3KΩ	RCXGJR8Z0332
R430	CHIP 1/16W J 2.7KΩ	RCXGJR8Z0272
R431	CHIP 1/16W J 680Ω	RCXGJR8Z0681
R432	CHIP 1/16W J 2.2KΩ	RCXGJR8Z0222
R433	CHIP 1/16W J 3.9KΩ	RCXGJR8Z0392
R434	CHIP 1/16W J 12KΩ	RCXGJR8Z0123
R435	CHIP 1/16W J 8.2KΩ	RCXGJR8Z0822
R436	CHIP 1/16W J 1KΩ	RCXGJR8Z0102
R437	CHIP 1/16W J 270Ω	RCXGJR8Z0271
R438	CHIP 1/16W J 470Ω	RCXGJR8Z0471
R439	CHIP 1/16W J 120Ω	RCXGJR8Z0121
R440	CHIP 1/16W J 1.2KΩ	RCXGJR8Z0122
R441	CHIP 1/16W J 22KΩ	RCXGJR8Z0223
R442	CHIP 1/16W J 470Ω	RCXGJR8Z0471
R443	CHIP 1/16W J 2.2KΩ	RCXGJR8Z0222
R444	CHIP 1/16W J 68KΩ	RCXGJR8Z0683
R445	CHIP 1/16W J 47KΩ	RCXGJR8Z0473
R446	CHIP 1/16W J 6.8KΩ	RCXGJR8Z0682
R447	CHIP 1/16W F 820Ω	RCXGFR8Z0821
R448	CHIP 1/16W G 820Ω	RCXGGR8Z0821
R449	CHIP 1/16W J 8.2KΩ	RCXGJR8Z0822
R450	CHIP 1/16W J 330KΩ	RCXGJR8Z0334
R451	CHIP 1/16W J 10KΩ	RCXGJR8Z0103
R452	CHIP 1/16W J 3.3KΩ	RCXGJR8Z0332
R453	CHIP 1/16W J 3.3KΩ	RCXGJR8Z0332
R454	CHIP 1/16W J 3.3KΩ	RCXGJR8Z0332
R455	CHIP 1/16W J 4.7KΩ	RCXGJR8Z0472
R456	CHIP 1/16W J 4.7KΩ	RCXGJR8Z0472
R457	CHIP 1/16W J 4.7KΩ	RCXGJR8Z0472
R458	CHIP 1/16W J 2.7KΩ	RCXGJR8Z0272
R459	CHIP 1/16W J 2.2KΩ	RCXGJR8Z0222
R460	CHIP 1/16W J 2.2KΩ	RCXGJR8Z0222
R461	CHIP 1/16W J 15KΩ	RCXGJR8Z0153

Ref.No.	Description	PartNo.
R462	CHIP 1/16W J 27KΩ	RCXGJR8Z0273
R463	CHIP 1/16W J 1KΩ	RCXGJR8Z0102
R464	CHIP 1/16W J 1KΩ	RCXGJR8Z0102
R465	CHIP 1/16W J 2.2KΩ	RCXGJR8Z0222
R466	CHIP 1/16W J 1MΩ	RCXGJR8Z0105
R467	CHIP 1/16W J 100KΩ	RCXGJR8Z0104
R468	CHIP 1/16W J 15KΩ	RCXGJR8Z0153
R469	CHIP 1/16W J 18KΩ	RCXGJR8Z0183
R470	CHIP 1/16W J 18KΩ	RCXGJR8Z0183
R471	CHIP 1/16W J 18KΩ	RCXGJR8Z0183
R474	CHIP 1/16W J 10KΩ	RCXGJR8Z0103
R475	CHIP 1/16W J 2.2KΩ	RCXGJR8Z0222
R476	CHIP 1/16W J 470Ω	RCXGJR8Z0471
R477	CHIP 1/16W J 220Ω	RCXGJR8Z0221
R478	CHIP 1/16W J 470Ω	RCXGJR8Z0471
R479	CHIP 1/16W J 470Ω	RCXGJR8Z0471
R481	CHIP 1/16W J 470Ω	RCXGJR8Z0471
R482	CHIP 1/16W J 1.5KΩ	RCXGJR8Z0152
R483	CHIP 1/16W J 4.3KΩ	RCXGJR8Z0432
R484	CHIP 1/16W J 560Ω	RCXGJR8Z0561
R485	CHIP 1/16W J 560Ω	RCXGJR8Z0561
R486	CHIP 1/16W J 47KΩ	RCXGJR8Z0473
R487	CHIP 1/16W J 10KΩ	RCXGJR8Z0103
R488	CHIP 1/16W J 2.2KΩ	RCXGJR8Z0222
R489	CHIP 1/16W J 2.2KΩ	RCXGJR8Z0222
R490	CHIP 1/16W J 560Ω	RCXGJR8Z0561
R491	CHIP 1/16W J 4.7KΩ	RCXGJR8Z0472
R492	CHIP 1/16W J 1KΩ	RCXGJR8Z0102
R493	CHIP 1/16W J 3.3KΩ	RCXGJR8Z0332
R494	CHIP 1/16W J 47KΩ	RCXGJR8Z0473
R495	CHIP 1/16W J 22KΩ	RCXGJR8Z0223
R496	CHIP 1/16W J 33KΩ	RCXGJR8Z0333
R497	CHIP 1/16W J 2.2KΩ	RCXGJR8Z0222
R498	CHIP 1/16W J 820Ω	RCXGJR8Z0821
R499	CHIP 1/16W J 330Ω	RCXGJR8Z0331
R500	CHIP 1/16W J 1KΩ	RCXGJR8Z0102
R501	CHIP 1/16W J 680Ω	RCXGJR8Z0681
R502	CHIP 1/16W J 1KΩ	RCXGJR8Z0102
R503	CHIP 1/16W J 470Ω	RCXGJR8Z0471
R504	CHIP 1/16W J 0Ω	RCXGJR8Z0000
R505	CHIP 1/16W J 1.5KΩ	RCXGJR8Z0152
R506	CHIP 1/16W J 47KΩ	RCXGJR8Z0473
R507	CHIP 1/16W J 10KΩ	RCXGJR8Z0103
R508	CHIP 1/16W J 820Ω	RCXGJR8Z0821
R509	CHIP 1/16W J 68Ω	RCXGJR8Z0680
R510	CHIP 1/16W J 470Ω	RCXGJR8Z0471
R511	CHIP 1/16W J 2.7KΩ	RCXGJR8Z0272
R512	CHIP 1/16W J 1.8KΩ	RCXGJR8Z0182
R513	CHIP 1/16W J 1.5KΩ	RCXGJR8Z0152
R514	CHIP 1/16W J 1.8KΩ	RCXGJR8Z0182
R515	CHIP 1/16W J 2.2KΩ	RCXGJR8Z0222
R516	CHIP 1/16W J 1.5KΩ	RCXGJR8Z0152
R517	CHIP 1/16W J 150Ω	RCXGJR8Z0151
R518	CHIP 1/16W J 2.2KΩ	RCXGJR8Z0222
R519	CHIP 1/16W J 1.5KΩ	RCXGJR8Z0152
R520	CHIP 1/16W J 1KΩ	RCXGJR8Z0102
R524	CHIP 1/16W J 1KΩ	RCXGJR8Z0102
R525	CHIP 1/16W J 1KΩ	RCXGJR8Z0102
R526	CHIP 1/16W J 47KΩ	RCXGJR8Z0473
R527	CHIP 1/16W J 22KΩ	RCXGJR8Z0223

Ref.No.	Description	PartNo.
R528	CHIP 1/16W J 24KΩ	RCXGJR8Z0243
R531	CHIP 1/16W J 1KΩ	RCXGJR8Z0102
R532	CHIP 1/16W J 8.2KΩ	RCXGJR8Z0822
R533	CHIP 1/16W J 2.2KΩ	RCXGJR8Z0222
R534	CHIP 1/16W J 1KΩ	RCXGJR8Z0102
R535	CHIP 1/16W J 1.5KΩ	RCXGJR8Z0152
R536	CHIP 1/16W J 3.9KΩ	RCXGJR8Z0392
R538	CHIP 1/16W J 1.2KΩ	RCXGJR8Z0122
R539	CHIP 1/16W J 100KΩ	RCXGJR8Z0104
R540	CHIP 1/16W J 100KΩ	RCXGJR8Z0104
R541	CHIP 1/16W J 100KΩ	RCXGJR8Z0104
R542	CHIP 1/16W F 100KΩ	RCXGFR8Z0104
R543	CHIP 1/16W J 4.7KΩ	RCXGJR8Z0472
R544	CHIP 1/16W J 2.2KΩ	RCXGJR8Z0222
R545	CHIP 1/16W J 100KΩ	RCXGJR8Z0104
R546	CHIP 1/16W J 4.7KΩ	RCXGJR8Z0472
R547	CHIP 1/16W J 1KΩ	RCXGJR8Z0102
R548	CHIP 1/16W J 1KΩ	RCXGJR8Z0102
R549	CHIP 1/16W J 10KΩ	RCXGJR8Z0103
R550	CHIP 1/16W J 2.2KΩ	RCXGJR8Z0222
R551	CHIP 1/16W J 10KΩ	RCXGJR8Z0103
R553	CHIP 1/16W J 3.3KΩ	RCXGJR8Z0332
R554	CHIP 1/16W J 10KΩ	RCXGJR8Z0103
R556	CHIP 1/16W J 10KΩ	RCXGJR8Z0103
R557	CHIP 1/10W J 75Ω	134F750C
R562	CHIP 1/16W J 10KΩ	RCXGJR8Z0103
R563	CHIP 1/16W J 3.3KΩ	RCXGJR8Z0332
R570	CHIP 1/16W J 150KΩ	RCXGJR8Z0154
	FILTERS	
T351	CHIP FILTER 5.898MHZ TRAP or	FAZ585CMM001
	CHIP FILTER 2568-036	FAE585CSF001
T352	CHIP FILTER 4.43MHZ BPF or	FAB445CMM001
	CHIP FILTER 2568-037	FAB445CSF001
T451	CHIP FILTER 1.5MHZ BPF or	FAB155CMM001
	CHIP FILTER 2570-022	FAB155CSF002
T531	CHIP FILTER 4.43MHZ BPF(J0G) or	FAB445CMM002
	CHIP FILTER 2570-041	FAB445CSF003
	VOLUMES	
VR301	CHIP P.O.T. 50KΩ B X	238N269C
VR331	CHIP P.O.T. 1KΩ B X	238N264C
VR332	CHIP P.O.T. 10KΩ B X	238N267C
VR333	CHIP P.O.T. 10KΩ B X	238N267C
VR351	CHIP P.O.T. 10KΩ B X	238N267C
VR352	CHIP P.O.T. 50KΩ B X	238N269C
VR353	CHIP P.O.T. 2KΩ B X	238N265C
VR354	CHIP P.O.T. 2KΩ B X	238N265C
VR355	CHIP P.O.T. 5KΩ B X	238N266C
VR356	CHIP P.O.T. 2KΩ B X	238N265C
VR451	CHIP P.O.T. 2KΩ B X	238N265C
VR452	CHIP P.O.T. 10KΩ B X	238N267C
VR453	CHIP P.O.T. 20KΩ B X	238N268C
VR501	CHIP P.O.T. 2KΩ B X	238N265C
VR502	CHIP P.O.T. 500Ω B X	238N263C
VR525	CHIP P.O.T. 10KΩ B X	238N267C
VR526	CHIP P.O.T. 500KΩ B X	238N272C
VR527	CHIP P.O.T. 10KΩ B X	238N267C
VR528	CHIP P.O.T. 200KΩ B X	238N271C
VR529	CHIP P.O.T. 10KΩ B X	238N267C
VR531	CHIP P.O.T. 10KΩ B X	238N267C
VR532	CHIP P.O.T. 5KΩ B X	238N266C

Ref.No.	Description	PartNo.
	MISCELLANEOUS	
CP332	IC PROTECTOR ICP-F25	179F842
JK531	AV JACK CMS5008-0401	1700662
TP301	CHECKER CHIP 2.0-1.25	170A354C
TP302	CHECKER CHIP 2.0-1.25	170A354C
TP331	CHECKER CHIP 2.0-1.25	170A354C
TP332	CHECKER CHIP RCU00000C	XU0C000AL001
TP333	CHECKER CHIP 2.0-1.25	170A354C
TP351	CHECKER CHIP 2.0-1.25	170A354C
TP352	CHECKER CHIP 2.0-1.25	170A354C
TP353	CHECKER CHIP 2.0-1.25	170A354C
TP354	CHECKER CHIP 2.0-1.25	170A354C
TP355	CHECKER CHIP 2.0-1.25	170A354C
TP356	CHECKER CHIP 2.0-1.25	170A354C
TP357	CHECKER CHIP 2.0-1.25	170A354C
TP451	CHECKER CHIP 2.0-1.25	170A354C
TP501	CHECKER CHIP 2.0-1.25	170A354C
TP502	CHECKER CHIP 2.0-1.25	170A354C
TP503	CHECKER CHIP 2.0-1.25	170A354C
TP504	CHECKER CHIP 2.0-1.25	170A354C
TP505	CHECKER CHIP 2.0-1.25	170A354C
TP506	CHECKER CHIP 2.0-1.25	170A354C
TP525	CHECKER CHIP 2.0-1.25	170A354C
TP526	CHECKER CHIP 2.0-1.25	170A354C
TP527	CHECKER CHIP 2.0-1.25	170A354C
TP531	CHECKER CHIP 2.0-1.25	170A354C
X351	X'TAL 4.43MHZ	FXB445LDS001
⚠	P.C.B.	BC1580G02001

DRV PCB ASSEMBLY 0VSA04345
Consists of the following:

Ref.No.	Description	PartNo.
	DRV-1 PCB ASSEMBLY	not available
	DRV-2 PCB ASSEMBLY	not available
FFC2	FFC WIRE 14P FFC 2:DRIVER 1	WX3914SZ3404
FFC3	FFC WIRE 12P FFC 3:DRIVER 2	WX3912SZ3404
FFC6	FFC WIRE 8P FFC 6:CAMERA CONT	WX3908SZ3410
⚠	P.C.B. C1580/DRIVER	BC1580G02009

DRV-1 PCB ASS'Y

Ref.No.	Description	PartNo.
	CONNECTORS	
CN-18	CONNECTOR(B TO B) 8P POST 6-175642-8	JC42A08APH0C
CN-19	CONNECTOR(B TO B)12P POST 7-175643-2	JC43A12APH0C
	DIODES	
D901	LED(ORANGE) LT1S53A	ELT1S53A0000
D902	LED LT1E53A	ELT1E53A0000
D903	CHIP DIODE DAN202U	ADAN202UT106
D906	CHIP DIODE DAN202U	ADAN202UT106
D907	CHIP DIODE DA115	ADA115T106**
D908	CHIP DIODE DAN202U	ADAN202UT106
D909	CHIP DIODE DAN202U	ADAN202UT106
D913	CHIP DIODE DA115	ADA115T106**
R901	CHIP 1/10W J 330Ω	134F331C
R902	CHIP 1/10W J 330Ω	134F331C
	SWITCHES	
SW901	PUSH SWITCH EVQ-QHL 01W or	SST0101MS006
	PUSH SWITCH SKHUPA	SST0101AL008

Ref.No.	Description	PartNo.
SW902	PUSH SWITCH EVQ-QHL 01W or	SST0101MS006
	PUSH SWITCH SKHUPA	SST0101AL008
SW903	PUSH SWITCH EVQ-QHL 01W or	SST0101MS006
	PUSH SWITCH SKHUPA	SST0101AL008
SW904	PUSH SWITCH EVQ-QHL 01W or	SST0101MS006
	PUSH SWITCH SKHUPA	SST0101AL008
SW905	PUSH SWITCH EVQ-QHL 01W or	SST0101MS006
	PUSH SWITCH SKHUPA	SST0101AL008
SW906	PUSH SWITCH EVQ-QHL 01W or	SST0101MS006
	PUSH SWITCH SKHUPA	SST0101AL008
SW907	PUSH SWITCH EVQ-QHL 01W or	SST0101MS006
	PUSH SWITCH SKHUPA	SST0101AL008
SW908	PUSH SWITCH EVQ-QHL 01W or	SST0101MS006
	PUSH SWITCH SKHUPA	SST0101AL008
SW909	PUSH SWITCH EVQ-QHL 01W or	SST0101MS006
	PUSH SWITCH SKHUPA	SST0101AL008
SW910	PUSH SWITCH EVQ-QHL 01W or	SST0101MS006
	PUSH SWITCH SKHUPA	SST0101AL008
SW911	PUSH SWITCH EVQ-QHL 01W or	SST0101MS006
	PUSH SWITCH SKHUPA	SST0101AL008
SW913	SLIDE SWITCH ESD165206	SSS0102MS008
SW914	PUSH SWITCH SKHUPH	SST0101AL007
SW915	PUSH SWITCH SKHUPH	SST0101AL007
SW916	SLIDE SWITCH SSSS71	SSS0102AL007
SW917	SLIDE SWITCH SSSS71	SSS0102AL007

DRV-2 PCB ASS'Y

Ref.No.	Description	PartNo.
	CAPACITORS	
C851	CHIP ELECTROLYTIC 33μF/16V M	122Z225
C852	CHIP ELECTROLYTIC 33μF/16V M	122Z225
C853	CHIP ELECTROLYTIC 33μF/16V M	122Z225
C854	CHIP CERAMIC B K 0.001μF/50V	12B3102C
C855	CHIP CERAMIC B K 0.01μF/50V	12B3103C
C856	TANTAL 100μF/10V M	1224107
C857	CHIP ELECTROLYTIC 100μF/10V M	122Z786C
C859	CHIP CERAMIC B K 0.0047μF/50V	12B3472C
C860	CHIP ELECTROLYTIC (NP) 10μF/10V M	122Z779C
C861	CHIP CERAMIC B K 0.1μF/25V or	72B2104C
	CHIP CERAMIC B K 0.1μF/50V	72B3104C
C862	CHIP CERAMIC F Z 1μF/16V	72F6105C
C863	CHIP CERAMIC B K 0.0039μF/50V	12B3392C
C864	CHIP ELECTROLYTIC 47μF/6.3V M	121R476C
C865	CHIP TANTAL 2.2μF/10V M or	1224225C
	CHIP TANTAL 2.2μF/10V M	CA1A225KC003
C866	CHIP TANTAL 3.3μF/10V M or	1224335C
	CHIP TANTAL 3.3μF/10V M	CA1A335KC003
C867	CHIP ELECTROLYTIC 220μF/6.3V	CA0K221NC001
C868	CHIP ELECTROLYTIC 22μF/6.3V M	121R226C
C869	CHIP ELECTROLYTIC 10μF/16V M	122Z223
C870	CHIP ELECTROLYTIC 10μF/16V M	122Z223
C871	CHIP ELECTROLYTIC 10μF/16V M	122Z223
C872	CHIP TANTAL 1μF/16V M or	1225105C
	CHIP TANTAL 1μF/16V M	CA1C105KC003
C873	CHIP TANTAL 3.3μF/10V M or	1224335C
	CHIP TANTAL 3.3μF/10V M	CA1A335KC003
C874	CHIP CERAMIC F Z 1μF/16V	72F6105C
C875	CHIP CERAMIC SL J 820PF/50V	1270821C
C876	CHIP CERAMIC B K 0.022μF/50V	12B3223C
C877	CHIP TANTAL 1μF/16V M or	1225105C
	CHIP TANTAL 1μF/16V M	CA1C105KC003

Ref.No.	Description	PartNo.
C878	CHIP TANTAL 1μF/16V M or	1225105C
	CHIP TANTAL 1μF/16V M	CA1C105KC003
C879	CHIP ELECTROLYTIC 100μF/10V M	122Z786C
C880	CHIP ELECTROLYTIC 100μF/10V M	122Z786C
C881	CHIP TANTAL 4.7μF/6.3V M or	1223475C
	CHIP TANTAL 4.7μF/6.3V M	CA0K475KC003
	CONNECTORS	
CN-22	FPC CONNECTOR, 15P IL-402R-15S-S1L-SA	JC4RT15NBH0B
CN-23	FPC CONNECTOR, 8P IL-402R- 8S-S1L-SA	JC4RT08NBH0B
CN-24	CONNECTOR IL-Z-04PL-SMTY	JCILD04NBH0C
CN-26	CONNECTOR IL-Z-04PL-SMTY	JCILD04NBH0C
	DIODES	
D851	CHIP DIODE MA720	AMA720TX****
D852	CHIP DIODE MA720	AMA720TX****
	ICS	
IC851	IC CX20036-T1	GCX20036T1**
IC852	IC CX20115A-T1	GCX20115AT1*
IC853	IC CX20114-T1	GCX20114T1**
	COILS	
L851	COIL 220UH	LLBC***SF001
L852	CHIP INDUCTOR 100UH K	LLACKE2TE101
L853	COIL 220UH	LLBC***SF001
	TRANSISTORS	
Q851	CHIP 2SA1213(Y) or	QA1213TE12LY
	CHIP 2SB1188(Q) or	QSB1188T101Q
	CHIP 2SB1188(R)	QSB1188T101R
Q852	CHIP 2SA1576(R) or	QSA1576T106R
	CHIP 2SA1576(S)	QSA1576T106S
Q853	CHIP 2SA1213(Y) or	QA1213TE12LY
	CHIP 2SB1188(Q) or	QSB1188T101Q
	CHIP 2SB1188(R)	QSB1188T101R
Q854	CHIP 2SC4081(R) or	QSC4081T106R
	CHIP 2SC4081(S)	QSC4081T106S
Q855	CHIP 2SA1576(R) or	QSA1576T106R
	CHIP 2SA1576(S)	QSA1576T106S
QR851	CHIP DTC144WU	QTC144WUT106
QR852	CHIP DTA114YU	QTA114YUT106
QR853	CHIP DTC144EU	QTC144EUT106
	RESISTORS	
R851	CHIP 1/8W J 2.2Ω	134H229C
R852	CHIP 1/8W J 2.2Ω	134H229C
R853	CHIP 1/8W J 2.2Ω	134H229C
R854	CHIP 1/8W J 2.2Ω	134H229C
R855	CHIP 1/10W J 8.2KΩ	134F822C
R856	CHIP 1/10W J 10Ω	134F100C
R857	CHIP 1/10W J 10Ω	134F100C
R858	CHIP 1/10W J 10Ω	134F100C
R859	CHIP 1/10W J 1KΩ	134F102C
R860	CHIP 1/10W J 22KΩ	134F223C
R861	CHIP 1/10W J 10KΩ	134F103C
R862	CHIP 1/10W J 27KΩ	134F273C
R863	CHIP 1/10W J 2.7KΩ	134F272C
R864	CHIP 1/10W J 47KΩ	134F473C
R865	CHIP 1/10W J 10KΩ	134F103C
R866	CHIP 1/10W J 10KΩ	134F103C
R867	CHIP 1/10W J 15KΩ	134F153C
R868	CHIP 1/10W J 330Ω	134F331C
R869	CHIP 1/10W J 3.3KΩ	134F332C

Ref.No.	Description	PartNo.
R870	CHIP 1/10W J 2.7KΩ	134F272C
R871	CHIP 1/10W J 1KΩ	134F102C
R872	CHIP 1/10W J 3.9KΩ	134F392C
R873	CHIP 1/10W J 220KΩ	134F224C
R874	CHIP 1/10W J 390Ω	134F391C
R875	CHIP 1/8W J 47Ω	134H470C
R876	CHIP 1/8W J 47Ω	134H470C
R877	CHIP 1/10W J 10KΩ	134F103C
R878	CHIP 1/10W J 120Ω	134F121C
R879	CHIP 1/10W J 120Ω	134F121C
R880	CHIP 1/10W J 120Ω	134F121C
R881	CHIP 1/10W J 120Ω	134F121C
R882	CHIP 1/10W J 4.7KΩ	134F472C
R883	CHIP 1/10W J 150KΩ	134F154C
R884	CHIP 1/10W J 22KΩ	134F223C
R885	CHIP 1/10W J 100Ω	134F101C
R886	CHIP 1/10W J 12KΩ	134F123C
R888	CHIP 1/10W G 12KΩ	134G123C
R889	CHIP 1/10W G 15KΩ	134G153C
R890	CHIP 1/10W J 10KΩ	134F103C
R891	CHIP 1/10W J 1KΩ	134F102C
R892	CHIP 1/10W J 330Ω	134F331C
R893	CHIP 1/10W J 100Ω	134F101C
R894	CHIP 1/10W J 3.3KΩ	134F332C
S851	PHOTO TRNSISTOR RPM-20PB	QRPM20PB****
S852	PHOTO TRNSISTOR RPM-20PB	QRPM20PB****
	MISCELLANEOUS	
S853	SENSOR NJL5165SKA or	USESJRSJR003
	SENSOR RPR-134C	USESJRSRM002
S854	SENSOR NJL5165SKA or	USESJRSJR003
	SENSOR RPR-134C	USESJRSRM002
SW851	PUSH SWITCH SPPB53	1622209

CMV PCB ASSEMBLY 0VSA03980
Consists of the folowing:

Ref.No.	Description	PartNo.
	CMV PCB ASS'YEMBLY	not available
	CMV B PCB ASSEMBLY	not available
	P.C.B., CAMERA	BC1580G02005
CMV A PCB ASSEMBLY		
	CAPACITORS	
C02	CHIP CERAMIC F Z 0.022μF/25V or	CHD1EZ80Z223
	CHIP CERAMIC F Z 0.022μF/50V or	CHD1JZ80F223
	CHIP CERAMIC F Z 0.022μF/25V	CHD1EZ80F223
C03	CHIP CERAMIC 1μF/16V F 2125 or	CA1C010KC001
	CHIP CERAMIC 1μF/16V F 2125 or	CA1C010MR002
	CHIP CERAMIC 1μF/16V F 2125	CA1C010TU003
C04	ELECTROLYTIC 22μF/16V M H7	526T226V
C05	CHIP CERAMIC F Z 0.022μF/25V or	CHD1EZ80Z223
	CHIP CERAMIC F Z 0.022μF/50V or	CHD1JZ80F223
	CHIP CERAMIC F Z 0.022μF/25V	CHD1EZ80F223
C06	ELECTROLYTIC 100μF/10V M H7	526S107V
C07	CHIP CERAMIC F Z 0.022μF/25V or	CHD1EZ80Z223
	CHIP CERAMIC F Z 0.022μF/50V or	CHD1JZ80F223
	CHIP CERAMIC F Z 0.022μF/25V	CHD1EZ80F223
C08	CHIP CERAMIC F Z 0.022μF/25V or	CHD1EZ80Z223
	CHIP CERAMIC F Z 0.022μF/50V or	CHD1JZ80F223

Ref.No.	Description	PartNo.
	CHIP CERAMIC F Z 0.022μF/25V	CHD1EZ80F223
C09	ELECTROLYTIC 22μF/16V M H7	526T226V
C10	ELECTROLYTIC 4.7μF/25V H=5 NP or	CA1E4R7NC002
	ELECTROLYTIC 4.7μF/25V H=5 NP	CA1E4R7MS001
C11	CHIP CERAMIC SL J 47PF/50V	CHD1JJ8SL470
C12	CHIP CERAMIC F Z 0.022μF/25V or	CHD1EZ80Z223
	CHIP CERAMIC F Z 0.022μF/50V or	CHD1JZ80F223
	CHIP CERAMIC F Z 0.022μF/25V	CHD1EZ80F223
C14	CHIP CERAMIC F Z 0.022μF/25V or	CHD1EZ80Z223
	CHIP CERAMIC F Z 0.022μF/50V or	CHD1JZ80F223
	CHIP CERAMIC F Z 0.022μF/25V	CHD1EZ80F223
C15	CHIP CERAMIC CG C 5PF/50V or	CHD1JC8CG5R0
	CHIP CERAMIC CH C 5PF/50V	CHD1JC8CH5R0
C17	ELECTROLYTIC 47μF/6.3V M H7	526R476V
C18	CHIP CERAMIC F Z 0.1μF/25V or	CHD1EZ80Z104
	CHIP CERAMIC F Z 0.1μF/16V or	CHD1CZ80F104
	CHIP CERAMIC F Z 0.1μF/25V or	CHD1EZ80F104
	CHIP CERAMIC F Z 0.1μF/16V	CHD1CZ80Z104
C19	CHIP CERAMIC F Z 0.022μF/25V or	CHD1EZ80Z223
	CHIP CERAMIC F Z 0.022μF/50V or	CHD1JZ80F223
	CHIP CERAMIC F Z 0.022μF/25V	CHD1EZ80F223
C20	CHIP CERAMIC F Z 0.022μF/25V or	CHD1EZ80Z223
	CHIP CERAMIC F Z 0.022μF/50V or	CHD1JZ80F223
	CHIP CERAMIC F Z 0.022μF/25V	CHD1EZ80F223
C21	CHIP CERAMIC CG J 39PF/50V or	CHD1JJ8CG390
	CHIP CERAMIC CH J 39PF/50V	CHD1JJ8CH390
C22	CHIP CERAMIC CG J 33PF/50V or	CHD1JJ8CG330
	CHIP CERAMIC CH J 33PF/50V	CHD1JJ8CH330
C27	CHIP CERAMIC F Z 0.022μF/25V or	CHD1EZ80Z223
	CHIP CERAMIC F Z 0.022μF/50V or	CHD1JZ80F223
	CHIP CERAMIC F Z 0.022μF/25V	CHD1EZ80F223
C28	CHIP CERAMIC F Z 0.022μF/25V or	CHD1EZ80Z223
	CHIP CERAMIC F Z 0.022μF/50V or	CHD1JZ80F223
	CHIP CERAMIC F Z 0.022μF/25V	CHD1EZ80F223
C29	CHIP CERAMIC 1μF/16V F 2125 or	CA1C010KC001
	CHIP CERAMIC 1μF/16V F 2125 or	CA1C010MR002
	CHIP CERAMIC 1μF/16V F 2125	CA1C010TU003
C30	CHIP CERAMIC B K 1000PF/50V or	CHD1JK80X102
	CHIP CERAMIC B K 1000PF/25V or	CHD1EK80X102
	CHIP CERAMIC B K 1000PF/50V or	CHD1JK80B102
	CHIP CERAMIC B K 1000PF/25V	CHD1EK80B102
C31	CHIP CERAMIC F Z 0.047μF/50V or	CHD1JZ80F473
	CHIP CERAMIC F Z 0.047μF/25V	CHD1EZ80F473
C32	CHIP CERAMIC F Z 0.047μF/50V or	CHD1JZ80F473
	CHIP CERAMIC F Z 0.047μF/25V	CHD1EZ80F473
C33	CHIP CERAMIC F Z 0.047μF/50V or	CHD1JZ80F473
	CHIP CERAMIC F Z 0.047μF/25V	CHD1EZ80F473
C34	CHIP CERAMIC F Z 0.047μF/50V or	CHD1JZ80F473
	CHIP CERAMIC F Z 0.047μF/25V	CHD1EZ80F473
C35	CHIP CERAMIC F Z 0.047μF/50V or	CHD1JZ80F473
	CHIP CERAMIC F Z 0.047μF/25V	CHD1EZ80F473
C36	CHIP CERAMIC B K 6800PF/25V or	CHD1EK80X682
	CHIP CERAMIC B K 6800PF/50V or	CHD1JK80X682
	CHIP CERAMIC B K 6800PF/50V or	CHD1JK80B682
	CHIP CERAMIC B K 6800PF/25V	CHD1EK80B682
C46	ELECTROLYTIC 10μF/25V M H7	526U106V
C48	ELECTROLYTIC 100μF/6.3V M H7	526R107V
C49	CHIP CERAMIC F Z 0.1μF/25V or	CHD1EZ80Z104
	CHIP CERAMIC F Z 0.1μF/16V or	CHD1CZ80F104
	CHIP CERAMIC F Z 0.1μF/25V or	CHD1EZ80F104

Ref.No.	Description	PartNo.
	CHIP CERAMIC F Z 0.1μF/16V	CHD1CZ80Z104
C50	CHIP CERAMIC F Z 0.1μF/25V or	CHD1EZ80Z104
	CHIP CERAMIC F Z 0.1μF/16V or	CHD1CZ80F104
	CHIP CERAMIC F Z 0.1μF/25V or	CHD1EZ80F104
	CHIP CERAMIC F Z 0.1μF/16V	CHD1CZ80Z104
C51	CHIP CERAMIC CG J 18PF/50V or	CHD1JJ8CG180
	CHIP CERAMIC CH J 18PF/50V	CHD1JJ8CH180
C52	ELECTROLYTIC 47μF/6.3V M H7	526R476V
C53	CHIP TANTAL 1μF/16V M or	1225105C
	CHIP TANTAL 1μF/16V M	CA1C105KC003
C54	ELECTROLYTIC 100μF/10V M H7	526S107V
C55	CHIP CERAMIC CG C 7PF/50V or	CHD1JC8CG7R0
	CHIP CERAMIC CH D 7PF/50V	CHD1JD8CH7R0
C56	CHIP CERAMIC F Z 0.1μF/25V or	CHD1EZ80Z104
	CHIP CERAMIC F Z 0.1μF/16V or	CHD1CZ80F104
	CHIP CERAMIC F Z 0.1μF/25V or	CHD1EZ80F104
	CHIP CERAMIC F Z 0.1μF/16V	CHD1CZ80Z104
C57	CHIP CERAMIC CG J 18PF/50V or	CHD1JJ8CG180
	CHIP CERAMIC CH J 18PF/50V	CHD1JJ8CH180
C58	CHIP CERAMIC F Z 0.1μF/25V or	CHD1EZ80Z104
	CHIP CERAMIC F Z 0.1μF/16V or	CHD1CZ80F104
	CHIP CERAMIC F Z 0.1μF/25V or	CHD1EZ80F104
	CHIP CERAMIC F Z 0.1μF/16V	CHD1CZ80Z104
C59	CHIP CERAMIC CG J 18PF/50V or	CHD1JJ8CG180
	CHIP CERAMIC CH J 18PF/50V	CHD1JJ8CH180
C63	ELECTROLYTIC 3.3μF/50V M H7	526W335V
C64	ELECTROLYTIC 10μF/25V M H7	526U106V
C65	ELECTROLYTIC 100μF/6.3V M H7	526R107V
C66	CHIP 1/16W J 0Ω	RCXGJR8Z0000
C67	ELECTROLYTIC 33μF/25V M H7	526U336V
C70	CHIP CERAMIC F Z 0.1μF/25V or	CHD1EZ80Z104
	CHIP CERAMIC F Z 0.1μF/16V or	CHD1CZ80F104
	CHIP CERAMIC F Z 0.1μF/25V or	CHD1EZ80F104
	CHIP CERAMIC F Z 0.1μF/16V	CHD1CZ80Z104
C71	ELECTROLYTIC 10μF/25V M H7	526U106V
C72	CHIP CERAMIC F Z 0.022μF/25V or	CHD1EZ80Z223
	CHIP CERAMIC F Z 0.022μF/50V or	CHD1JZ80F223
	CHIP CERAMIC F Z 0.022μF/25V	CHD1EZ80F223
C73	CHIP CERAMIC F Z 0.022μF/25V or	CHD1EZ80Z223
	CHIP CERAMIC F Z 0.022μF/50V or	CHD1JZ80F223
	CHIP CERAMIC F Z 0.022μF/25V	CHD1EZ80F223
C75	CHIP CERAMIC F Z 0.1μF/25V or	CHD1EZ80Z104
	CHIP CERAMIC F Z 0.1μF/16V or	CHD1CZ80F104
	CHIP CERAMIC F Z 0.1μF/25V or	CHD1EZ80F104
	CHIP CERAMIC F Z 0.1μF/16V	CHD1CZ80Z104
C76	CHIP CERAMIC 1μF/16V F 2125 or	CA1C010KC001
	CHIP CERAMIC 1μF/16V F 2125 or	CA1C010MR002
	CHIP CERAMIC 1μF/16V F 2125	CA1C010TU003
C77	CHIP CERAMIC B K 3300PF/50V or	CHD1JK80X332
	CHIP CERAMIC B K 3300PF/25V or	CHD1EK80X332
	CHIP CERAMIC B K 3300PF/50V or	CHD1JK80B332
	CHIP CERAMIC B K 3300PF/25V	CHD1EK80B332
C78	CHIP CERAMIC F Z 0.1μF/25V or	CHD1EZ80Z104
	CHIP CERAMIC F Z 0.1μF/16V or	CHD1CZ80F104
	CHIP CERAMIC F Z 0.1μF/25V or	CHD1EZ80F104
	CHIP CERAMIC F Z 0.1μF/16V	CHD1CZ80Z104
C79	OS 6.8μF/16V OS	CA1C6R8SY001
C80	CHIP CERAMIC SL J 220PF/50V	CHD1JJ8SL221
C81	CHIP CERAMIC B K 1000PF/50V or	CHD1JK80X102
	CHIP CERAMIC B K 1000PF/25V or	CHD1EK80X102

Ref.No.	Description	PartNo.
	CHIP CERAMIC B K 1000PF/50V or	CHD1JK80B102
	CHIP CERAMIC B K 1000PF/25V	CHD1EK80B102
C82	CHIP CERAMIC SL J 82PF/50V	CHD1JJ8SL820
C85	OS 6.8μF/16V OS	CA1C6R8SY001
C86	OS 6.8μF/16V OS	CA1C6R8SY001
C87	ELECTROLYTIC 47μF/16V M H7	526T476V
C88	CHIP CERAMIC B K 1500PF/50V	CHD1JK80X152
C89	CHIP CERAMIC SL J 150PF/50V	CHD1JJ8SL151
C90	CHIP CERAMIC B K 3300PF/50V or	CHD1JK80X332
	CHIP CERAMIC B K 3300PF/25V or	CHD1EK80X332
	CHIP CERAMIC B K 3300PF/50V or	CHD1JK80B332
	CHIP CERAMIC B K 3300PF/25V	CHD1EK80B332
C91	CHIP CERAMIC F Z 0.22μF/25V	12F2224C
C92	CHIP CERAMIC F Z 0.01μF/25V or	CHD1EZ80Z103
	CHIP CERAMIC F Z 0.01μF/50V or	CHD1JZ80Z103
	CHIP CERAMIC F Z 0.01μF/50V or	CHD1JZ80F103
	CHIP CERAMIC F Z 0.01μF/25V	CHD1EZ80F103
C93	CHIP CERAMIC SL J 220PF/50V	CHD1JJ8SL221
C94	CHIP CERAMIC B K 1000PF/50V or	CHD1JK80X102
	CHIP CERAMIC B K 1000PF/25V or	CHD1EK80X102
	CHIP CERAMIC B K 1000PF/50V or	CHD1JK80B102
	CHIP CERAMIC B K 1000PF/25V	CHD1EK80B102
C95	ELECTROLYTIC 33μF/25V M H7	526U336V
C96	ELECTROLYTIC 33μF/25V M H7	526U336V
C97	OS 6.8μF/16V OS	CA1C6R8SY001
C98	ELECTROLYTIC 47μF/16V M H7	526T476V
C99	ELECTROLYTIC 33μF/25V M H7	526U336V
C100	ELECTROLYTIC 33μF/25V M H7	526U336V
	CONNECTORS	
CL-29	CONNECTOR, 14P 52022-1410	1700636
CL-30	CONNECTOR, 14P 52022-1410	1700636
CN-32	FPC CONNECTOR, 10P IL-402-10S-S1L-SA	JC42T10NBH0B
	DIODES	
D01	CHIP DIODE MA141K	AMA141KTX***
D02	CHIP DIODE MA141K	AMA141KTX***
D04	CHIP DIODE MA141K	AMA141KTX***
D05	CHIP DIODE MA141K	AMA141KTX***
D08	CHIP DIODE MA141K	AMA141KTX***
D09	CHIP DIODE MA141K	AMA141KTX***
D51	CHIP DIODE MA141K	AMA141KTX***
D52	CHIP DIODE MA141K	AMA141KTX***
D53	SCHOTTKY DIODE SB007-03CP	ASB00703CPTB
D54	CHIP DIODE MA141K	AMA141KTX***
	RESISTORS	
EF02	CHIP 1/10W J 0Ω	134F000C
EF03	CHIP 1/10W J 0Ω	134F000C
EF04	CHIP 1/10W J 0Ω	134F000C
	ICS	
IC01	IC MM1036XFF(T1)	GMM1036XFFT1
IC02	IC UPC358G2(T1) or	GUPC358G2T1*
	IC BA10358F-T1 or	GBA10358FT1*
	IC NJM2904M(T1)	GNJM2904MT1*
IC03	IC LZ95D34	GLZ95D340000
IC05	IC AN2012S-(T1)	GAN2012ST100
IC06	IC MN3110SA-E2	GMN3110SAE20
IC51	IC UPC1100G-T1	14LV359
	COILS	
L02	LEAD INDUCTOR 15UH K or	LLAXKBVFS150
	INDUCTOR 15UH J	1170972T

Ref.No.	Description	PartNo.
L03	LEAD INDUCTOR 15UH K or	LLAXKBVFS150
	INDUCTOR 15UH J	1170972T
L04	LEAD INDUCTOR 15UH K or	LLAXKBVFS150
	INDUCTOR 15UH J	1170972T
L05	LEAD INDUCTOR 15UH K or	LLAXKBVFS150
	INDUCTOR 15UH J	1170972T
L06	LEAD INDUCTOR 220UH K or	LLAXKBVFS221
	INDUCTOR 220UH J	1170986T
L07	LEAD INDUCTOR 15UH K or	LLAXKBVFS150
	INDUCTOR 15UH J	1170972T
L08	LEAD INDUCTOR 15UH K or	LLAXKBVFS150
	INDUCTOR 15UH J	1170972T
L11	CHIP INDUCTOR 15UH K or	1170718
	CHIP INDUCTOR 15UH K or	1170624
	CHIP INDUCTOR 15UH K or	117N599
	CHIP INDUCTOR 15UH K 3225 or	LLACKE8FS150
	CHIP INDUCTOR 15UH J	1170732
L12	CHIP INDUCTOR 15UH K or	1170718
	CHIP INDUCTOR 15UH K or	1170624
	CHIP INDUCTOR 15UH K or	117N599
	CHIP INDUCTOR 15UH K 3225 or	LLACKE8FS150
	CHIP INDUCTOR 15UH J	1170732
L13	LEAD INDUCTOR 100UH K or	LLAXKBVFS101
	INDUCTOR 100UH J	1170982T
L14	LEAD INDUCTOR 15UH K or	LLAXKBVFS150
	INDUCTOR 15UH J	1170972T
L15	LEAD INDUCTOR 33UH J or	LLAXJBVFS330
	INDUCTOR 33UH J	1170976T
L51	INDUCTOR 47UH or	117D583
	INDUCTOR 47UH	117B681
L52	MOLD POWER INDUCTOR 33UH M	LLBD00PSF008
L53	INDUCTOR 47UH or	117D583
	INDUCTOR 47UH	117B681
L54	LEAD INDUCTOR 270UH K or	LLAXKBVFS271
	INDUCTOR 270UH J	1170987T
L55	INDUCTOR 47UH or	117D583
	INDUCTOR 47UH	117B681
L56	LEAD INDUCTOR 270UH K or	LLAXKBVFS271
	INDUCTOR 270UH J	1170987T
	TRANSISTORS	
Q01	CHIP FET 2SK621	Q2SK621TX***
Q02	CHIP 2SC4081(R) or	QSC4081T106R
	CHIP 2SC4081(S)	QSC4081T106S
Q03	CHIP 2SC4081(R) or	QSC4081T106R
	CHIP 2SC4081(S)	QSC4081T106S
Q15	CHIP 2SC4081(R) or	QSC4081T106R
	CHIP 2SC4081(S)	QSC4081T106S
Q51	CHIP 2SC4081(R) or	QSC4081T106R
	CHIP 2SC4081(S)	QSC4081T106S
Q52	CHIP 2SB1073Q-TX or	Q2SB1073QTX0
	CHIP 2SB1073P-TX or	Q2SB1073PTX0
	CHIP 2SB1386T101P or	QSB1386T101P
	CHIP 2SB1386T101Q	QSB1386T101Q
Q53	CHIP 2SC4081(R) or	QSC4081T106R
	CHIP 2SC4081(S)	QSC4081T106S
QD51	CHIP SAH02-V1	QSAH02V10000
	RESOSTORS	
R01	CHIP 1/16W J 2.7KΩ	RCXGJR8Z0272
R02	CHIP 1/16W J 2.7KΩ	RCXGJR8Z0272
R03	CHIP 1/16W J 39KΩ	RCXGJR8Z0393

Ref.No.	Description	PartNo.
R04	CHIP 1/16W J 39KΩ	RCXGJR8Z0393
R05	CHIP 1/16W J 4.7KΩ	RCXGJR8Z0472
R10	CHIP 1/16W J 1MΩ	RCXGJR8Z0105
R11	CHIP 1/16W J 390Ω	RCXGJR8Z0391
R12	CHIP 1/16W J 2.2KΩ	RCXGJR8Z0222
R13	CHIP 1/16W J 10KΩ	RCXGJR8Z0103
R14	CHIP 1/16W J 5.6KΩ	RCXGJR8Z0562
R16	CHIP 1/16W J 100Ω	RCXGJR8Z0101
R17	CHIP 1/16W J 10KΩ	RCXGJR8Z0103
R24	CHIP 1/16W J 0Ω	RCXGJR8Z0000
R25	CHIP 1/16W J 0Ω	RCXGJR8Z0000
R26	CHIP 1/16W J 0Ω	RCXGJR8Z0000
R28	CHIP 1/16W J 330Ω	RCXGJR8Z0331
R29	CHIP 1/16W J 100Ω	RCXGJR8Z0101
R30	CHIP 1/16W J 1MΩ	RCXGJR8Z0105
R32	CHIP 1/16W J 560Ω	RCXGJR8Z0561
R33	CHIP 1/16W J 560Ω	RCXGJR8Z0561
R39	CHIP 1/16W J 1MΩ	RCXGJR8Z0105
R40	CHIP 1/16W J 2.7KΩ	RCXGJR8Z0272
R41	CHIP 1/16W J 2.2KΩ	RCXGJR8Z0222
R42	CHIP 1/16W J 6.8KΩ	RCXGJR8Z0682
R43	CHIP 1/16W J 56KΩ	RCXGJR8Z0563
R44	CHIP 1/16W J 10KΩ	RCXGJR8Z0103
R45	CHIP 1/16W J 100Ω	RCXGJR8Z0101
R46	CHIP 1/16W J 4.7Ω	RCXGJR8Z04R7
R47	CHIP 1/16W J 4.7Ω	RCXGJR8Z04R7
R48	CHIP 1/16W J 100Ω	RCXGJR8Z0101
R49	CHIP 1/16W J 100Ω	RCXGJR8Z0101
R50	CHIP 1/16W J 0Ω	RCXGJR8Z0000
R52	CHIP 1/16W J 4.7Ω	RCXGJR8Z04R7
R53	CHIP 1/16W J 0Ω	RCXGJR8Z0000
R54	CHIP 1/16W J 0Ω	RCXGJR8Z0000
R57	CHIP 1/16W J 4.7Ω	RCXGJR8Z04R7
R58	CHIP 1/16W J 8.2KΩ	RCXGJR8Z0822
R59	CHIP 1/16W J 4.7KΩ	RCXGJR8Z0472
R63	CHIP 1/16W J 100Ω	RCXGJR8Z0101
R64	CHIP 1/16W J 470Ω	RCXGJR8Z0471
R65	CHIP 1/16W J 2KΩ	RCXGJR8Z0202
R66	CHIP 1/16W J 43KΩ	RCXGJR8Z0433
R70	CHIP 1/16W J 33KΩ	RCXGJR8Z0333
R71	CHIP 1/16W J 33KΩ	RCXGJR8Z0333
R72	CHIP 1/16W J 330KΩ	RCXGJR8Z0334
R73	CHIP 1/16W J 33KΩ	RCXGJR8Z0333
R76	CHIP 1/16W G 22KΩ	RCXGGR8Z0223
R77	CHIP 1/16W G 6.2KΩ	RCXGGR8Z0622
R78	CHIP 1/16W J 4.7KΩ	RCXGJR8Z0472
R80	CHIP 1/16W J 1.2KΩ	RCXGJR8Z0122
R82	CHIP 1/16W J 10KΩ	RCXGJR8Z0103
R83	CHIP 1/8W J 680Ω	134H681C
R84	CHIP 1/8W J 680Ω	134H681C
R85	CHIP 1/16W J 0Ω	RCXGJR8Z0000
R86	CHIP 1/16W J 7.5KΩ	RCXGJR8Z0752
R88	CHIP 1/16W J 4.7KΩ	RCXGJR8Z0472
R89	CHIP 1/16W J 39KΩ	RCXGJR8Z0393
R90	CHIP 1/16W J 82KΩ	RCXGJR8Z0823
R91	CHIP 1/16W G 20KΩ	RCXGGR8Z0203
R92	CHIP 1/16W G 3KΩ	RCXGGR8Z0302
R93	CHIP 1/16W J 10KΩ	RCXGJR8Z0103
R94	CHIP 1/16W J 33KΩ	RCXGJR8Z0333
R95	CHIP 1/10W J 39Ω	134F390C

Ref.No.	Description	PartNo.
R96	CHIP 1/16W J 10KΩ	RCXGJR8Z0103
R97	CHIP 1/8W J 470Ω	134H471C
R98	CHIP 1/16W J 1.8KΩ	RCXGJR8Z0182
R99	CHIP 1/16W J 0Ω	RCXGJR8Z0000
R100	CHIP 1/16W J 0Ω	RCXGJR8Z0000
	MISCELLANEOUS	
T51	DC-DC CONV TRANS 0313-084	LTA00ZPSF002
TC01	CHIP TRIMMER 30PF or	CVC3000T1004
	CHIP TRIMMER 30PF	1280175C
TP01	CHECKER CHIP RCU00000C	XU0C000AL001
TP02	CHECKER CHIP RCU00000C	XU0C000AL001
TP03	CHECKER CHIP RCU00000C	XU0C000AL001
TP04	CHECKER CHIP RCU00000C	XU0C000AL001
TP05	CHECKER CHIP RCU00000C	XU0C000AL001
TP51	CHECKER CHIP RCU00000C	XU0C000AL001
TP52	CHECKER CHIP RCU00000C	XU0C000AL001
TP53	CHECKER CHIP RCU00000C	XU0C000AL001
VR01	CHIP P.O.T. 2KΩ B X	238N265C
VR02	CHIP P.O.T. 2KΩ B X	238N265C
VR03	CHIP P.O.T. 10KΩ B X	238N267C
VR04	CHIP P.O.T. 50KΩ B X	238N269C
VR51	CHIP P.O.T. 2KΩ B X	238N265C
VR53	CHIP P.O.T. 500Ω B X	238N263C
X01	X'TAL 19MHZ	FXC196LCT001
CMV-B PCB ASSEMBLY		
	CAPACITORS	
C101	CHIP CERAMIC F Z 0.022μF/25V or	CHD1EZ80Z223
	CHIP CERAMIC F Z 0.022μF/50V or	CHD1JZ80Z223
	CHIP CERAMIC F Z 0.022μF/50V or	CHD1JZ80F223
	CHIP CERAMIC F Z 0.022μF/25V	CHD1EZ80F223
C103	CHIP CERAMIC 1μF/16V F 2125 or	CA1C010KC001
	CHIP CERAMIC 1μF/16V F 2125 or	CA1C010MR002
	CHIP CERAMIC 1μF/16V F 2125	CA1C010TU003
C107	CHIP CERAMIC F Z 0.047μF/16V or	CHD1CZ80Z473
	CHIP CERAMIC F Z 0.047μF/25V or	CHD1EZ80Z473
	CHIP CERAMIC F Z 0.047μF/25V or	CHD1EZ80F473
	CHIP CERAMIC F Z 0.047μF/16V or	CHD1CZ80F473
	CHIP CERAMIC F Z 0.047μF/50V	CHD1JZ80F473
C108	CHIP CERAMIC F Z 0.047μF/16V or	CHD1CZ80Z473
	CHIP CERAMIC F Z 0.047μF/25V or	CHD1EZ80Z473
	CHIP CERAMIC F Z 0.047μF/25V or	CHD1EZ80F473
	CHIP CERAMIC F Z 0.047μF/16V or	CHD1CZ80F473
	CHIP CERAMIC F Z 0.047μF/50V	CHD1JZ80F473
C109	CHIP CERAMIC F Z 0.022μF/25V or	CHD1EZ80Z223
	CHIP CERAMIC F Z 0.022μF/50V or	CHD1JZ80Z223
	CHIP CERAMIC F Z 0.022μF/50V or	CHD1JZ80F223
	CHIP CERAMIC F Z 0.022μF/25V	CHD1EZ80F223
C110	CHIP CERAMIC 1μF/16V F 2125 or	CA1C010KC001
	CHIP CERAMIC 1μF/16V F 2125 or	CA1C010MR002
	CHIP CERAMIC 1μF/16V F 2125	CA1C010TU003
C111	CHIP CERAMIC F Z 0.1μF/25V or	CHD1EZ80Z104
	CHIP CERAMIC F Z 0.1μF/16V or	CHD1CZ80F104
	CHIP CERAMIC F Z 0.1μF/25V or	CHD1EZ80F104
	CHIP CERAMIC F Z 0.1μF/16V	CHD1CZ80Z104
C112	OS 15μF/6.3V OS	CA0K150SY001
C115	CHIP CERAMIC F Z 0.047μF/16V or	CHD1CZ80Z473
	CHIP CERAMIC F Z 0.047μF/25V or	CHD1EZ80Z473
	CHIP CERAMIC F Z 0.047μF/25V or	CHD1EZ80F473
	CHIP CERAMIC F Z 0.047μF/16V or	CHD1CZ80F473

Ref.No.	Description	PartNo.
	CHIP CERAMIC F Z 0.047μF/50V	CHD1JZ80F473
C116	CHIP CERAMIC 1μF/16V F 2125 or	CA1C010KC001
	CHIP CERAMIC 1μF/16V F 2125 or	CA1C010MR002
	CHIP CERAMIC 1μF/16V F 2125	CA1C010TU003
C117	CHIP CERAMIC F Z 0.047μF/16V or	CHD1CZ80Z473
	CHIP CERAMIC F Z 0.047μF/25V or	CHD1EZ80Z473
	CHIP CERAMIC F Z 0.047μF/25V or	CHD1EZ80F473
	CHIP CERAMIC F Z 0.047μF/16V or	CHD1CZ80F473
	CHIP CERAMIC F Z 0.047μF/50V	CHD1JZ80F473
C118	CHIP CERAMIC 1μF/16V F 2125 or	CA1C010KC001
	CHIP CERAMIC 1μF/16V F 2125 or	CA1C010MR002
	CHIP CERAMIC 1μF/16V F 2125	CA1C010TU003
C121	CHIP CERAMIC F Z 0.047μF/16V or	CHD1CZ80Z473
	CHIP CERAMIC F Z 0.047μF/25V or	CHD1EZ80Z473
	CHIP CERAMIC F Z 0.047μF/25V or	CHD1EZ80F473
	CHIP CERAMIC F Z 0.047μF/16V or	CHD1CZ80F473
	CHIP CERAMIC F Z 0.047μF/50V	CHD1JZ80F473
C122	CHIP CERAMIC 1μF/16V F 2125 or	CA1C010KC001
	CHIP CERAMIC 1μF/16V F 2125 or	CA1C010MR002
	CHIP CERAMIC 1μF/16V F 2125	CA1C010TU003
C123	CHIP CERAMIC 1μF/16V F 2125 or	CA1C010KC001
	CHIP CERAMIC 1μF/16V F 2125 or	CA1C010MR002
	CHIP CERAMIC 1μF/16V F 2125	CA1C010TU003
C124	CHIP CERAMIC 1μF/16V F 2125 or	CA1C010KC001
	CHIP CERAMIC 1μF/16V F 2125 or	CA1C010MR002
	CHIP CERAMIC 1μF/16V F 2125	CA1C010TU003
C126	ELECTROLYTIC 10μF/16V M	121T106V
C127	ELECTROLYTIC 10μF/16V H=5 NP or	CA1C100MS001
	ELECTROLYTIC 10μF/16V H=5 NP	CA1C100NC002
C128	CHIP CERAMIC 1μF/16V F 2125 or	CA1C010KC001
	CHIP CERAMIC 1μF/16V F 2125 or	CA1C010MR002
	CHIP CERAMIC 1μF/16V F 2125	CA1C010TU003
C130	CHIP CERAMIC F Z 0.022μF/25V or	CHD1EZ80Z223
	CHIP CERAMIC F Z 0.022μF/50V or	CHD1JZ80Z223
	CHIP CERAMIC F Z 0.022μF/50V or	CHD1JZ80F223
	CHIP CERAMIC F Z 0.022μF/25V	CHD1EZ80F223
C131	CHIP CERAMIC F Z 0.022μF/25V or	CHD1EZ80Z223
	CHIP CERAMIC F Z 0.022μF/50V or	CHD1JZ80Z223
	CHIP CERAMIC F Z 0.022μF/50V or	CHD1JZ80F223
	CHIP CERAMIC F Z 0.022μF/25V	CHD1EZ80F223
C132	CHIP CERAMIC F Z 0.1μF/25V or	CHD1EZ80Z104
	CHIP CERAMIC F Z 0.1μF/16V or	CHD1CZ80F104
	CHIP CERAMIC F Z 0.1μF/25V or	CHD1EZ80F104
	CHIP CERAMIC F Z 0.1μF/16V	CHD1CZ80Z104
C133	CHIP CERAMIC F Z 0.022μF/25V or	CHD1EZ80Z223
	CHIP CERAMIC F Z 0.022μF/50V or	CHD1JZ80Z223
	CHIP CERAMIC F Z 0.022μF/50V or	CHD1JZ80F223
	CHIP CERAMIC F Z 0.022μF/25V	CHD1EZ80F223
C134	CHIP CERAMIC F Z 0.047μF/16V or	CHD1CZ80Z473
	CHIP CERAMIC F Z 0.047μF/25V or	CHD1EZ80Z473
	CHIP CERAMIC F Z 0.047μF/25V or	CHD1EZ80F473
	CHIP CERAMIC F Z 0.047μF/16V or	CHD1CZ80F473
	CHIP CERAMIC F Z 0.047μF/50V	CHD1JZ80F473
C136	CHIP CERAMIC F Z 0.01μF/50V or	CHD1JZ80Z103
	CHIP CERAMIC F Z 0.01μF/25V or	CHD1EZ80Z103
	CHIP CERAMIC F Z 0.01μF/50V or	CHD1JZ80F103
	CHIP CERAMIC F Z 0.01μF/25V	CHD1EZ80F103
C138	ELECTROLYTIC 100μF/6.3V M	121R107V
C139	CHIP CERAMIC F Z 0.047μF/16V or	CHD1CZ80Z473
	CHIP CERAMIC F Z 0.047μF/25V or	CHD1EZ80Z473

Ref.No.	Description	PartNo.
	CHIP CERAMIC F Z 0.047μF/25V or	CHD1EZ80F473
	CHIP CERAMIC F Z 0.047μF/16V or	CHD1CZ80F473
	CHIP CERAMIC F Z 0.047μF/50V	CHD1JZ80F473
C140	ELECTROLYTIC 10μF/16V M	121T106V
C141	CHIP CERAMIC F Z 0.022μF/25V or	CHD1EZ80Z223
	CHIP CERAMIC F Z 0.022μF/50V or	CHD1JZ80Z223
	CHIP CERAMIC F Z 0.022μF/50V or	CHD1JZ80F223
	CHIP CERAMIC F Z 0.022μF/25V	CHD1EZ80F223
C142	CHIP CERAMIC F Z 0.022μF/25V or	CHD1EZ80Z223
	CHIP CERAMIC F Z 0.022μF/50V or	CHD1JZ80Z223
	CHIP CERAMIC F Z 0.022μF/50V or	CHD1JZ80F223
	CHIP CERAMIC F Z 0.022μF/25V	CHD1EZ80F223
C143	CHIP CERAMIC F Z 0.022μF/25V or	CHD1EZ80Z223
	CHIP CERAMIC F Z 0.022μF/50V or	CHD1JZ80Z223
	CHIP CERAMIC F Z 0.022μF/50V or	CHD1JZ80F223
	CHIP CERAMIC F Z 0.022μF/25V	CHD1EZ80F223
C144	CHIP TANTAL 4.7μF/6.3V M or	1223475C
	CHIP TANTAL 4.7μF/6.3V M	CA0K475KC003
C145	CHIP CERAMIC F Z 0.047μF/16V or	CHD1CZ80Z473
	CHIP CERAMIC F Z 0.047μF/25V or	CHD1EZ80Z473
	CHIP CERAMIC F Z 0.047μF/25V or	CHD1EZ80F473
	CHIP CERAMIC F Z 0.047μF/16V or	CHD1CZ80F473
	CHIP CERAMIC F Z 0.047μF/50V	CHD1JZ80F473
C146	ELECTROLYTIC 10μF/16V M	121T106V
C147	CHIP CERAMIC F Z 0.047μF/16V or	CHD1CZ80Z473
	CHIP CERAMIC F Z 0.047μF/25V or	CHD1EZ80Z473
	CHIP CERAMIC F Z 0.047μF/25V or	CHD1EZ80F473
	CHIP CERAMIC F Z 0.047μF/16V or	CHD1CZ80F473
	CHIP CERAMIC F Z 0.047μF/50V	CHD1JZ80F473
C148	CHIP CERAMIC F Z 0.047μF/16V or	CHD1CZ80Z473
	CHIP CERAMIC F Z 0.047μF/25V or	CHD1EZ80Z473
	CHIP CERAMIC F Z 0.047μF/25V or	CHD1EZ80F473
	CHIP CERAMIC F Z 0.047μF/16V or	CHD1CZ80F473
	CHIP CERAMIC F Z 0.047μF/50V	CHD1JZ80F473
C149	CHIP CERAMIC F Z 0.022μF/25V or	CHD1EZ80Z223
	CHIP CERAMIC F Z 0.022μF/50V or	CHD1JZ80Z223
	CHIP CERAMIC F Z 0.022μF/50V or	CHD1JZ80F223
	CHIP CERAMIC F Z 0.022μF/25V	CHD1EZ80F223
C150	ELECTROLYTIC 10μF/16V M	121T106V
C151	CHIP CERAMIC F Z 0.047μF/16V or	CHD1CZ80Z473
	CHIP CERAMIC F Z 0.047μF/25V or	CHD1EZ80Z473
	CHIP CERAMIC F Z 0.047μF/25V or	CHD1EZ80F473
	CHIP CERAMIC F Z 0.047μF/16V or	CHD1CZ80F473
	CHIP CERAMIC F Z 0.047μF/50V	CHD1JZ80F473
C152	CHIP CERAMIC 1μF/16V F 2125 or	CA1C010KC001
	CHIP CERAMIC 1μF/16V F 2125 or	CA1C010MR002
	CHIP CERAMIC 1μF/16V F 2125	CA1C010TU003
C153	CHIP TANTAL 4.7μF/6.3V M or	1223475C
	CHIP TANTAL 4.7μF/6.3V M	CA0K475KC003
C154	CHIP CERAMIC 1μF/16V F 2125 or	CA1C010KC001
	CHIP CERAMIC 1μF/16V F 2125 or	CA1C010MR002
	CHIP CERAMIC 1μF/16V F 2125	CA1C010TU003
C155	CHIP CERAMIC 1μF/16V F 2125 or	CA1C010KC001
	CHIP CERAMIC 1μF/16V F 2125 or	CA1C010MR002
	CHIP CERAMIC 1μF/16V F 2125	CA1C010TU003
C156	CHIP CERAMIC F Z 0.1μF/25V or	CHD1EZ80Z104
	CHIP CERAMIC F Z 0.1μF/16V or	CHD1CZ80F104
	CHIP CERAMIC F Z 0.1μF/25V or	CHD1EZ80F104
	CHIP CERAMIC F Z 0.1μF/16V	CHD1CZ80Z104
C158	CHIP CERAMIC F Z 0.1μF/25V or	CHD1EZ80Z104

Ref.No.	Description	PartNo.
	CHIP CERAMIC F Z 0.1μF/16V or	CHD1CZ80F104
	CHIP CERAMIC F Z 0.1μF/25V or	CHD1EZ80F104
	CHIP CERAMIC F Z 0.1μF/16V	CHD1CZ80Z104
C159	CHIP CERAMIC F Z 0.1μF/25V or	CHD1EZ80Z104
	CHIP CERAMIC F Z 0.1μF/16V or	CHD1CZ80F104
	CHIP CERAMIC F Z 0.1μF/25V or	CHD1EZ80F104
	CHIP CERAMIC F Z 0.1μF/16V	CHD1CZ80Z104
C160	CHIP CERAMIC F Z 0.022μF/25V or	CHD1EZ80Z223
	CHIP CERAMIC F Z 0.022μF/50V or	CHD1JZ80Z223
	CHIP CERAMIC F Z 0.022μF/50V or	CHD1JZ80F223
	CHIP CERAMIC F Z 0.022μF/25V	CHD1EZ80F223
C161	CHIP CERAMIC F Z 0.1μF/25V or	CHD1EZ80Z104
	CHIP CERAMIC F Z 0.1μF/16V or	CHD1CZ80F104
	CHIP CERAMIC F Z 0.1μF/25V or	CHD1EZ80F104
	CHIP CERAMIC F Z 0.1μF/16V	CHD1CZ80Z104
C162	ELECTROLYTIC 47μF/6.3V M	121R476V
C164	CHIP TANTAL 2.2μF/10V M or	1224225C
	CHIP TANTAL 2.2μF/10V M	CA1A225KC003
C165	ELECTROLYTIC 47μF/6.3V M	121R476V
C166	CHIP CERAMIC F Z 0.1μF/25V or	CHD1EZ80Z104
	CHIP CERAMIC F Z 0.1μF/16V or	CHD1CZ80F104
	CHIP CERAMIC F Z 0.1μF/25V or	CHD1EZ80F104
	CHIP CERAMIC F Z 0.1μF/16V	CHD1CZ80Z104
C167	CHIP TANTAL 1μF/16V M or	1225105C
	CHIP TANTAL 1μF/16V M	CA1C105KC003
C168	CHIP TANTAL 1μF/16V M or	1225105C
	CHIP TANTAL 1μF/16V M	CA1C105KC003
C170	CHIP CERAMIC F Z 0.022μF/25V or	CHD1EZ80Z223
	CHIP CERAMIC F Z 0.022μF/50V or	CHD1JZ80Z223
	CHIP CERAMIC F Z 0.022μF/50V or	CHD1JZ80F223
	CHIP CERAMIC F Z 0.022μF/25V	CHD1EZ80F223
C171	ELECTROLYTIC 33μF/10V M	121S336V
C172	CHIP CERAMIC F Z 0.1μF/25V or	CHD1EZ80Z104
	CHIP CERAMIC F Z 0.1μF/16V or	CHD1CZ80F104
	CHIP CERAMIC F Z 0.1μF/25V or	CHD1EZ80F104
	CHIP CERAMIC F Z 0.1μF/16V	CHD1CZ80Z104
C173	CHIP CERAMIC F Z 0.01μF/50V or	CHD1JZ80Z103
	CHIP CERAMIC F Z 0.01μF/25V or	CHD1EZ80Z103
	CHIP CERAMIC F Z 0.01μF/50V or	CHD1JZ80F103
	CHIP CERAMIC F Z 0.01μF/25V	CHD1EZ80F103
C174	ELECTROLYTIC 22μF/6.3V M	121R226V
C175	ELECTROLYTIC 22μF/6.3V M	121R226V
C176	CHIP CERAMIC F Z 0.1μF/25V or	CHD1EZ80Z104
	CHIP CERAMIC F Z 0.1μF/16V or	CHD1CZ80F104
	CHIP CERAMIC F Z 0.1μF/25V or	CHD1EZ80F104
	CHIP CERAMIC F Z 0.1μF/16V	CHD1CZ80Z104
C177	CHIP TANTAL 1μF/16V M or	1225105C
	CHIP TANTAL 1μF/16V M	CA1C105KC003
C178	CHIP CERAMIC SL J 18PF/50V	CHD1JJ8SL180
C179	CHIP CERAMIC F Z 0.01μF/50V or	CHD1JZ80Z103
	CHIP CERAMIC F Z 0.01μF/25V or	CHD1EZ80Z103
	CHIP CERAMIC F Z 0.01μF/50V or	CHD1JZ80F103
	CHIP CERAMIC F Z 0.01μF/25V	CHD1EZ80F103
C180	CHIP CERAMIC F Z 0.047μF/16V or	CHD1CZ80Z473
	CHIP CERAMIC F Z 0.047μF/25V or	CHD1EZ80Z473
	CHIP CERAMIC F Z 0.047μF/25V or	CHD1EZ80F473
	CHIP CERAMIC F Z 0.047μF/16V or	CHD1CZ80F473
	CHIP CERAMIC F Z 0.047μF/50V	CHD1JZ80F473
C181	ELECTROLYTIC 10μF/16V M	121T106V
C182	CHIP CERAMIC F Z 0.022μF/25V or	CHD1EZ80Z223

Ref.No.	Description	PartNo.
	CHIP CERAMIC F Z 0.022μF/50V or	CHD1JZ80Z223
	CHIP CERAMIC F Z 0.022μF/50V or	CHD1JZ80F223
	CHIP CERAMIC F Z 0.022μF/25V	CHD1EZ80F223
C183	CHIP CERAMIC F Z 0.022μF/25V or	CHD1EZ80Z223
	CHIP CERAMIC F Z 0.022μF/50V or	CHD1JZ80Z223
	CHIP CERAMIC F Z 0.022μF/50V or	CHD1JZ80F223
	CHIP CERAMIC F Z 0.022μF/25V	CHD1EZ80F223
C186	CHIP CERAMIC F Z 0.01μF/50V or	CHD1JZ80Z103
	CHIP CERAMIC F Z 0.01μF/25V or	CHD1EZ80Z103
	CHIP CERAMIC F Z 0.01μF/50V or	CHD1JZ80F103
	CHIP CERAMIC F Z 0.01μF/25V	CHD1EZ80F103
C187	CHIP CERAMIC 1μF/16V F 2125 or	CA1C010KC001
	CHIP CERAMIC 1μF/16V F 2125 or	CA1C010MR002
	CHIP CERAMIC 1μF/16V F 2125	CA1C010TU003
C188	CHIP CERAMIC 1μF/16V F 2125 or	CA1C010KC001
	CHIP CERAMIC 1μF/16V F 2125 or	CA1C010MR002
	CHIP CERAMIC 1μF/16V F 2125	CA1C010TU003
C192	CHIP CERAMIC F Z 0.022μF/25V or	CHD1EZ80Z223
	CHIP CERAMIC F Z 0.022μF/50V or	CHD1JZ80Z223
	CHIP CERAMIC F Z 0.022μF/50V or	CHD1JZ80F223
	CHIP CERAMIC F Z 0.022μF/25V	CHD1EZ80F223
C194	CHIP CERAMIC F Z 0.01μF/50V or	CHD1JZ80Z103
	CHIP CERAMIC F Z 0.01μF/25V or	CHD1EZ80Z103
	CHIP CERAMIC F Z 0.01μF/50V or	CHD1JZ80F103
	CHIP CERAMIC F Z 0.01μF/25V	CHD1EZ80F103
C195	CHIP CERAMIC SL J 51PF/50V	CHD1JJ8SL510
C199	CHIP CERAMIC SL J 22PF/50V	CHD1JJ8SL220
C205	CHIP CERAMIC F Z 0.01μF/50V or	CHD1JZ80Z103
	CHIP CERAMIC F Z 0.01μF/25V or	CHD1EZ80Z103
	CHIP CERAMIC F Z 0.01μF/50V or	CHD1JZ80F103
	CHIP CERAMIC F Z 0.01μF/25V	CHD1EZ80F103
C206	CHIP CERAMIC CG J 18PF/50V or	CHD1JJ8CG180
	CHIP CERAMIC CH J 18PF/50V	CHD1JJ8CH180
C207	CHIP CERAMIC F Z 0.022μF/25V or	CHD1EZ80Z223
	CHIP CERAMIC F Z 0.022μF/50V or	CHD1JZ80Z223
	CHIP CERAMIC F Z 0.022μF/50V or	CHD1JZ80F223
	CHIP CERAMIC F Z 0.022μF/25V	CHD1EZ80F223
C210	ELECTROLYTIC 10μF/16V M	121T106V
C211	ELECTROLYTIC 10μF/16V M	121T106V
C212	CHIP CERAMIC F Z 0.1μF/25V or	CHD1EZ80Z104
	CHIP CERAMIC F Z 0.1μF/16V or	CHD1CZ80F104
	CHIP CERAMIC F Z 0.1μF/25V or	CHD1EZ80F104
	CHIP CERAMIC F Z 0.1μF/16V	CHD1CZ80Z104
C219	CHIP CERAMIC 1μF/16V F 2125 or	CA1C010KC001
	CHIP CERAMIC 1μF/16V F 2125 or	CA1C010MR002
	CHIP CERAMIC 1μF/16V F 2125	CA1C010TU003
C220	CHIP CERAMIC F Z 0.01μF/50V or	CHD1JZ80Z103
	CHIP CERAMIC F Z 0.01μF/25V or	CHD1EZ80Z103
	CHIP CERAMIC F Z 0.01μF/50V or	CHD1JZ80F103
	CHIP CERAMIC F Z 0.01μF/25V	CHD1EZ80F103
C222	CHIP CERAMIC SL J 22PF/50V	CHD1JJ8SL220
C224	ELECTROLYTIC 33μF/10V M	121S336V
C225	CHIP CERAMIC F Z 0.022μF/25V or	CHD1EZ80Z223
	CHIP CERAMIC F Z 0.022μF/50V or	CHD1JZ80Z223
	CHIP CERAMIC F Z 0.022μF/50V or	CHD1JZ80F223
	CHIP CERAMIC F Z 0.022μF/25V	CHD1EZ80F223
C226	ELECTROLYTIC 10μF/16V M	121T106V
C227	CHIP CERAMIC F Z 0.022μF/25V or	CHD1EZ80Z223
	CHIP CERAMIC F Z 0.022μF/50V or	CHD1JZ80Z223
	CHIP CERAMIC F Z 0.022μF/50V or	CHD1JZ80F223

Ref.No.	Description	PartNo.
	CHIP CERAMIC F Z 0.022μF/25V	CHD1EZ80F223
C229	CHIP CERAMIC F Z 0.022μF/25V or	CHD1EZ80Z223
	CHIP CERAMIC F Z 0.022μF/50V or	CHD1JZ80Z223
	CHIP CERAMIC F Z 0.022μF/50V or	CHD1JZ80F223
	CHIP CERAMIC F Z 0.022μF/25V	CHD1EZ80F223
C230	CHIP CERAMIC F Z 0.022μF/25V or	CHD1EZ80Z223
	CHIP CERAMIC F Z 0.022μF/50V or	CHD1JZ80Z223
	CHIP CERAMIC F Z 0.022μF/50V or	CHD1JZ80F223
	CHIP CERAMIC F Z 0.022μF/25V	CHD1EZ80F223
C231	CHIP CERAMIC F Z 0.01μF/50V or	CHD1JZ80Z103
	CHIP CERAMIC F Z 0.01μF/25V or	CHD1EZ80Z103
	CHIP CERAMIC F Z 0.01μF/50V or	CHD1JZ80F103
	CHIP CERAMIC F Z 0.01μF/25V	CHD1EZ80F103
C232	CHIP CERAMIC B K 0.01μF/25V or	CHD1EK80X103
	CHIP CERAMIC B K 0.01μF/50V or	CHD1JK80X103
	CHIP CERAMIC B K 0.01μF/50V or	CHD1JK80B103
	CHIP CERAMIC B K 0.01μF/25V	CHD1EK80B103
C233	ELECTROLYTIC 4.7μF/25V M	121U475V
C234	CHIP CERAMIC 1μF/16V F 2125 or	CA1C010KC001
	CHIP CERAMIC 1μF/16V F 2125 or	CA1C010MR002
	CHIP CERAMIC 1μF/16V F 2125	CA1C010TU003
C241	CHIP CERAMIC F Z 0.022μF/25V or	CHD1EZ80Z223
	CHIP CERAMIC F Z 0.022μF/50V or	CHD1JZ80Z223
	CHIP CERAMIC F Z 0.022μF/50V or	CHD1JZ80F223
	CHIP CERAMIC F Z 0.022μF/25V	CHD1EZ80F223
C242	ELECTROLYTIC 47μF/6.3V M	121R476V
C243	ELECTROLYTIC 47μF/6.3V M	121R476V
C244	CHIP CERAMIC B K 0.01μF/25V or	CHD1EK80X103
	CHIP CERAMIC B K 0.01μF/50V or	CHD1JK80X103
	CHIP CERAMIC B K 0.01μF/50V or	CHD1JK80B103
	CHIP CERAMIC B K 0.01μF/25V	CHD1EK80B103
C246	CHIP CERAMIC SL J 390PF/50V	CHD1JJ8SL391
C248	CHIP CERAMIC F Z 0.022μF/25V or	CHD1EZ80Z223
	CHIP CERAMIC F Z 0.022μF/50V or	CHD1JZ80Z223
	CHIP CERAMIC F Z 0.022μF/50V or	CHD1JZ80F223
	CHIP CERAMIC F Z 0.022μF/25V	CHD1EZ80F223
C249	ELECTROLYTIC 33μF/6.3V M	121R336V
C250	CHIP CERAMIC CG J 15PF/50V or	CHD1JJ8CG150
	CHIP CERAMIC CH J 15PF/50V	CHD1JJ8CH150
C252	CHIP CERAMIC F Z 0.022μF/25V or	CHD1EZ80Z223
	CHIP CERAMIC F Z 0.022μF/50V or	CHD1JZ80Z223
	CHIP CERAMIC F Z 0.022μF/50V or	CHD1JZ80F223
	CHIP CERAMIC F Z 0.022μF/25V	CHD1EZ80F223
C255	CHIP CERAMIC F Z 0.022μF/25V or	CHD1EZ80Z223
	CHIP CERAMIC F Z 0.022μF/50V or	CHD1JZ80Z223
	CHIP CERAMIC F Z 0.022μF/50V or	CHD1JZ80F223
	CHIP CERAMIC F Z 0.022μF/25V	CHD1EZ80F223
C256	ELECTROLYTIC 47μF/6.3V M	121R476V
	CONNECTORS	
CN-10	CONNECTOR(B TO B)16P REC 4-175639-6	JC39T16APH0C
CN-29	B TO B CONNECTOR, 14P 53148-1420	1770430
CN-30	B TO B CONNECTOR, 14P 53148-1420	1770430
CN-31	FPC CONNECTOR, 8P IL-402R- 8S-S1L-SA	JC4RT08NBH0B
	DIODES	
D101	CHIP DIODE MA141K	AMA141KTX***
D102	CHIP DIODE MA141K	AMA141KTX***
D103	CHIP DIODE MA141K	AMA141KTX***
D104	CHIP DIODE DA204U	ADA204UT106*
D105	CHIP DIODE MA141K	AMA141KTX***
D106	VARACTOR 1SV202	A1SV20217TRC

Ref.No.	Description	PartNo.
	ICS	
IC201	IC AN2165FHP	GAN2165FHP00
IC202	IC(COMPARATER) BA10393F(T1)	GBA10393FT1*
IC203	IC TC4W66FTE12L	GC4W66FTE12L
IC204	IC BA10324FT1	GBA10324FT10
IC205	IC AN2365S-(T1)	GAN2365ST100
IC206	IC MN3820S-T1	14DN526
IC207	IC AN2457SB-(E1)	GAN2457SBE10
IC208	IC MSM6819MS-KR4	GSM6819MSKR4
IC209	IC MN73033XRA	GMN73033XRA0
	COILS	
L103	CHIP INDUCTOR 15UH K or	1170718
	CHIP INDUCTOR 15UH K or	1170624
	CHIP INDUCTOR 15UH K or	117N599
	CHIP INDUCTOR 15UH K 3225 or	LLACKE8FS150
	CHIP INDUCTOR 15UH J	1170732
L105	CHIP INDUCTOR 33UH K or	1170722
	CHIP INDUCTOR 33UH K or	1170628
	CHIP INDUCTOR 33UH K or	117N603
	CHIP INDUCTOR 33UH K 3225 or	LLACKE8FS330
	CHIP INDUCTOR 33UH J	1170736
L109	CHIP INDUCTOR 100UH K or	1170728
	CHIP INDUCTOR 100UH K or	1170633
	CHIP INDUCTOR 100UH K or	117N608
	CHIP INDUCTOR 100UH K 3225 or	LLACKE8FS101
	CHIP INDUCTOR 100UH J	1170742
L111	CHIP INDUCTOR 15UH K or	1170718
	CHIP INDUCTOR 15UH K or	1170624
	CHIP INDUCTOR 15UH K or	117N599
	CHIP INDUCTOR 15UH K 3225 or	LLACKE8FS150
	CHIP INDUCTOR 15UH J	1170732
L115	CHIP INDUCTOR 100UH J or	1170742
	CHIP INDUCTOR 100UH J or	1170756
	CHIP INDUCTOR 100UH J or	117N711
	CHIP INDUCTOR 100UH J 3225	LLACJE8FS101
L117	CHIP INDUCTOR 15UH K or	1170718
	CHIP INDUCTOR 15UH K or	1170624
	CHIP INDUCTOR 15UH K or	117N599
	CHIP INDUCTOR 15UH K 3225 or	LLACKE8FS150
	CHIP INDUCTOR 15UH J	1170732
L119	CHIP INDUCTOR 15UH K or	1170718
	CHIP INDUCTOR 15UH K or	1170624
	CHIP INDUCTOR 15UH K or	117N599
	CHIP INDUCTOR 15UH K 3225 or	LLACKE8FS150
	CHIP INDUCTOR 15UH J	1170732
L121	CHIP INDUCTOR 100UH K or	1170728
	CHIP INDUCTOR 100UH K or	1170633
	CHIP INDUCTOR 100UH K or	117N608
	CHIP INDUCTOR 100UH K 3225 or	LLACKE8FS101
	CHIP INDUCTOR 100UH J	1170742
L123	CHIP INDUCTOR 15UH K or	1170718
	CHIP INDUCTOR 15UH K or	1170624
	CHIP INDUCTOR 15UH K or	117N599
	CHIP INDUCTOR 15UH K 3225 or	LLACKE8FS150
	CHIP INDUCTOR 15UH J	1170732
L124	CHIP INDUCTOR 68UH J or	1170740
	CHIP INDUCTOR 68UH J or	1170754
	CHIP INDUCTOR 68UH J or	117N709
	CHIP INDUCTOR 68UH J 3225	LLACJE8FS680
L125	CHIP INDUCTOR 15UH K or	1170718

Ref.No.	Description	PartNo.
	CHIP INDUCTOR 15UH K or	1170624
	CHIP INDUCTOR 15UH K or	117N599
	CHIP INDUCTOR 15UH K 3225 or	LLACKE8FS150
	CHIP INDUCTOR 15UH J	1170732
L127	CHIP INDUCTOR 15UH K or	1170718
	CHIP INDUCTOR 15UH K or	1170624
	CHIP INDUCTOR 15UH K or	117N599
	CHIP INDUCTOR 15UH K 3225 or	LLACKE8FS150
	CHIP INDUCTOR 15UH J	1170732
L131	CHIP INDUCTOR 15UH K or	1170718
	CHIP INDUCTOR 15UH K or	1170624
	CHIP INDUCTOR 15UH K or	117N599
	CHIP INDUCTOR 15UH K 3225 or	LLACKE8FS150
	CHIP INDUCTOR 15UH J	1170732
	FILTERS	
LC101	FILTER, TRAP NLT4532T-S4R8A	1813384
LC102	TLAP FILTER 9.6MHZ NLT4532-S9R7	FAE965CTE001
	TRANSISTORS	
Q101	CHIP 2SC4081(R) or	QSC4081T106R
	CHIP 2SC4081(S)	QSC4081T106S
Q102	CHIP 2SA1576(R) or	QSA1576T106R
	CHIP 2SA1576(S)	QSA1576T106S
Q103	CHIP 2SA1576(R) or	QSA1576T106R
	CHIP 2SA1576(S)	QSA1576T106S
Q107	CHIP 2SA1576(R) or	QSA1576T106R
	CHIP 2SA1576(S)	QSA1576T106S
Q108	CHIP 2SA1576(R) or	QSA1576T106R
	CHIP 2SA1576(S)	QSA1576T106S
Q109	CHIP 2SA1576(R) or	QSA1576T106R
	CHIP 2SA1576(S)	QSA1576T106S
Q114	CHIP 2SC4081(R) or	QSC4081T106R
	CHIP 2SC4081(S)	QSC4081T106S
Q115	CHIP 2SC4081(R) or	QSC4081T106R
	CHIP 2SC4081(S)	QSC4081T106S
Q116	CHIP 2SC4081(R) or	QSC4081T106R
	CHIP 2SC4081(S)	QSC4081T106S
Q117	CHIP 2SC4081(R) or	QSC4081T106R
	CHIP 2SC4081(S)	QSC4081T106S
Q118	CHIP 2SC4081(R) or	QSC4081T106R
	CHIP 2SC4081(S)	QSC4081T106S
Q120	CHIP 2SC4081(R) or	QSC4081T106R
	CHIP 2SC4081(S)	QSC4081T106S
Q122	CHIP 2SC3929(R) or	Q2SC3929RTX*
	CHIP 2SC3929(S) or	Q2SC3929STX*
	CHIP 2SC3929(T)	Q2SC3929TTX*
Q123	CHIP 2SC4081(R) or	QSC4081T106R
	CHIP 2SC4081(S)	QSC4081T106S
Q124	CHIP 2SC3929(R) or	Q2SC3929RTX*
	CHIP 2SC3929(S) or	Q2SC3929STX*
	CHIP 2SC3929(T)	Q2SC3929TTX*
Q126	CHIP 2SA1576(R) or	QSA1576T106R
	CHIP 2SA1576(S)	QSA1576T106S
Q131	CHIP 2SA1576(R) or	QSA1576T106R
	CHIP 2SA1576(S)	QSA1576T106S
Q132	CHIP 2SA1576(R) or	QSA1576T106R
	CHIP 2SA1576(S)	QSA1576T106S
Q133	CHIP 2SA1576(R) or	QSA1576T106R
	CHIP 2SA1576(S)	QSA1576T106S
Q134	CHIP 2SA1576(R) or	QSA1576T106R
	CHIP 2SA1576(S)	QSA1576T106S

Ref.No.	Description	PartNo.
Q139	CHIP 2SA1576(R) or	QSA1576T106R
	CHIP 2SA1576(S)	QSA1576T106S
Q140	CHIP 2SA1576(R) or	QSA1576T106R
	CHIP 2SA1576(S)	QSA1576T106S
Q143	CHIP FET 2SK94(X1) or	Q2SK94T1X1**
	CHIP FET 2SK94(X2)	Q2SK94T1X2**
	RESISTORS	
QR101	CHIP RES. BUILT-IN DTA124EU	QTA124EUT106
R102	CHIP 1/16W J 330KΩ	RCXGJR8Z0334
R103	CHIP 1/16W J 56KΩ	RCXGJR8Z0563
R104	CHIP 1/16W J 10KΩ	RCXGJR8Z0103
R105	CHIP 1/16W J 27KΩ	RCXGJR8Z0273
R106	CHIP 1/16W J 10KΩ	RCXGJR8Z0103
R107	CHIP 1/16W J 1KΩ	RCXGJR8Z0102
R108	CHIP 1/16W J 33KΩ	RCXGJR8Z0333
R110	CHIP 1/16W J 10KΩ	RCXGJR8Z0103
R111	CHIP 1/16W J 18KΩ	RCXGJR8Z0183
R112	CHIP 1/16W J 560Ω	RCXGJR8Z0561
R113	CHIP 1/16W J 10KΩ	RCXGJR8Z0103
R114	CHIP 1/16W J 3.3KΩ	RCXGJR8Z0332
R115	CHIP 1/16W J 1KΩ	RCXGJR8Z0102
R116	CHIP 1/16W J 1KΩ	RCXGJR8Z0102
R117	CHIP 1/16W J 4.7KΩ	RCXGJR8Z0472
R118	CHIP 1/16W J 68KΩ	RCXGJR8Z0683
R119	CHIP 1/16W J 10KΩ	RCXGJR8Z0103
R120	CHIP 1/16W J 3.3KΩ	RCXGJR8Z0332
R121	CHIP 1/16W J 1KΩ	RCXGJR8Z0102
R122	CHIP 1/16W J 4.7KΩ	RCXGJR8Z0472
R123	CHIP 1/16W J 1KΩ	RCXGJR8Z0102
R124	CHIP 1/16W J 8.2KΩ	RCXGJR8Z0822
R125	CHIP 1/16W J 47KΩ	RCXGJR8Z0473
R126	CHIP 1/16W J 330KΩ	RCXGJR8Z0334
R131	CHIP 1/16W J 62KΩ	RCXGJR8Z0623
R134	CHIP 1/16W J 10KΩ	RCXGJR8Z0103
R137	CHIP 1/16W J 270KΩ	RCXGJR8Z0274
R138	CHIP 1/16W J 27KΩ	RCXGJR8Z0273
R139	CHIP 1/16W J 8.2KΩ	RCXGJR8Z0822
R140	CHIP 1/16W J 5.6KΩ	RCXGJR8Z0562
R143	CHIP 1/16W J 10Ω	RCXGJR8Z0100
R144	CHIP 1/16W J 12KΩ	RCXGJR8Z0123
R145	CHIP 1/16W J 100KΩ	RCXGJR8Z0104
R146	CHIP 1/16W J 6.8KΩ	RCXGJR8Z0682
R147	CHIP 1/16W J 1.5KΩ	RCXGJR8Z0152
R148	CHIP 1/16W J 15KΩ	RCXGJR8Z0153
R149	CHIP 1/16W J 56KΩ	RCXGJR8Z0563
R150	CHIP 1/16W J 10KΩ	RCXGJR8Z0103
R151	CHIP 1/16W J 150KΩ	RCXGJR8Z0154
R152	CHIP 1/16W J 1MΩ	RCXGJR8Z0105
R153	CHIP 1/16W J 12KΩ	RCXGJR8Z0123
R154	CHIP 1/16W J 10KΩ	RCXGJR8Z0103
R155	CHIP 1/16W J 1KΩ	RCXGJR8Z0102
R156	CHIP 1/16W J 1KΩ	RCXGJR8Z0102
R157	CHIP 1/16W J 1KΩ	RCXGJR8Z0102
R158	CHIP 1/16W J 10KΩ	RCXGJR8Z0103
R162	CHIP 1/16W J 1.2KΩ	RCXGJR8Z0122
R163	CHIP 1/16W J 2.2KΩ	RCXGJR8Z0222
R164	CHIP 1/16W J 10KΩ	RCXGJR8Z0103
R167	CHIP 1/16W J 68KΩ	RCXGJR8Z0683
R168	CHIP 1/16W J 10KΩ	RCXGJR8Z0103
R169	CHIP 1/16W J 1KΩ	RCXGJR8Z0102

Ref.No.	Description	PartNo.
R170	CHIP 1/16W J 27KΩ	RCXGJR8Z0273
R171	CHIP 1/16W J 18KΩ	RCXGJR8Z0183
R172	CHIP 1/16W J 1KΩ	RCXGJR8Z0102
R173	CHIP 1/16W J 1KΩ	RCXGJR8Z0102
R174	CHIP 1/16W J 2.2KΩ	RCXGJR8Z0222
R175	CHIP 1/16W J 30KΩ	RCXGJR8Z0303
R176	CHIP 1/16W J 56KΩ	RCXGJR8Z0563
R178	CHIP 1/16W J 2.2KΩ	RCXGJR8Z0222
R179	CHIP 1/16W J 3.9KΩ	RCXGJR8Z0392
R180	CHIP 1/16W J 0Ω	RCXGJR8Z0000
R181	CHIP 1/16W J 10KΩ	RCXGJR8Z0103
R182	CHIP 1/16W J 120KΩ	RCXGJR8Z0124
R183	CHIP 1/16W J 2.2KΩ	RCXGJR8Z0222
R184	CHIP 1/16W J 560Ω	RCXGJR8Z0561
R185	CHIP 1/16W J 10KΩ	RCXGJR8Z0103
R186	CHIP 1/16W J 3.9KΩ	RCXGJR8Z0392
R187	CHIP 1/16W J 22KΩ	RCXGJR8Z0223
R188	CHIP 1/16W J 18KΩ	RCXGJR8Z0183
R189	CHIP 1/16W J 120KΩ	RCXGJR8Z0124
R190	CHIP 1/16W J 10KΩ	RCXGJR8Z0103
R191	CHIP 1/16W J 1KΩ	RCXGJR8Z0102
R192	CHIP 1/16W J 3.9KΩ	RCXGJR8Z0392
R193	CHIP 1/16W J 470Ω	RCXGJR8Z0471
R194	CHIP 1/16W J 3.3KΩ	RCXGJR8Z0332
R195	CHIP 1/16W J 5.6KΩ	RCXGJR8Z0562
R196	CHIP 1/16W J 100Ω	RCXGJR8Z0101
R197	CHIP 1/16W J 1.2KΩ	RCXGJR8Z0122
R198	CHIP 1/16W J 4.7KΩ	RCXGJR8Z0472
R199	CHIP 1/16W J 1KΩ	RCXGJR8Z0102
R201	CHIP 1/16W J 0Ω	RCXGJR8Z0000
R202	CHIP 1/16W J 1.5KΩ	RCXGJR8Z0152
R203	CHIP 1/16W J 1.5KΩ	RCXGJR8Z0152
R204	CHIP 1/16W J 4.7KΩ	RCXGJR8Z0472
R205	CHIP 1/16W J 4.7KΩ	RCXGJR8Z0472
R206	CHIP 1/16W J 10KΩ	RCXGJR8Z0103
R207	CHIP 1/16W J 10KΩ	RCXGJR8Z0103
R208	CHIP 1/16W J 10KΩ	RCXGJR8Z0103
R209	CHIP 1/16W J 5.6KΩ	RCXGJR8Z0562
R210	CHIP 1/16W J 510Ω	RCXGJR8Z0511
R211	CHIP 1/16W J 100Ω	RCXGJR8Z0101
R212	CHIP 1/16W J 6.8KΩ	RCXGJR8Z0682
R213	CHIP 1/16W J 18KΩ	RCXGJR8Z0183
R215	CHIP 1/16W J 1.2KΩ	RCXGJR8Z0122
R216	CHIP 1/16W J 0Ω	RCXGJR8Z0000
R217	CHIP 1/16W J 1.8KΩ	RCXGJR8Z0182
R218	CHIP 1/16W J 10Ω	RCXGJR8Z0100
R219	CHIP 1/16W J 2.2KΩ	RCXGJR8Z0222
R220	CHIP 1/16W J 24KΩ	RCXGJR8Z0243
R221	CHIP 1/16W J 2.2KΩ	RCXGJR8Z0222
R222	CHIP 1/16W J 680Ω	RCXGJR8Z0681
R223	CHIP 1/16W J 4.7KΩ	RCXGJR8Z0472
R224	CHIP 1/16W J 4.7KΩ	RCXGJR8Z0472
R225	CHIP 1/16W J 330Ω	RCXGJR8Z0331
R226	CHIP 1/16W J 390Ω	RCXGJR8Z0391
R227	CHIP 1/16W J 680Ω	RCXGJR8Z0681
R228	CHIP 1/16W J 680Ω	RCXGJR8Z0681
R229	CHIP 1/16W J 1KΩ	RCXGJR8Z0102
R230	CHIP 1/16W J 2.2KΩ	RCXGJR8Z0222
R232	CHIP 1/16W J 2.2KΩ	RCXGJR8Z0222
R233	CHIP 1/16W J 1KΩ	RCXGJR8Z0102

Ref.No.	Description	PartNo.
R234	CHIP 1/16W J 10KΩ	RCXGJR8Z0103
R235	CHIP 1/16W J 100KΩ	RCXGJR8Z0104
R236	CHIP 1/16W J 4.7KΩ	RCXGJR8Z0472
R237	CHIP 1/16W J 3.3KΩ	RCXGJR8Z0332
R238	CHIP 1/16W J 3.3KΩ	RCXGJR8Z0332
R241	CHIP 1/16W J 4.7KΩ	RCXGJR8Z0472
R242	CHIP 1/16W G 2.7KΩ	RCXGGR8Z0272
R243	CHIP 1/16W J 4.7KΩ	RCXGJR8Z0472
R244	CHIP 1/16W G 1.5KΩ	RCXGGR8Z0152
R245	CHIP 1/16W J 5.6KΩ	RCXGJR8Z0562
R246	CHIP 1/16W J 1KΩ	RCXGJR8Z0102
R247	CHIP 1/16W J 3.3KΩ	RCXGJR8Z0332
R248	CHIP 1/16W J 10Ω	RCXGJR8Z0100
R249	CHIP 1/16W G 5.6KΩ	RCXGGR8Z0562
R250	CHIP 1/16W J 470Ω	RCXGJR8Z0471
R251	CHIP 1/16W J 22KΩ	RCXGJR8Z0223
R252	CHIP 1/16W J 10KΩ	RCXGJR8Z0103
R253	CHIP 1/16W J 10KΩ	RCXGJR8Z0103
R254	CHIP 1/16W J 100KΩ	RCXGJR8Z0104
R255	CHIP 1/16W J 10KΩ	RCXGJR8Z0103
R256	CHIP 1/16W J 18KΩ	RCXGJR8Z0183
R257	CHIP 1/16W J 68KΩ	RCXGJR8Z0683
R258	CHIP 1/16W J 39KΩ	RCXGJR8Z0393
R259	CHIP 1/16W J 18KΩ	RCXGJR8Z0183
R260	CHIP 1/16W J 560KΩ	RCXGJR8Z0564
R261	CHIP 1/16W J 680KΩ	RCXGJR8Z0684
R262	CHIP 1/16W J 56KΩ	RCXGJR8Z0563
R263	CHIP 1/16W J 18KΩ	RCXGJR8Z0183
R264	CHIP 1/16W J 56KΩ	RCXGJR8Z0563
R265	CHIP 1/16W J 27KΩ	RCXGJR8Z0273
R266	CHIP 1/16W J 33KΩ	RCXGJR8Z0333
R267	CHIP 1/16W J 39KΩ	RCXGJR8Z0393
R268	CHIP 1/16W J 22KΩ	RCXGJR8Z0223
R269	CHIP 1/16W J 5.6KΩ	RCXGJR8Z0562
R270	CHIP 1/16W J 4.7KΩ	RCXGJR8Z0472
R271	CHIP 1/16W J 39KΩ	RCXGJR8Z0393
R272	CHIP 1/16W J 27KΩ	RCXGJR8Z0273
R273	CHIP 1/16W J 24KΩ	RCXGJR8Z0243
R274	CHIP 1/16W J 56KΩ	RCXGJR8Z0563
R275	CHIP 1/16W J 20KΩ	RCXGJR8Z0203
R276	CHIP 1/16W J 56KΩ	RCXGJR8Z0563
R277	CHIP 1/16W J 20KΩ	RCXGJR8Z0203
R278	CHIP 1/16W J 39KΩ	RCXGJR8Z0393
R279	CHIP 1/16W J 39KΩ	RCXGJR8Z0393
R280	CHIP 1/16W J 30KΩ	RCXGJR8Z0303
R281	CHIP 1/16W J 330Ω	RCXGJR8Z0331
R282	CHIP 1/16W J 68KΩ	RCXGJR8Z0683
R283	CHIP 1/16W J 330Ω	RCXGJR8Z0331
R284	CHIP 1/16W J 68KΩ	RCXGJR8Z0683
R285	CHIP 1/16W J 10KΩ	RCXGJR8Z0103
R286	CHIP 1/16W J 10KΩ	RCXGJR8Z0103
R287	CHIP 1/16W J 3.9KΩ	RCXGJR8Z0392
R288	CHIP 1/16W J 3.9KΩ	RCXGJR8Z0392
R291	CHIP 1/16W J 1KΩ	RCXGJR8Z0102
R292	CHIP 1/16W J 1KΩ	RCXGJR8Z0102
R293	CHIP 1/16W J 10KΩ	RCXGJR8Z0103
R294	CHIP 1/16W J 10KΩ	RCXGJR8Z0103
R295	CHIP 1/16W J 4.7KΩ	RCXGJR8Z0472
R296	CHIP 1/16W J 5.6KΩ	RCXGJR8Z0562
R297	CHIP 1/16W J 10KΩ	RCXGJR8Z0103

Ref.No.	Description	PartNo.
R298	CHIP 1/16W J 330KΩ	RCXGJR8Z0334
R299	CHIP 1/16W J 100KΩ	RCXGJR8Z0104
RR01	CHIP 1/16W J 27KΩ	RCXGJR8Z0273
RR02	CHIP 1/16W J 18KΩ	RCXGJR8Z0183
RR03	CHIP 1/16W G 22KΩ	RCXGGR8Z0223
RR04	CHIP 1/16W G 12KΩ	RCXGGR8Z0123
RR05	CHIP 1/16W G 24KΩ	RCXGGR8Z0243
RR06	CHIP 1/16W G 15KΩ	RCXGGR8Z0153
RR07	CHIP 1/16W G 560Ω	RCXGGR8Z0561
RR08	CHIP 1/16W G 36KΩ	RCXGGR8Z0363
RR09	CHIP 1/16W G 22KΩ	RCXGGR8Z0223
RR10	CHIP 1/16W J 15KΩ	RCXGJR8Z0153
RR11	CHIP 1/16W J 820Ω	RCXGJR8Z0821
RR12	CHIP 1/16W J 18KΩ	RCXGJR8Z0183
RR13	CHIP 1/16W J 27KΩ	RCXGJR8Z0273
	FILTERS	
T101	L.P.F.(4.83MHZ) RXV-709N or	FAL485CMG007
	L.P.F.(4.83MHZ) F-K4-RT/036083 or	FAL485CMM006
	L.P.F.(4.83MHZ) S-061-851	FAL485CSF005
T102	L.P.F.(4.83MHZ) RXV-709N or	FAL485CMG007
	L.P.F.(4.83MHZ) F-K4-RT/036083 or	FAL485CMM006
	L.P.F.(4.83MHZ) S-061-851	FAL485CSF005
	VOLUMES	
VR102	CHIP P.O.T. 10KΩ B X	238N267C
VR104	CHIP P.O.T. 10KΩ B X	238N267C
VR105	CHIP P.O.T. 20KΩ B X	238N268C
VR106	CHIP P.O.T. 10KΩ B X	238N267C
VR108	CHIP P.O.T. 10KΩ B X	238N267C
VR109	CHIP P.O.T. 5KΩ B X	238N266C
VR110	CHIP P.O.T. 5KΩ B X	238N266C
VR114	CHIP P.O.T. 2KΩ B X	238N265C
VR115	CHIP P.O.T. 2KΩ B X	238N265C
VR116	CHIP P.O.T. 2KΩ B X	238N265C
VR117	CHIP P.O.T. 2KΩ B X	238N265C
VR120	CHIP P.O.T. 500Ω B X	238N263C
VR129	CHIP P.O.T. 5KΩ B X	238N266C
VR132	CHIP P.O.T. 20KΩ B X	238N268C
VR133	CHIP P.O.T. 20KΩ B X	238N268C
VR135	CHIP P.O.T. 10KΩ B X	238N267C
VR138	CHIP P.O.T. 50KΩ B X	238N269C
VR140	CHIP P.O.T. 5KΩ B X	238N266C
	MISCELLANEOUS	
TC101	CHIP TRIMMER 20PF or	CVC2000T1003
	CHIP TRIMMER 20PF	1280185C
TP102	CHECKER CHIP RCU00000C	XU0C000AL001
TP103	CHECKER CHIP RCU00000C	XU0C000AL001
TP104	CHECKER CHIP RCU00000C	XU0C000AL001
TP107	CHECKER CHIP RCU00000C	XU0C000AL001
TP108	CHECKER CHIP RCU00000C	XU0C000AL001
TP109	CHECKER CHIP RCU00000C	XU0C000AL001
TP111	CHECKER CHIP RCU00000C	XU0C000AL001
TP112	CHECKER CHIP RCU00000C	XU0C000AL001
TP113	CHECKER CHIP RCU00000C	XU0C000AL001
TP114	CHECKER CHIP RCU00000C	XU0C000AL001
TP115	CHECKER CHIP RCU00000C	XU0C000AL001
TP116	CHECKER CHIP RCU00000C	XU0C000AL001
TP117	CHECKER CHIP RCU00000C	XU0C000AL001
X101	X'TAL 17MHZ	FXC176LCT001

EVF PCB ASSEMBLY

Ref.No.	Description	PartNo.
	EVF PCB ASSEMBLY CONSISTS OF THE FOLLOWING:	0VSA04005
	CAPACITORS	
C801	CHIP CERAMIC F Z 0.33μF/16V	CA1C334RM001
C802	CHIP CERAMIC B K 0.0015μF/50V	12B3152C
C803	ELECTROLYTIC 100μF/6.3V M H5	121R107S
C804	CHIP CERAMIC F Z 0.022μF/25V	12F2223C
C805	CHIP CERAMIC F Z 0.33μF/16V	CA1C334RM001
C806	STACKED FILM 0.1μF/50V J	125U104S
C807	CHIP CERAMIC F Z 0.1μF/50V	12F3104C
C808	CHIP CERAMIC SL J 33PF/50V	1270330C
C809	ELECTROLYTIC 4.7μF/50V M H7	526W475S
C810	CHIP CERAMIC F Z 0.33μF/16V	CA1C334RM001
C811	ELECTROLYTIC 100μF/6.3V M	122Z638S
C812	ELECTROLYTIC 100μF/6.3V M	122Z638S
C813	ELECTROLYTIC 100μF/6.3V M	122Z638S
C814	MYLAR 3900PF/100V K or	CA2A392MS001
	MYLAR 3900PF/100V K	CA2A392MS002
C815	CERAMIC B K 1000PF/1KV	122Z739S
C817	CHIP CERAMIC F Z 0.047μF/25V	12F2473C
	CONNECTORS	
CL-2	CONNECTOR ASS'Y 5P	WX1C1580-002
CN801	STRAIGHT PIN HEADER, 4P	1770488
D801	DIODE ERA91-02	AERA9102BPRB
	IC	
IC801	EVF DEFLECTION IC BA7147F-T1	GBA7147FT100
	COILS	
L801	INDUCTOR 56UH-J-5FT or	LLARJBSFS560
	INDUCTOR 56UH J	1170934
L803⚠	RINEALITY COIL ELH-5L225N	LLBD00PMS002
L804⚠	DEFLECTION YOKE ELY-06V572C	LLBY000MS001
	TRANSISTORS	
Q801	CHIP 2SD1767(Q) or	QSD1767T100Q
	CHIP 2SD1767(R)	QSD1767T100R
Q802	CHIP 2SA1037(R)	QSA1037T146R
Q803	CHIP 2SA1037(R)	QSA1037T146R
	RESISTORS	
R801	CHIP 1/16W G 100KΩ	RCXGGR8Z0104
R802	CHIP 1/16W G 15KΩ	RCXGGR8Z0153
R803	CHIP 1/16W J 390KΩ	RCXGJR8Z0394
R804	CHIP 1/16W J 39KΩ	RCXGJR8Z0393
R805	CHIP 1/16W J 470Ω	RCXGJR8Z0471
R806	CHIP 1/10W J 100Ω	134F101C
R807	CHIP 1/10W J 3.9Ω	134F399C
R808	CHIP 1/10W G 20KΩ	134G203C
R809	CHIP 1/10W J 3.3KΩ	134F332C
R810	CHIP 1/16W J 24KΩ	RCXGJR8Z0243
R811	CHIP 1/10W J 1MΩ	134F105C
R812	CHIP 1/10W J 2.2KΩ	134F222C
R813	CHIP 1/10W J 1.5MΩ	134F155C
R814	CHIP 1/10W J 1.5MΩ	134F155C
R815	CHIP 1/10W J 3.3MΩ	134F335C
R816	CHIP 1/10W J 12Ω	134F120C
R817	CHIP 1/10W J 470Ω	134F471C
R819	CHIP 1/10W J 30Ω	134F300C
R820	CHIP 1/10W J 560Ω	134F561C
R822	CHIP 1/16W J 27KΩ	RCXGJR8Z0273
R823	CHIP 1/10W J 0Ω	134F000C

Ref.No.	Description	PartNo.
	MISCELLANEOUS	
T801⚠	FLY-BACK TRANS ETF-08L11A	LTF11EPMS001
VR802	CHIP P.O.T. 220Ω B X	238N262C
VR803	POTENTIOMETER EVN49CA00B26	VZMB205MS001
VR804	POTENTIOMETER EVN49CA00B55	VZMB504MS001
⚠	CRT M01KQM07WB or	TCRT190MS006
⚠	CRT SOCKET CVT2906B040101 or	WX1C1560-001
	P.C.B. EVF(C1580EA)	BC1580F01004
	C1580EA	0VM300880
	C1580EA	0VM300881
	C1580EA	0VM402703

SCV PCB ASSEMBLY

Ref.No.	Description	PartNo.
	SCV PCB ASS'Y	0VSA03984
	CONSISTS OF THE FOLLOWING:	
	CAPACITORS	
C572	CHIP TANTAL 10μF/6.3V M or	1223106C
	CHIP TANTAL 10μF/6.3V M	CA0K106KC003
C574	CHIP TANTAL 10μF/6.3V M or	1223106C
	CHIP TANTAL 10μF/6.3V M	CA0K106KC003
C575	CHIP CERAMIC 1μF/16V F 2125 or	CA1C010KC001
	CHIP CERAMIC 1μF/16V F 2125 or	CA1C010MR002
	CHIP CERAMIC 1μF/16V F 2125	CA1C010TU003
C580	CHIP TANTAL 10μF/6.3V M or	1223106C
	CHIP TANTAL 10μF/6.3V M	CA0K106KC003
C581	CHIP TANTAL 10μF/6.3V M or	1223106C
	CHIP TANTAL 10μF/6.3V M	CA0K106KC003
C582	ELECTROLYTIC 47μF/16V M	121T476V
C583	CHIP CERAMIC F Z 0.01μF/50V or	CHD1JZ80F103
	CHIP CERAMIC F Z 0.01μF/25V or	CHD1EZ80F103
	CHIP CERAMIC F Z 0.01μF/50V or	CHD1JZ80Z103
	CHIP CERAMIC F Z 0.01μF/25V	CHD1EZ80Z103
C584	ELECTROLYTIC 2.2μF/50V M NP	122Z201
C590	CHIP CERAMIC F Z 0.01μF/50V or	CHD1JZ80F103
	CHIP CERAMIC F Z 0.01μF/25V or	CHD1EZ80F103
	CHIP CERAMIC F Z 0.01μF/50V or	CHD1JZ80Z103
	CHIP CERAMIC F Z 0.01μF/25V	CHD1EZ80Z103
C591	CHIP CERAMIC F Z 0.22μF/25V	12F2224C
C592	ELECTROLYTIC 10μF/10V H=5 NP	122Z766
C601	CHIP CERAMIC SL J 22PF/50V	CHD1JJ8SL220
C602	CHIP CERAMIC SL J 22PF/50V	CHD1JJ8SL220
C603	CHIP TANTAL 10μF/6.3V M or	1223106C
	CHIP TANTAL 10μF/6.3V M	CA0K106KC003
C604	CHIP CERAMIC F Z 0.01μF/50V or	CHD1JZ80F103
	CHIP CERAMIC F Z 0.01μF/25V or	CHD1EZ80F103
	CHIP CERAMIC F Z 0.01μF/50V or	CHD1JZ80Z103
	CHIP CERAMIC F Z 0.01μF/25V	CHD1EZ80Z103
C605	CHIP CERAMIC F Z 0.022μF/50V or	CHD1JZ80F223
	CHIP CERAMIC F Z 0.022μF/25V or	CHD1EZ80F223
	CHIP CERAMIC F Z 0.022μF/50V or	CHD1JZ80Z223
	CHIP CERAMIC F Z 0.022μF/25V	CHD1EZ80Z223
C606	CHIP CERAMIC 1μF/16V F 2125 or	CA1C010KC001
	CHIP CERAMIC 1μF/16V F 2125 or	CA1C010MR002
	CHIP CERAMIC 1μF/16V F 2125	CA1C010TU003
C607	CHIP CERAMIC F Z 0.1μF/16V or	CHD1CZ80F104
	CHIP CERAMIC F Z 0.1μF/25V or	CHD1EZ80F104
	CHIP CERAMIC F Z 0.1μF/25V or	CHD1EZ80Z104
	CHIP CERAMIC F Z 0.1μF/16V	CHD1CZ80Z104

Ref.No.	Description	PartNo.
C608	CHIP CERAMIC CH J 27PF/50V or	CHD1JJ8CH270
	CHIP CERAMIC CG J 27PF/50V	CHD1JJ8CG270
C609	CHIP CERAMIC CH J 22PF/50V or	CHD1JJ8CH220
	CHIP CERAMIC CG J 22PF/50V	CHD1JJ8CG220
C671	CHIP CERAMIC 1μF/16V F 2125 or	CA1C010KC001
	CHIP CERAMIC 1μF/16V F 2125 or	CA1C010MR002
	CHIP CERAMIC 1μF/16V F 2125	CA1C010TU003
C672	CHIP CERAMIC B K 1000PF/50V or	CHD1JK80B102
	CHIP CERAMIC B K 1000PF/25V or	CHD1EK80B102
	CHIP CERAMIC B K 1000PF/50V or	CHD1JK80X102
	CHIP CERAMIC B K 1000PF/25V	CHD1EK80X102
C673	CHIP CERAMIC F Z 0.01μF/50V or	CHD1JZ80F103
	CHIP CERAMIC F Z 0.01μF/25V or	CHD1EZ80F103
	CHIP CERAMIC F Z 0.01μF/50V or	CHD1JZ80Z103
	CHIP CERAMIC F Z 0.01μF/25V	CHD1EZ80Z103
C674	ELECTROLYTIC 220μF/6.3V M H7	526R227V
C675	CHIP CERAMIC B K 0.047μF/50V or	12B3473C
	CHIP CERAMIC B K 0.047μF/25V	12B2473C
C676	CHIP CERAMIC 1μF/16V F 2125 or	CA1C010KC001
	CHIP CERAMIC 1μF/16V F 2125 or	CA1C010MR002
	CHIP CERAMIC 1μF/16V F 2125	CA1C010TU003
C677	CHIP CERAMIC B K 0.22μF/50V or	72B3224C
	CHIP CERAMIC B K 0.22μF/25V	72B2224C
C678	ELECTROLYTIC 10μF/10V H=5 NP	122Z766
C679	CHIP TANTAL 10μF/6.3V M or	1223106C
	CHIP TANTAL 10μF/6.3V M	CA0K106KC003
C680	CHIP CERAMIC B K 0.1μF/50V or	12B3104C
	CHIP CERAMIC B K 0.1μF/25V	12B2104C
C681	CHIP CERAMIC CH J 68PF/50V or	CHD1JJ8CH680
	CHIP CERAMIC CG J 68PF/50V	CHD1JJ8CG680
C682	CHIP CERAMIC CH J 33PF/50V or	CHD1JJ8CH330
	CHIP CERAMIC CG J 33PF/50V	CHD1JJ8CG330
C683	CHIP CERAMIC CH J 68PF/50V or	CHD1JJ8CH680
	CHIP CERAMIC CG J 68PF/50V	CHD1JJ8CG680
C684	ELECTROLYTIC 220μF/6.3V M H7	526R227V
C685	CHIP CERAMIC F Z 0.01μF/50V or	CHD1JZ80F103
	CHIP CERAMIC F Z 0.01μF/25V or	CHD1EZ80F103
	CHIP CERAMIC F Z 0.01μF/50V or	CHD1JZ80Z103
	CHIP CERAMIC F Z 0.01μF/25V	CHD1EZ80Z103
C686	MYLAR 0.0027μF/50V J	122Z784
C687	CHIP CERAMIC F Z 0.01μF/50V or	CHD1JZ80F103
	CHIP CERAMIC F Z 0.01μF/25V or	CHD1EZ80F103
	CHIP CERAMIC F Z 0.01μF/50V or	CHD1JZ80Z103
	CHIP CERAMIC F Z 0.01μF/25V	CHD1EZ80Z103
C688	CHIP CERAMIC F Z 0.01μF/50V or	CHD1JZ80F103
	CHIP CERAMIC F Z 0.01μF/25V or	CHD1EZ80F103
	CHIP CERAMIC F Z 0.01μF/50V or	CHD1JZ80Z103
	CHIP CERAMIC F Z 0.01μF/25V	CHD1EZ80Z103
C701	ELECTROLYTIC 10μF/16V M	121T106V
C702	CHIP CERAMIC F Z 0.01μF/50V or	CHD1JZ80F103
	CHIP CERAMIC F Z 0.01μF/25V or	CHD1EZ80F103
	CHIP CERAMIC F Z 0.01μF/50V or	CHD1JZ80Z103
	CHIP CERAMIC F Z 0.01μF/25V	CHD1EZ80Z103
C703	CHIP CERAMIC 1μF/16V F 2125 or	CA1C010KC001
	CHIP CERAMIC 1μF/16V F 2125 or	CA1C010MR002
	CHIP CERAMIC 1μF/16V F 2125	CA1C010TU003
C704	CHIP TANTAL 4.7μF/6.3V M or	1223475C
	CHIP TANTAL 4.7μF/6.3V M	CA0K475KC003
C705	CHIP TANTAL 4.7μF/6.3V M or	1223475C
	CHIP TANTAL 4.7μF/6.3V M	CA0K475KC003

Ref.No.	Description	PartNo.
C706	CHIP CERAMIC F Z 0.1μF/16V or	CHD1CZ80F104
	CHIP CERAMIC F Z 0.1μF/25V or	CHD1EZ80F104
	CHIP CERAMIC F Z 0.1μF/25V or	CHD1EZ80Z104
	CHIP CERAMIC F Z 0.1μF/16V	CHD1CZ80Z104
C707	CHIP CERAMIC F Z 0.01μF/50V or	CHD1JZ80F103
	CHIP CERAMIC F Z 0.01μF/25V or	CHD1EZ80F103
	CHIP CERAMIC F Z 0.01μF/50V or	CHD1JZ80Z103
	CHIP CERAMIC F Z 0.01μF/25V	CHD1EZ80Z103
C708	CHIP CERAMIC SL J 470PF/50V	CHD1JJ8SL471
C709	CHIP CERAMIC F Z 0.1μF/16V or	CHD1CZ80F104
	CHIP CERAMIC F Z 0.1μF/25V or	CHD1EZ80F104
	CHIP CERAMIC F Z 0.1μF/25V or	CHD1EZ80Z104
	CHIP CERAMIC F Z 0.1μF/16V	CHD1CZ80Z104
C710	CHIP CERAMIC F Z 0.01μF/50V or	CHD1JZ80F103
	CHIP CERAMIC F Z 0.01μF/25V or	CHD1EZ80F103
	CHIP CERAMIC F Z 0.01μF/50V or	CHD1JZ80Z103
	CHIP CERAMIC F Z 0.01μF/25V	CHD1EZ80Z103
C711	CHIP CERAMIC B K 2200PF/50V or	CHD1JK80B222
	CHIP CERAMIC B K 2200PF/25V or	CHD1EK80B222
	CHIP CERAMIC B K 2200PF/50V or	CHD1JK80X222
	CHIP CERAMIC B K 2200PF/25V	CHD1EK80X222
C712	CHIP CERAMIC SL J 220PF/50V	CHD1JJ8SL221
C713	CHIP CERAMIC F Z 0.01μF/50V or	CHD1JZ80F103
	CHIP CERAMIC F Z 0.01μF/25V or	CHD1EZ80F103
	CHIP CERAMIC F Z 0.01μF/50V or	CHD1JZ80Z103
	CHIP CERAMIC F Z 0.01μF/25V	CHD1EZ80Z103
C714	CHIP CERAMIC B K 4700PF/50V or	CHD1JK80B472
	CHIP CERAMIC B K 4700PF/25V or	CHD1EK80B472
	CHIP CERAMIC B K 4700PF/50V or	CHD1JK80X472
	CHIP CERAMIC B K 4700PF/25V	CHD1EK80X472
C715	CHIP CERAMIC B K 3300PF/50V or	CHD1JK80B332
	CHIP CERAMIC B K 3300PF/25V or	CHD1EK80B332
	CHIP CERAMIC B K 3300PF/50V or	CHD1JK80X332
	CHIP CERAMIC B K 3300PF/25V	CHD1EK80X332
C716	CHIP CERAMIC SL J 330PF/50V	CHD1JJ8SL331
C717	CHIP CERAMIC F Z 0.047μF/50V or	CHD1JZ80F473
	CHIP CERAMIC F Z 0.047μF/25V or	CHD1EZ80F473
	CHIP CERAMIC F Z 0.047μF/16V or	CHD1CZ80F473
	CHIP CERAMIC F Z 0.047μF/25V or	CHD1EZ80Z473
	CHIP CERAMIC F Z 0.047μF/16V	CHD1CZ80Z473
C718	CHIP CERAMIC SL J 22PF/50V	CHD1JJ8SL220
C719	CHIP CERAMIC B K 1500PF/50V or	CHD1JK80B152
	CHIP CERAMIC B K 1500PF/25V or	CHD1EK80B152
	CHIP CERAMIC B K 1500PF/50V or	CHD1JK80X152
	CHIP CERAMIC B K 1500PF/25V	CHD1EK80X152
C720	CHIP CERAMIC SL J 56PF/50V	CHD1JJ8SL560
C721	CHIP CERAMIC SL J 0.001μF/50V	1270102C
C722	CHIP CERAMIC SL J 560PF/50V	CHD1JJ8SL561
C726	CHIP CERAMIC SL J 0.001μF/50V	1270102C
C727	CHIP CERAMIC SL J 0.001μF/50V	1270102C
C728	CHIP CERAMIC B K 0.022μF/25V or	CHD1EK80B223
	CHIP CERAMIC B K 0.022μF/25V or	CHD1EK80X223
	CHIP CERAMIC B K 0.022μF/16V	CHD1CK80X223
C729	CHIP CERAMIC B K 0.022μF/25V or	CHD1EK80B223
	CHIP CERAMIC B K 0.022μF/25V or	CHD1EK80X223
	CHIP CERAMIC B K 0.022μF/16V	CHD1CK80X223
C730	CERAMIC F Z 0.047μF/50V	12F3473
C731	CHIP CERAMIC F Z 0.01μF/50V or	CHD1JZ80F103
	CHIP CERAMIC F Z 0.01μF/25V or	CHD1EZ80F103
	CHIP CERAMIC F Z 0.01μF/50V or	CHD1JZ80Z103

Ref.No.	Description	PartNo.
	CHIP CERAMIC F Z 0.01μF/25V	CHD1EZ80Z103
C732	CHIP CERAMIC F Z 0.01μF/50V or	CHD1JZ80F103
	CHIP CERAMIC F Z 0.01μF/25V or	CHD1EZ80F103
	CHIP CERAMIC F Z 0.01μF/50V or	CHD1JZ80Z103
	CHIP CERAMIC F Z 0.01μF/25V	CHD1EZ80Z103
C733	ELECTROLYTIC 100μF/6.3V M	121R107V
C734	CHIP CERAMIC CH J 33PF/50V or	CHD1JJ8CH330
	CHIP CERAMIC CG J 33PF/50V	CHD1JJ8CG330
C735	CHIP CERAMIC CH J 33PF/50V or	CHD1JJ8CH330
	CHIP CERAMIC CG J 33PF/50V	CHD1JJ8CG330
C736	ELECTROLYTIC 2.2μF/50V M	121W225V
C737	CHIP CERAMIC F Z 0.033μF/50V or	CHD1JZ80F333
	CHIP CERAMIC F Z 0.033μF/25V or	CHD1EZ80F333
	CHIP CERAMIC F Z 0.033μF/16V or	CHD1CZ80F333
	CHIP CERAMIC F Z 0.033μF/50V	CHD1JZ80Z333
C738	ELECTROLYTIC 22μF/6.3V M	121R226V
C739	ELECTROLYTIC 22μF/6.3V M	121R226V
C740	CHIP CERAMIC F Z 0.01μF/50V or	CHD1JZ80F103
	CHIP CERAMIC F Z 0.01μF/25V or	CHD1EZ80F103
	CHIP CERAMIC F Z 0.01μF/50V or	CHD1JZ80Z103
	CHIP CERAMIC F Z 0.01μF/25V	CHD1EZ80Z103
C741	ELECTROLYTIC 100μF/6.3V M	121R107V
C742	CHIP CERAMIC F Z 0.022μF/50V or	CHD1JZ80F223
	CHIP CERAMIC F Z 0.022μF/25V or	CHD1EZ80F223
	CHIP CERAMIC F Z 0.022μF/50V or	CHD1JZ80Z223
	CHIP CERAMIC F Z 0.022μF/25V	CHD1EZ80Z223
C743	CHIP CERAMIC B K 0.047μF/50V or	12B3473C
	CHIP CERAMIC B K 0.047μF/25V	12B2473C
C744	CHIP CERAMIC F Z 0.1μF/16V or	CHD1CZ80F104
	CHIP CERAMIC F Z 0.1μF/25V or	CHD1EZ80F104
	CHIP CERAMIC F Z 0.1μF/25V or	CHD1EZ80Z104
	CHIP CERAMIC F Z 0.1μF/16V	CHD1CZ80Z104
C745	CHIP CERAMIC B K 0.047μF/50V or	12B3473C
	CHIP CERAMIC B K 0.047μF/25V	12B2473C
C750	CHIP CERAMIC F Z 0.1μF/16V or	CHD1CZ80F104
	CHIP CERAMIC F Z 0.1μF/25V or	CHD1EZ80F104
	CHIP CERAMIC F Z 0.1μF/25V or	CHD1EZ80Z104
	CHIP CERAMIC F Z 0.1μF/16V	CHD1CZ80Z104
C752	CHIP CERAMIC F Z 0.01μF/50V or	CHD1JZ80F103
	CHIP CERAMIC F Z 0.01μF/25V or	CHD1EZ80F103
	CHIP CERAMIC F Z 0.01μF/50V or	CHD1JZ80Z103
	CHIP CERAMIC F Z 0.01μF/25V	CHD1EZ80Z103
C753	CHIP CERAMIC B K 0.01μF/50V or	CHD1JK80B103
	CHIP CERAMIC B K 0.01μF/25V or	CHD1EK80B103
	CHIP CERAMIC B K 0.01μF/50V or	CHD1JK80X103
	CHIP CERAMIC B K 0.01μF/25V	CHD1EK80X103
C754	CHIP CERAMIC F Z 0.1μF/16V or	CHD1CZ80F104
	CHIP CERAMIC F Z 0.1μF/25V or	CHD1EZ80F104
	CHIP CERAMIC F Z 0.1μF/25V or	CHD1EZ80Z104
	CHIP CERAMIC F Z 0.1μF/16V	CHD1CZ80Z104
C755	CHIP CERAMIC F Z 0.1μF/16V or	CHD1CZ80F104
	CHIP CERAMIC F Z 0.1μF/25V or	CHD1EZ80F104
	CHIP CERAMIC F Z 0.1μF/25V or	CHD1EZ80Z104
	CHIP CERAMIC F Z 0.1μF/16V	CHD1CZ80Z104
C756	CHIP TANTAL 15μF/6.3V M or	1223156C
	CHIP TANTAL 15μF/6.3V M	CA0K156KC003
C757	CHIP TANTAL 10μF/6.3V M or	1223106C
	CHIP TANTAL 10μF/6.3V M	CA0K106KC003
C758	CHIP CERAMIC B K 0.01μF/50V or	CHD1JK80B103
	CHIP CERAMIC B K 0.01μF/25V or	CHD1EK80B103

Ref.No.	Description	PartNo.
	CHIP CERAMIC B K 0.01μF/50V or	CHD1JK80X103
	CHIP CERAMIC B K 0.01μF/25V	CHD1EK80X103
C759	CHIP CERAMIC B K 0.1μF/50V or	12B3104C
	CHIP CERAMIC B K 0.1μF/25V	12B2104C
C760	CHIP CERAMIC 1μF/16V F 2125 or	CA1C010KC001
	CHIP CERAMIC 1μF/16V F 2125 or	CA1C010MR002
	CHIP CERAMIC 1μF/16V F 2125	CA1C010TU003
C761	CHIP CERAMIC 1μF/16V F 2125 or	CA1C010KC001
	CHIP CERAMIC 1μF/16V F 2125 or	CA1C010MR002
	CHIP CERAMIC 1μF/16V F 2125	CA1C010TU003
C763	CHIP CERAMIC B K 0.01μF/50V or	CHD1JK80B103
	CHIP CERAMIC B K 0.01μF/25V or	CHD1EK80B103
	CHIP CERAMIC B K 0.01μF/50V or	CHD1JK80X103
	CHIP CERAMIC B K 0.01μF/25V	CHD1EK80X103
C764	CHIP CERAMIC B K 0.1μF/50V or	12B3104C
	CHIP CERAMIC B K 0.1μF/25V	12B2104C
C765	CHIP CERAMIC F Z 0.1μF/16V or	CHD1CZ80F104
	CHIP CERAMIC F Z 0.1μF/25V or	CHD1EZ80F104
	CHIP CERAMIC F Z 0.1μF/25V or	CHD1EZ80Z104
	CHIP CERAMIC F Z 0.1μF/16V	CHD1CZ80Z104
C766	CHIP CERAMIC B K 1500PF/50V or	CHD1JK80B152
	CHIP CERAMIC B K 1500PF/25V or	CHD1EK80B152
	CHIP CERAMIC B K 1500PF/50V or	CHD1JK80X152
	CHIP CERAMIC B K 1500PF/25V	CHD1EK80X152
C767	CHIP TANTAL 15μF/6.3V M or	1223156C
	CHIP TANTAL 15μF/6.3V M	CA0K156KC003
C768	CHIP CERAMIC F Z 0.047μF/50V or	CHD1JZ80F473
	CHIP CERAMIC F Z 0.047μF/25V or	CHD1EZ80F473
	CHIP CERAMIC F Z 0.047μF/16V or	CHD1CZ80F473
	CHIP CERAMIC F Z 0.047μF/25V or	CHD1EZ80Z473
	CHIP CERAMIC F Z 0.047μF/16V	CHD1CZ80Z473
C769	CHIP CERAMIC B K 0.01μF/50V or	CHD1JK80B103
	CHIP CERAMIC B K 0.01μF/25V or	CHD1EK80B103
	CHIP CERAMIC B K 0.01μF/50V or	CHD1JK80X103
	CHIP CERAMIC B K 0.01μF/25V	CHD1EK80X103
C770	CHIP CERAMIC F Z 0.1μF/16V or	CHD1CZ80F104
	CHIP CERAMIC F Z 0.1μF/25V or	CHD1EZ80F104
	CHIP CERAMIC F Z 0.1μF/25V or	CHD1EZ80Z104
	CHIP CERAMIC F Z 0.1μF/16V	CHD1CZ80Z104
C771	CHIP CERAMIC B K 0.047μF/50V or	12B3473C
	CHIP CERAMIC B K 0.047μF/25V	12B2473C
C772	CHIP CERAMIC F Z 0.1μF/16V or	CHD1CZ80F104
	CHIP CERAMIC F Z 0.1μF/25V or	CHD1EZ80F104
	CHIP CERAMIC F Z 0.1μF/25V or	CHD1EZ80Z104
	CHIP CERAMIC F Z 0.1μF/16V	CHD1CZ80Z104
C773	CHIP TANTAL 1μF/16V M or	1225105C
	CHIP TANTAL 1μF/16V M	CA1C105KC003
C774	CHIP CERAMIC F Z 0.1μF/16V or	CHD1CZ80F104
	CHIP CERAMIC F Z 0.1μF/25V or	CHD1EZ80F104
	CHIP CERAMIC F Z 0.1μF/25V or	CHD1EZ80Z104
	CHIP CERAMIC F Z 0.1μF/16V	CHD1CZ80Z104
C775	CHIP CERAMIC B K 0.047μF/50V or	12B3473C
	CHIP CERAMIC B K 0.047μF/25V	12B2473C
C776	CHIP TANTAL 10μF/6.3V M or	1223106C
	CHIP TANTAL 10μF/6.3V M	CA0K106KC003
C777	CHIP CERAMIC F Z 0.1μF/16V or	CHD1CZ80F104
	CHIP CERAMIC F Z 0.1μF/25V or	CHD1EZ80F104
	CHIP CERAMIC F Z 0.1μF/25V or	CHD1EZ80Z104
	CHIP CERAMIC F Z 0.1μF/16V	CHD1CZ80Z104
C778	CHIP CERAMIC B K 0.01μF/50V or	CHD1JK80B103

Ref.No.	Description	PartNo.
	CHIP CERAMIC B K 0.01μF/25V or	CHD1EK80B103
	CHIP CERAMIC B K 0.01μF/50V or	CHD1JK80X103
	CHIP CERAMIC B K 0.01μF/25V	CHD1EK80X103
C779	CHIP CERAMIC B K 0.047μF/50V or	12B3473C
	CHIP CERAMIC B K 0.047μF/25V	12B2473C
C780	CHIP CERAMIC B K 0.01μF/50V or	CHD1JK80B103
	CHIP CERAMIC B K 0.01μF/25V or	CHD1EK80B103
	CHIP CERAMIC B K 0.01μF/50V or	CHD1JK80X103
	CHIP CERAMIC B K 0.01μF/25V	CHD1EK80X103
C781	CHIP CERAMIC SL J 47PF/50V	CHD1JJ8SL470
C782	CHIP CERAMIC F Z 0.01μF/50V or	CHD1JZ80F103
	CHIP CERAMIC F Z 0.01μF/25V or	CHD1EZ80F103
	CHIP CERAMIC F Z 0.01μF/50V or	CHD1JZ80Z103
	CHIP CERAMIC F Z 0.01μF/25V	CHD1EZ80Z103
C783	CHIP CERAMIC B K 1000PF/50V or	CHD1JK80B102
	CHIP CERAMIC B K 1000PF/25V or	CHD1EK80B102
	CHIP CERAMIC B K 1000PF/50V or	CHD1JK80X102
	CHIP CERAMIC B K 1000PF/25V	CHD1EK80X102
C784	CHIP CERAMIC B K 1000PF/50V or	CHD1JK80B102
	CHIP CERAMIC B K 1000PF/25V or	CHD1EK80B102
	CHIP CERAMIC B K 1000PF/50V or	CHD1JK80X102
	CHIP CERAMIC B K 1000PF/25V	CHD1EK80X102
C785	CHIP CERAMIC SL J 100PF/50V	CHD1JJ8SL101
C786	CHIP CERAMIC SL J 100PF/50V	CHD1JJ8SL101
C787	CHIP CERAMIC SL J 150PF/50V	CHD1JJ8SL151
C788	CHIP CERAMIC SL J 100PF/50V	CHD1JJ8SL101
	CONNECTORS	
CL-18	CONNECTOR(B TO B) 8P REC 3-175637-8	JC37T08APH0C
CL-19	CONNECTOR(B TO B)12P REC 4-175639-2	JC39T12APH0C
CN-6	CONNECTOR(B TO B)12P POST4-176833-2	JC33A12APH0C
CN-7	CONNECTOR(B TO B)18P POST4-176833-8	JC33A18APH0C
CN-8	CONNECTOR(B TO B)18P POST4-176833-8	JC33A18APH0C
CN-9	CONNECTOR(B TO B)12P POST4-176833-2	JC33A12APH0C
CN-13	CONNECTOR IL-Z-06PL-SMTY	JCILD06NBH0C
CN-15	FPC CONNECTOR, 8P IL-402- 8S-S1L-SA	JC42T08NBH0B
CN-16	FPC CONNECTOR, 14P IL-402-14S-S1L-SA	JC42T14NBH0B
CN-17	FPC CONNECTOR, 12P IL-402-12S-S1L-SA	JC42T12NBH0B
	DIODES	
D574	CHIP DIODE DA115	ADA115T106**
D601	CHIP DIODE DA204U	ADA204UT106*
D603	CHIP DIODE DAN202U	ADAN202UT106
D701	CHIP DIODE DA115	ADA115T106**
	ICS	
IC571	IC S-8420BF-T1	GS8420BFT100
IC574	IC TA7291F	GTA7291FER**
IC575	IC UPC358G2(T1) or	GUPC358G2T1*
	IC BA10358F-T1 or	GBA10358FT1*
	IC NJM2904M(T1)	GNJM2904MT1*
IC576	IC BU4066BF(T1) or	GBU4066BFT1*
	IC NJU4066BMT1	GNJU4066BMT1
IC601	MICRO CONTROLLER 4BIT UPD75512GF	GC91000NE044
IC602	IC BU4094BFT1	GBU4094BFT1*
IC603	IC TC4024BF(TP1)	GTC4024BFTP1
IC604	IC BU74HC08FT1 or	GBU74HC08FT1
	IC NJU74HC08MT1	GJU74HC08MT1
IC605	IC BU4052BF or	14DF547
	IC NJU4052BM (T1)	14D0573
IC606	IC CX20035-T1	GCX20035T1**
IC701	IC CXA1204Q	GCXA1204Q***
IC702	IC UPC358G2(T1) or	GUPC358G2T1*

Ref.No.	Description	PartNo.
	IC BA10358F-T1 or	GBA10358FT1*
	IC NJM2904M(T1)	GNJM2904MT1*
IC703	HEAD AMP IC CXA1201R-T3	GCXA1202RT30
	COILS	
L601	INDUCTOR 22UH J or	1170974T
	LEAD INDUCTOR 22UH J	LLAXJBVFS220
L602	INDUCTOR 33UH J or	1170976T
	LEAD INDUCTOR 33UH J	LLAXJBVFS330
L603	INDUCTOR 33UH J or	1170976T
	LEAD INDUCTOR 33UH J	LLAXJBVFS330
L701	INDUCTOR 330UH J or	1170988T
	LEAD INDUCTOR 330UH J	LLAXJBVFS331
L702	CHIP INDUCTOR 220UH K or	LLACKG0TE221
	LEEDLESS INDUCTOR 220UH J or	1170843
	CHIP INDUCTOR 220UH K	1170911
L703	CHIP INDUCTOR 10UH J or	1170810
	CHIP INDUCTOR 10UH K	1170861
L704	CHIP INDUCTOR 100UH J or	1170742
	CHIP INDUCTOR 100UH J or	1170756
	CHIP INDUCTOR 100UH J 3225	LLACJE8FS101
L705	CHIP INDUCTOR 150UH J or	1170792
	CHIP INDUCTOR 150UH J or	1170789
	CHIP INDUCTOR 150UH J 3225	LLACJE8FS151
L706	CHIP INDUCTOR 150UH J or	1170792
	CHIP INDUCTOR 150UH J or	1170789
	CHIP INDUCTOR 150UH J 3225	LLACJE8FS151
	TRANSISTORS	
Q574	CHIP 2SC4081(R) or	QSC4081T106R
	CHIP 2SC4081(S)	QSC4081T106S
Q601	CHIP 2SA1576(R) or	QSA1576T106R
	CHIP 2SA1576(S)	QSA1576T106S
Q602	CHIP 2SC4081(R) or	QSC4081T106R
	CHIP 2SC4081(S)	QSC4081T106S
Q603	CHIP 2SA1576(R) or	QSA1576T106R
	CHIP 2SA1576(S)	QSA1576T106S
Q604	CHIP 2SA1576(R) or	QSA1576T106R
	CHIP 2SA1576(S)	QSA1576T106S
Q605	CHIP 2SC4081(R) or	QSC4081T106R
	CHIP 2SC4081(S)	QSC4081T106S
Q606	CHIP 2SC4081(R) or	QSC4081T106R
	CHIP 2SC4081(S)	QSC4081T106S
Q607	CHIP FET 2SK303 V3	Q2SK3033TB00
Q608	CHIP 2SC4081(R) or	QSC4081T106R
	CHIP 2SC4081(S)	QSC4081T106S
Q701	CHIP 2SC4081(R) or	QSC4081T106R
	CHIP 2SC4081(S)	QSC4081T106S
Q702	CHIP 2SC4081(R) or	QSC4081T106R
	CHIP 2SC4081(S)	QSC4081T106S
Q703	CHIP 2SA1576(R) or	QSA1576T106R
	CHIP 2SA1576(S)	QSA1576T106S
Q704	CHIP 2SC4081(R) or	QSC4081T106R
	CHIP 2SC4081(S)	QSC4081T106S
Q705	CHIP 2SA1576(R) or	QSA1576T106R
	CHIP 2SA1576(S)	QSA1576T106S
Q706	CHIP 2SA1576(R) or	QSA1576T106R
	CHIP 2SA1576(S)	QSA1576T106S
Q707	CHIP 2SC4081(R) or	QSC4081T106R
	CHIP 2SC4081(S)	QSC4081T106S
Q751	CHIP 2SA1577(Q) or	QSA1577T106Q
	CHIP 2SA1577(R)	QSA1577T106R

Ref.No.	Description	PartNo.
Q752	CHIP 2SA1577(Q) or	QSA1577T106Q
	CHIP 2SA1577(R)	QSA1577T106R
Q753	CHIP 2SC4081(R) or	QSC4081T106R
	CHIP 2SC4081(S)	QSC4081T106S
QR601	CHIP DTA144EU	QTA144EUT106
QR602	CHIP DTC144EU	QTC144EUT106
QR604	CHIP DTA114EU	QTA114EUT106
QR701	CHIP DTC114EU	QTC114EUT106
QR702	CHIP DTC144EU	QTC144EUT106
QR703	CHIP DTC144EU	QTC144EUT106
QR751	CHIP DTC144EU	QTC144EUT106
QR752	CHIP DTA144EU	QTA144EUT106
	RESISTORS	
R571	CHIP 1/16W J 1KΩ	RCXGJR8Z0102
R572	CHIP 1/16W J 47KΩ	RCXGJR8Z0473
R573	CHIP 1/16W J 220KΩ	RCXGJR8Z0224
R574	CHIP 1/16W J 0Ω	RCXGJR8Z0000
R577	CHIP 1/16W J 47KΩ	RCXGJR8Z0473
R578	CHIP 1/16W J 10KΩ	RCXGJR8Z0103
R580	CHIP 1/16W J 1KΩ	RCXGJR8Z0102
R581	CHIP 1/16W J 10KΩ	RCXGJR8Z0103
R583	CHIP 1/16W J 6.8KΩ	RCXGJR8Z0682
R584	CHIP 1/16W J 6.8KΩ	RCXGJR8Z0682
R586	CHIP 1/16W J 330KΩ	RCXGJR8Z0334
R587	CHIP 1/16W J 10KΩ	RCXGJR8Z0103
R591	CHIP 1/16W J 100KΩ	RCXGJR8Z0104
R592	CHIP 1/16W J 100KΩ	RCXGJR8Z0104
R593	CHIP 1/16W J 68KΩ	RCXGJR8Z0683
R594	CHIP 1/16W J 33KΩ	RCXGJR8Z0333
R595	CHIP 1/16W J 82KΩ	RCXGJR8Z0823
R596	CHIP 1/16W J 22KΩ	RCXGJR8Z0223
R601	CHIP 1/16W J 47KΩ	RCXGJR8Z0473
R602	CHIP 1/16W J 47KΩ	RCXGJR8Z0473
R603	CHIP 1/16W J 47KΩ	RCXGJR8Z0473
R604	CHIP 1/16W J 47KΩ	RCXGJR8Z0473
R605	CHIP 1/16W J 47KΩ	RCXGJR8Z0473
R606	CHIP 1/16W J 47KΩ	RCXGJR8Z0473
R607	CHIP 1/16W J 10KΩ	RCXGJR8Z0103
R608	CHIP 1/16W J 10KΩ	RCXGJR8Z0103
R609	CHIP 1/16W J 10KΩ	RCXGJR8Z0103
R610	CHIP 1/16W J 10KΩ	RCXGJR8Z0103
R611	CHIP 1/16W J 10KΩ	RCXGJR8Z0103
R612	CHIP 1/16W J 10KΩ	RCXGJR8Z0103
R613	CHIP 1/16W J 220KΩ	RCXGJR8Z0224
R614	CHIP 1/16W J 220KΩ	RCXGJR8Z0224
R615	CHIP 1/16W J 10KΩ	RCXGJR8Z0103
R616	CHIP 1/16W J 10KΩ	RCXGJR8Z0103
R617	CHIP 1/16W J 10KΩ	RCXGJR8Z0103
R618	CHIP 1/16W J 1KΩ	RCXGJR8Z0102
R619	CHIP 1/16W J 1KΩ	RCXGJR8Z0102
R620	CHIP 1/16W J 22KΩ	RCXGJR8Z0223
R621	CHIP 1/16W J 22KΩ	RCXGJR8Z0223
R622	CHIP 1/16W J 22KΩ	RCXGJR8Z0223
R623	CHIP 1/16W J 10KΩ	RCXGJR8Z0103
R624	CHIP 1/16W J 10KΩ	RCXGJR8Z0103
R625	CHIP 1/16W J 10KΩ	RCXGJR8Z0103
R626	CHIP 1/16W J 10KΩ	RCXGJR8Z0103
R627	CHIP 1/16W J 10KΩ	RCXGJR8Z0103
R628	CHIP 1/16W J 10KΩ	RCXGJR8Z0103
R629	CHIP 1/16W J 10KΩ	RCXGJR8Z0103

Ref.No.	Description	PartNo.
R630	CHIP 1/16W J 10KΩ	RCXGJR8Z0103
R631	CHIP 1/16W J 47KΩ	RCXGJR8Z0473
R632	CHIP 1/16W J 47KΩ	RCXGJR8Z0473
R633	CHIP 1/16W J 220KΩ	RCXGJR8Z0224
R634	CHIP 1/16W J 39KΩ	RCXGJR8Z0393
R635	CHIP 1/16W J 47KΩ	RCXGJR8Z0473
R636	CHIP 1/16W J 10KΩ	RCXGJR8Z0103
R637	CHIP 1/16W J 10KΩ	RCXGJR8Z0103
R638	CHIP 1/16W J 10KΩ	RCXGJR8Z0103
R639	CHIP 1/16W J 10KΩ	RCXGJR8Z0103
R640	CHIP 1/16W J 47KΩ	RCXGJR8Z0473
R641	CHIP 1/16W J 47KΩ	RCXGJR8Z0473
R642	CHIP 1/16W J 100KΩ	RCXGJR8Z0104
R643	CHIP 1/16W J 100KΩ	RCXGJR8Z0104
R644	CHIP 1/16W J 47KΩ	RCXGJR8Z0473
R645	CHIP 1/16W J 10KΩ	RCXGJR8Z0103
R646	CHIP 1/16W J 47KΩ	RCXGJR8Z0473
R647	CHIP 1/16W J 47KΩ	RCXGJR8Z0473
R648	CHIP 1/16W J 47KΩ	RCXGJR8Z0473
R649	CHIP 1/16W J 10KΩ	RCXGJR8Z0103
R650	CHIP 1/16W J 330KΩ	RCXGJR8Z0334
R651	CHIP 1/16W J 10KΩ	RCXGJR8Z0103
R652	CHIP 1/16W J 47KΩ	RCXGJR8Z0473
R653	CHIP 1/16W J 1KΩ	RCXGJR8Z0102
R654	CHIP 1/16W J 47KΩ	RCXGJR8Z0473
R655	CHIP 1/16W J 1KΩ	RCXGJR8Z0102
R656	CHIP 1/16W J 10KΩ	RCXGJR8Z0103
R657	CHIP 1/16W J 47KΩ	RCXGJR8Z0473
R658	CHIP 1/16W J 10KΩ	RCXGJR8Z0103
R659	CHIP 1/16W J 47KΩ	RCXGJR8Z0473
R660	CHIP 1/16W J 10KΩ	RCXGJR8Z0103
R661	CHIP 1/16W J 100KΩ	RCXGJR8Z0104
R662	CHIP 1/16W J 10KΩ	RCXGJR8Z0103
R663	CHIP 1/16W J 15KΩ	RCXGJR8Z0153
R664	CHIP 1/16W J 10KΩ	RCXGJR8Z0103
R665	CHIP 1/16W J 220KΩ	RCXGJR8Z0224
R666	CHIP 1/16W J 100KΩ	RCXGJR8Z0104
R669	CHIP 1/16W J 47KΩ	RCXGJR8Z0473
R670	CHIP 1/16W J 10KΩ	RCXGJR8Z0103
R671	CHIP 1/16W J 33KΩ	RCXGJR8Z0333
R672	CHIP 1/16W J 47KΩ	RCXGJR8Z0473
R673	CHIP 1/16W J 0Ω	RCXGJR8Z0000
R674	CHIP 1/16W J 10KΩ	RCXGJR8Z0103
R675	CHIP 1/16W J 82KΩ	RCXGJR8Z0823
R676	CHIP 1/16W J 3.3KΩ	RCXGJR8Z0332
R677	CHIP 1/16W J 10KΩ	RCXGJR8Z0103
R678	CHIP 1/16W J 18KΩ	RCXGJR8Z0183
R679	CHIP 1/16W J 47KΩ	RCXGJR8Z0473
R680	CHIP 1/16W J 56KΩ	RCXGJR8Z0563
R681	CHIP 1/16W J 3.3KΩ	RCXGJR8Z0332
R682	CHIP 1/16W J 27KΩ	RCXGJR8Z0273
R683	CHIP 1/16W J 56KΩ	RCXGJR8Z0563
R684	CHIP 1/16W J 180KΩ	RCXGJR8Z0184
R685	CHIP 1/16W J 3.3KΩ	RCXGJR8Z0332
R686	CHIP 1/16W J 120KΩ	RCXGJR8Z0124
R687	CHIP 1/16W J 56KΩ	RCXGJR8Z0563
R688	CHIP 1/16W J 18KΩ	RCXGJR8Z0183
R689	CHIP 1/16W J 180KΩ	RCXGJR8Z0184
R690	CHIP 1/16W J 27KΩ	RCXGJR8Z0273
R691	CHIP 1/16W J 2.2KΩ	RCXGJR8Z0222

Ref.No.	Description	PartNo.
R692	CHIP 1/16W J 1.8KΩ	RCXGJR8Z0182
R693	CHIP 1/16W J 3.3KΩ	RCXGJR8Z0332
R694	CHIP 1/16W J 3.3KΩ	RCXGJR8Z0332
R695	CHIP 1/16W J 27KΩ	RCXGJR8Z0273
R696	CHIP 1/16W J 150KΩ	RCXGJR8Z0154
R697	CHIP 1/16W J 3.3KΩ	RCXGJR8Z0332
R701	CHIP 1/16W J 47KΩ	RCXGJR8Z0473
R702	CHIP 1/16W J 10KΩ	RCXGJR8Z0103
R703	CHIP 1/16W J 10KΩ	RCXGJR8Z0103
R704	CHIP 1/16W J 100Ω	RCXGJR8Z0101
R705	CHIP 1/16W J 150KΩ	RCXGJR8Z0154
R706	CHIP 1/16W J 47KΩ	RCXGJR8Z0473
R707	CHIP 1/16W J 47KΩ	RCXGJR8Z0473
R708	CHIP 1/16W J 10KΩ	RCXGJR8Z0103
R709	CHIP 1/16W J 10KΩ	RCXGJR8Z0103
R710	CHIP 1/16W J 2.7KΩ	RCXGJR8Z0272
R711	CHIP 1/16W J 1.8KΩ	RCXGJR8Z0182
R712	CHIP 1/16W J 2.7KΩ	RCXGJR8Z0272
R713	CHIP 1/16W J 1KΩ	RCXGJR8Z0102
R714	CHIP 1/16W J 33KΩ	RCXGJR8Z0333
R715	CHIP 1/16W J 1MΩ	RCXGJR8Z0105
R716	CHIP 1/16W J 150Ω	RCXGJR8Z0151
R717	CHIP 1/16W J 150Ω	RCXGJR8Z0151
R718	CHIP 1/16W J 33KΩ	RCXGJR8Z0333
R719	CHIP 1/16W J 10KΩ	RCXGJR8Z0103
R720	CHIP 1/16W J 33KΩ	RCXGJR8Z0333
R721	CHIP 1/16W J 22KΩ	RCXGJR8Z0223
R722	CHIP 1/16W J 560Ω	RCXGJR8Z0561
R723	CHIP 1/16W J 120Ω	RCXGJR8Z0121
R724	CHIP 1/16W J 180Ω	RCXGJR8Z0181
R725	CHIP 1/16W J 4.7KΩ	RCXGJR8Z0472
R726	CHIP 1/16W J 22KΩ	RCXGJR8Z0223
R727	CHIP 1/16W J 3.3KΩ	RCXGJR8Z0332
R729	CHIP 1/16W J 22KΩ	RCXGJR8Z0223
R730	CHIP 1/16W J 3.3KΩ	RCXGJR8Z0332
R731	CHIP 1/16W J 3.3KΩ	RCXGJR8Z0332
R732	CHIP 1/16W J 56KΩ	RCXGJR8Z0563
R733	CHIP 1/16W J 6.8KΩ	RCXGJR8Z0682
R734	CHIP 1/16W J 8.2KΩ	RCXGJR8Z0822
R735	CHIP 1/16W J 680KΩ	RCXGJR8Z0684
R736	CHIP 1/16W J 10KΩ	RCXGJR8Z0103
R737	CHIP 1/16W J 470Ω	RCXGJR8Z0471
R738	CHIP 1/16W J 470Ω	RCXGJR8Z0471
R739	CHIP 1/16W J 10KΩ	RCXGJR8Z0103
R740	CHIP 1/16W J 10KΩ	RCXGJR8Z0103
R741	CHIP 1/16W J 10KΩ	RCXGJR8Z0103
R742	CHIP 1/16W J 1.2KΩ	RCXGJR8Z0122
R743	CHIP 1/16W J 1MΩ	RCXGJR8Z0105
R744	CHIP 1/16W J 22KΩ	RCXGJR8Z0223
R745	CHIP 1/16W J 3.9KΩ	RCXGJR8Z0392
R746	CHIP 1/16W J 39KΩ	RCXGJR8Z0393
R747	CHIP 1/16W J 22KΩ	RCXGJR8Z0223
R748	CHIP 1/16W J 10KΩ	RCXGJR8Z0103
R751	CHIP 1/16W J 10KΩ	RCXGJR8Z0103
R752	CHIP 1/16W J 150KΩ	RCXGJR8Z0154
R753	CHIP 1/16W J 150KΩ	RCXGJR8Z0154
R754	CHIP 1/16W J 56KΩ	RCXGJR8Z0563
R755	CHIP 1/16W J 2.2KΩ	RCXGJR8Z0222
R756	CHIP 1/16W J 3.9KΩ	RCXGJR8Z0392
R757	CHIP 1/16W J 1KΩ	RCXGJR8Z0102

Ref.No.	Description	PartNo.
R758	CHIP 1/16W J 1KΩ	RCXGJR8Z0102
R759	CHIP 1/16W J 8.2KΩ	RCXGJR8Z0822
R760	CHIP 1/16W J 47KΩ	RCXGJR8Z0473
R761	CHIP 1/16W J 22KΩ	RCXGJR8Z0223
R762	CHIP 1/16W J 1.5KΩ	RCXGJR8Z0152
R763	CHIP 1/16W J 27KΩ	RCXGJR8Z0273
R764	CHIP 1/16W J 27KΩ	RCXGJR8Z0273
R765	CHIP 1/16W J 27KΩ	RCXGJR8Z0273
R766	CHIP 1/16W J 10Ω	RCXGJR8Z0100
R767	CHIP 1/16W J 10Ω	RCXGJR8Z0100
R768	CHIP 1/16W J 27KΩ	RCXGJR8Z0273
R769	CHIP 1/16W J 27KΩ	RCXGJR8Z0273
R770	CHIP 1/16W J 27KΩ	RCXGJR8Z0273
R771	CHIP 1/16W J 1.5KΩ	RCXGJR8Z0152
R772	CHIP 1/16W J 22KΩ	RCXGJR8Z0223
R773	CHIP 1/16W J 47KΩ	RCXGJR8Z0473
R774	CHIP 1/16W J 8.2KΩ	RCXGJR8Z0822
R775	CHIP 1/16W J 47KΩ	RCXGJR8Z0473
R776	CHIP 1/16W J 22KΩ	RCXGJR8Z0223
R777	CHIP 1/16W J 2.2KΩ	RCXGJR8Z0222
R778	CHIP 1/16W J 22KΩ	RCXGJR8Z0223
R779	CHIP 1/16W J 22KΩ	RCXGJR8Z0223
R780	CHIP 1/16W J 27KΩ	RCXGJR8Z0273
R781	CHIP 1/16W J 39KΩ	RCXGJR8Z0393
R782	CHIP 1/16W J 330Ω	RCXGJR8Z0331
R783	CHIP 1/16W J 22Ω	RCXGJR8Z0220
R784	CHIP 1/16W J 470Ω	RCXGJR8Z0471
R785	CHIP 1/16W J 2.2KΩ	RCXGJR8Z0222
R786	CHIP 1/16W J 2.2KΩ	RCXGJR8Z0222
R789	CHIP 1/10W J 0Ω	134F000C
R798	CHIP 1/16W J 0Ω	RCXGJR8Z0000
	MISCELLANEOUS	
TP601	CHECKER CHIP RCU00000C	XU0C000AL001
TP708	CHECKER CHIP RCU00000C	XU0C000AL001
TP709	CHECKER CHIP RCU00000C	XU0C000AL001
TP710	CHECKER CHIP RCU00000C	XU0C000AL001
X601	X'TAL 32KHZ (10PPM)	1811351
X602	CERALOCK 4.19MHZ or	1812885
	CERAMIC RESONATOR KBR	1813682
X603	X'TAL KD8482FCB 4.433619 MHZ	FX0445SDS002
X701	X'TAL 5.859375MHZ or	FXK585LDS002
	X'TAL 5.85938 MHZ	FX0585LFS002
⚠	P.C.B.	BC1580G02002

PSV PCB ASSEMBLY

Ref.No.	Description	PartNo.
	PSV PCB ASS'Y	0VSA04008
	CONSISTS OF THE FOLLOWING:	
	DIODES	
D849	DIODE 1SR35-100A	35100AT
D850	DIODE 1SS254	A1SS254T77**
D851	DIODE 1SS254	A1SS254T77**
D852	DIODE 1SS254	A1SS254T77**
	MISCELLANEOUS	
F850⚠	FUSE S506-3.15A-COLOR	1790486
JK850	DC JACK STJ-06	JYDJEE0SR001
SW848	PUSH SWITCH SKEGLC	SST0101AL009
SW849	PUSH SWITCH SKEGLC	SST0101AL009
SW850	PUSH SWITCH SKEGLA	SST0101AL004

Ref.No.	Description	PartNo.
W1	CONNECTOR ASS'Y 10P	WX1C1580-001
	TERMINAL	0VM402681
	TERMINAL	0VM402682
	TERMINAL; BAT	0VM402683
⚠	P.C.B.	BC1580F01001
⚠	FUSE HOLDER PFC5000-0202	XH01Z00SR001

CHASSIS ELECTRICAL PARTS

Ref.No.	Description	PartNo.
FFC 7	FFC WIRE 10P FFC 7:CAMERA AF	WX3910SZ4404
IC 04	IC LZ2323A9	GLZ2323A9000
	O.L.P.F. 0G-BF167 or	FCL999NDS002
	O.L.P.F. SV-511B	FCL999NKL001

SCHEMATIC DIAGRAM

STANDARD NOTES

SCHEMATIC DIAGRAMS

Warning

Many electrical and mechanical parts marked with ⚠ in this chassis have special characteristics. These characteristics often pass unnoticed and the protection afforded by them cannot necessarily be obtained by using replacement components rated for higher voltage, wattage, etc. Replacement parts that have these special safety characteristics are identified in this manual and its supplements; electrical components having such features are identified by the mark shown below in the schematic diagram and the parts list. Before replacing any of these components, read the parts list in this manual carefully. The use of substitute replacement parts that do not have the same safety characteristics as specified in the parts list may create shock, fire, or other hazards.

Notes :

① Do not use the part number shown on these drawings for ordering. The correct part number is shown in the parts list, and may be slightly different or amended since these drawings were prepared.
② All resistance values are indicated in ohms ($K=10^3$, $M=10^6$).
③ Resistor wattages are 1/5W or 1/6W unless otherwise specified.
④ All capacitance values are indicated in μF ($P=10^{-6}$μF).
⑤ All voltages are DC voltages unless otherwise specified.
⑥ Voltage Indications for PB, STOP and REC mode on Schematic are as shown below.

Capacitor Temperature Markings

Mark	Capacity change rate	Standard temperature	Temperature Range
(B)	±10%	20°C	-25~+85°C
(F)	+30-80%	20°C	-25~+85°C
(SR)	±15%	20°C	-25~+85°C
(Z)	+30-80%	20°C	-10~+70°C

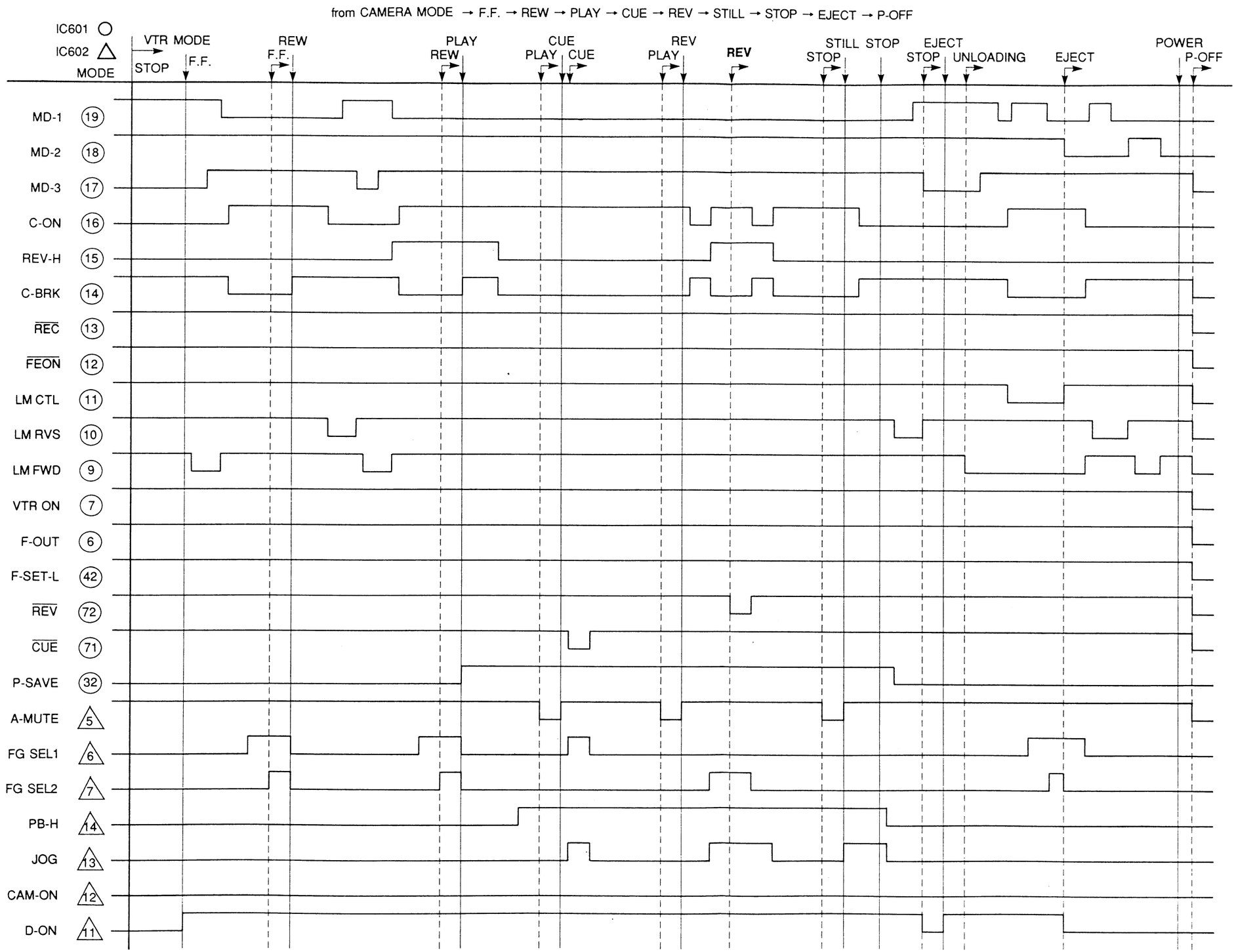
from CAMERA MODE → F.F. → REW → PLAY → CUE → REV → STILL → STOP → EJECT → P-OFF
IC601 ○
IC602 △
MODE
VTR MODE
STOP
F.F.
REW
F.F.
PLAY
REW
CUE
PLAY
CUE
REV
PLAY
REV
STILL
STOP
STOP
EJECT
STOP
UNLOADING
EJECT
POWER
P-OFF
MD-1 19
MD-2 18
MD-3 17
C-ON 16
REV-H 15
C-BRK 14
REC 13
FEON 12
LM CTL 11
LM RVS 10
LM FWD 9
VTR ON 7
F-OUT 6
F-SET-L 42
REV 72
CUE 71
P-SAVE 32
A-MUTE 5
FG SEL1 6
FG SEL2 7
PB-H 14
JOG 13
CAM-ON 12
D-ON 11

LEAD IDENTIFICATIONS

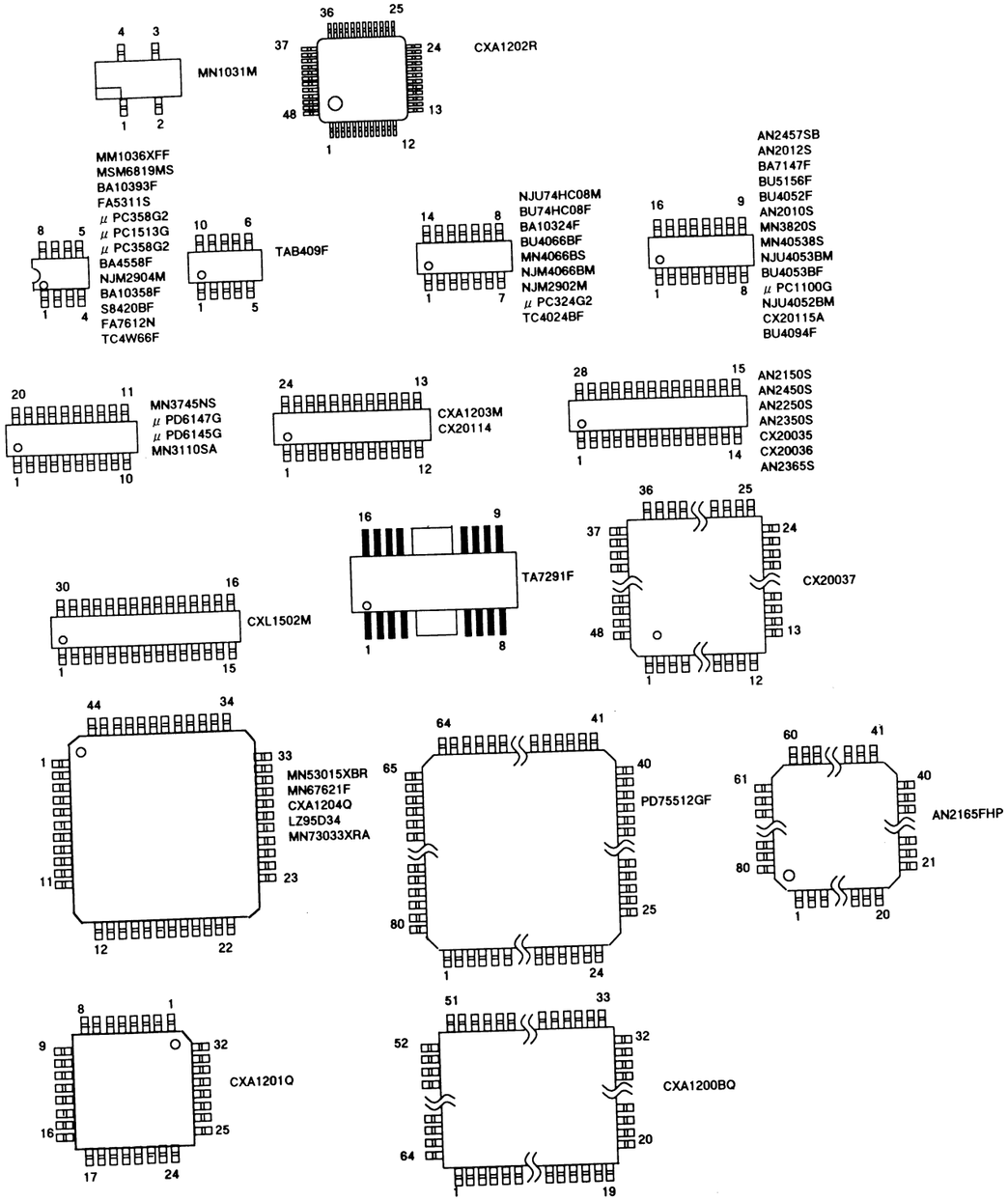

CHIP IDENTIFICATIONS

2SC4398	EY 1.25 * 2.0	
2SC4397	CY 1.25 * 2.0	22K 22K
2SA1745	ES * * = 5,6,7	
2SA1678	EL 1.25 * 2.0	
2SC4396	BY 1.25 * 2.0	

DTA114EU	14	10K 10K
DTC114EU	24	10K 10K
DTC144TU	06	47K
FC106	901 1.6 * 2.9	47K 47K 47K 47K
2SK303	V:3 1.5 * 2.9	
TC4S30F or SC14S70F	C8	Vdd Vss
2SA1213	NY 2.5 * 4.5	
1SS283	1.6 * 2.65	

SAH-02	H02 4.7∗6.8	
SB007-03CP	G 1.5∗2.9	NC
MA141K	MH 1.25∗2.0	NC
ISV202	5 1.6∗2.65	
2SB1386	BH ∗Q ∗=P,Q	
2SB1073	— 2.5∗4.5	
2SC3929	S 1.25∗2.0	
2SK621	30 1.5∗2.9	R1 R2 R1/R2=1/50 R1+R2=100K~200K

2SD1767	DC ∗Q ∗=Q, R	
2SA1037	FR 1.6∗2.9	
UN5212	8B 1.25∗2.0	22K 22K
UN5112	6B 1.25∗2.0	22K 22K
2SA1622	M∗ ∗=6,7	
2SC4211	L∗ ∗=6,7	
2SA1676	BL 1.25∗2.0	47K 47K
2SA1677	CL 1.25∗2.0	22K 22K

2SC4081	BR 1.25∗2.0	
DA115	AU 1.25∗2.0	NC
DA204U	K 1.25∗2.0	
DTA144EU	16 1.25∗2.0	47K 47K
DTC144EU	26 1.25∗2.0	47K 47K
2SC4098	A∗ ∗=P,Q,N	
DAN202U	N	
DTC124EU	25	22K 22K

MA159	M1A 1.6∗2.9	
MA141WK	MT 1.25∗2.0	
2SK209	∗=Y,G,L ∗ ∗ 1.6∗2.9	
DAP202U	P 1.25∗2.0	
2SA1576	FR 1.25∗2.0	
2SA1577	HP 1.25∗2.0	
2SK1332	V∗ 1.25∗2.0	
MA720	M2W 1.6∗2.9	NC

MA160	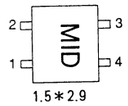	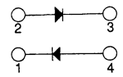
2SK94	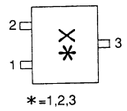	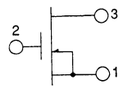
DTA124EU	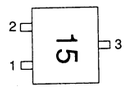	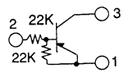
DTA114YU	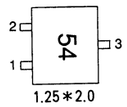	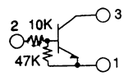
RD*.*M	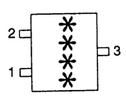	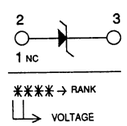
IMH2	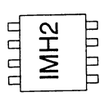	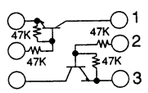

IC PIN FUNCTION DESCRIPTION

System Control(IC601)GC1000NE044

Pin No	IN/OUT	Signal Name	Function
1	IN	B-CHK	Battery Check
2	IN	AD-REF	Reference Voltage AD Conv. IN
3	—	VDD	VDD (+5V)
4	—	VDD	VDD (+5V)
5	OUT	REF	Reference Voltage
6	OUT	F-OUT	Fade out (PWM out)
7	OUT	VTR-ON	VTR Power on at "H"
8	OUT	EXP-OE	Port Expander Output at "H"
9	OUT	LM-FWD	Loading Motor Foward at "H"
10	OUT	LM-RVS	Loading Motor Reverse at "H"
11	OUT	LM-CTL	Loading Motor Power up at "H"
12	OUT	$\overline{\text{FE-ON}}$	Flying Erase head on at "L"
13	OUT	$\overline{\text{REC}}$	REC at "L"
14	OUT	C-BRK	Capstan Motor Brake at "H"
15	OUT	REV-H	Capstan Motor Reverse at "H"
16	OUT	C-ON	Capstan Motor on at "H"
17	IN	MD-3	Mode Switch Detector 3
18	IN	MD-2	Mode Switch Detector 2
19	IN	MD-1	Mode Switch Detector 1
20	IN	No USE	Always GND
21	IN	B-SELECT	Back up Battery at "L"
22	—	VDD	VDD (+5V)
23	IN	$\overline{\text{EJECT}}$	EJECT at "L"
24	IN	$\overline{\text{POWER}}$	Power ON/OFF at "L"
25	IN	DATA3	Key Scan Data 3
26	IN	DATA2	Key Scan Data 2
27	IN	DATA1	Key Scan Data 1
28	IN	DATA0	Key Scan Data 0
29	OUT	P-SAVE L	Power Save Mode at "L"
30	OUT	SCAN2	Key Scan Pulse 2
31	OUT	SCAN1	Key Scan Pulse 1
32	OUT	SCAN0	Key Scan Pulse 0
33	—	GND	GND
34	OUT	$\overline{\text{CAM LED}}$	Camera LED on at "L"
35	OUT	$\overline{\text{VTR LED}}$	VTR LED on at "L"
36	OUT	$\overline{\text{TALLYLED}}$	Tally LED on at "L"
37	OUT	$\overline{\text{SRV-CS}}$	Servo Chip Select at "L"
38	OUT	ATF TSA	ATF TSA Pulse
39	OUT	ATF SWP	ATF Switching Pulse
40	OUT	ATF SEL 1	ATF Select 1
41	OUT	ATF SEL 2	ATF Select 2
42	OUT	F SET-H	Fade Set at "H"

Pin No	IN/OUT	Signal Name	Function
43	OUT	SRV-STB	Servo Power on at "H"
44	OUT	EXP-STB	Port Expander Output END at "H"
45	OUT	CG-STB	Character Generator Data Control
46	IN	C-FG	Capstan FG Pulse
47	IN	EH-SYNC	H Sync Pulse
48	IN	CASS IN	Cassette Holder Down at "L"
49	IN	RF SW	Head Switch Pulse
50	IN	DATA5	Serial Date (IN)
51	OUT	DATA6	Serial Date (OUT)
52	OUT	SCK	Serial Clock
53	IN	ATF LOCK	ATF Lock Pulse
54	—	GND	GND
55	—	XT1	Sub System Clock (32.768kHZ)
56	—	XT2	Sub System Clock (32.768kHZ)
57	—	GND	GND
58	—	X1	System Clock (4.19MHZ)
59	—	X2	System Clock (4.19MHZ)
60	IN	RESET	System Reset at "L"
61	—	NTSC/PAL	PAL at "L"
62	IN	TRIGGER	REC Start , Stop at "L"
63	IN	LINE IN	LINE IN Port Active at "L"
64	IN	FADE ON/OFF	Fade ON , OFF at "L"
65	IN	S-REEL	Supply Reel Sensor Pulse
66	IN	T-REEL	Take up Reel Sensor Pulse
67	IN	S-SENS	Start, Sens at "L"
68	IN	E-SENS	End, Sens at "L"
69	OUT	S/E LED	Start, End LED on at "L"
70	OUT	V-CS	Video IC Select at "L"
71	OUT	CUE	Cue at "L"
72	OUT	REV	Review at "L"
73	—	GND	GND
74	IN	ME	ME Tape at "L"
75	IN	REC SAFETY	Rec Safety Switch on at "H"
76	IN	1/1000 H	1/1000 Shatter Switch on at "H"
77	IN	LLA	Low Light Alarm Control at "H"
78	IN	CLOG	CLOG at "H"
79	IN	PB SP/LP	SP at "H" Under Cue,Review Mode
80	IN	DEW	Dew Sensor on at more than 0.62V

Port Extander (IC602) BU4094F

Pin No	IN/OUT	Signal Name	Function
1	IN	EXP-STB	Serial Data End at "H"
2	IN	DATA6	Serial Data
3	IN	SCK	Serial Clock
4	OUT	SP-H	SP at "H"
5	OUT	A-MUTE	Audio Mute at "H"
6	OUT	FG SEL1	FG Pulse Select 1
7	OUT	FG SEL2	FG Pulse Select 2
8	—	GND	GND
9	—	NC	NO CONNECTION
10	—	NC	NO CONNECTION
11	OUT	D-ON	Drum Motor ON at "H"
12	OUT	CAM-ON	Camera Block Power ON at "H"
13	OUT	JOG	Cue, Review, Still at "H"
14	OUT	PB-H	PB Mode at "H"
15	IN	EXP-OE	Data IN at "H"
16	—	VDD	VDD (+5V)

Character Generation IC (IC301) μPD6145G

Pin No	IN/OUT	Signal Name	Function
1	IN	$\overline{CS}$	Allways "L"
2	IN	SCK	Serial Clock
3	IN	CG STB	Character Generater Data Control
4	IN	DATA6	Serial Data
5	—	NC	NO. CONNECTION
6	—	VDD	VDD (+5V)
7	OUT	$\overline{CK\ OUT}$	7.5MHz OUT
8	OUT	OSC OUT	OSC OUT
9	IN	OSC IN	OSC IN
10	—	VSS	GND
11	OUT	V MON	Character Monitor Signal
12	OUT	VR	Character Signal Out 1
13	OUT	VG	NO. CONNECTION
14	OUT	VB	Character Signal Out 2
15	OUT	V BLK	Blanking Signal Out
16	—	NC	NO. CONNECTION
17	IN	TEST IN	GND
18	IN	EV-SYNC	V-Sync Input Signal
19	IN	EH-SYNC	H-Sync Input Signal
20	IN	HOLD	Allways "H"

DECK MECHANISM SECTION
DISASSEMBLY INSTRUCTIONS(DECK)

= Remark =

1. When removing the some components, work with care so as not break the plastic components.
2. Do not supply power to the unit during disassembly.
3. Place a cloth or some other soft material under the P.C.B. or Unit to prevent damage.
4. When reinstalling, ensure that the connectors are connected and electrical components have not been damaged.
5. The Cut Washer is not reusable. If removed, install a new one.

[1] CASSETTE HOLDER ASS'Y

(If not already removed the Driver P.C.B., remove the Driver P.C.B. refer to Disassembly instructions (SET) on page 1-4. Use step 1-12. Driver P.C.B. removal.)

(1) Push the Eject Lever (A) to place the unit in Cassette Up condition.
(2) Remove 4 Screws (B).
(3) Then pull out the Cassette Holder ASS'Y.

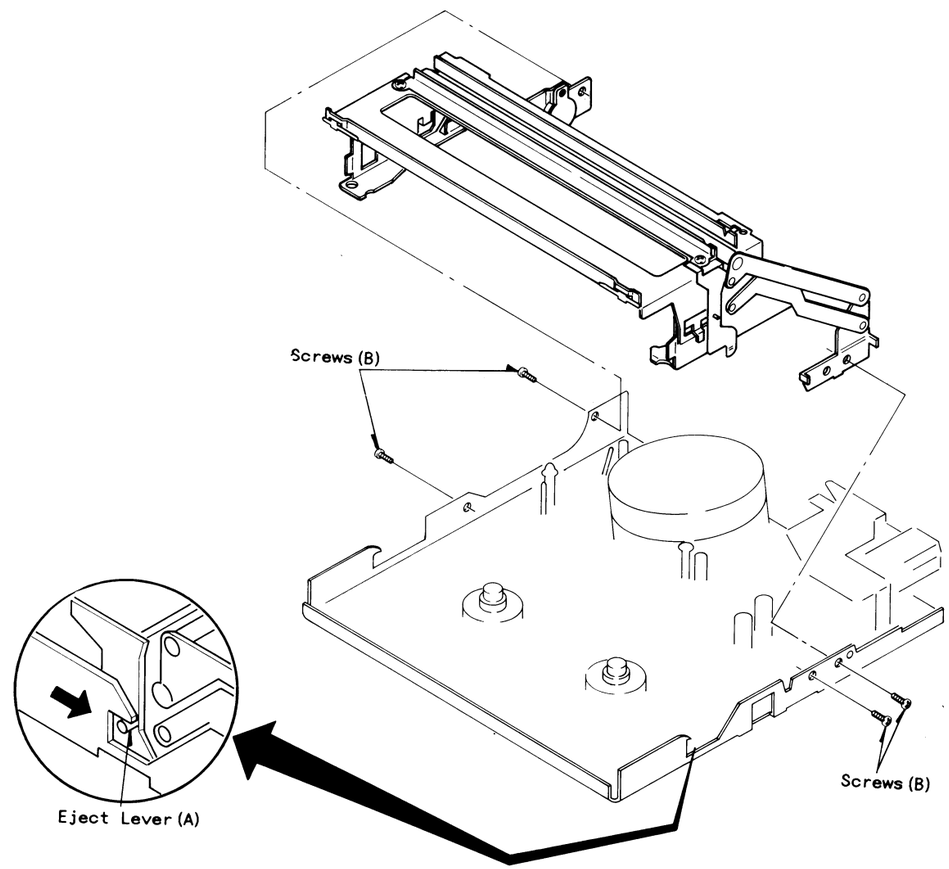

Fig. 2-1

[2] CYLINDER ASS'Y/Cylinder Base

(1) Remove 3 Screws (A), and take off the Cylinder Ass'y from Cylinder Base.
(2) Remove 3 Screws (B), and take off the Cylinder Base.

= Remark =
1. When removing the Cylinder Ass'y, work with care so as not to damage the any components.
2. Use gloves and do not touch the drum surface with bare fingers.
3. If the Video Head is defective, replace the complete upper drum with the Head.

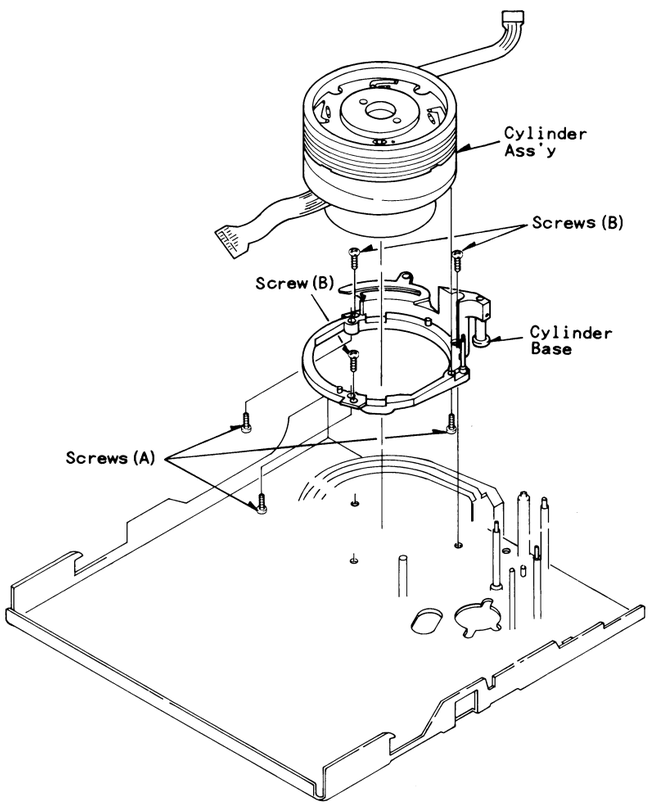

Fig. 2-2

[3] Power Logic Ass'y/Mode Switch/Stopper Loading/Logic Driver Ass'y/ Capstan Motor

1. Power Logic Ass'y
   (1) Remove 3 Screws (A) (H). At first remove the Lead wire with Motor. Then turn the Mode Select Switch counterclockwise slightly. Then take off the Power Logic Ass'y.

2. Mode Switch
   (1) Remove Cut Washer (B).
   (2) Remove the Gear Input.

3. Stopper Loading
   (1) Remove Cut Washer (C).
   (2) Remove Spring Stopper (D).

4. Logic Driver Ass'y
   (1) Remove Cut Washer (E).
   (2) Remove the Lever Guide Set.
   (3) Then remove the Logic Drive Ass'y

5. Capstan Motor
   (1) Remove 2 Screws (F)
   (2) Then remove Screw (G).
   (3) Then remove the Capstan Motor from Bottom Side.

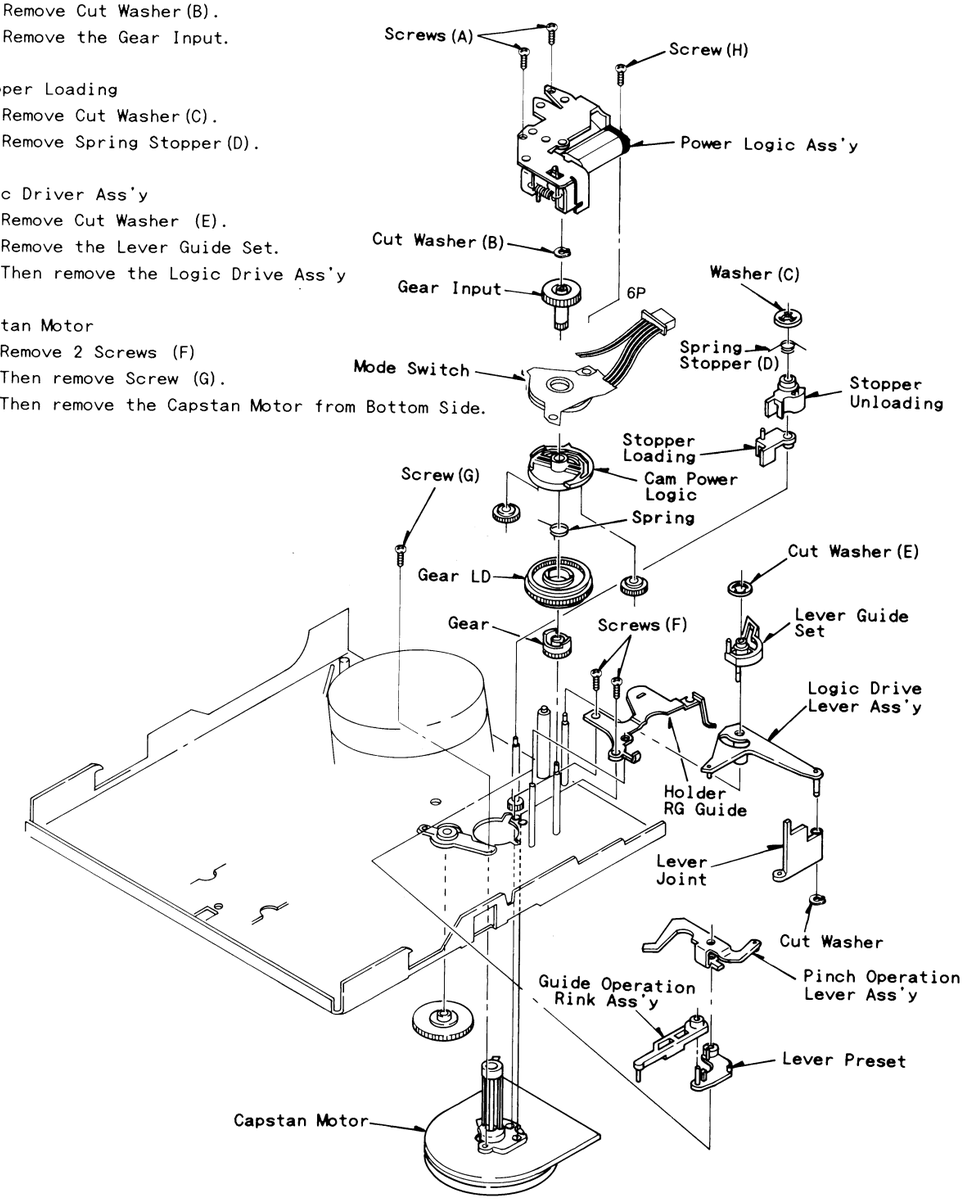

Fig. 2-3

[4] Guide Rail Outer

1. Guide Rail Outer
   (1) Remove 3 Screws (A) and (B).
   (2) Release Locking Tab (C).

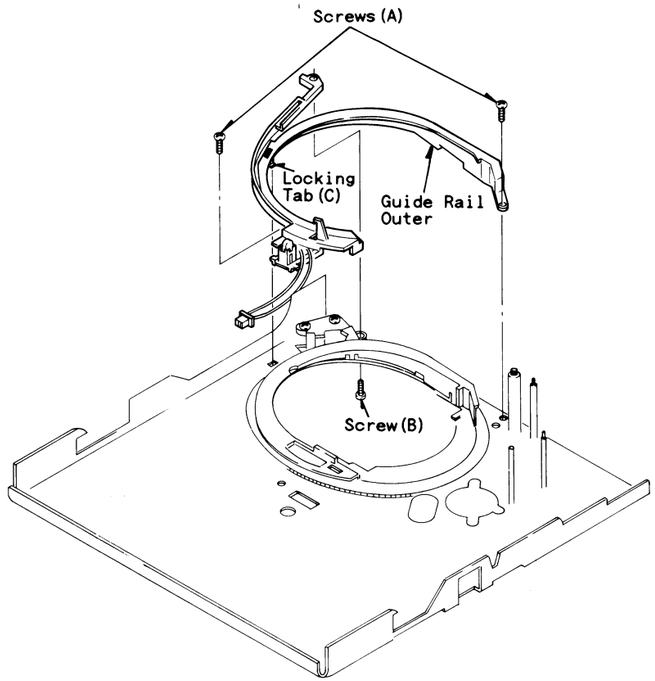

Fig. E2-4

[5] Cover Mechanism/Hand Brake Ass'y/Reel Base Ass'y/Slide Brake Operation /Lever LD Braket Joint/Brake Operation Lever Ass'y

1. Cover Mechanism
   (1) Remove 2 Screws (A).
   (2) Then take off the Cover Mechanism.

2. Hand Brake Ass'y
   (1) After removing the Cover Mechanism, unhook Spring (B).
   (2) Then take off the Hand Brake Ass'y.

3. Reel Base Ass'y
   (1) After removing the Hand Brake Ass'y, take off the Hand Brake Spring.

4. Slide Brake Operation
   (1) Remove Cut Washer (D).
   (2) Slide the Slide Brake Operation in the direction of arrow, then take off the Slide Brake Operation.

5. Lever LD Brake Joint/Brake Operation Lever Ass'y
   (1) Unhook Spring (C), then take off the Lever LD Brake Joint.
   (2) After removing the Lever LD Brake Joint, take off the Brake Lever Operation Lever Ass'y.

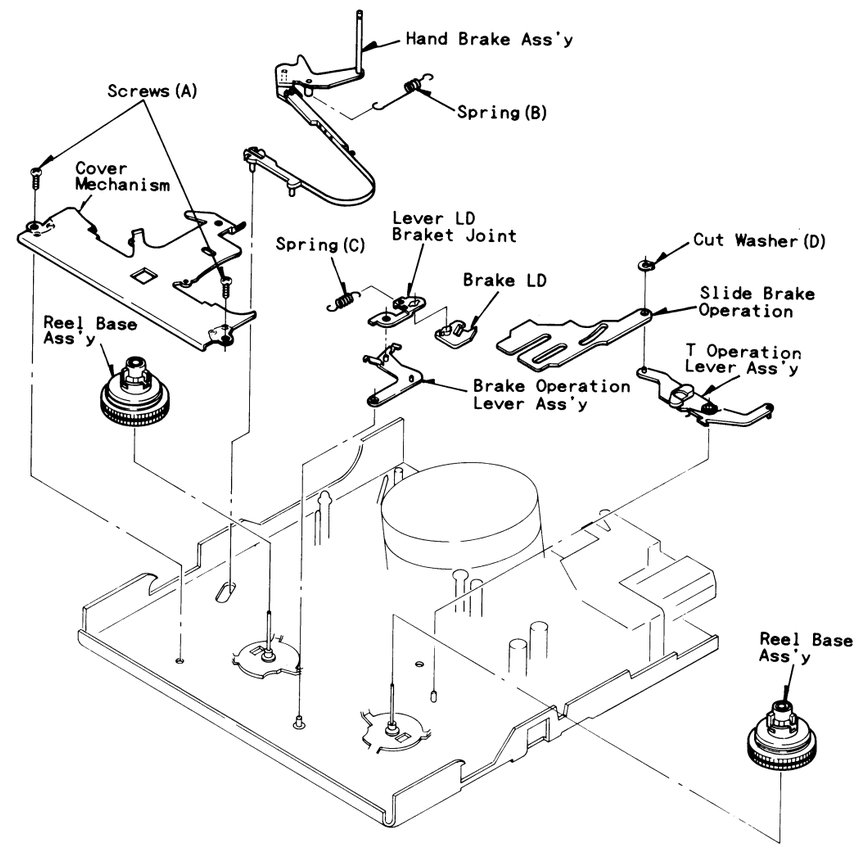

Fig. 2-5

[6] Braket Lever/Brake S and Brake T

1. Braket Lever
   (1) Remove Screw(A) and unhook Spring(B).
   (2) Then take off the Braket Lever.

2. Brake S and Brake T
   (1) After removing the Braket Lever, take off the Brake T and Brake S.

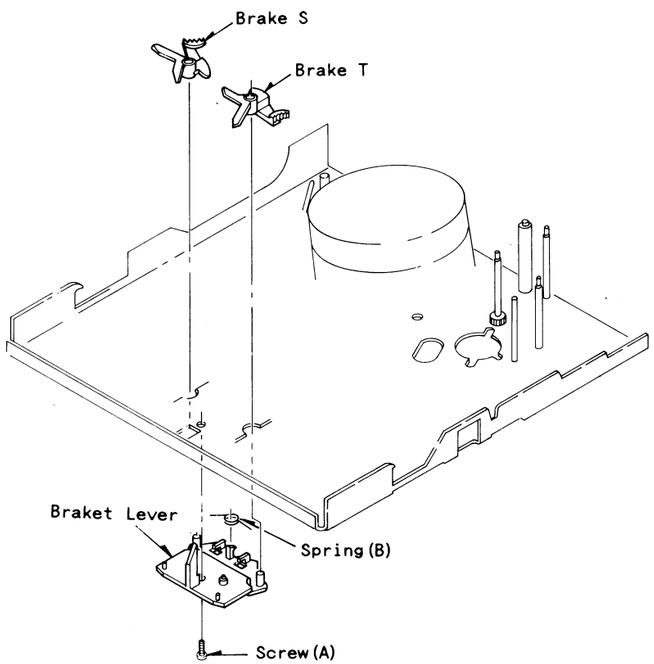

Fig. 2-6

[7] Slide Direction Ass'y/Joint Slide Ass'y/Swing Arm Ass'y/Holder R, L Switch
Swing Arm Ass'y Lever UBT Lock/Gear

1. Slide Direction Ass'y
   (1) Remove Cut Washer(A), then take off the Slide Direction Ass'y.

2. Joint Slide Ass'y
   (1) Remove Cut Washer(B), then take off the Joint Slide Ass'y.

3. Swing Arm Ass'y
   (1) After removing the Slide Direction Ass'y, remove Cut Washer(C).
   (2) Then take off the Swing Arm Ass'y.

4. Holder R, L Switch
   (1) Remove Screw(D), then take off the Holder R Switch.
   (2) Remove Screw(E), then take off the Holder L Switch.

5. Gear
   (1) Remove Cut Washer(G), then take off the Gear.

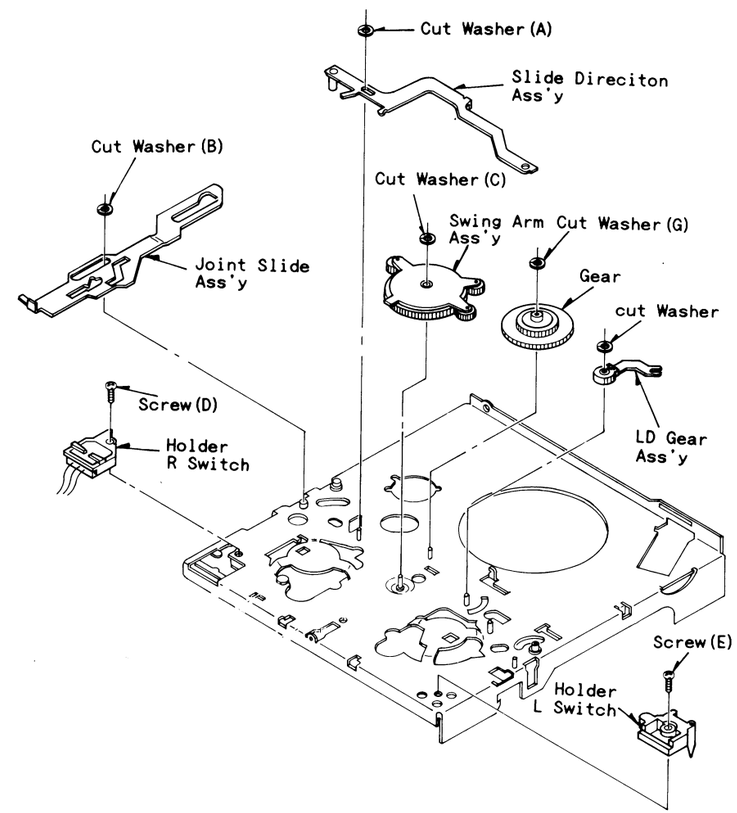

Fig. 2-7

SERVICE FIXTURES AND TOOLS

Followings are required for Deck Adjustment.

3-1. INSTRUMENT

a) Color TV Monitor
b) Oscilloscope

3-2. TOOL

a) Driver : + No. 00 (marketing good)

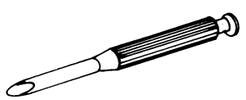

b) Driver : -2.5m/m

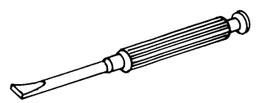

c) Driver (Special)

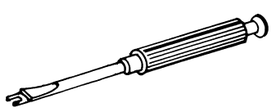

3-3. TAPE AND TORQUE METER

a) Alignment Tape : SP (FM6N)

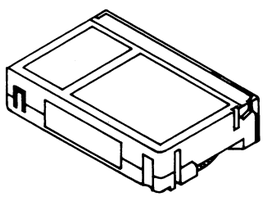

b) Torque Meter (SRK-8T-0102)

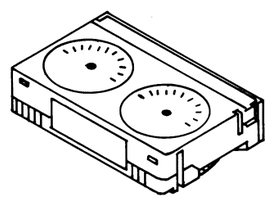

c) Blank Tape (P-5-30 or marketing good)

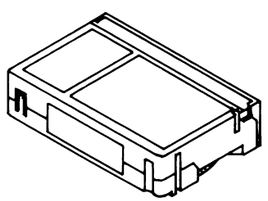

STANDARD MAINTENANCE

4-1. Cleaning

4-1-1. Cleaning of Video Head (Fig. 1)
Head cleaning by using a chamois skin.

1) Remove the right side cabinet.
2) Put on a glove (thin type) to avoid touching the upper drum and lower drum with bare hand.
3) Put a few drops of alcohol on the chamois skin, and by slightly placing it against the head trip, allow the upper drum to turn the right and left.

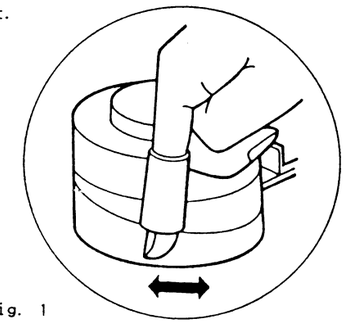

Fig. 1

= Remark =

a) The video head is of very hard material, but since it is very thin, avoid cleaning it vertically.
b) Wait for the cleaned part to dry out before operating the unit.
c) Do not reuse the stained chamois skin.

* When replacing the Upper Drum, replace it as a Unit beacause of its sensitivity.

4-2. Mode Select Switch Positioning (Fig. 2)

1) Setting Mode Select Switch on Deck, put 2 bosses on Mode Select Switch onto groove on Cam Power Logic as shown in Fig. 2.

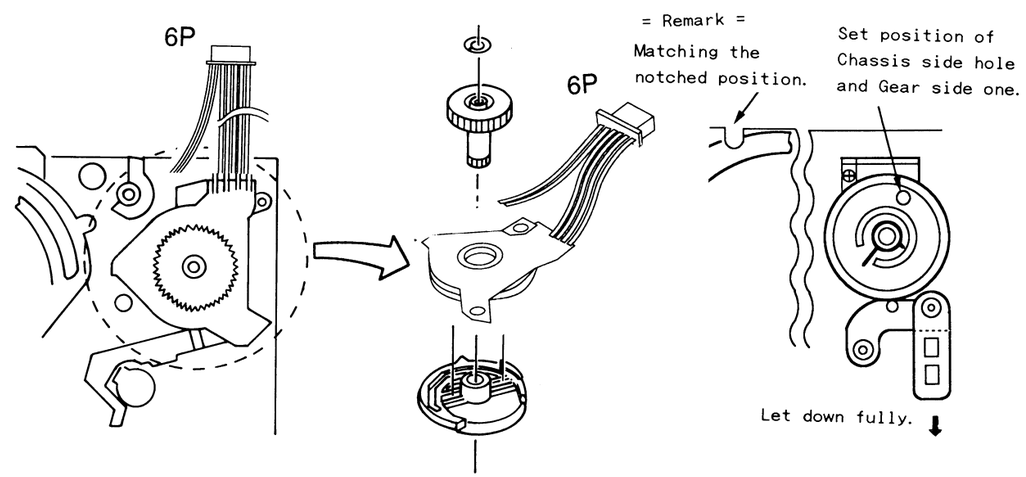

Fig. 2

4-3. BT Adjustment (Fig. 3)

1) On REC Mode, adjust the Adjustment Screw so that the BT torque is 5.5 ± 2gcm.

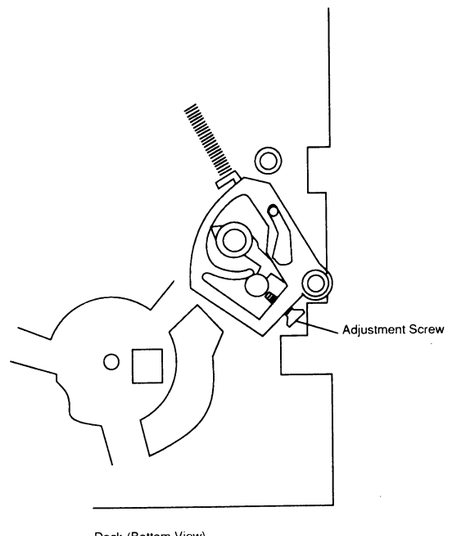

Fig. 3

4-4. End LED (Infrared) Setting (Fig. 4)

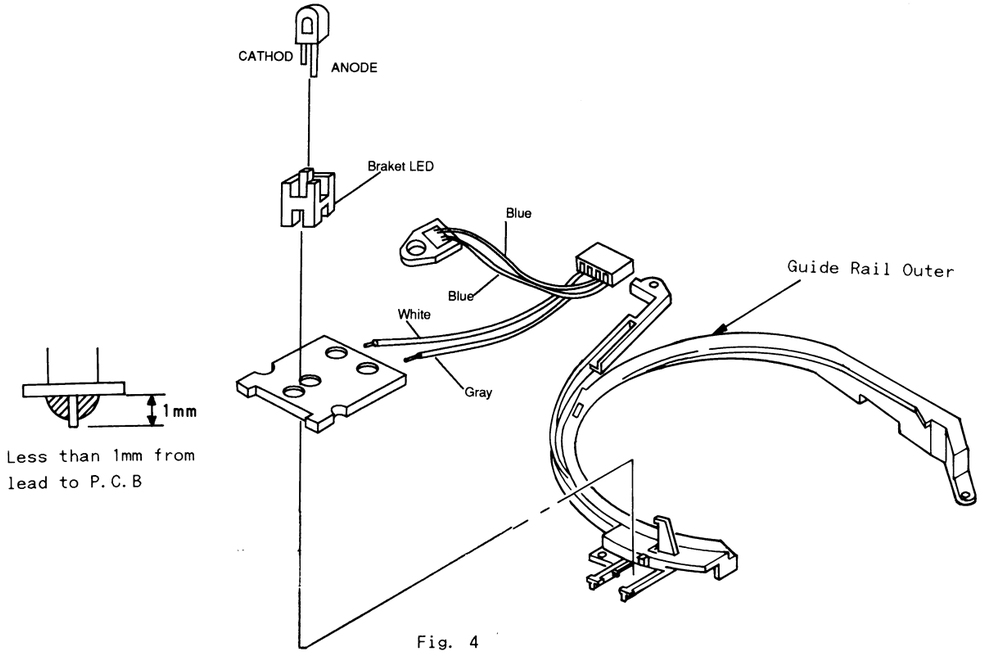

Fig. 4

= Remark =

a) Confirm wiring color.
b) When soldering, component lead must be less than 1mm from P.C.board.
c) LED must be set suitably to one's seat of Guide Rail (TG).
d) Do not touch the sensor portion of Dew Sensor.

4-5. Cylinder Base Ass'y Setting (Fig. 5)

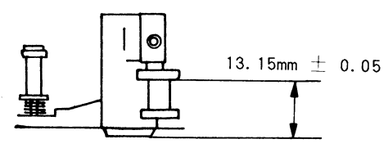

From Base Cylinder Setting side to upper frange of Guide T2 must be 13.15mm.

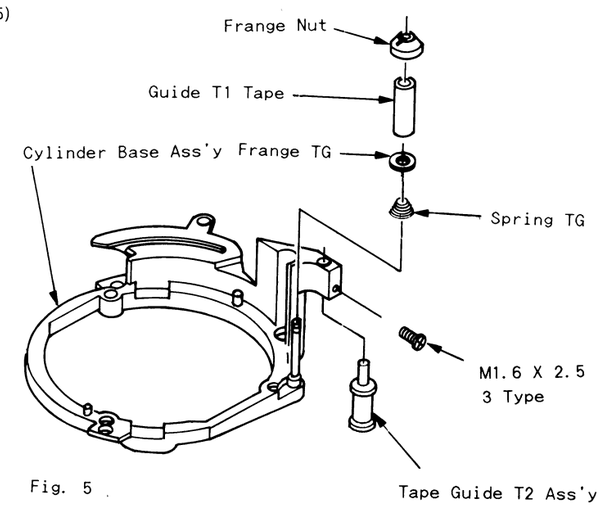

Fig. 5

=Remark=

1) Set the Spring TG large side below.
2) Adjust Tape Guide T2 as shown above
3) Adjust torque value of Tape Guide T2 Ass'y to 200g cm ±20.

4-6. Slide MG1 Ass'y Setting (Fig. 6)

1) Put Roller MG1 Guide, Roller MG1 Guide(2) onto Slide MG1 Ass'y, then fix it by Screws.
2) Adjust torque value to 150 ±20g cm.

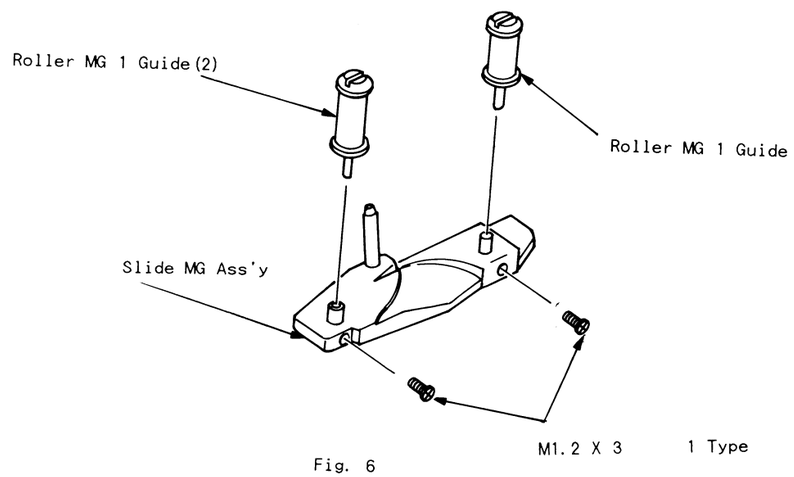

Fig. 6

4-7. Recognition SW, R Ass'y (Fig. 7)

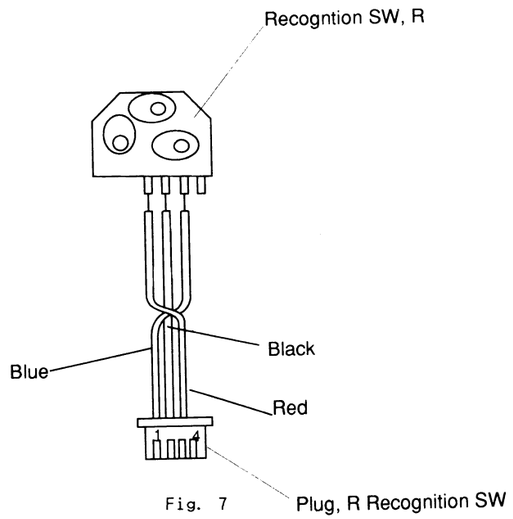

Fig. 7

= Remark =
Confirm wiring color.

4-8. Recognition Mode Switch (Fig. 8)

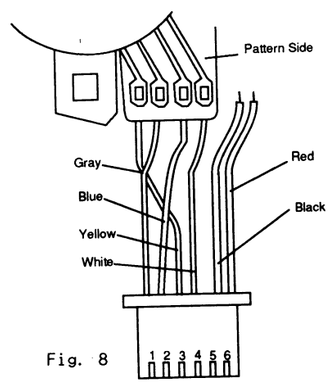

Fig. 8

= Remark =
Take care of the order of soldering with Lead wire.

MECHANICAL ADJUSTMENT INSTRUCTIONS

1. TAPE RUNNING ADJUSTMENT METHOD

1). TAPE RUNNING CONTROL

(SUPPLY SIDE)

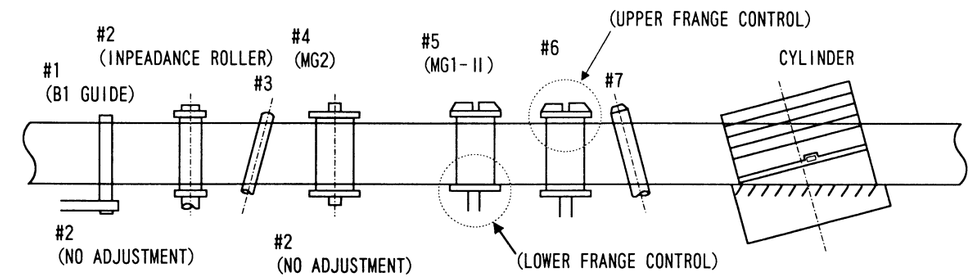

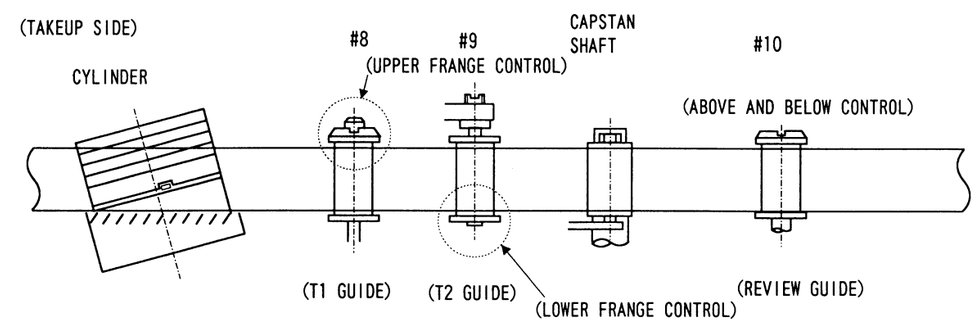

2). ENVELOPE ADJUSTMENT METHOD

ADJUSTMENT PREPARATION

1) Clean tape running side (Tape Guide, Drum, Capstan Post, Pinch Roller).
2) Connection to Oscilloscope.

1ch	: 1 CH	TP123
External Trigger	: RF - SW	TP07
GND	: GND	TP404

3) Play alignment tape for tracking. Confirm RF Waveform on both Take up Side and SupplySide flat (Refer to Fig. 1-1-a). In case that mormal waveform does no appear, adjust by the below method.

· In case of RF Waveform on Take up side not to be flat. (Refer to Fig. 1-1-b)

1. Adjust waveform according to Supply Side Adjustment.

· In case of RF Waveform on Supply side not to be flat. (Fig. 1-1-c)

2. Adjust waveform according to Take up Side Adjustment.

4) Perform temporary adjustment of ATF, Balance, Volume. About adjustment method, refer to the item of temporary adjsutment of ATF BAL VOLUME Adjustment Method on Electrical Adjsutment Method.

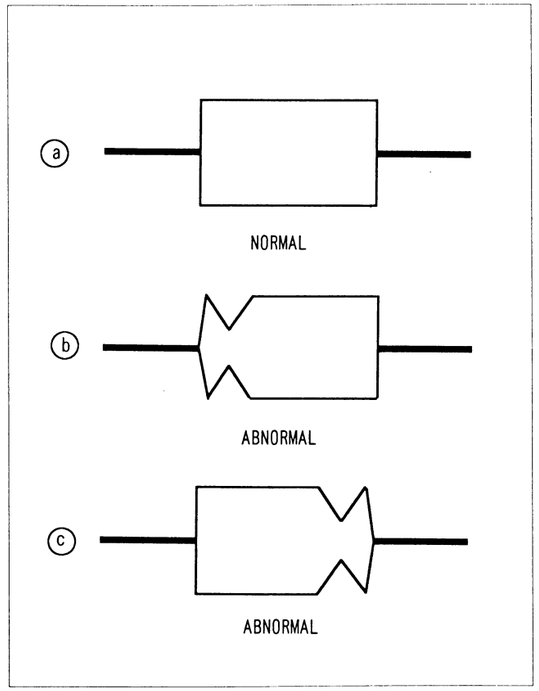

Fig. 1-1

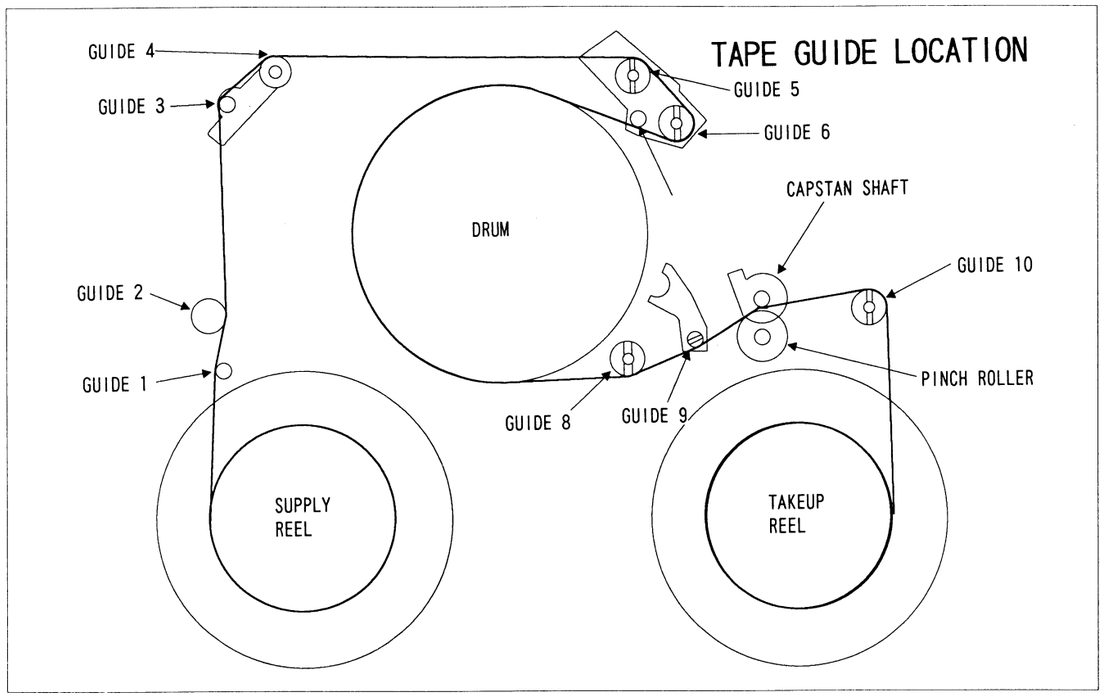

Fig. 1-2 (TOP VIEW)

Supply Side Adjustment

1) Play alignment tape (FM6-N) for tracking, confirm the supply side waveform. In case that the waveform is not about flat (Fig. 1-3), adjust it according to below method.
2) Adjust the supply side waveform to be more than 75% by turning the No. 6 Guide every 90° clockwise. If turning clockwise cause the waveform to reduce, perform same adjsutment by turning counterclockwise. (Fig. 1-3)

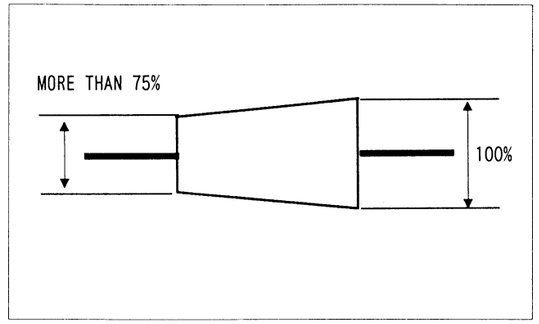

Fig. 1-3

3) Make the RF waveform envelope 2/3 by turning ATF Balance Volume (Refer to Fig. 1-4)

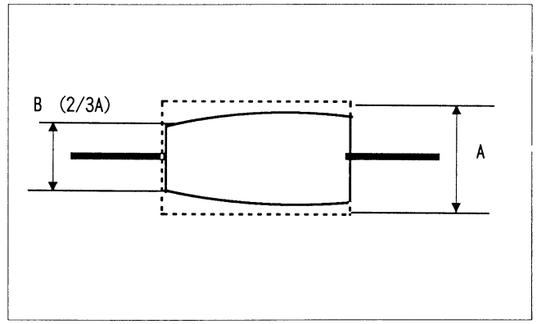

Fig. 1-4

4) Slightly swell Supply side waveform by turning No. 6 Guide. (Fig. 1-5)

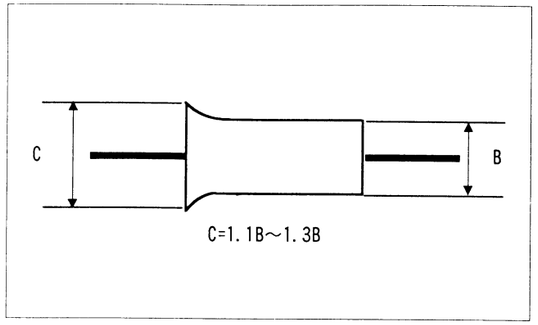

Fig. 1-5

5) Make the waveform flat by turning No 5 Guide. (Fig. 1-6)

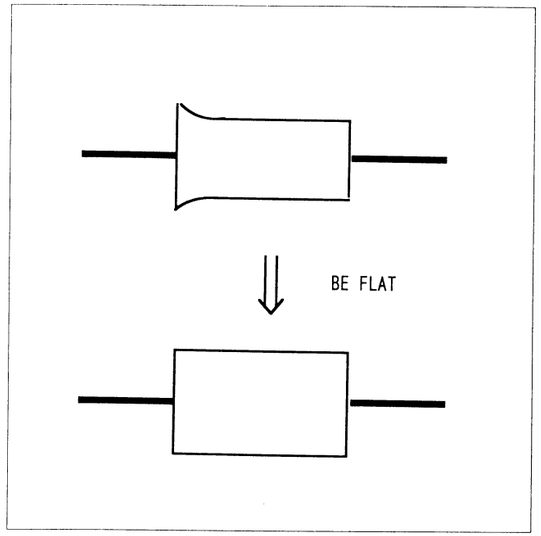

Fig. 1-6

Take up side Adjustment

1) Play alignment tape(FM6-N) for Tracking, then confirm the Take up Side waveform.
   In case of not being flat, adjust the waveform according to below method. (Fig. 1-7)
2) Make the Take up side waveform more than 75% by turning No. 9 Guide every 90°. (Fig. 1-7)

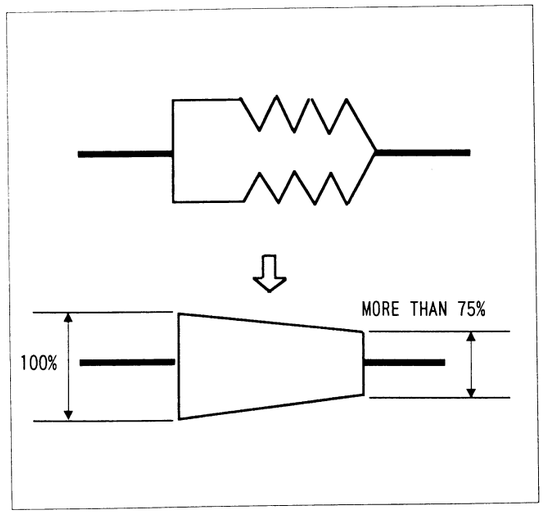

Fig. 1-7

3) Make the RF waveform envelope 2/3 by turning ATF Balance Volume(VR403). (Fig. 1-8)

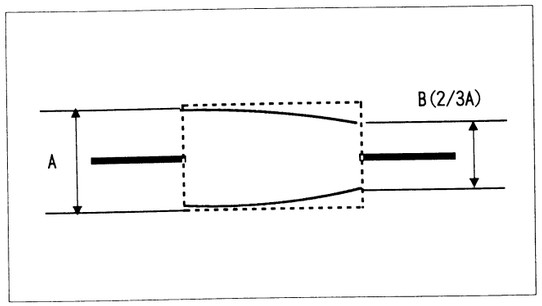

Fig. 1-8

4) Slightly swell Take up Side Waveform by turning No. 9 Guide. (Fig. 1-9)

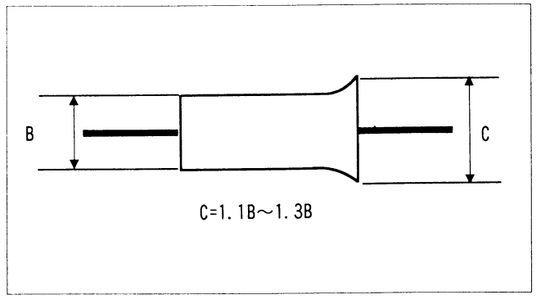

Fig. 1-9

5) Make the waveform flat by turning No. 8 Guide. (Fig. 1-10)

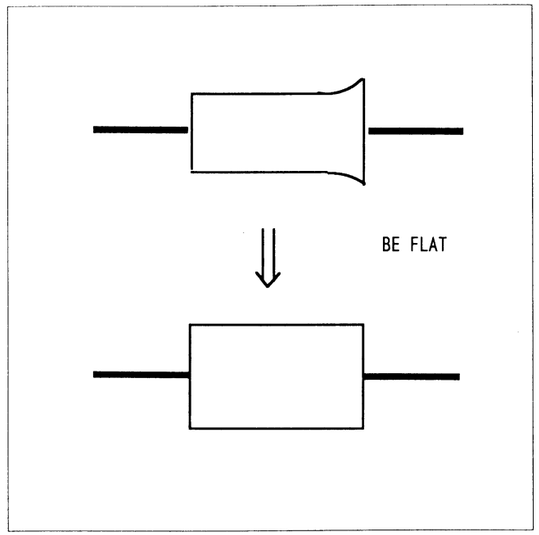

Fig. 1-10

6) Confirm the upper frange portion of No. 8 Guide not to occur tape curling. If tape curling occur, back to 4), then adjust it again.
7) After adjustment, on PLAY Mode after completion of loading, after CUE/REV or on PLAY Mode after REW, confirm waveform to get up horizontally. In case of not getting, back to 4), then adjust it again. In this case, do not turn more than 15° once.

Cheking after adjustment

1. Tracking Check

1) Play alignment tape (FM6-N) for tracking.
2) Make the RF waveform envelope 2/3 by turning ATF Balance Volume(VR403). (Fig. 1-11)

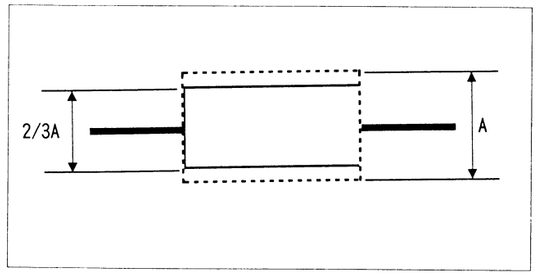

Fig. 1-11

3) Confirm that 75% of maximum envelope is minimum envelope of RF Waveform in this condition. (Fig. 1-12)

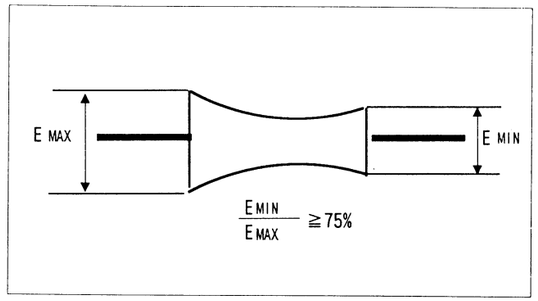

Fig. 1-12

4) In this case, confirm change quantity of RF waveform envelope to be as shown in Fig. 1-13.

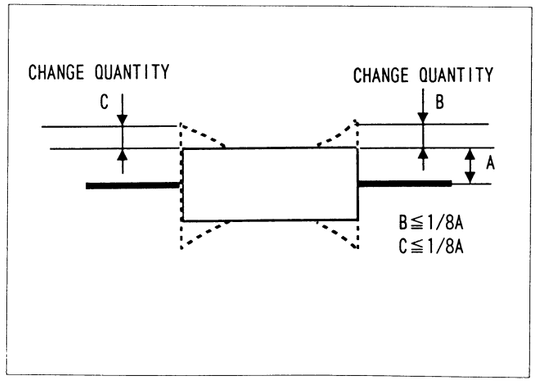

Fig. 1-13

5) On REV Mode, confirm the waveform noise pitch is equal. In case of not equal, adjust the waveform according to the below method.
   (Refer to Fig. 1-14)

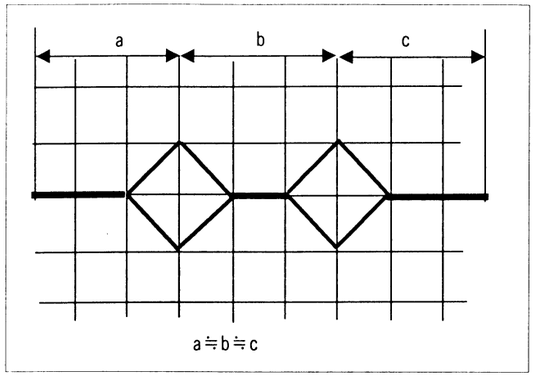

Fig. 1-14

6) On REV Mode, In case of occuring the tape curling, on upper frange or lower frange on No. 8 Guide, No. 9 Guide, remove tape curling by turning No. 10 Guide every 45°. (Fig. 1-15)

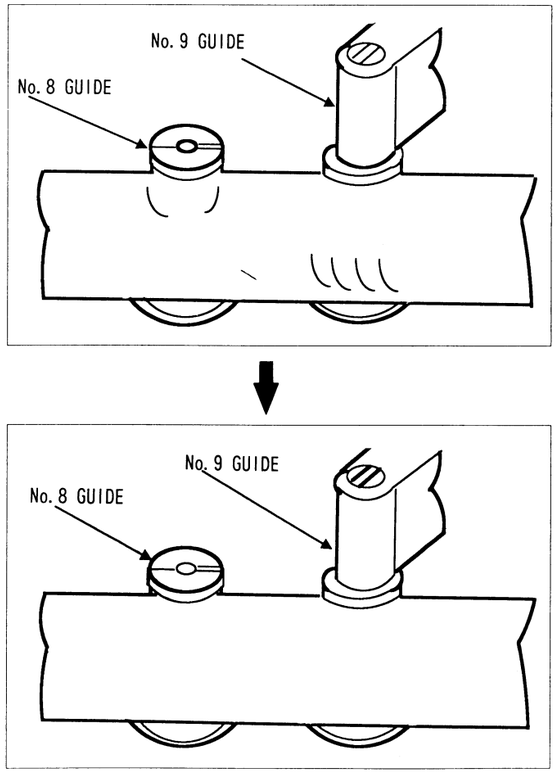

Fig. 1-15

7) After completion of all running adjustment, perform the adjustment of ATF BAL VOL.
   (Refer to Electrical Adjustment)

Supply Side Noise pitch stuffing

1) On PLAY Mode, confirm RF waveform to be flat.

[In case of not being flat]
Adjust the height of No. 6 Guide, according to the Supply Side Adjustment

[In case of being flat]
Adjust the height of No. 5 Guide, according to the Supply Side Adjustment

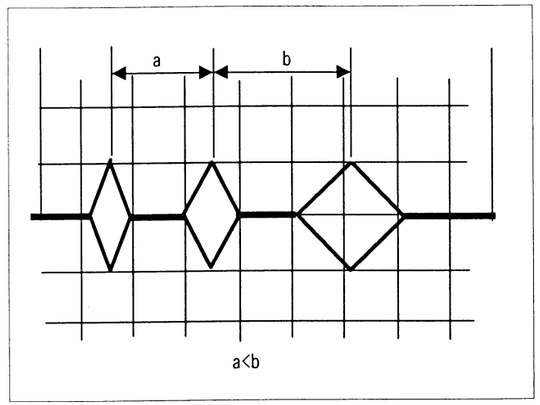

Fig. 1-16

Take up Side Noise Pitch Stuffing

1) On PLAY Mode, adjust the height of No. 8 Guide, No. 9 Guide according to the take up side adjustment.

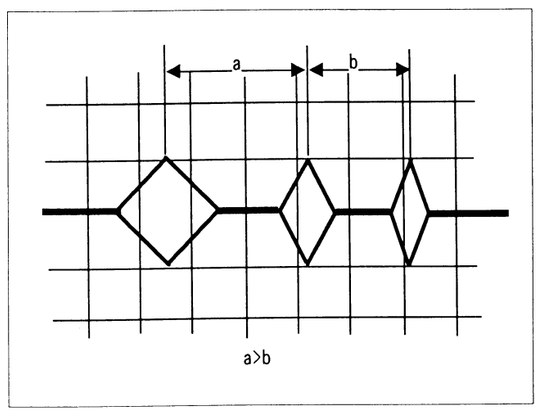

Fig. 1-17

2) Confirm that tape curling does not occur on frange portion on No. 8 Guide, No. 9 Guide. If occuring the tape curling, adjust the tape curling not to occur by turning No. 10 Guide. (Checking after Adjustment) Refer to 6.)

Getting Up Check

1) After completion of loading, on PLAY Mode, after CUE/REV, or on PLAY Mode After FF, confirm the RF waveform to get up horizontally.
In case of not getting up horizontally, adjust waveform according to below Method.

<In case of occuring noise from supply side(lower portion on picture side after completion of loading, on PLAY Mode, on getting up>

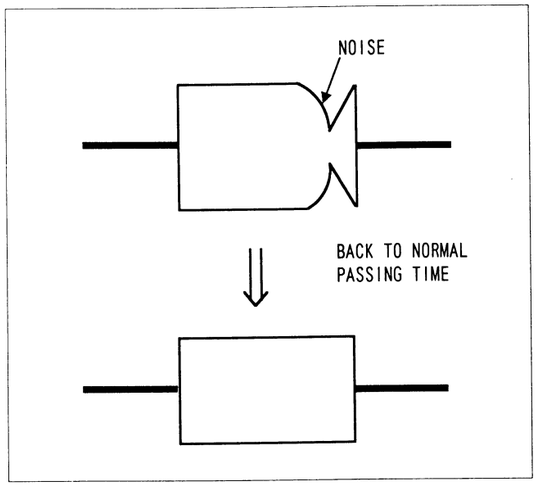

Fig. 1-18

Turn No. 9 Guide 30° counterclockwise, again perform the getting up check,

<In case of occuring noise from take up side(lower portion on picture side after completion of loading, on PLAY Mode, on getting up>

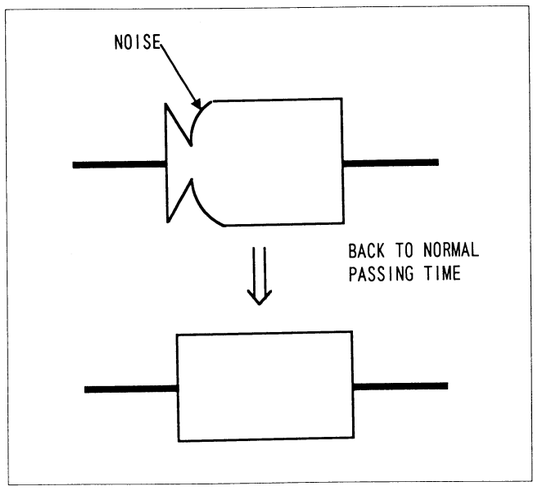

Fig. 1-19

While performing getting up check, adjsut No. 5 Guide by turning every 30° .

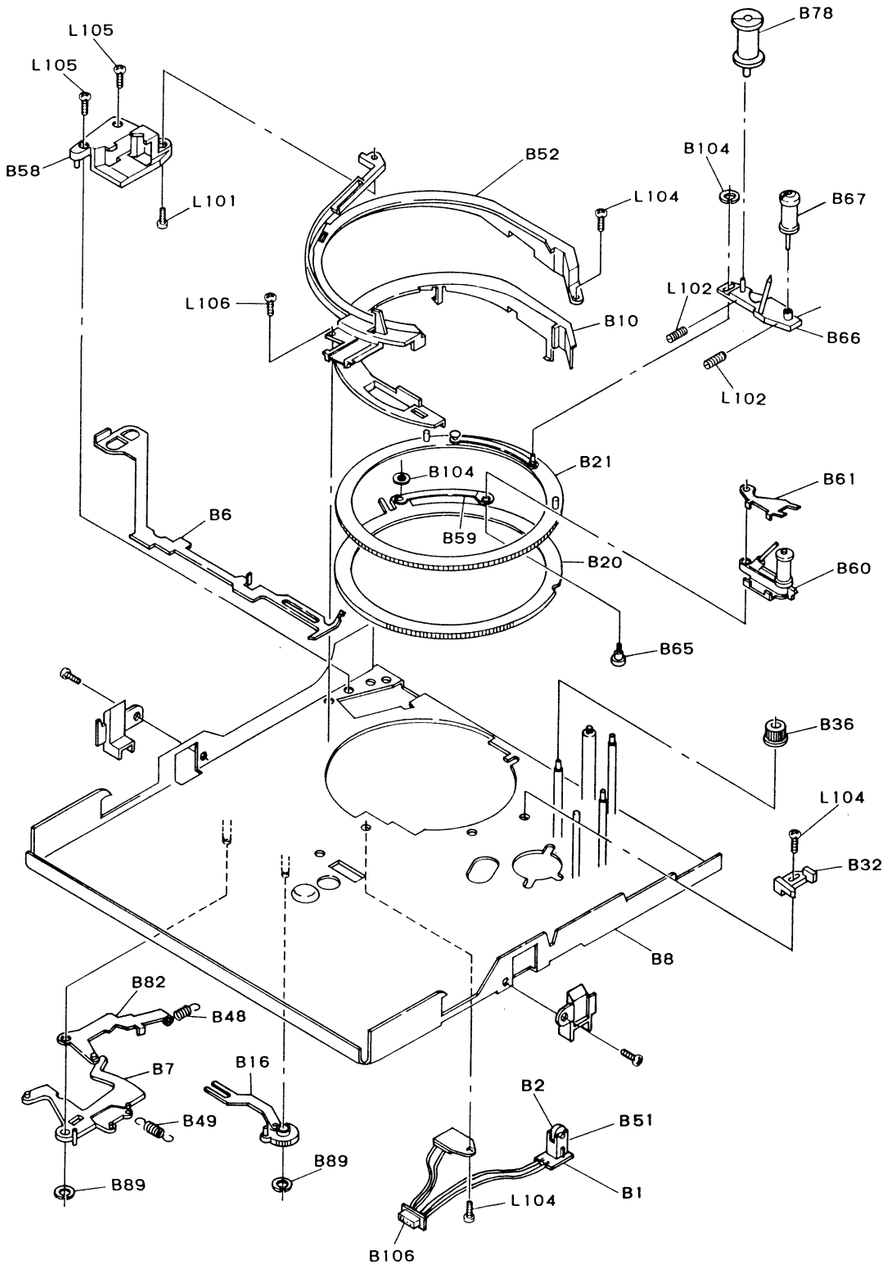

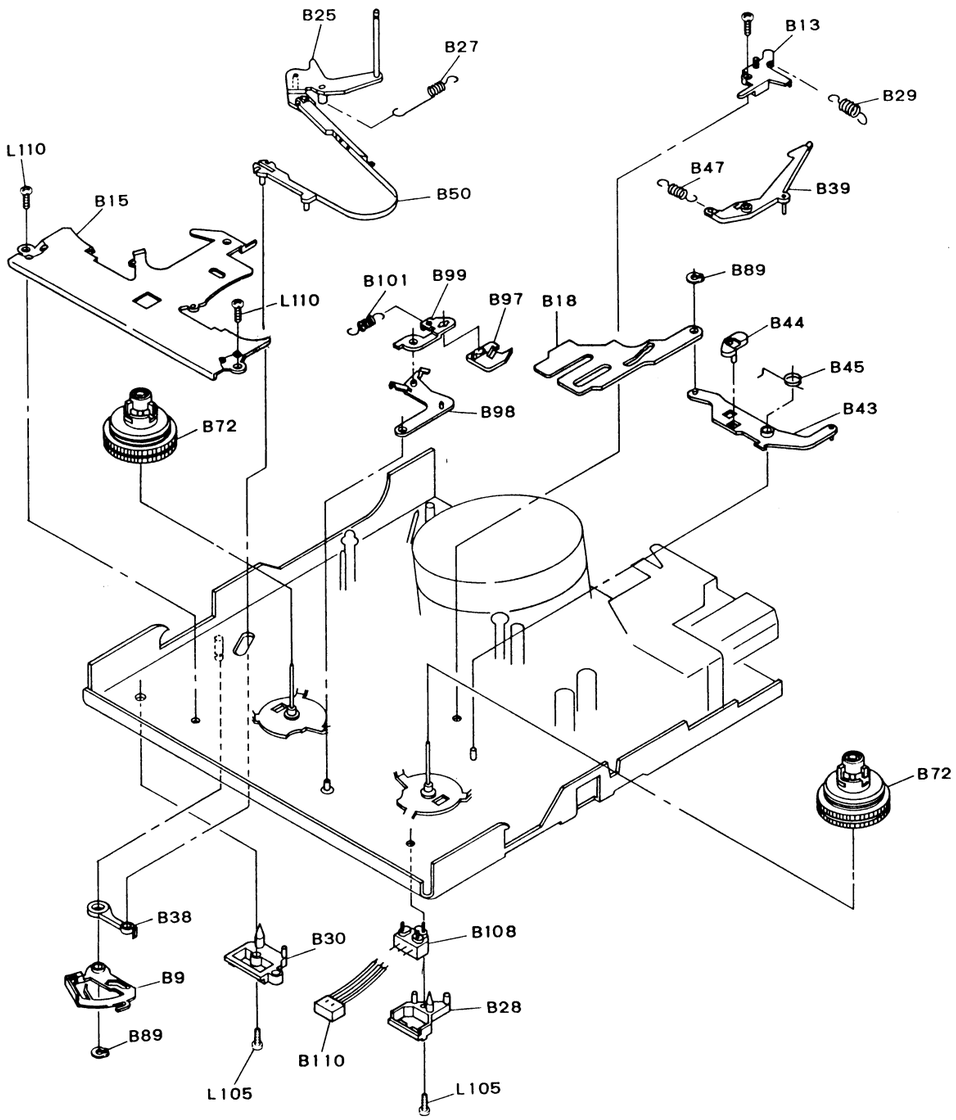
B25
B27
B13
B29
L110
B15
B50
B47
B39
B101
B99
B97
B18
B89
L110
B44
B45
B43
B98
B72
B72
B38
B30
B108
B9
B28
B89
B110
L105
L105

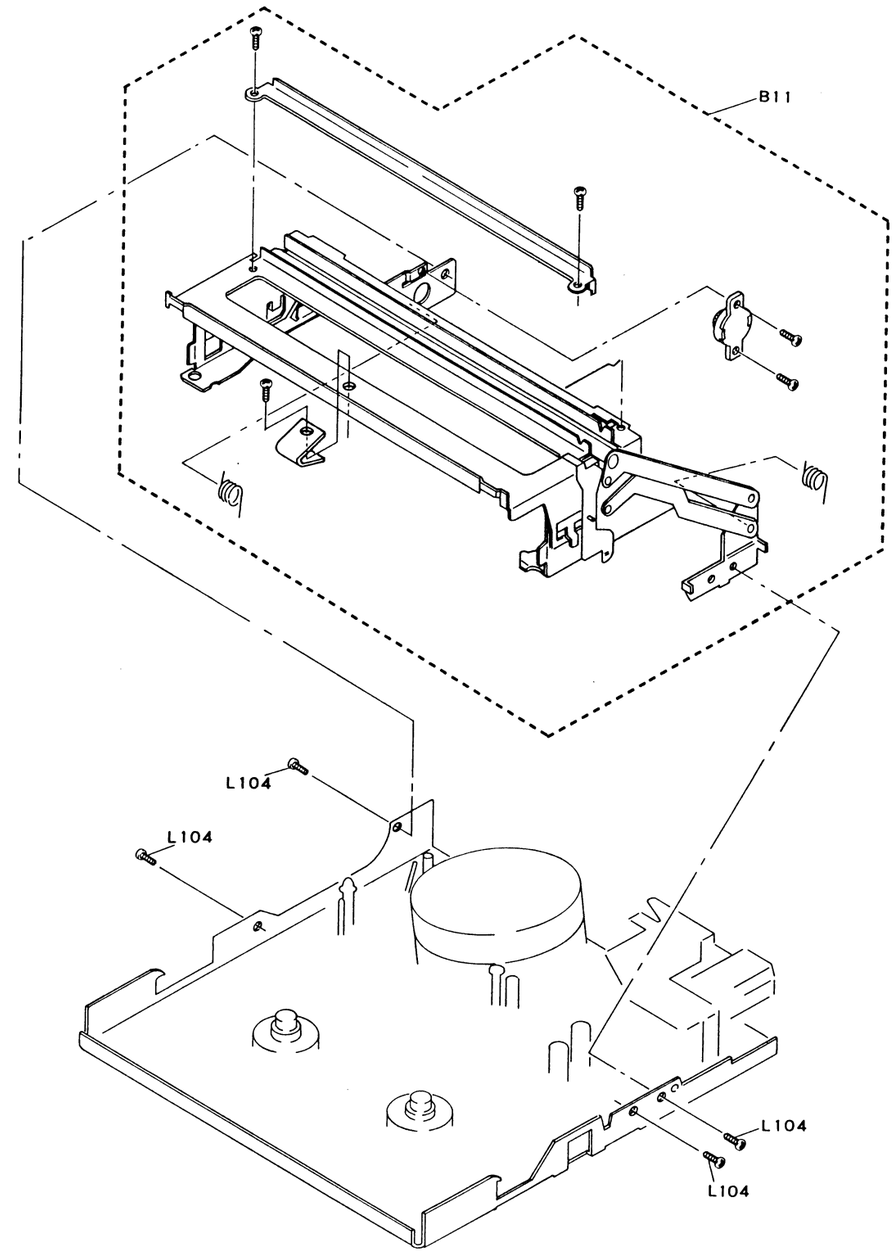
B11
L104
L104
L104
L104

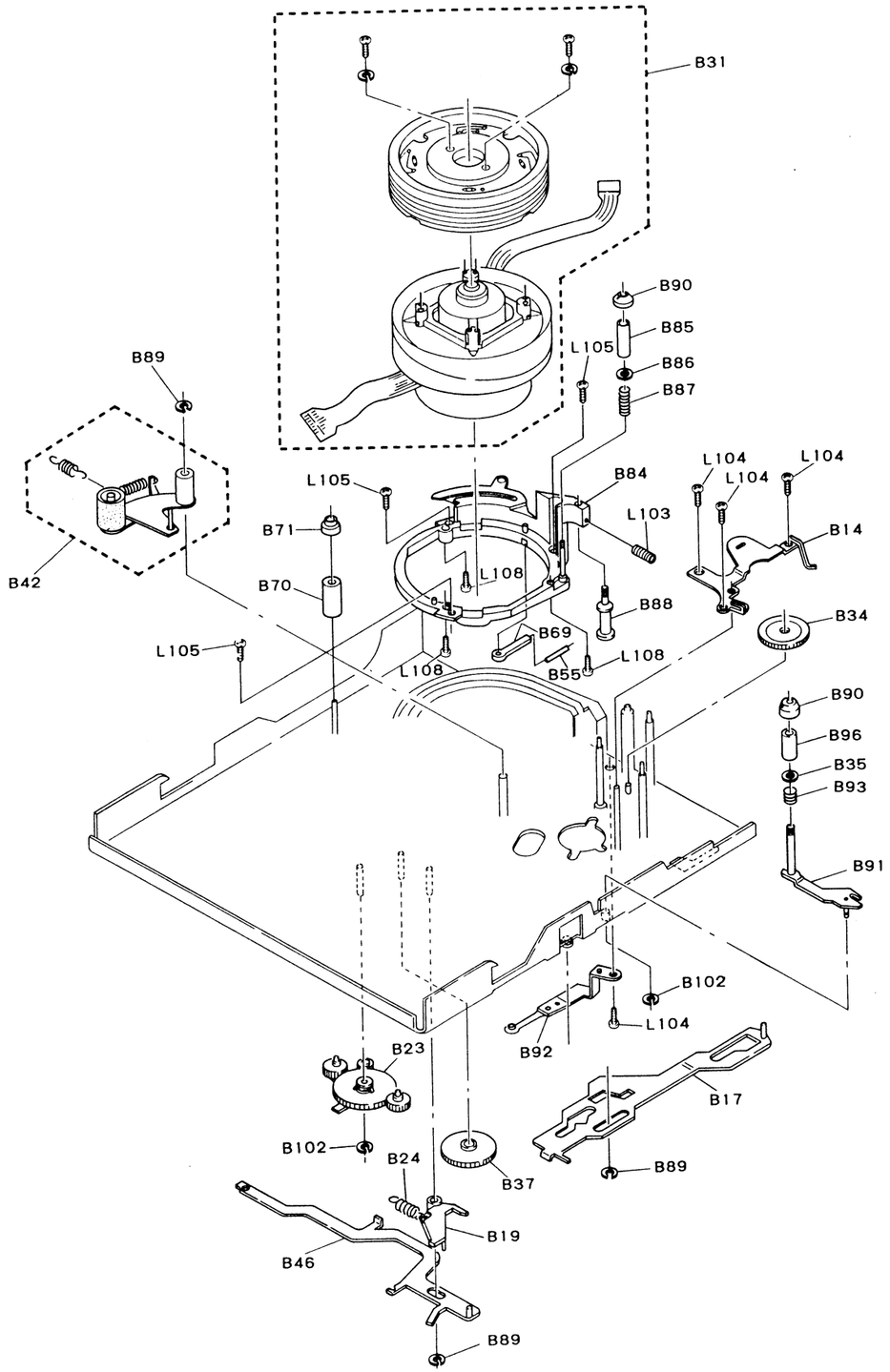
B31
B90
B85
L105
B86
B87
B89
L105
B84
L104
L104
L104
L103
B14
B71
B42
B70
L108
B88
B34
L105
B69
L108
L108
B55
B90
B96
B35
B93
B91
B102
L104
B92
B23
B17
B102
B24
B37
B89
B19
B46
B89

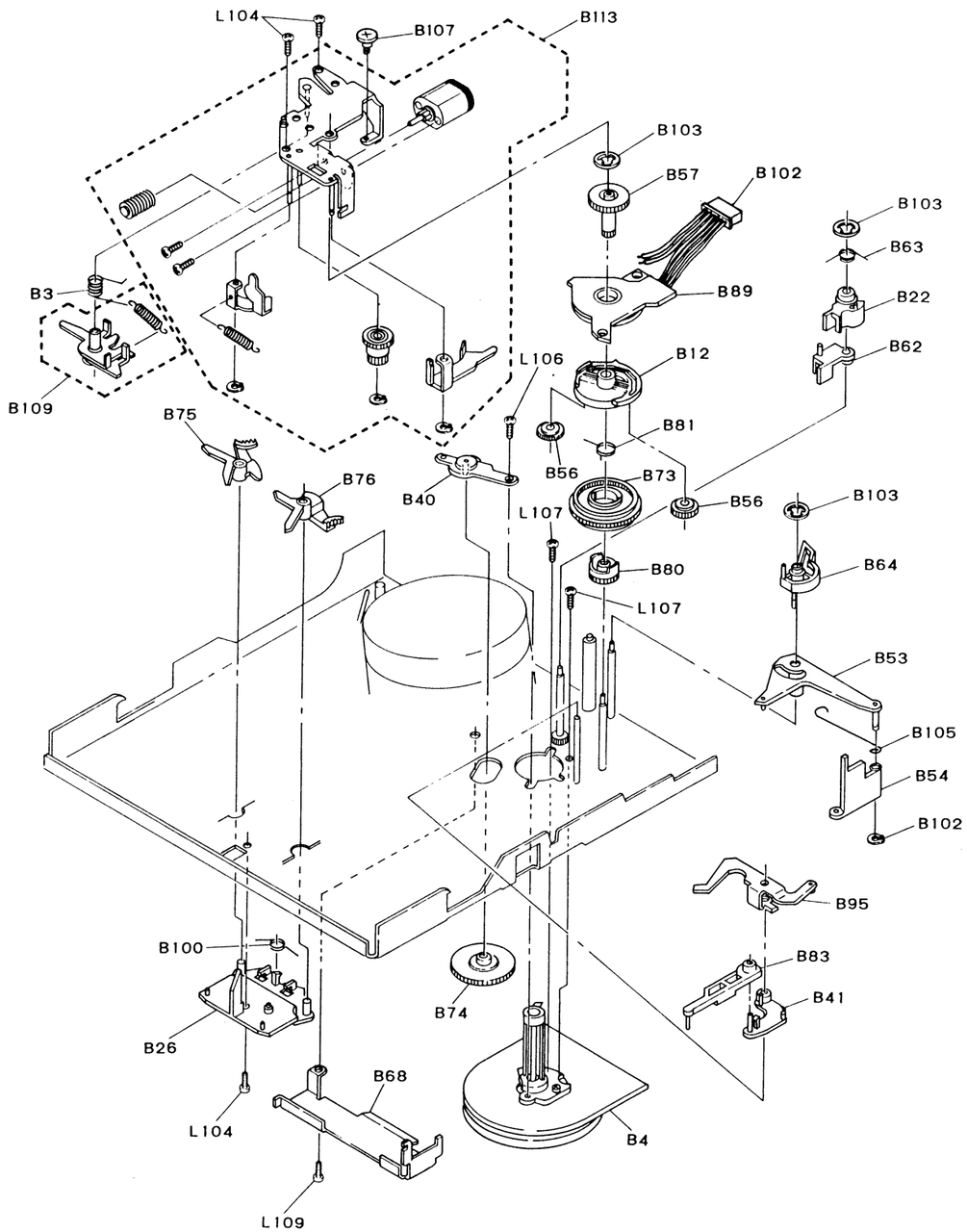
L104
B107
B113
B103
B57
B102
B103
B63
B3
B89
B22
B12
B62
L106
B109
B75
B81
B56
B73
B76
B40
B56
B103
L107
B80
B64
L107
B53
B105
B54
B102
B95
B100
B83
B41
B74
B26
B68
L104
B4
L109

DECK MECHANICAL PARTS LIST

REF.NO.	DESCRIPTION	PART NO.
B-1	PCB	BC1800G01001
B-2	LED	EPLT462T3***
B-3	Spring MG1 Thrust	0VM401048
B-4	Capstan Moter	1640403
B-5	Spacer	0VM402215
B-6	Slide BT Set	0VM200343
B-7	Lever L, BT Lock	0VM300328
B-8	Chassis Ass'y	0VM100089
B-9	Rever BT Adjust	0VM300715
B-10	Guide Rail Inner	0VM100092
B-11	Cassette Holder Ass'y	0VM200328
B-12	Cam Power Logic	0VM200332
B-13	Bracket Spring	0VM300335
B-14	Holder RG Guide	0VM300393
B-15	Cover Mechanism	0VM200385
B-16	DL Gear Ass'y	0VM400970
B-17	Joint Slide Ass'y	0VM300302
B-18	Slide Brake Saucer	0VM300304
B-19	Lever Review Brake	0VM400972
B-20	Lower Loading Ring Ass'y	0VM300307
B-21	Upper Loading Ring Ass'y	0VM300309
B-22	Stopper Unloading	0VM300311
B-23	Swing Arm Ass'y	0VM300319
B-24	Spring Review Brake	0VM400973
B-25	Back Tention Lever Ass'y	0VM400983
B-26	Bracket Lever	0VM300331
B-27	Spring Back Tention	0VM400992
B-28	Holder R SW	0VM300337
B-29	Spring BT Release	0VM400993
B-30	Holder, L SW	0VM300364
B-31	Cylinder Drum Ass'y	0VM300587
B-32	Ring Guide	0VM401038
B-34	Gear Lower	0VM401039
B-35	Flange TG	0VM400895
B-36	Gear Upper	0VM401040
B-37	Gear Reduction	0VM401085
B-38	Holder Joint	0VM401131
B-39	T Operation Lever Ass'y	0VM401152
B-40	Bracket Gear Ass'y	0VM401166
B-41	Lever Preset	0VM400957
B-42	Pinch Lever Ass'y	0VM400963
B-43	Reel Operation Lever Ass'y	0VM401179
B-44	Brake T Sub	0VM401184
B-45	Spring T Sub Brake	0VM401296
B-46	Slide Direction Ass'y	0VM401361
B-47	Spring T Saucer	0VM401363
B-48	Spring Direction	0VM401364
B-49	Spring BT Lock	0VM401365
B-50	Band Brake Ass'y	0VM400988
B-51	Bracket LED	0VM401140
B-52	Guide Rail Outer	0VM100091
B-53	Logic Drive Lever Ass'y	0VM400996
B-54	Lever Joint	0VM401001
B-56	Gear Planetaly	0VM401019
B-57	Gear Input	0VM401021
B-58	Guide Catcher	0VM200337
B-59	Ring Lower Drive	0VM401031
B-60	Moving Guide 2 Ass'y	0VM401052
B-61	Bracket; Slide N	0VM402874
B-62	Stopper Loading	0VM401041
B-63	Spring Stopper	0VM401042
B-64	Lever Guide Set	0VM401045

REF.NO.	DESCRIPTION	PART NO.
B-65	Order Screw MG2	0VM401055
B-66	Slide MG1 Ass'y	0VM300312
B-67	Roller MG1 Guide	0VM300417
B-68	Bracket PCB	0VM300412
B-69	Rug; Earth	0VM402102
B-70	Roller Impedance	0VM401059
B-71	Flange Impedance R	0VM401060
B-72	Reel Base Ass'y	0VM401061
B-73	Gear LD Drive	0VM300305
B-74	Gear Primary	0VM401086
B-75	Brake S	0VM401091
B-76	Brake T	0VM401092
B-78	Roller MG Guide (2)	0VM300657
B-80	Gear Output	0VM401017
B-81	Spring MG2	0VM401301
B-82	BT Lock Ass'y	0VM402328
B-83	Guide Saucer Link Ass'y	0VM401139
B-84	Cylinder Base Ass'y	0VM300292
B-85	Guide T1 Tape	0VM400894
B-86	Flange TG	0VM400895
B-87	Spring TG	0VM400896
B-88	Tape Guide T2 Ass'y	0VM400897
B-89	Switch Mode N	SSR0103HD001
B-90	Flange Nut	0VM400978
B-91	RG Lever Ass'y	0VM400979
B-92	Earth Brash Ass'y	0VM401292
B-93	Spring RG	0VM400982
B-95	Pinch Saucer Lever Ass'y	0VM401299
B-96	Guide T2 Tape	0VM401116
B-97	Brake LD	0VM401158
B-98	Brake Operation Lever-A	0VM401185
B-99	Lever LD Brake Joint	0VM401187
B-100	Spring Main Brake	0VM401366
B-101	Spring LD Brake	0VM401367
B-102	Connector Ass'y 6P	0VM400542
B-103	Washer Fixer	0VM401734
B-104	Cut Washer 0.8	0VM401745
B-105	Spring Logic Drive	0VM401869
B-106	Dew Senser;H	PCZHUMZHH001
B-107	Screw Mode SW	0VM401323
B-108	Recognition SW	5622203
B-109	MG1 Lever Ass'y	0VM401049
B-110	Plug; R Recog SW	0VM400391
B-111	Holder; Tape End Senser	0VM300855
B-112	Holder; Tape End Senser	0VM300856
B-113	BS Power Logic Ass'y	0VM300659
L101	Screw, P-Tight Bind Head M1.6 X6	
L102	Screw, Small, Pan Head M1.2 X3	
L104	Screw, Small, Pan Hea M1.6 X2.5	
L105	Screw, Small, Pan Head M1.6 X4	
L106	Screw, Small, Pan Head M1.6 X3	
L107	Screw, Small, Pan Head M1.6 X2	
L108	Screw, Small, Pan Head M1.6 X5	
L109	Screw, Small, Pan Head M1.6 X1.8	
L110	Screw, S-Tight Bind Head M1.6 X3	

PARTS LIST(CHARGER)

0VSA04170

Consists of the following:

Ref.No.	Description	PartNo.
	AC CHARGER A PCB ASSEMBLY	not available
	AC CHARGER B PCB ASSEMBLY	not available
	P.C.B. AC CHARGER (C1580EA)	BC1580F01008

AC CHARGER A PCB ASSEMBLY

Ref.No.	Description	PartNo.
	CAPACITORS	
C951⚠	METALLIZED FILM 0.22μF/250V M or	CA2E224MS002
⚠	METALLIZED FILM 0.22μF/250V K	CTR2EK000224
C953	SAFTY 0.0022μF/400V	122Z649
C954	SAFTY 0.0022μF/400V	122Z649
C955	SAFTY 0.0022μF/400V	122Z649
C956	SAFTY 0.0022μF/400V	122Z649
C957	ELECTROLYTIC 47μF/400V M	122Z651
C958	MP 0.01μF/630V(K)	122Z650
C959	ELECTROLYTIC 100μF/35V M	126E107S
C960	ELECTROLYTIC 33μF/35V M	126E336S
C961	CHIP CERAMIC B K 0.022μF/50V	12B3223C
C964	CHIP CERAMIC F Z 0.22μF/25V	12F2224C
C966	ELECTROLYTIC 4.7μF/35V M	126E475S
C967	CHIP CERAMIC SL J 390PF/50V	1270391C
C968	CHIP CERAMIC B K 0.0033μF/50V	12B3332C
C976	CHIP CERAMIC B K 0.0022μF/50V	12B3222C
C977	ELECTROLYTIC 820μF/16V M	122Z652
C978	ELECTROLYTIC 470μF/16V M	626C477
C979	MYLAR 0.015μF/50V J	1254153S
C980	ELECTROLYTIC 1μF/50V M	126F105S
C981	ELECTROLYTIC 2.2μF/50V M	126F225S
C982	MYLAR 0.015μF/50V J	1254153S
	DIODES	
D951	DIODE S1WB60	AS1WB60*****
D952	DIODE AU01A	AAU01AV0****
D953	DIODE 1SS146	A1SS146T77**
D954	DIODE 1SS254	A1SS254T77**
D956	DIODE 1SS254	A1SS254T77**
D959	ZENER DIODE MTZ5.6A	AMTZ5R6AT77*
D960	ZENER DIODE MTZ22A	AMTZ22AT77**
D963	DIODE D5LCA20U	AD5LCA20U***
D964	DIODE 1SS254	A1SS254T77**
D965	DIODE 1SS254	A1SS254T77**
D966	ZENER DIODE MTZ5.1A	AMTZ5R1AT77*
D967	DIODE 1SS254	A1SS254T77**
D968	DIODE 1SS254	A1SS254T77**
	ICS	
IC951	IC FA5311S-TE1	GFA5311STE10
IC952	IC BA10358F-T1	GBA10358FT1*
	TRANSISTORS	
Q951	FET 2SK952	Q2SK952*****
Q953	2SB1140(S) or	Q2SB1140S***
	2SB1140(T)	Q2SB1140T***
Q954	2SD1207(S) or	Q2SD1207S***
	2SD1207(T)	Q2SD1207T***
QR951	BUILT-IN DTC114ES	C114ESZ
QR952	BUILT-IN DTC114ES	C114ESZ
	RESISTORS	
R562	CHIP 1/10W J 5.1KΩ	134F512C
R951	CARBON 1/2W J 330KΩ	1330968
R952	WOUNP 2W J 3.3Ω	RW023R3KA001
R953	CARBON 1/5W J 68KΩ	1324683T
R954	CARBON 1/5W J 68KΩ	1324683T
R955	CARBON 1/5W J 68KΩ	1324683T
R956⚠	METAL 2W J 47KΩ or	1330963
⚠	METAL 2W J 47KΩ	RN02473KA001
R957⚠	METAL 1W J 0.47Ω or	1330965
⚠	METAL 1W J 0.47Ω	RM01R47KA001
R958	CHIP 1/10W J 82Ω	134F820C
R960	CHIP 1/10W J 91Ω	134F910C
R964	CARBON 1/5W J 180Ω	1324181T
R965	CHIP 1/10W J 82Ω	134F820C
R969	CHIP 1/10W J 2.2KΩ	134F222C
R970	CHIP 1/10W J 100KΩ	134F104C
R971	CHIP 1/10W J 100Ω	134F101C
R972	CHIP 1/10W J 4.7KΩ	134F472C
R973	CHIP 1/10W J 4.7KΩ	134F472C
R974	CHIP 1/10W J 100KΩ	134F104C
R975	CHIP 1/10W G 9.1KΩ	134G912C
R976	CARBON 1/5W J 3.3KΩ	1324332T
R977	CARBON 1/5W G 7.5KΩ	1354752T
R978	CHIP 1/10W G 1KΩ	134G102C
R979	CARBON 1/5W J 4.7KΩ	1324472T
R980	CHIP 1/10W J 1KΩ	134F102C
R981	CARBON 1/5W J 12KΩ	1324123T
R982	CARBON 1/5W J 1KΩ	1324102T
R983	METAL 1W J 120Ω	RN01121KA001
R984	CARBON 1/5W J 1KΩ	1324102T
R985	CHIP 1/10W J 68Ω	134F680C
R986	CARBON 1/2W J 150Ω or	1330967
⚠	METAL 1/2W J 150Ω	RNX2151KA001
R1000⚠	METALLIZED FILM 1W J 0.1Ω or	1330966
⚠	METAL 1W J 0.1Ω	RM010R1KA001
	MISCELLANEOUS	
F951	FUSE T1.25A/250V	1790482
L951	LINE FILTER, 33MH ELF-18D290HN	1813569
L952	CHOKE COIL, 10UH RCH-895 100M	LLBD***SF001
PH951	PHOTO CUPPLAR TLP634(GB-LF2) or	GTLP634GBLF2
	PHOTO COUPLER PC-111	1813254
T951⚠	SWITCHING TRANS TS7413-1	LTT24EPMS001
VR951	P.O.T. 1KOHM B	138J777
VR952	P.O.T. 5KOHM B	138J780
W9	JUMPER WIRE 5P	WX3005J63310
	AC CORD	WAE0182KD001
	SHEET	0VM402813
	SHEET; HEATSINK; B	0VM402939
	HOLDER, FUSE	1790424

AC CHARGER B PCB ASSEMBLY

Ref.No.	Description	PartNo.
	CAPACITORS	
C985	CHIP CERAMIC F Z 0.022μF/25V or	12F2223C
	CHIP CERAMIC F Z 0.022μF/50V	12F3223C
C986	ELECTROLYTIC 47μF/6.3V M H5	121R476S
C987	MYLAR 0.033μF/50V J	1254333S
C988	CHIP CERAMIC CH J 100PF/50V	12CH101C
C989	CHIP CERAMIC CH J 100PF/50V	12CH101C
C990	CHIP CERAMIC F Z 0.1μF/25V or	12F2104C
	CHIP CERAMIC F Z 0.1μF/50V	12F3104C
CF951	CERAMIC CSB1000J	YK105PMR001
	DIODES	
D971	DIODE 1SS254	A1SS254T77**
D972	SCHOTTKY DIODE RK34	ARK340000000
D973	LED SLR-33VR3F	ESLR33VR3F00
D974	LED SLR-33VR3F	ESLR33VR3F00
	ICS	
IC953	VOLTAGE REGULATOR IC AN78L05	AN78L05
IC954	IC(COMPARATER) BA10393F(T1)	GBA10393FT1*
IC955	MICROCONTROLLER 4BIT /BU5156F-T1	GC91000RM015
	TRANSISTORS	
Q956	CHIP 2SA1576(R) or	QSA1576T106R
	CHIP 2SA1576(S)	QSA1576T106S
QR953	CHIP RES. BUILT-IN DTA124EU or	QTA124EUT106
	CHIP RES. BUILT-IN UN5112(TX)	QUN5112TX000
QR954	CHIP RES. BUILT-IN DTC124EU or	QTC124EUT106
	CHIP RES. BUILT-IN UN5212(TX)	QUN5212TX000
	RESISTORS	
R987	CHIP 1/10W J 0Ω	134F000C
R988	CHIP 1/10W J 10KΩ	134F103C
R989	CHIP 1/10W J 10KΩ	134F103C
R990	CHIP 1/10W J 6.8KΩ	134F682C
R991	CHIP 1/10W J 10KΩ	134F103C
R992	CHIP 1/10W J 1KΩ	134F102C
R993	CHIP 1/10W J 36KΩ	134F363C
R994	CHIP 1/10W J 12KΩ	134F123C
R995	CHIP 1/10W J 2.2KΩ	134F222C
R996	CHIP 1/10W J 10KΩ	134F103C
R997	CHIP 1/10W J 160KΩ	134F164C
R998	CARBON 1/5W J 1.8KΩ	1324182T
R999	CARBON 1/5W J 220Ω	1324221T
	MISCELLANEOUS	
JK951	DC JACK STJ-06	JYDJEE0SR001
SW951	MICRO SWITCH MQS-53-5F	SSP0102KB002
	TERMINAL, AC	0VM402812

SCHEMATIC DIAGRAM(CHARGER)

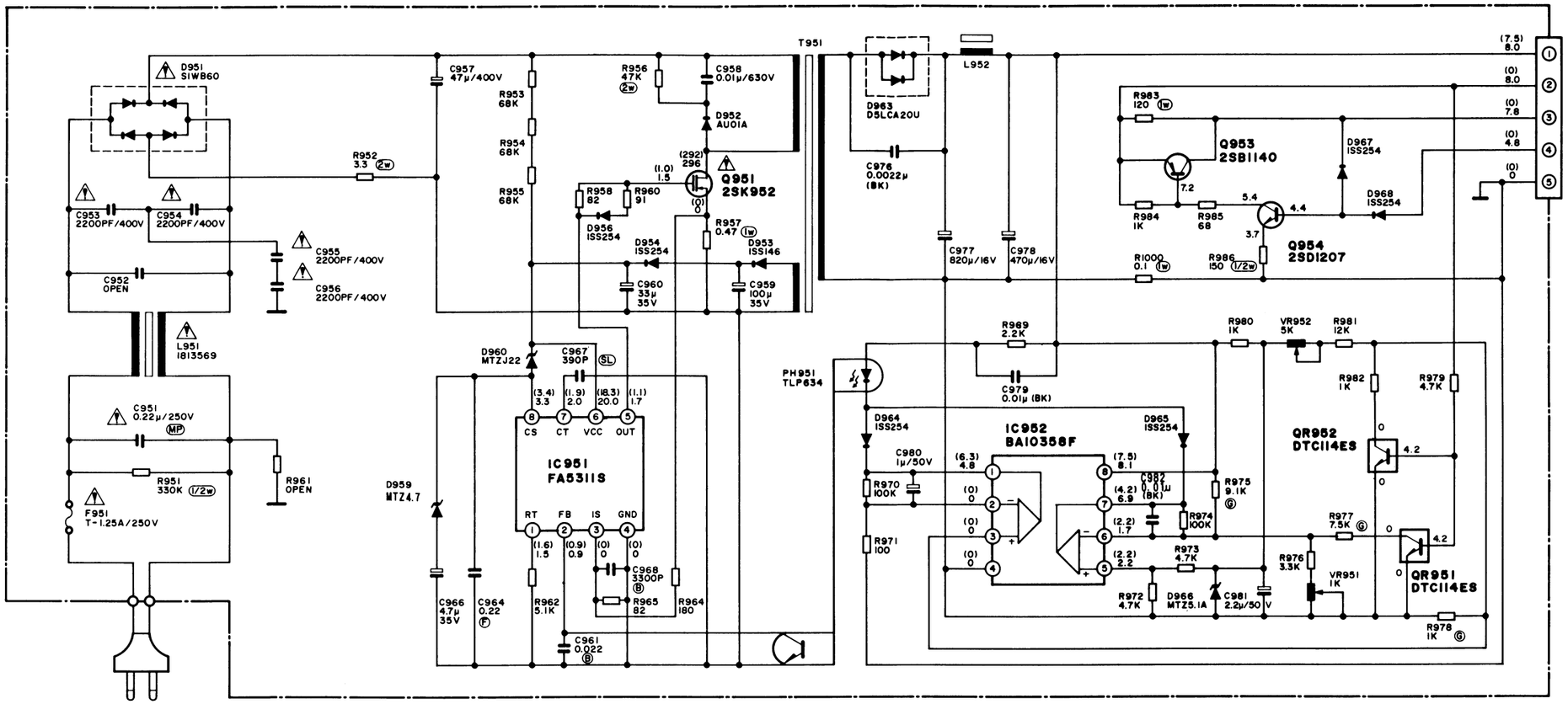

AC 220V
ADAPTOR MODE ····· ( )
BATTERY CHARGE MODE

C1580EA
AC CHARGER

BLOCK DIAGRAM

MAIN BLOCK DIAGRAM

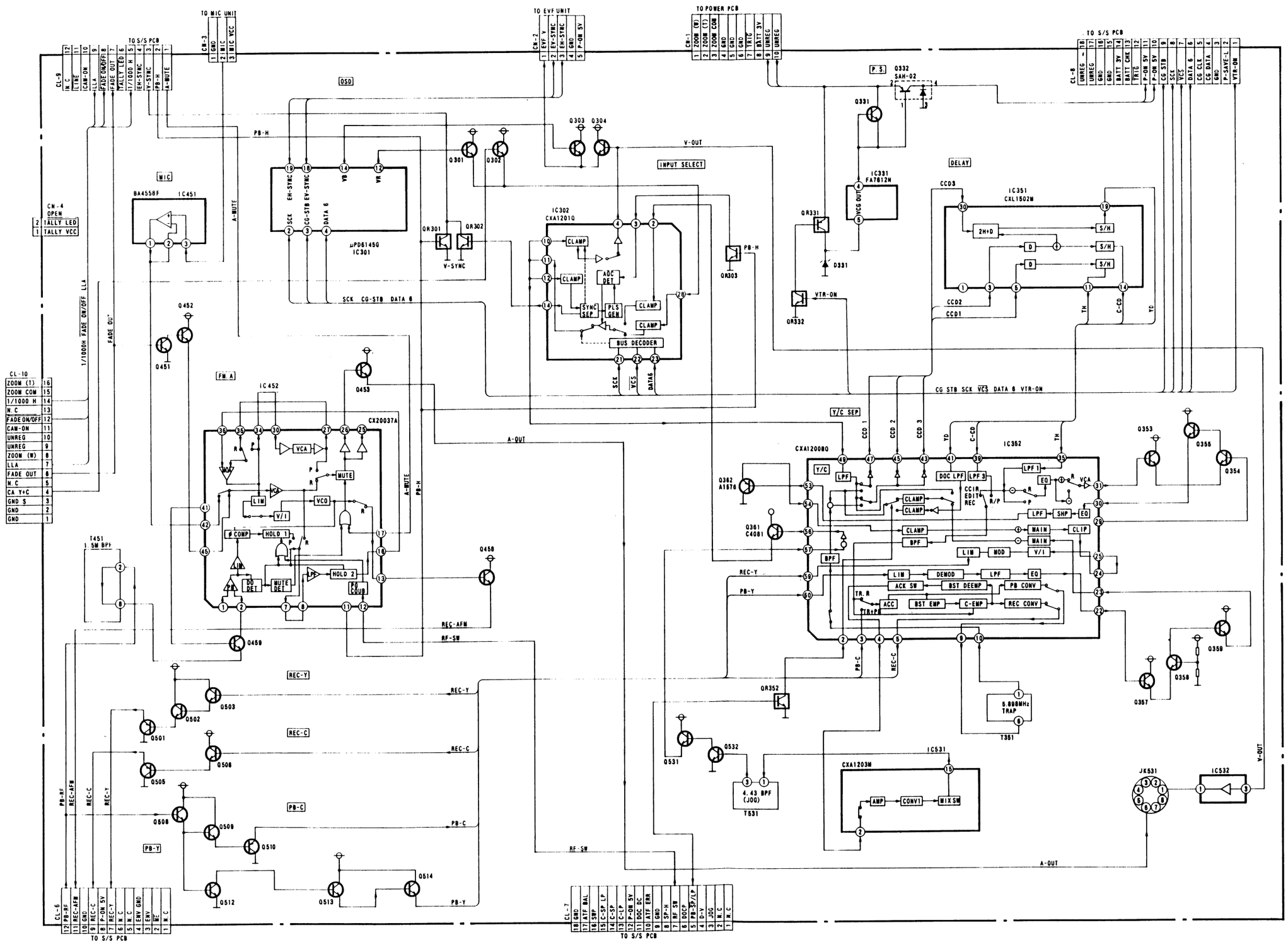

CCD BLOCK DIAGRAM

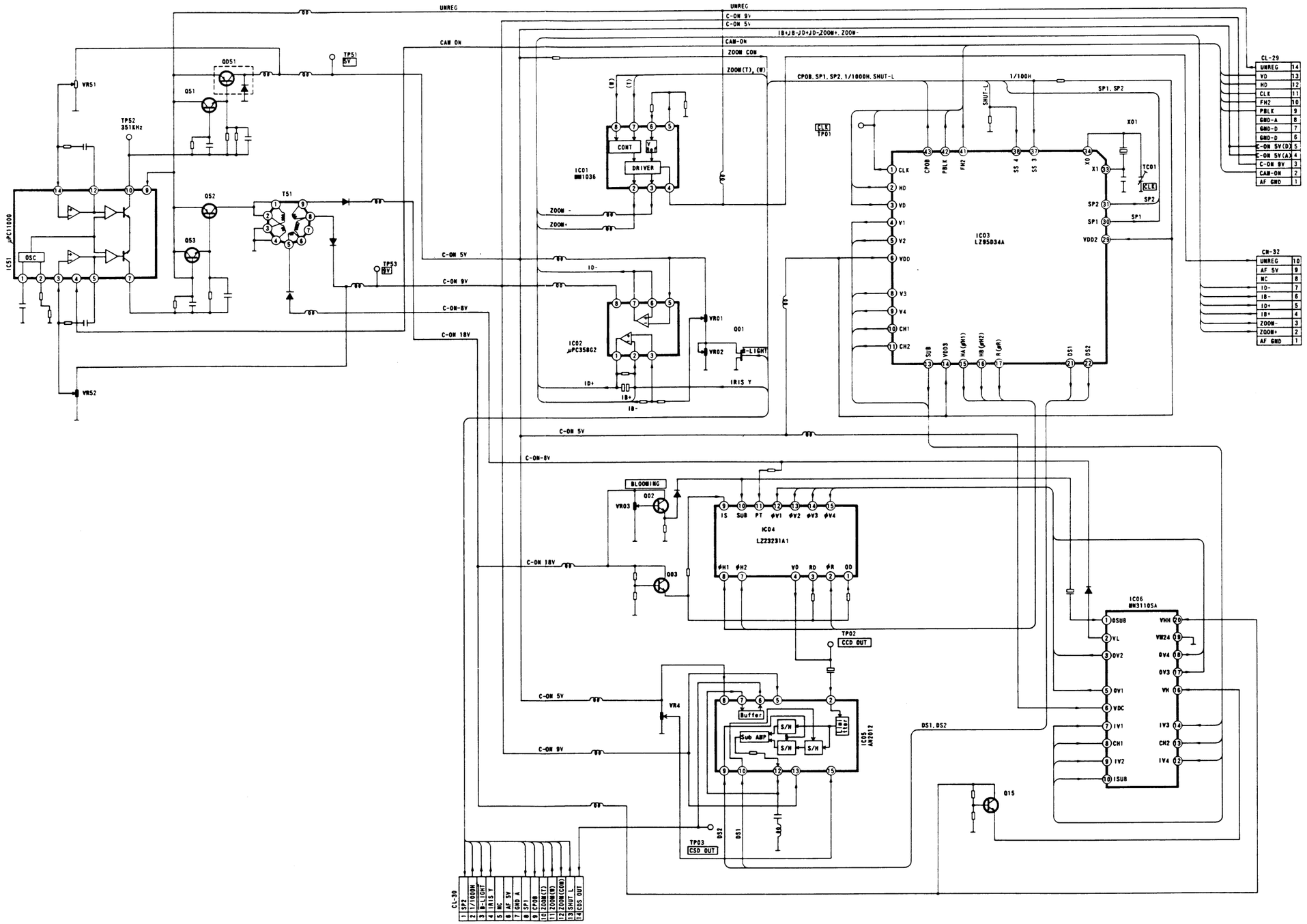

PROCESS BLOCK DIAGRAM

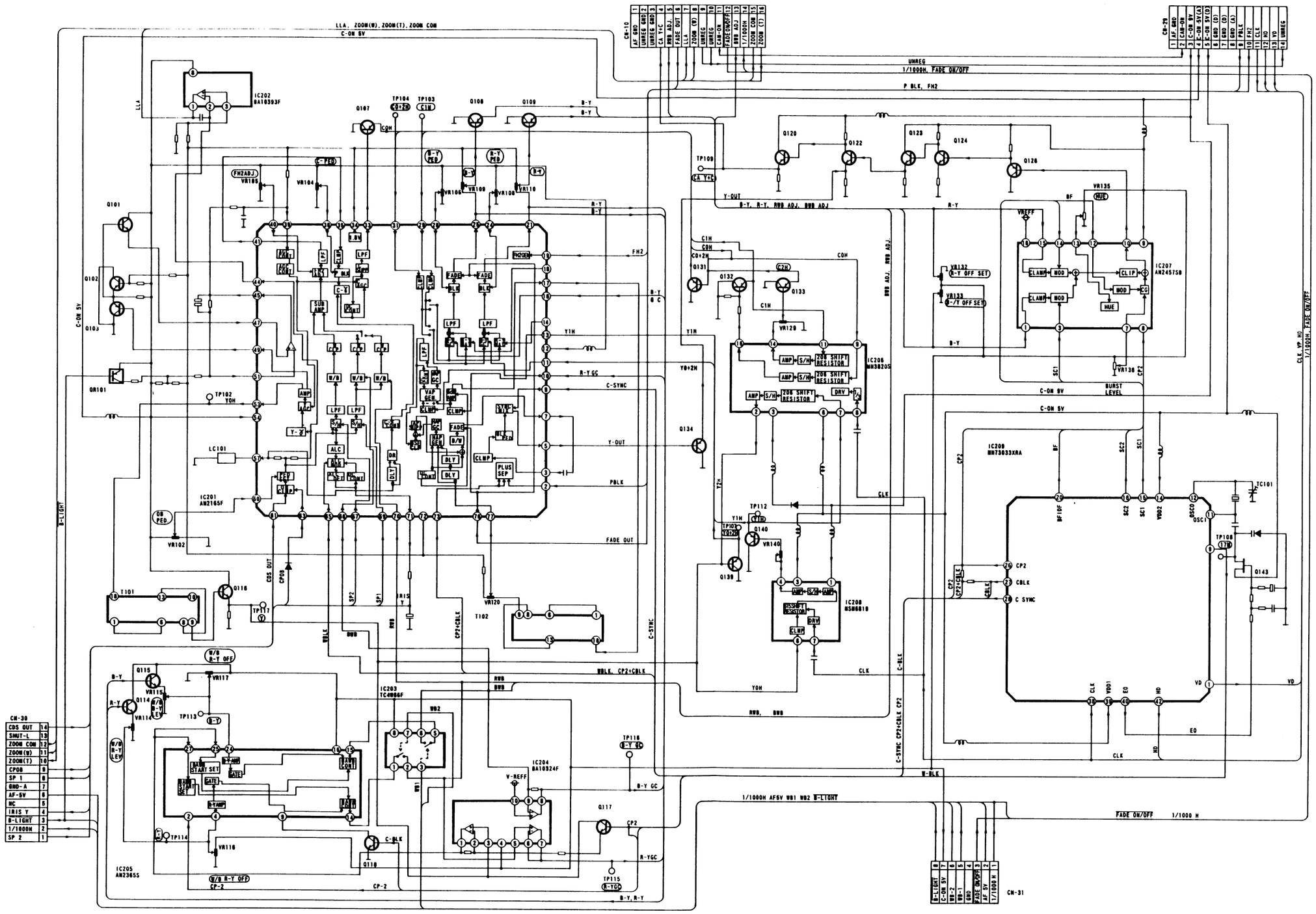

DRIVER BLOCK DIAGRAM

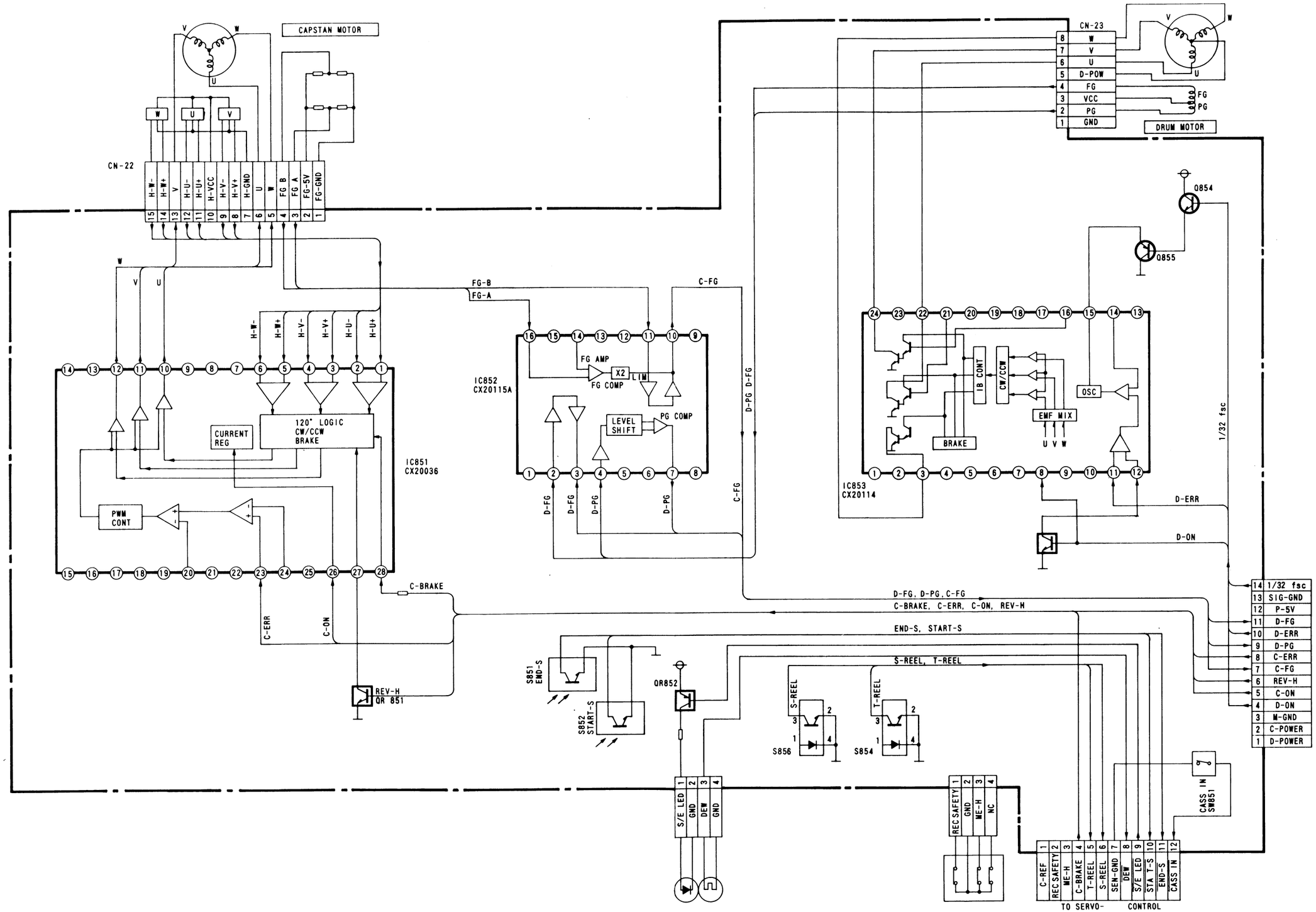

EVF SCHEMATIC DIAGRAM

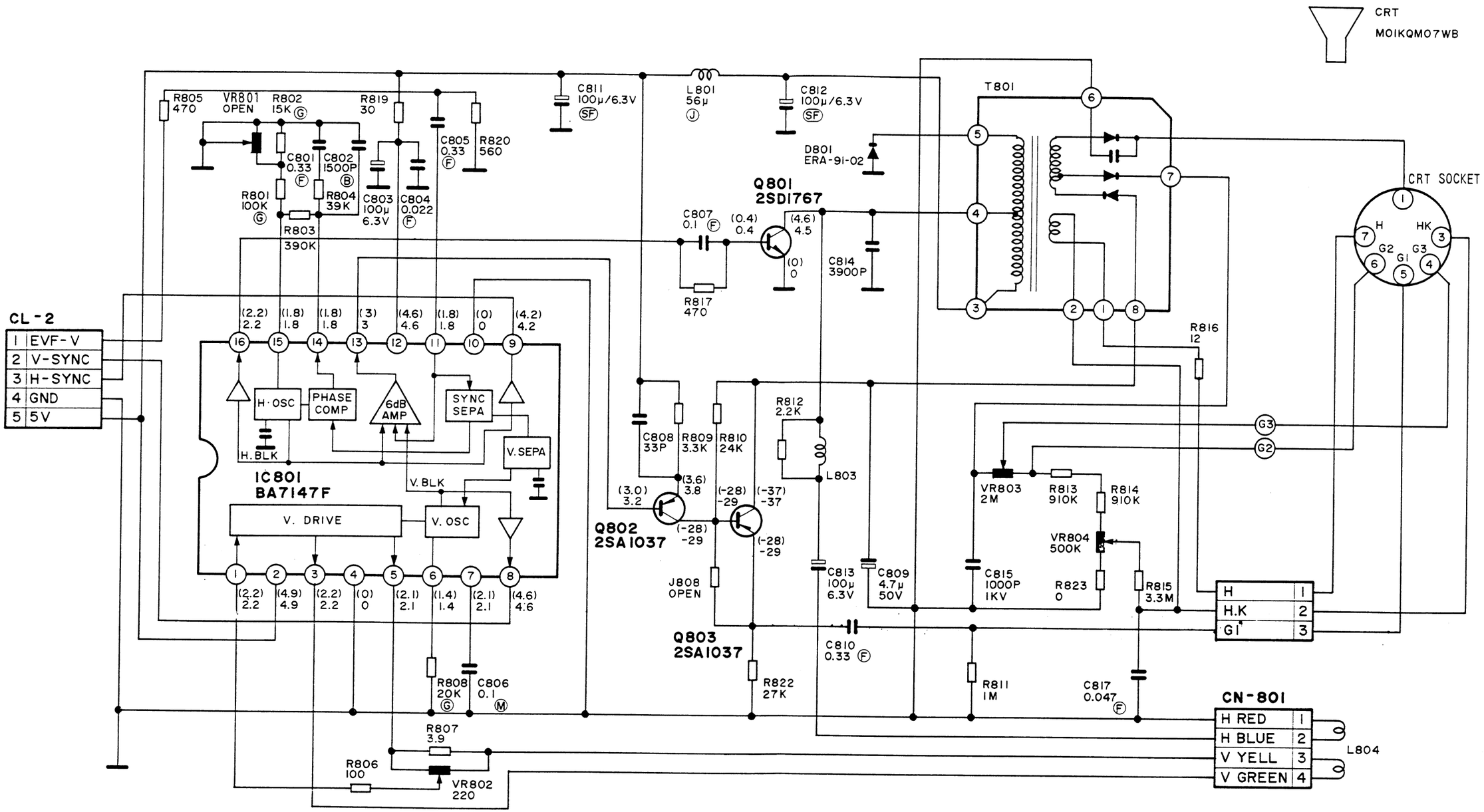

PB Mode ·····( )
REC Mode

C1580EA

SYSTEM CONTROL TIMING CHARTS

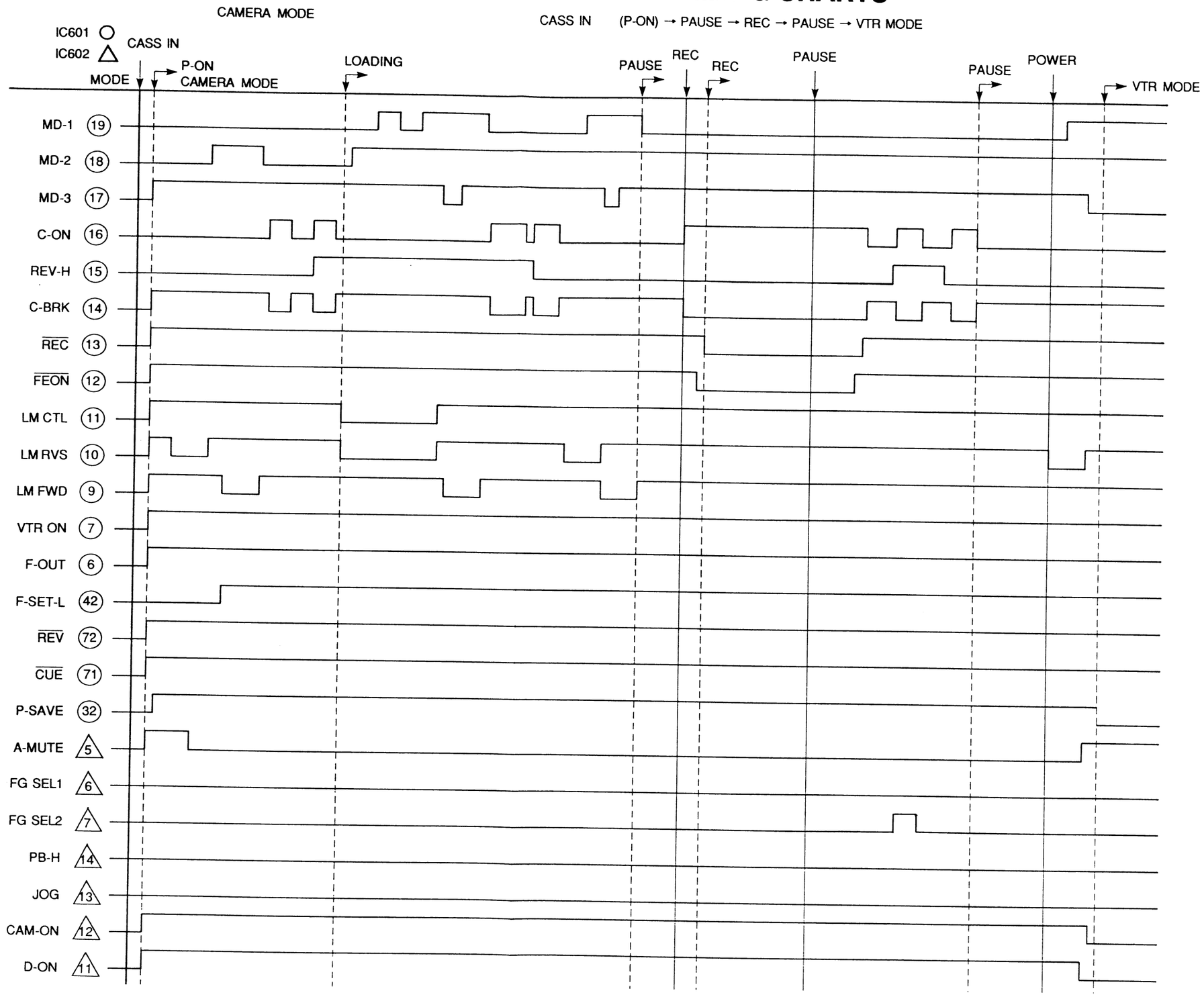

SERVO/SYSTEM CONTROL BLOCK DIAGRAM

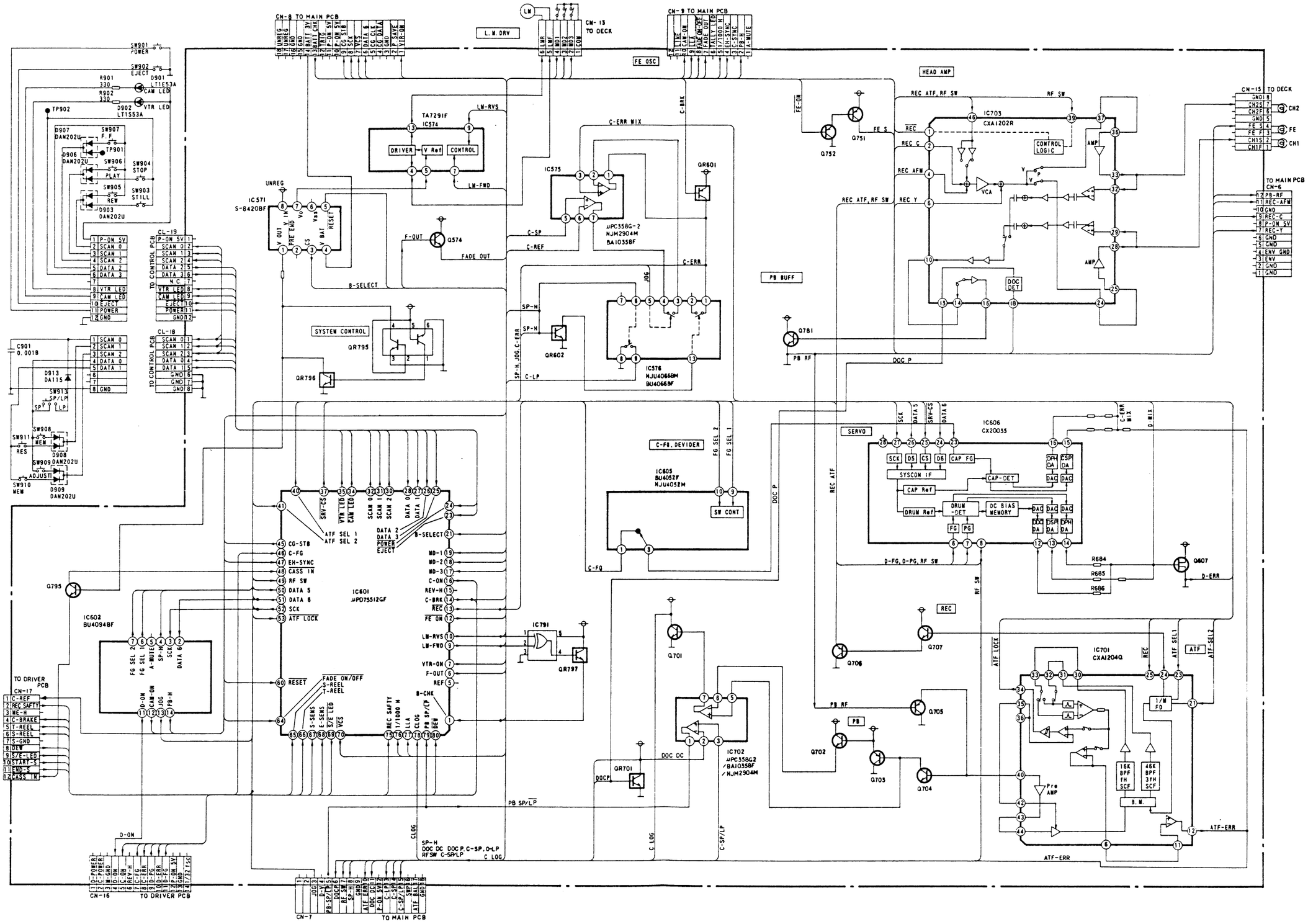

ALIGNMENT INSTRUCTIONS

WIRING FOR ALIGNMENT

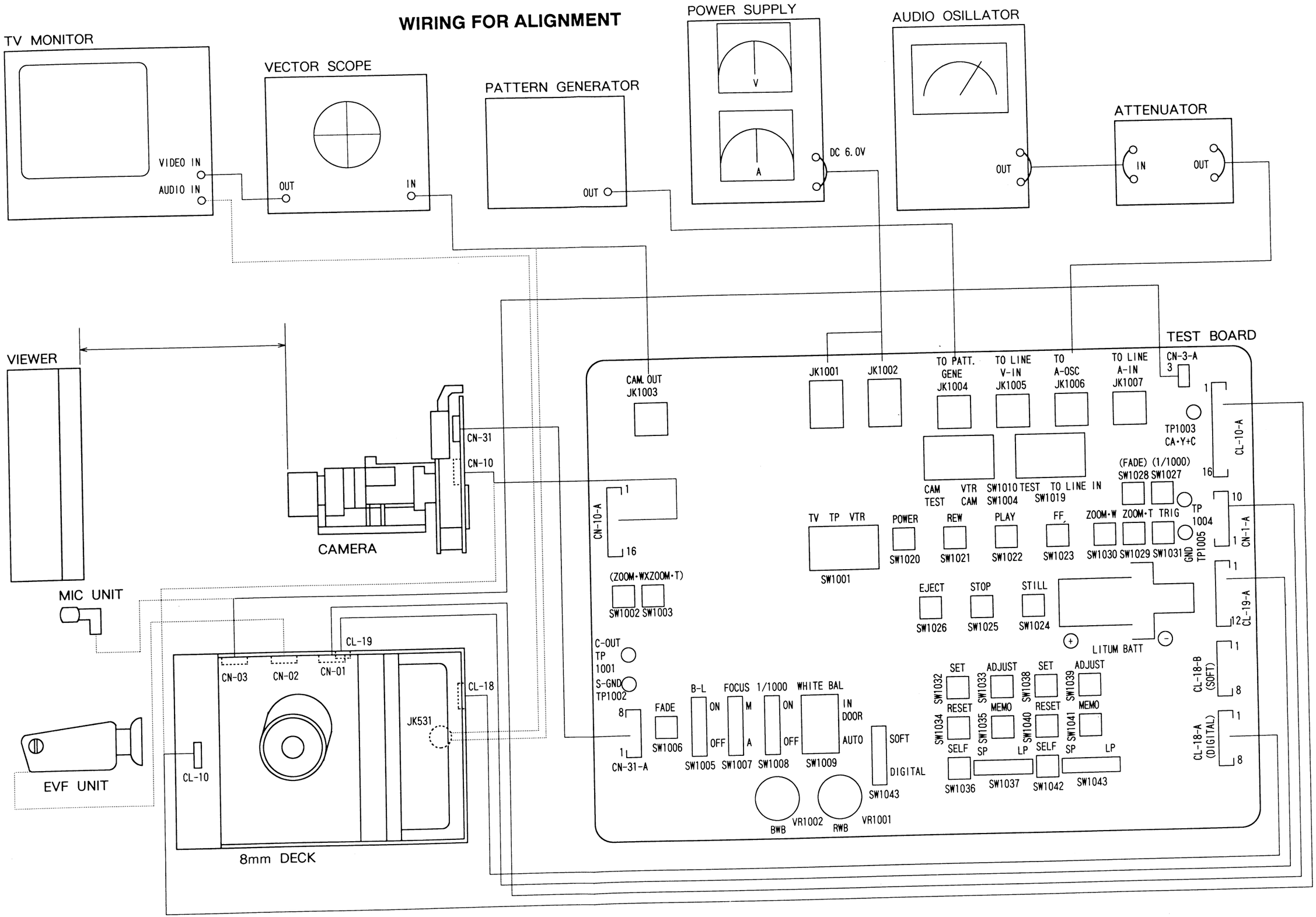

AC CHARGER SECTION

BLOCK DIAGRAM(CHARGER)

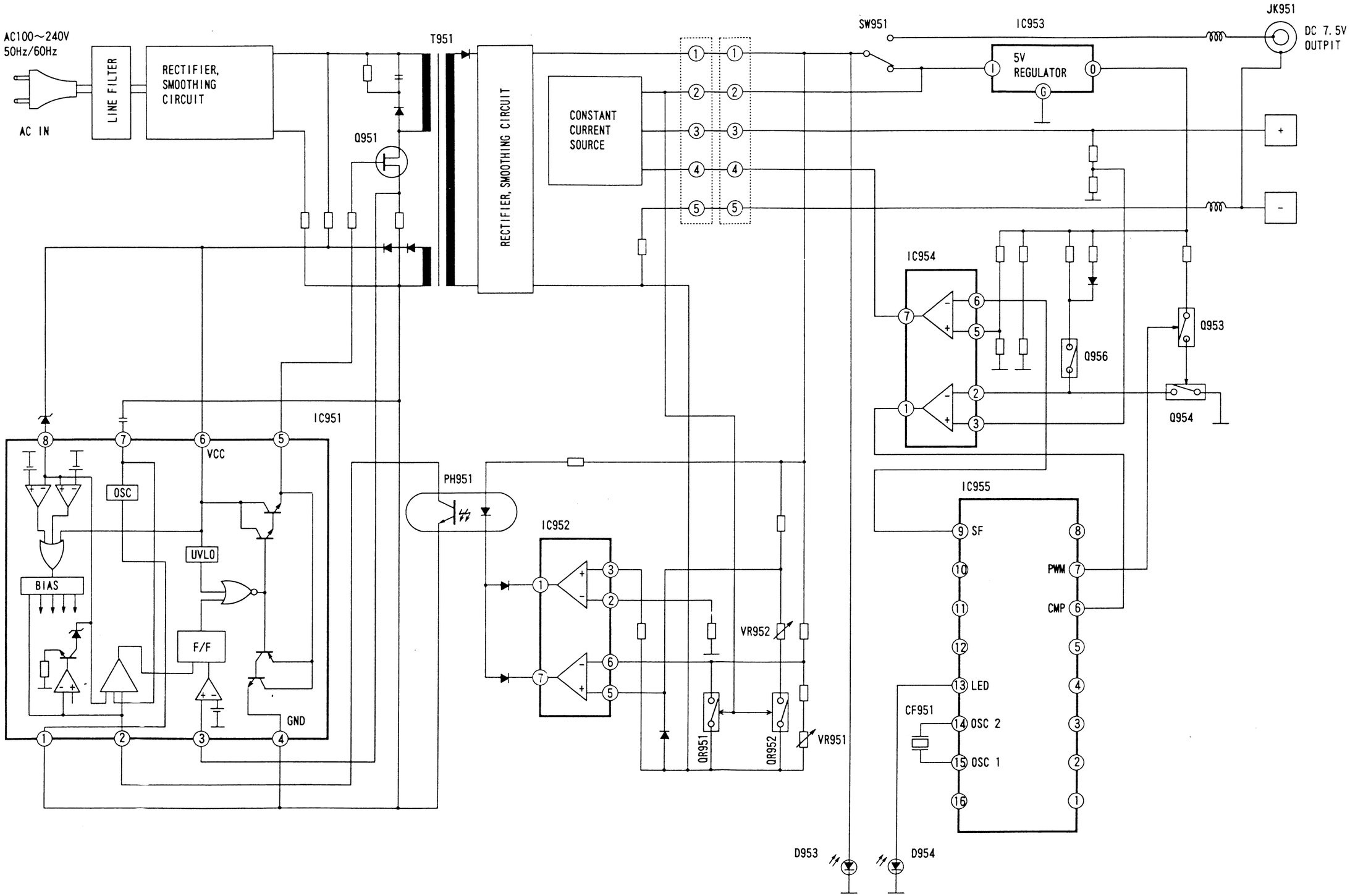

ELECTRICAL ADJUSTMENT INSTRUCTIONS(CHARGER)

Note:
All adjustment procedures must be proceeded in order of numberring.

1. Adaptor Output Voltage Adjustment

Test Point	Adj. Point	Mode	Input
JK951	VR951	ADAPTOR	AC100~240V
Tape	M. EQ.	Spec.	
---	LOAD RESISTOR DC VOLT METER	7.4V ±0.1V	
Connections of M. EQ.			

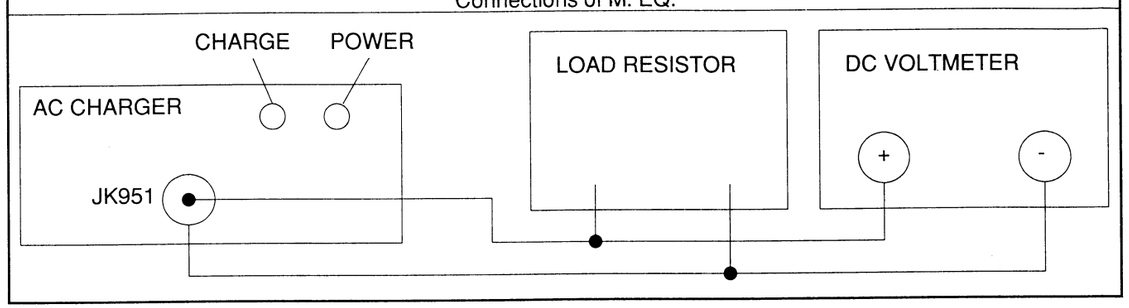

Reference notes:
1. Connect equipments as shown in the above table.
2. Connect the AC Charger to power source (AC 100V ~ AC 240V), confirm power LED is turn on.
3. Adjust the VR951 so that output voltage of JK951 becomes 7.4V ±0.1V.

2. Charge Mode Output Voltage Adjustment

Test Point	Adj. Point	Mode	Input
BATTERY TERMINAL	VR952	CHARGE	AC100~240V
Tape	M. EQ.	Spec.	
---	LOAD RESISTOR DC VOLT METER	7.4V ±0.1V	
Connections of M. EQ.			

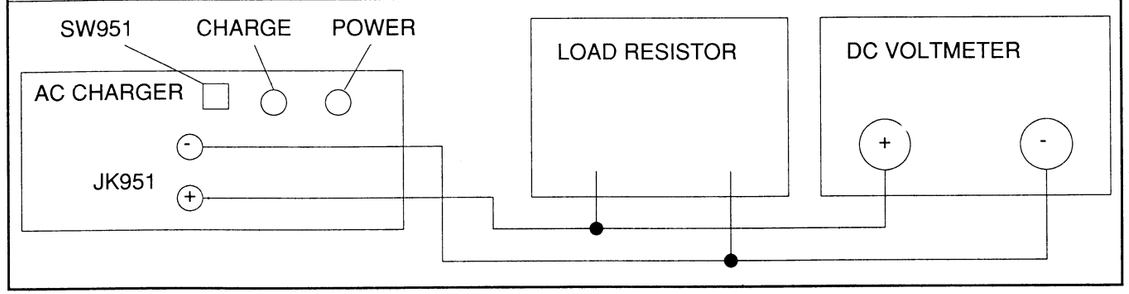

Reference notes:
1. Connect equipments as shown in the above table.
2. Connect the AC Charger to power source (AC 100V ~ 240V) and turn on the SW951.
3. Adjust VR952 so that output voltage of the battery becomes 7.4V ± 0.1V.

TEST BOARD SCHEMATIC DIAGRAM

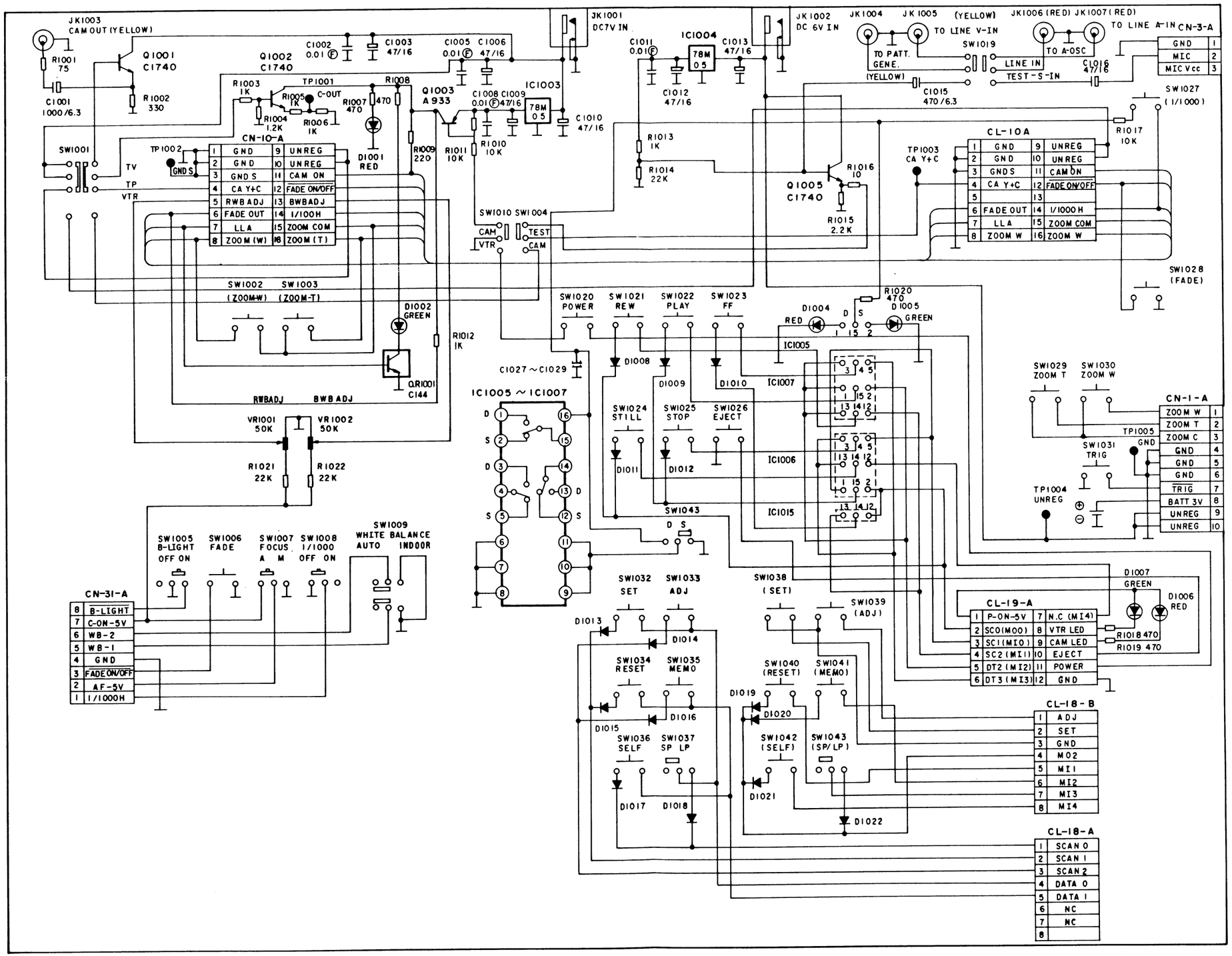

TEST EQUIPMENT AND TOOLS

1. Oscilloscope:
   - Dual Trace 40MHz 5mV/Div
   - 10:1 Probe
   - 1:1 Probe
2. Frequency Counter
3. Vectorscope
4. TV Monitor
5. DC Voltmeter
6. AC Voltmeter (R. M. S.)
7. Spectrum Analyzer
8. DC Power Supply
9. Pattern Generator (Color Bar Signal with 100% White)
10. Attenuator
11. Audio Oscillator
12. Viewer:
    - DNP standard color viewer model-V
    - Available Area 250 X 190 mm
    - Lamp-Toshiba FL 10W (W-PL-B X 4)
    - 3200 degrees K
13. Deflection Chart:
    - Gray Scale Chart
    - Color Bar Chart
14. Simenf Star Chart
15. Focus Adjustment Driver : -2 m/m
16. Alignment Tape (FM6A, FM6AL, FM6N, FM6EL, FM6M)
17. Test Board
18. A/V Cable
19. Load Resistor

HOW TO SET UP THE CAMERA MODE

1. Connect the TV Monitor through the Vectorscope to CAM OUT Jack (JK1003) on the Test Board.
2. Set the Viewer in front of the Camera.
3. Connect the DC Power supply (DC 7V ±0.1V) to DC Jack (JK1001) on the Test Board.
4. Connect the Camera connectors to the Test Board.
   Camera
   CN-10 ---> CN-10-A
   CN-31 ---> CN-31-A
5. Set switch positions as follows:

Switch No.	Switch Name	Select Position
SW1010	CAM / VTR	CAM
SW1004	TEST / CAM	TEST
SW1005	B-L	OFF
SW1007	FOCUS	M
SW1008	1/1000	OFF
SW1009	WHITE BAL	IN DOOR
SW1001	TV / TP / VTR	TV

CONTROL/POWER SCHEMATIC DIAGRAM

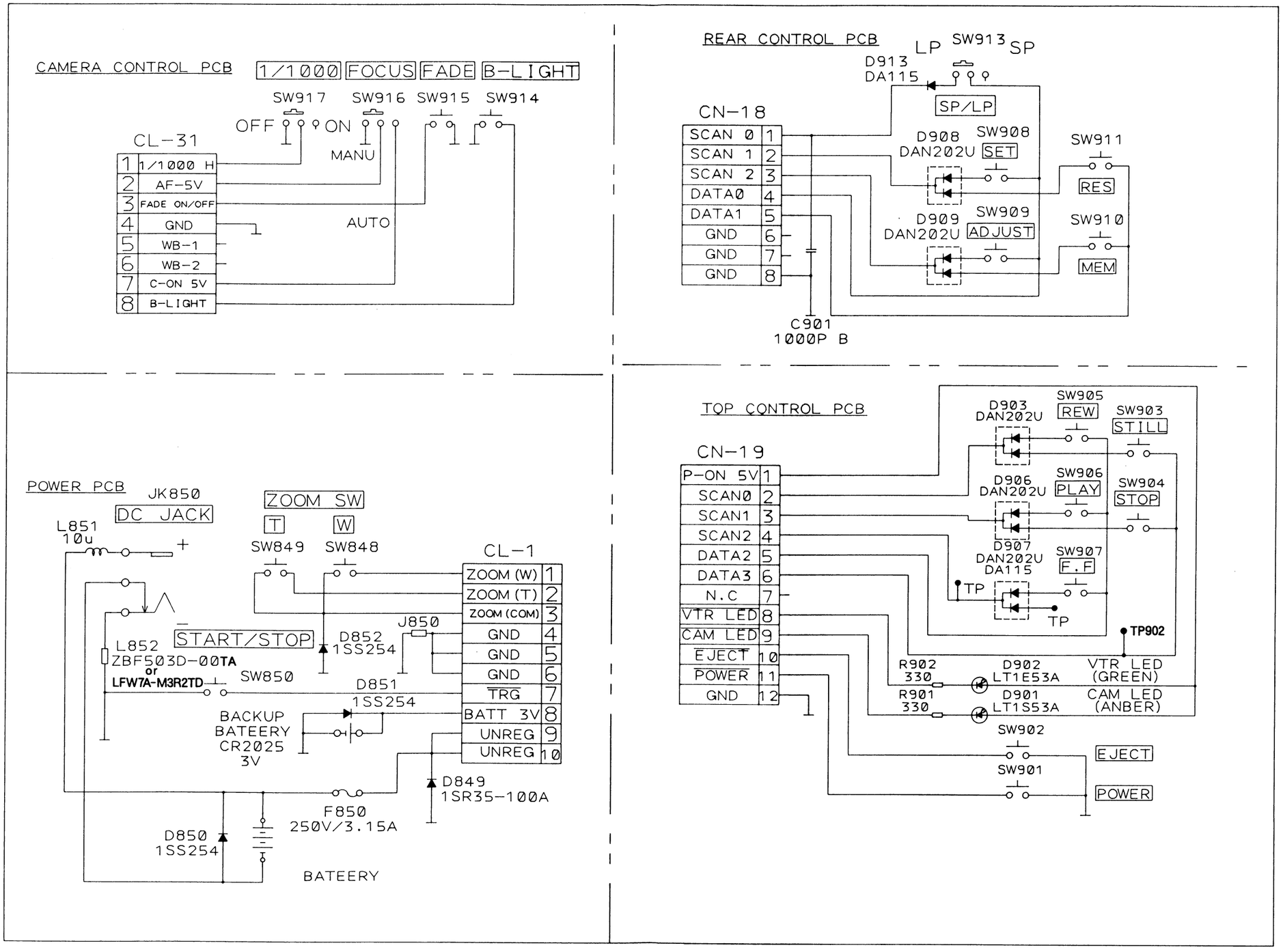

DRIVER SCHEMATIC DIAGRAM

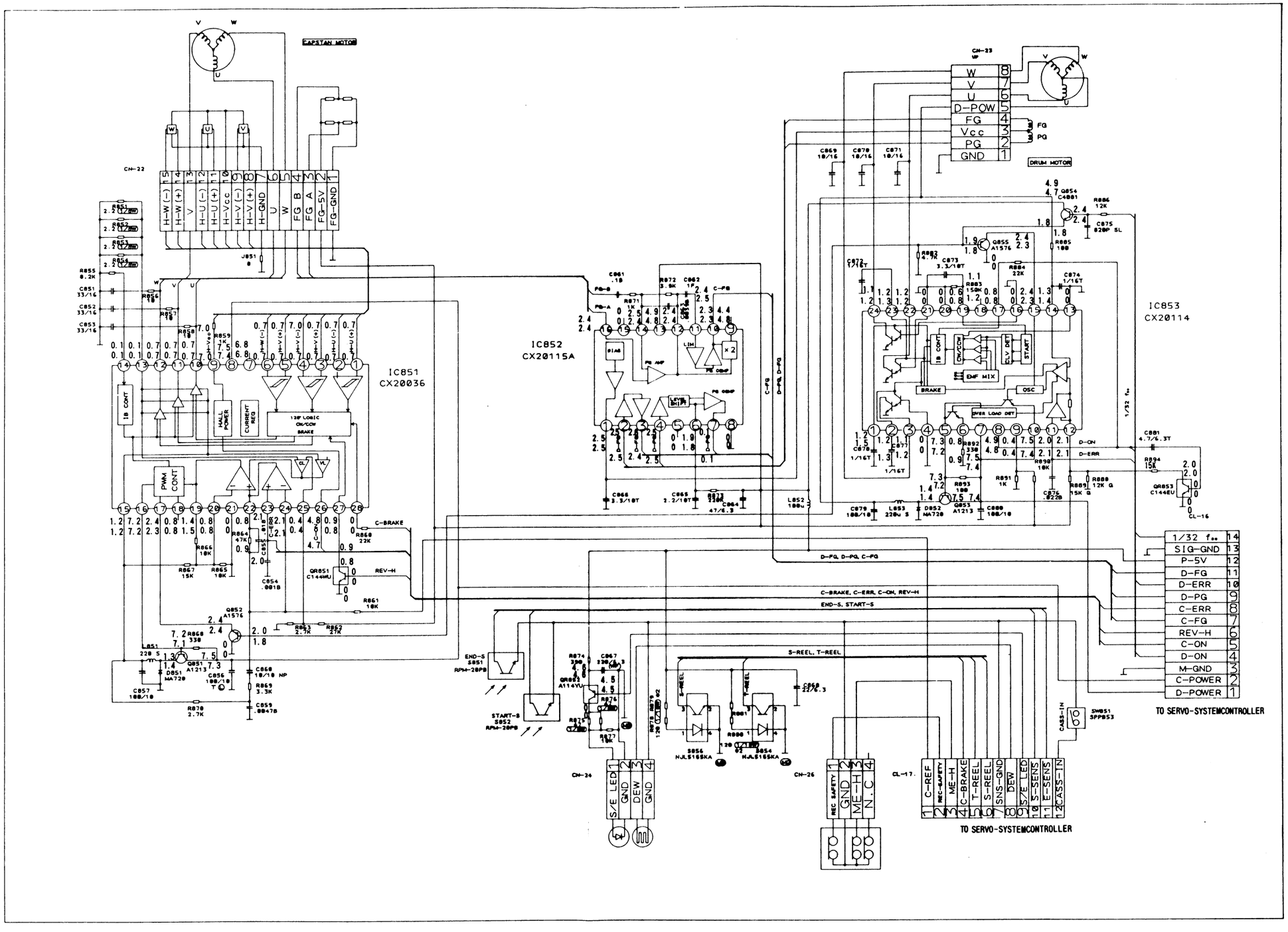

WIRING DIAGRAM

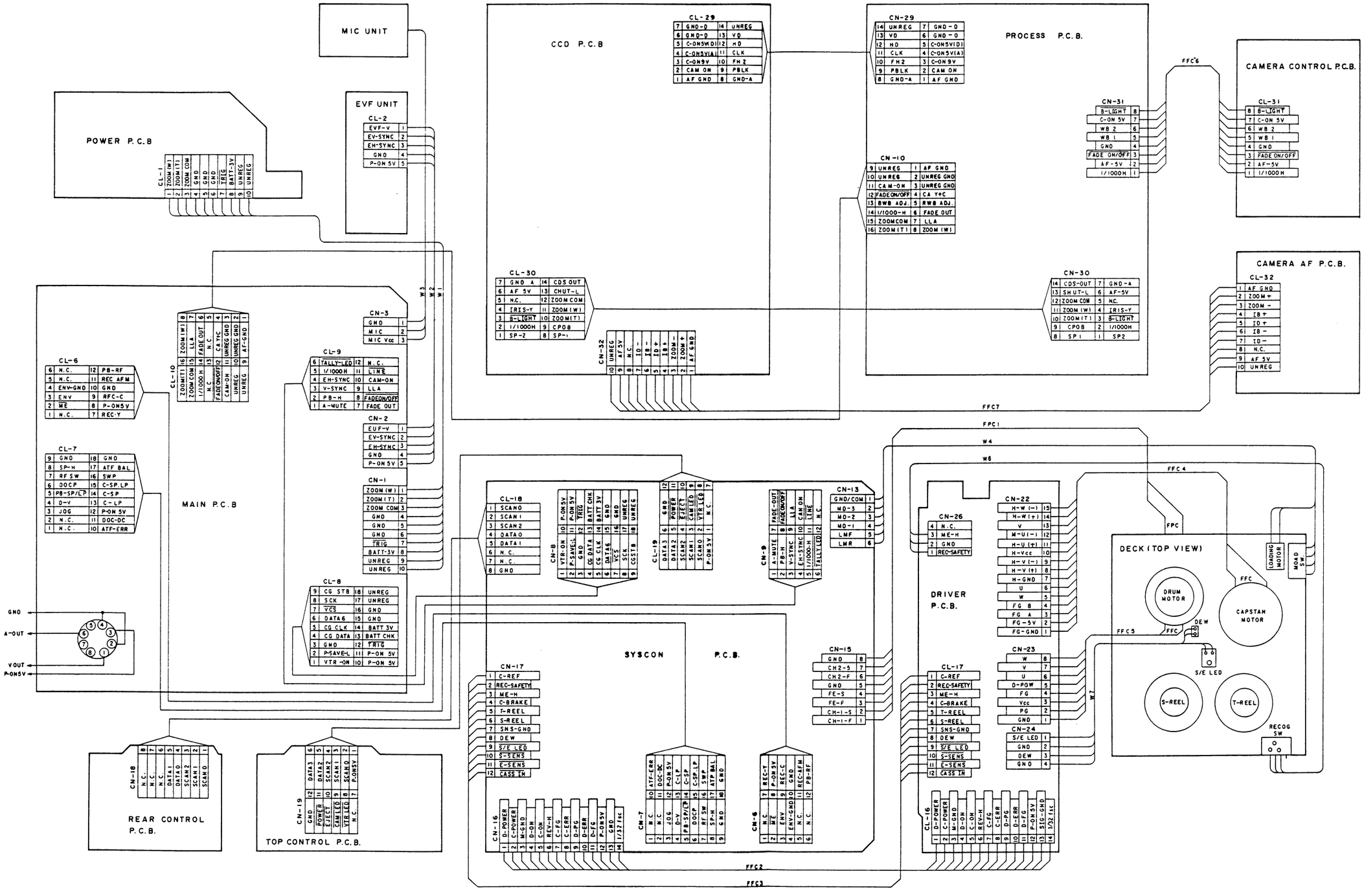

C1580WI

REPLACEMENT PARTS LIST/EXPLODED VIEW

EXPLODED VIEW(CAMERA)

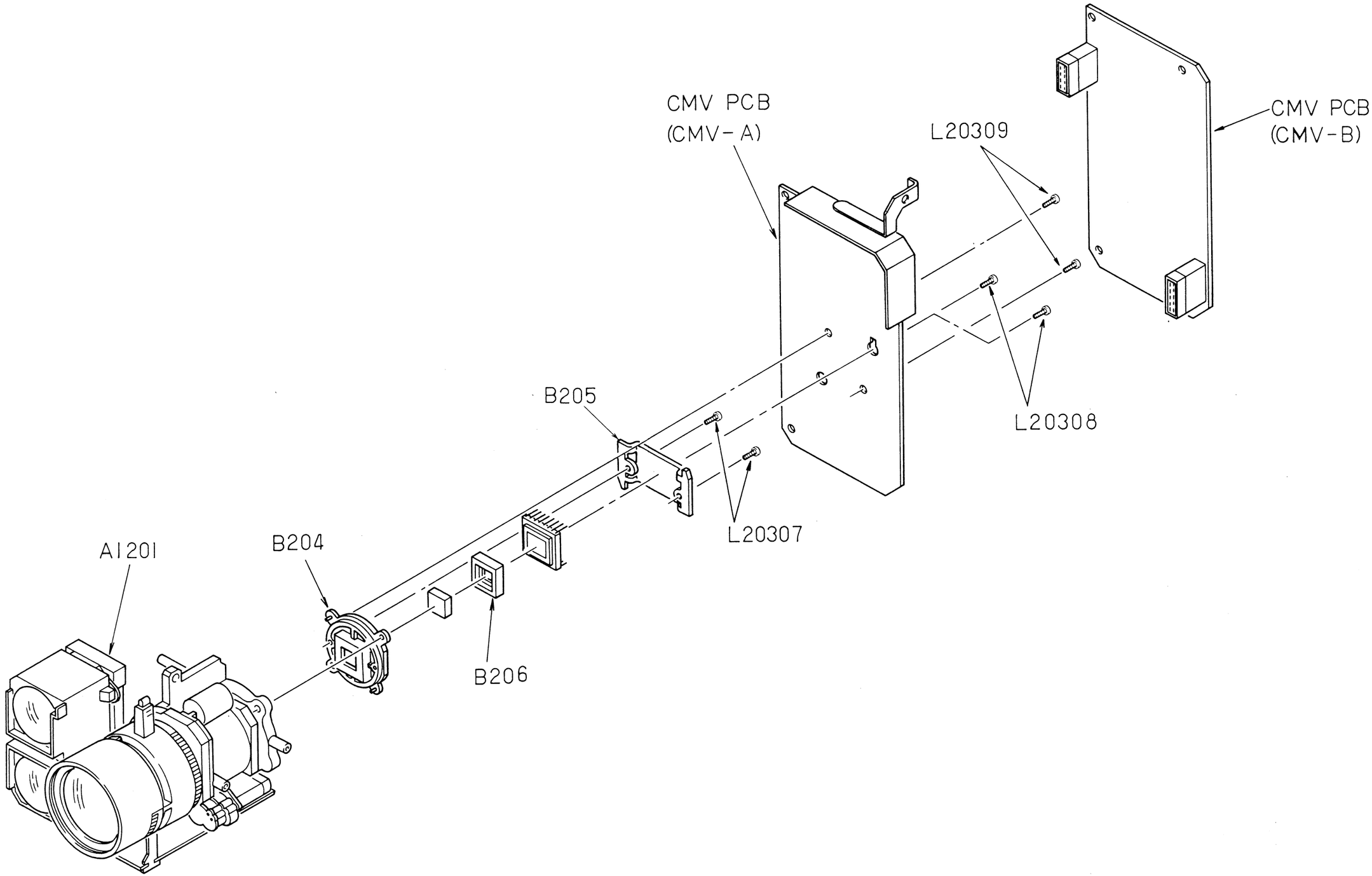

P.C.BOARD TOP/BOTTOM VIEW AND ALIGNMENT POINT

AC CHARGER PCB(TOP VIEW)

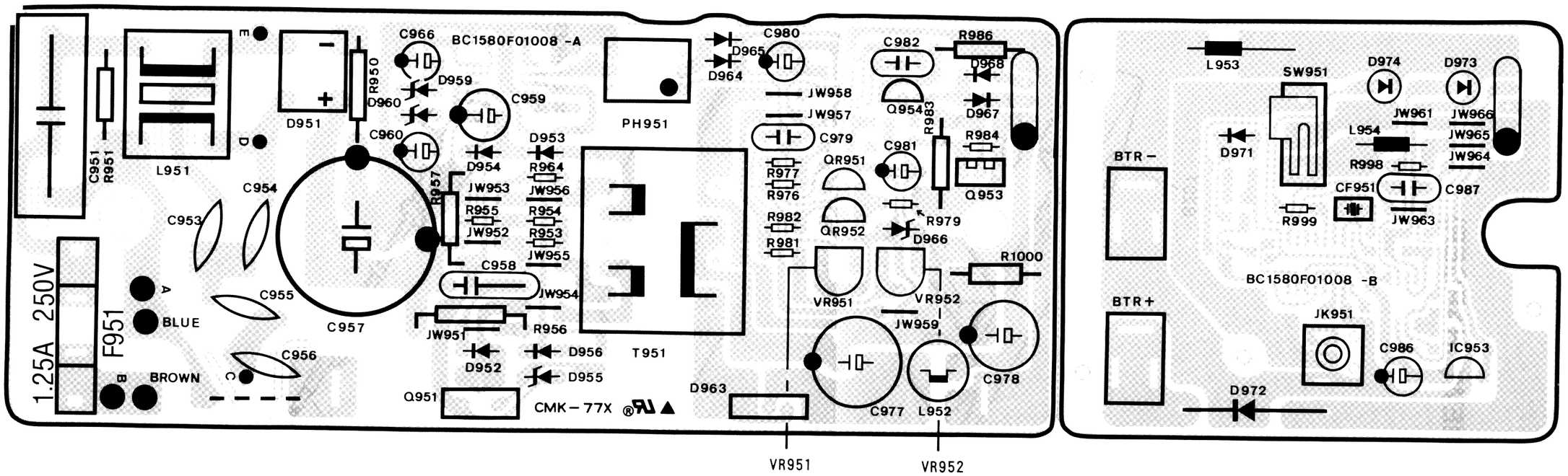

AC CHARGER PCB(BOTTOM VIEW)

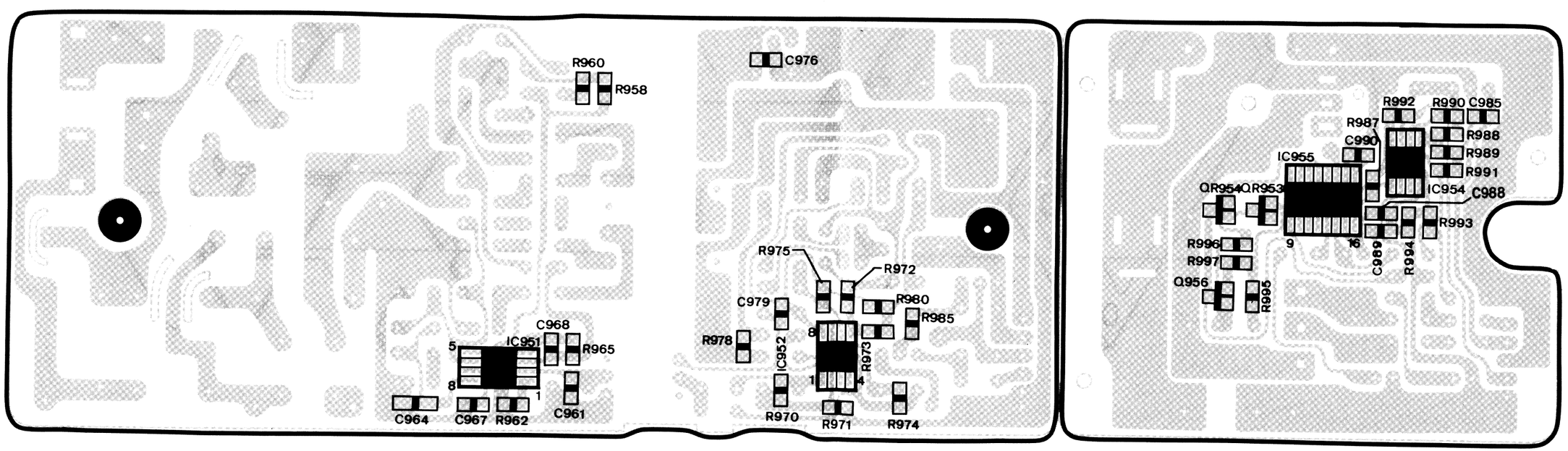

EXPLODED VIEW(CHARGER)

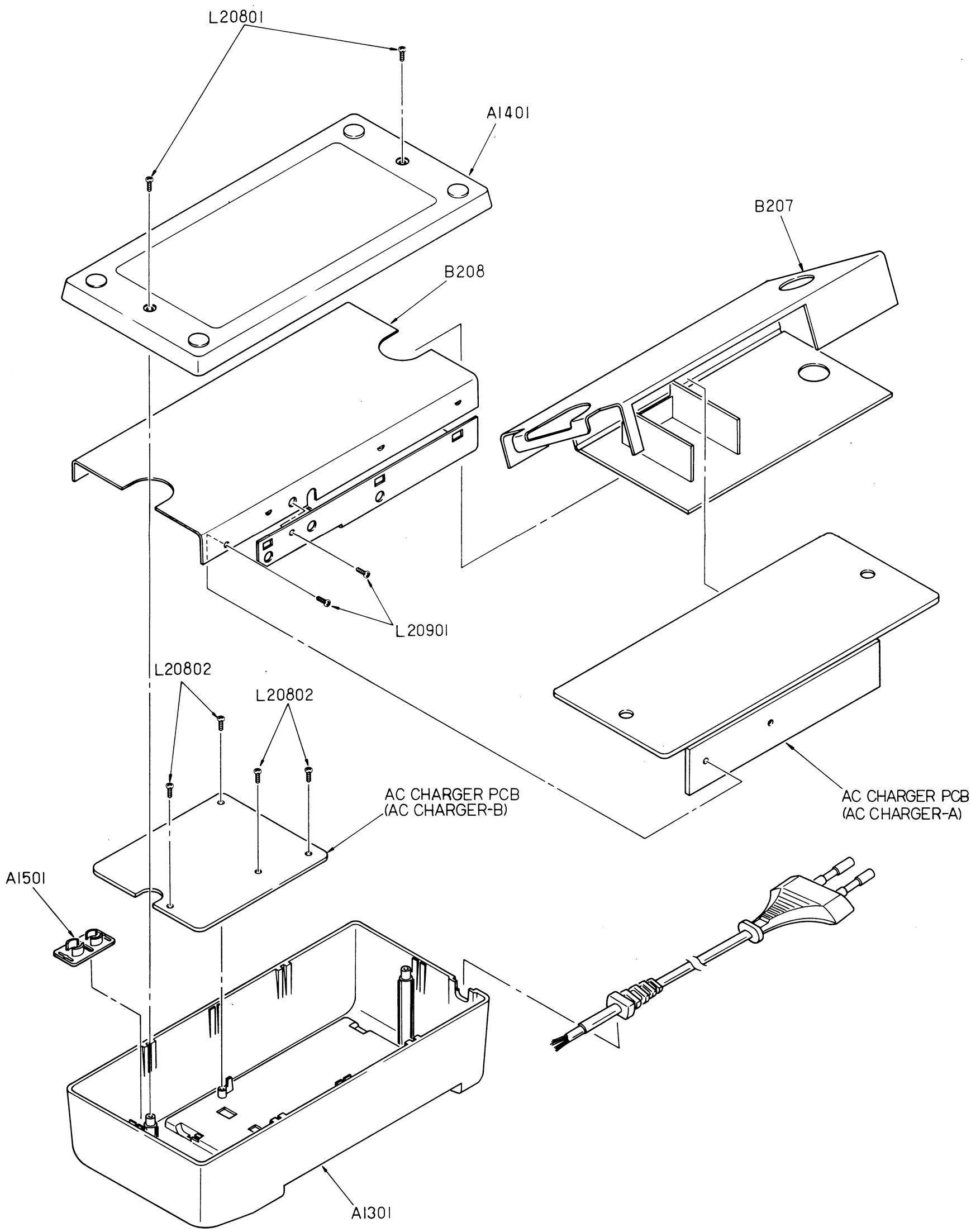

PROCESS PCB(TOP VIEW)

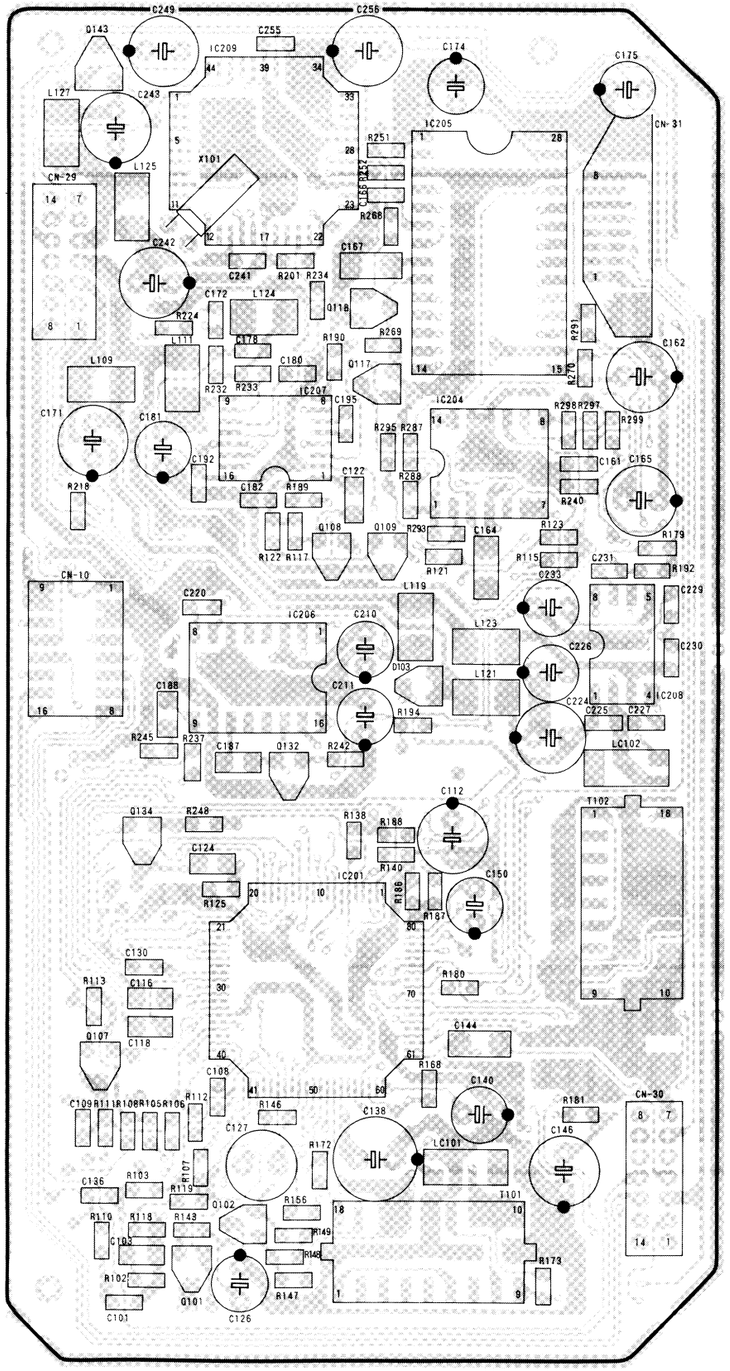

PROCESS PCB(BOTTOM VIEW)

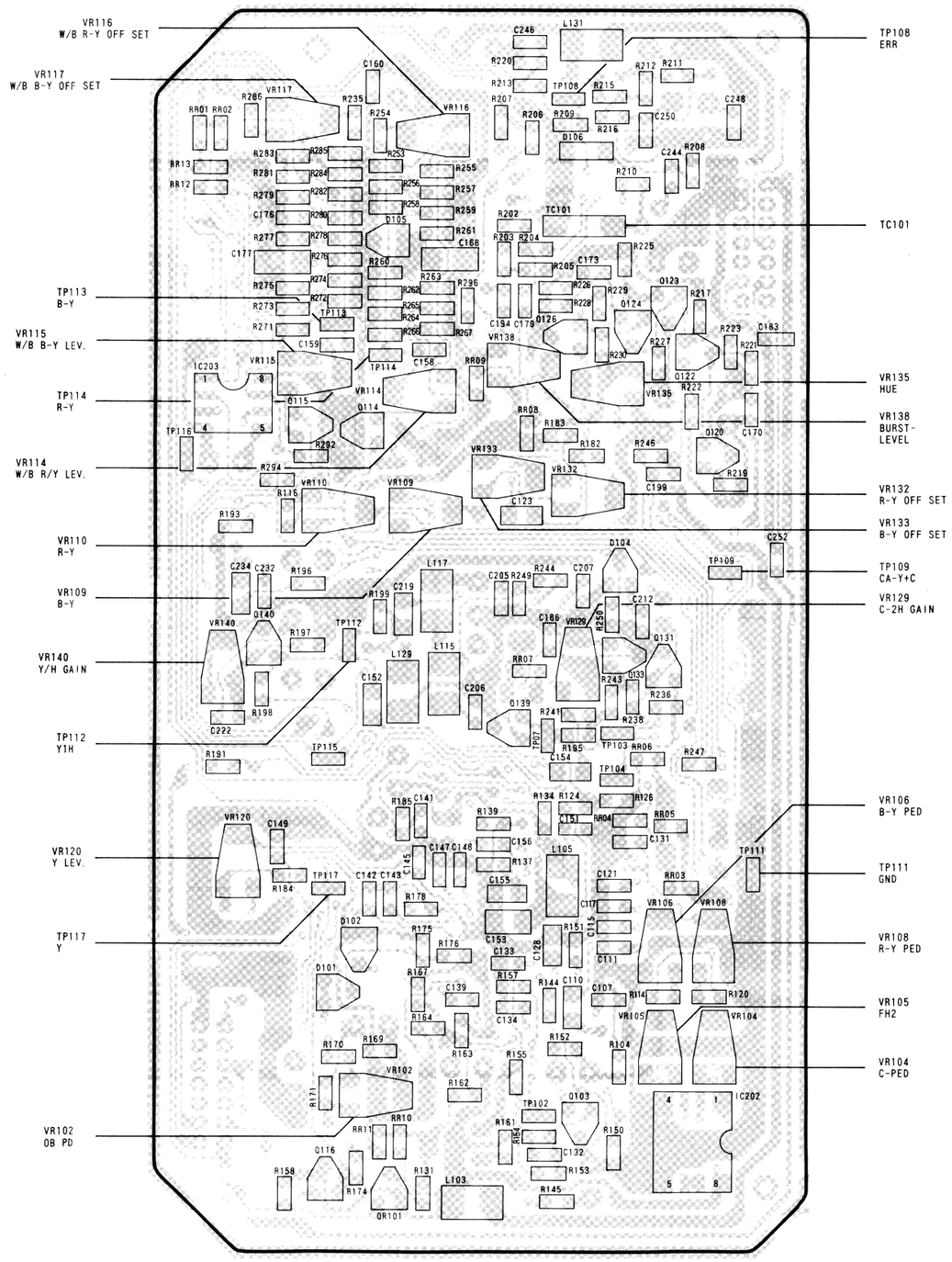

DRIVER PCB(TOP VIEW)

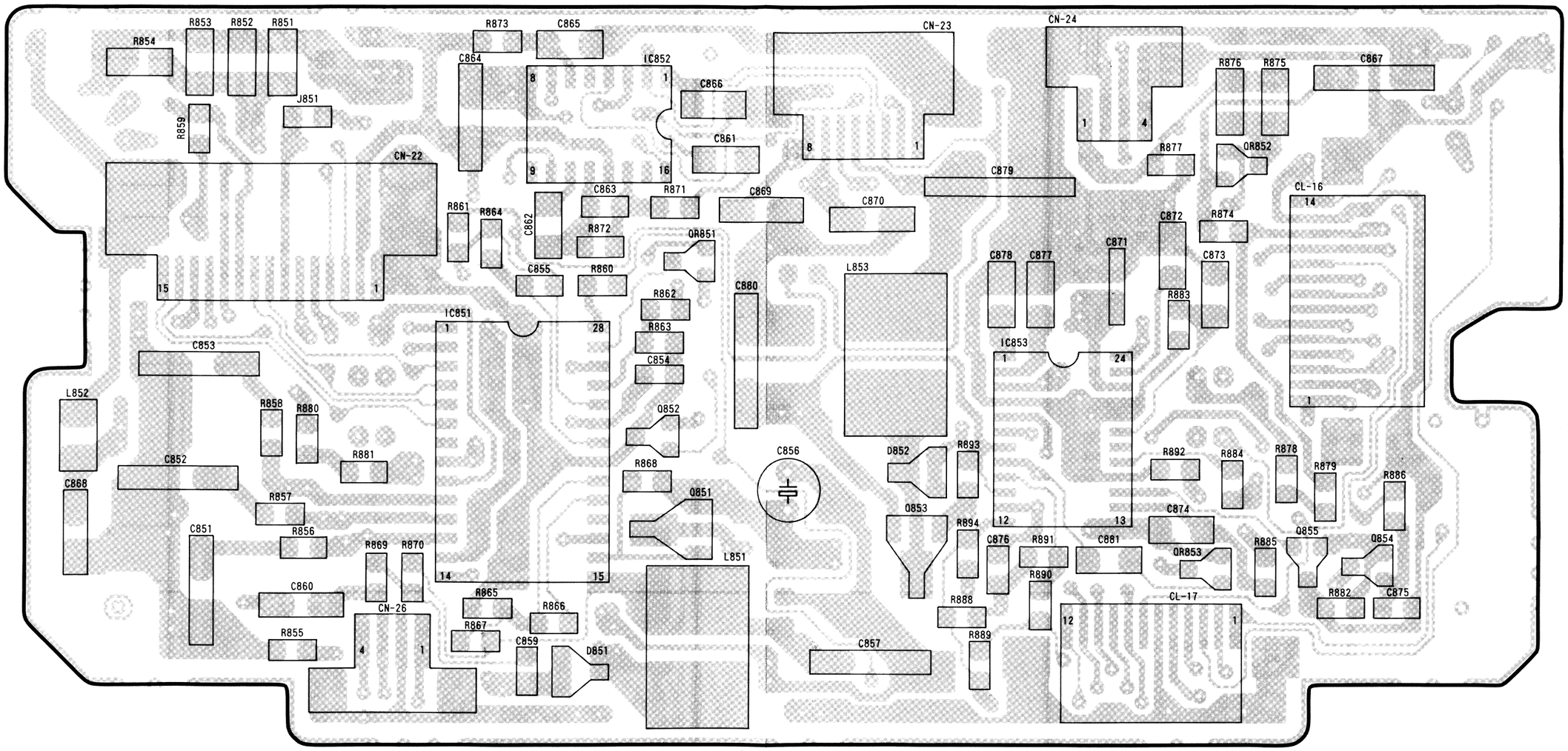

CCD PCB(TOP VIEW)

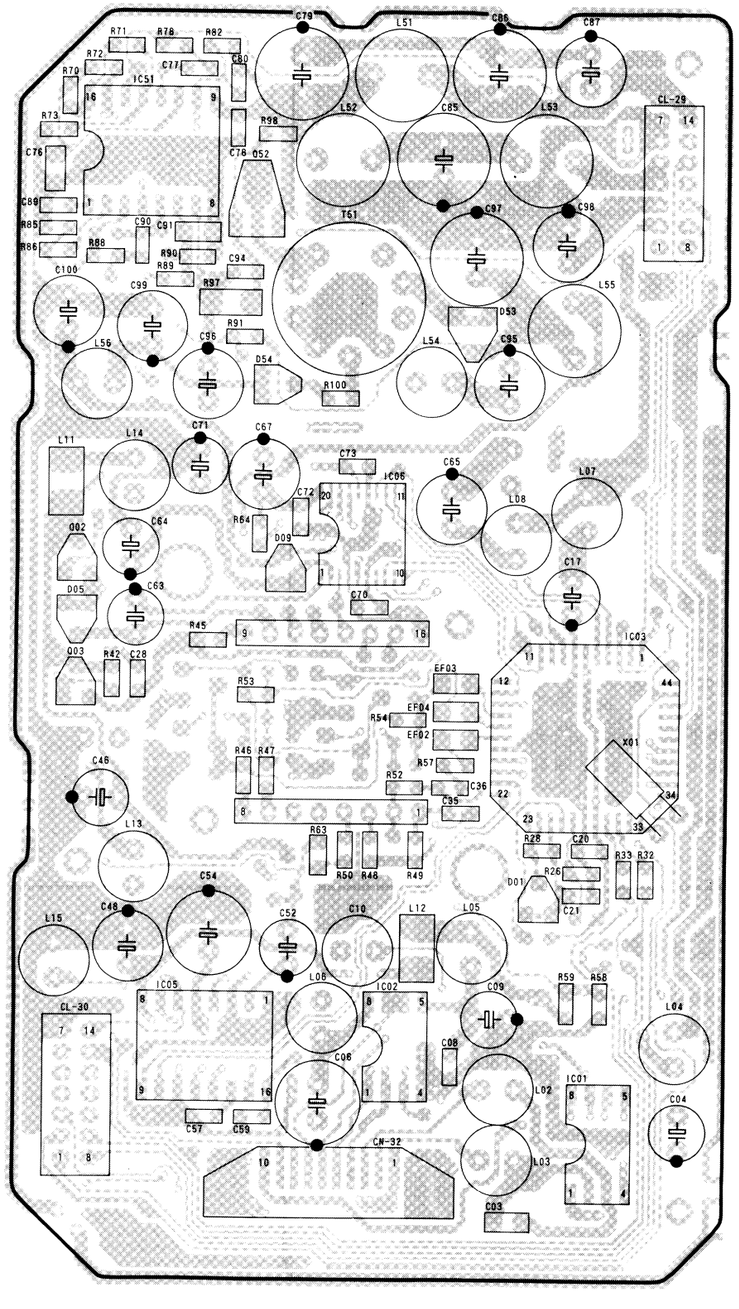

CCD PCB(BOTTOM VIEW)

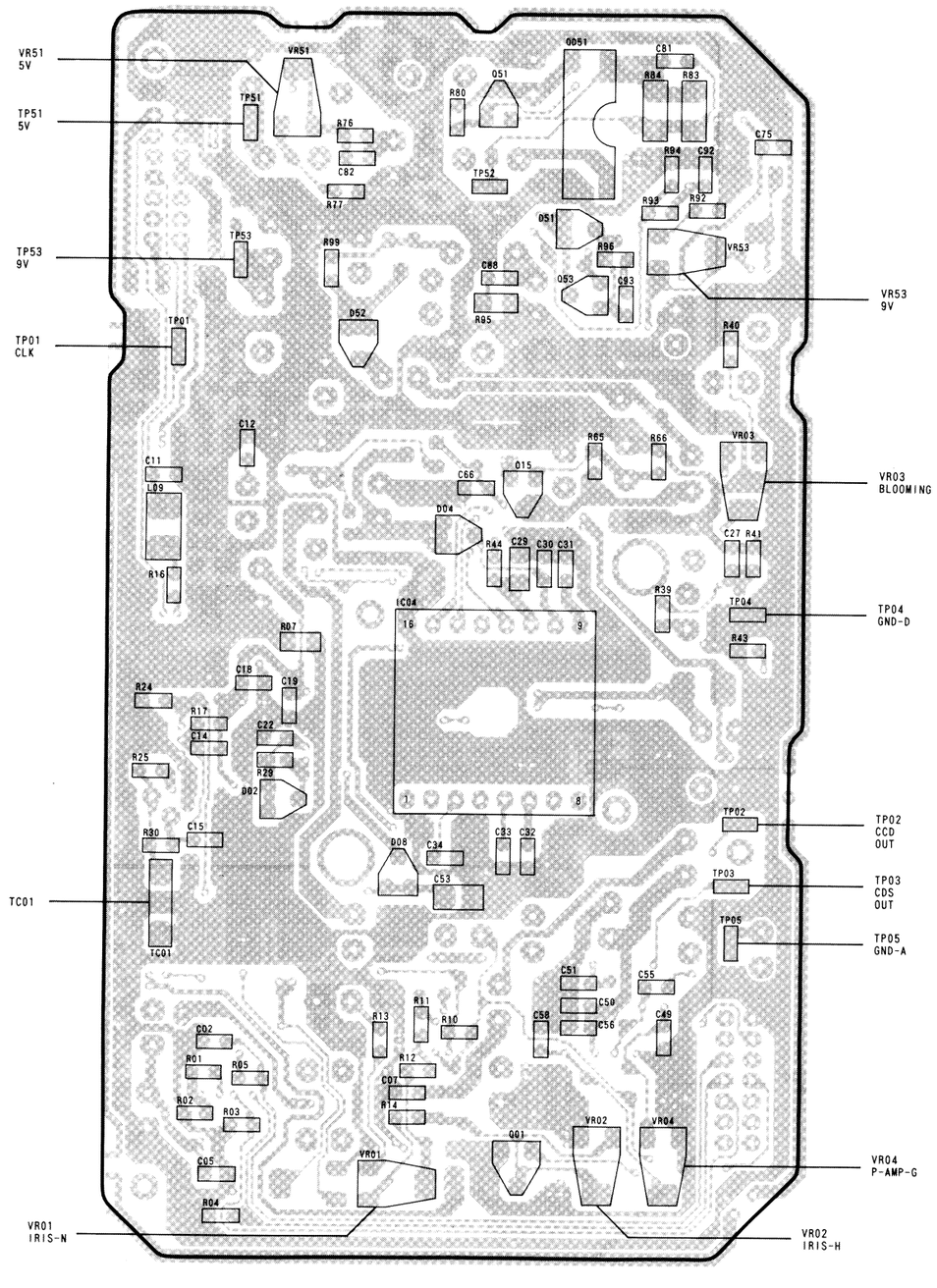

SERVO/SYSTEM CONTROL PCB(BOTTOM VIEW)

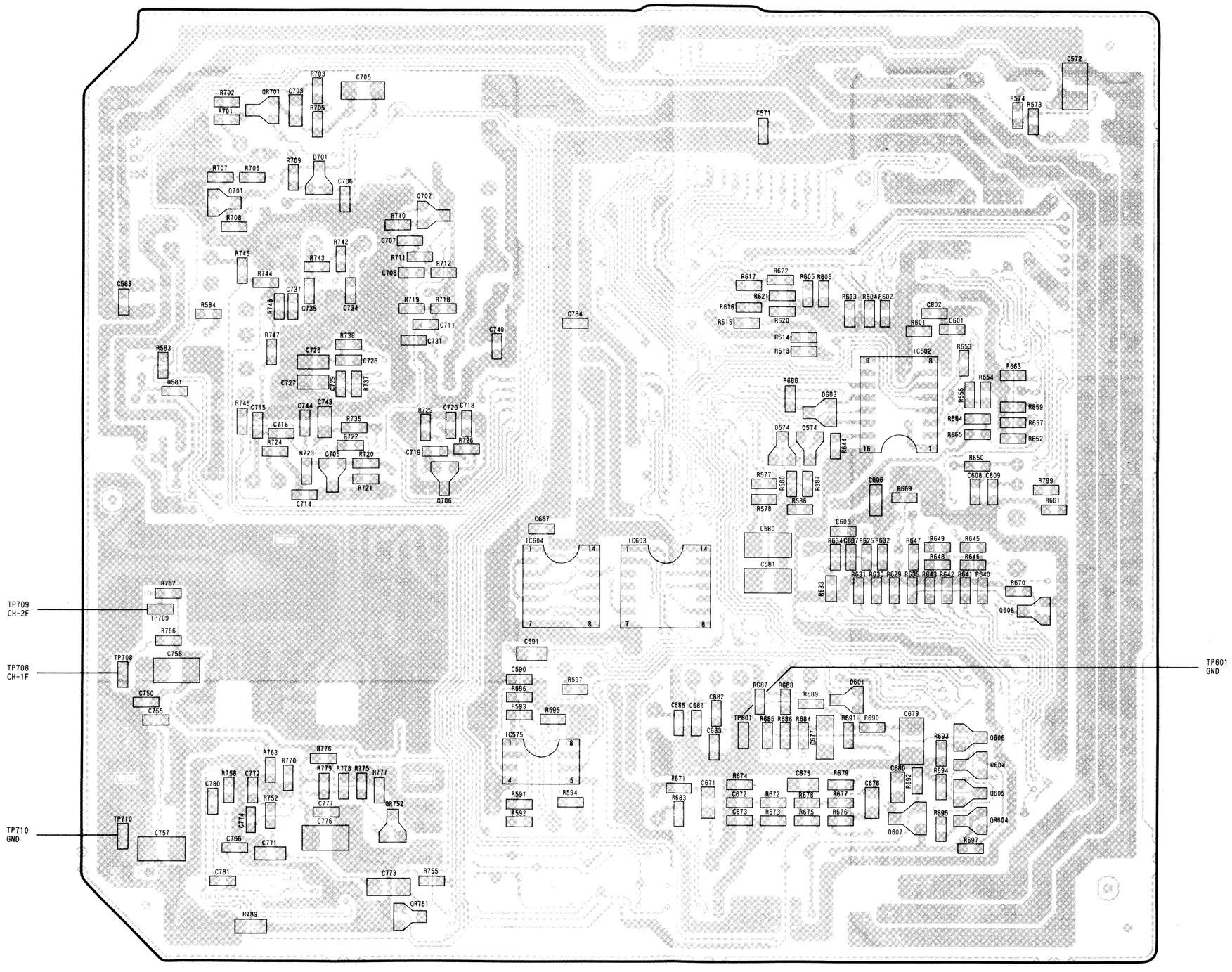

MAIN PCB(BOTTOM VIEW)

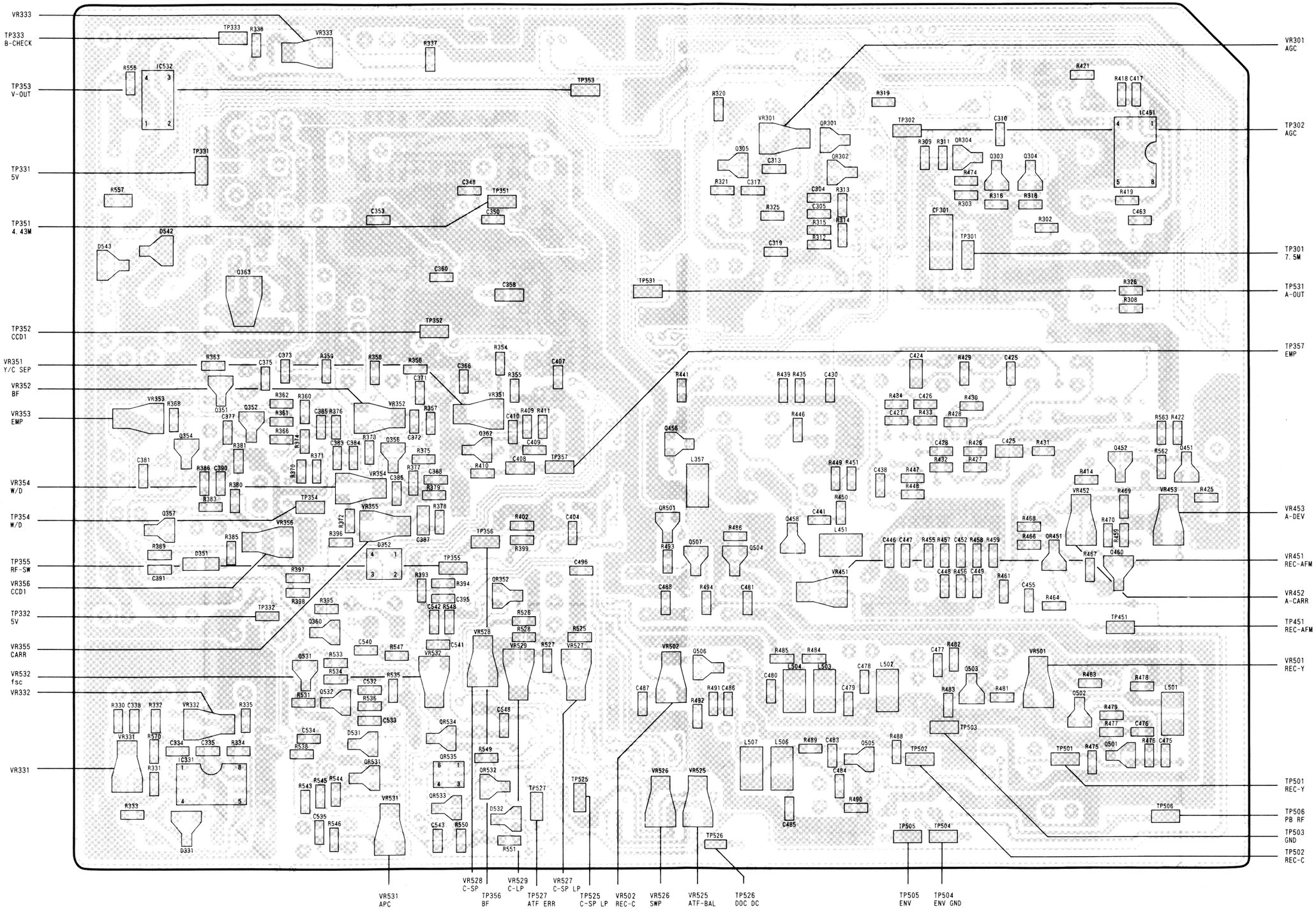

SERVO/SYSTEM CONTROL PCB(TOP VIEW)

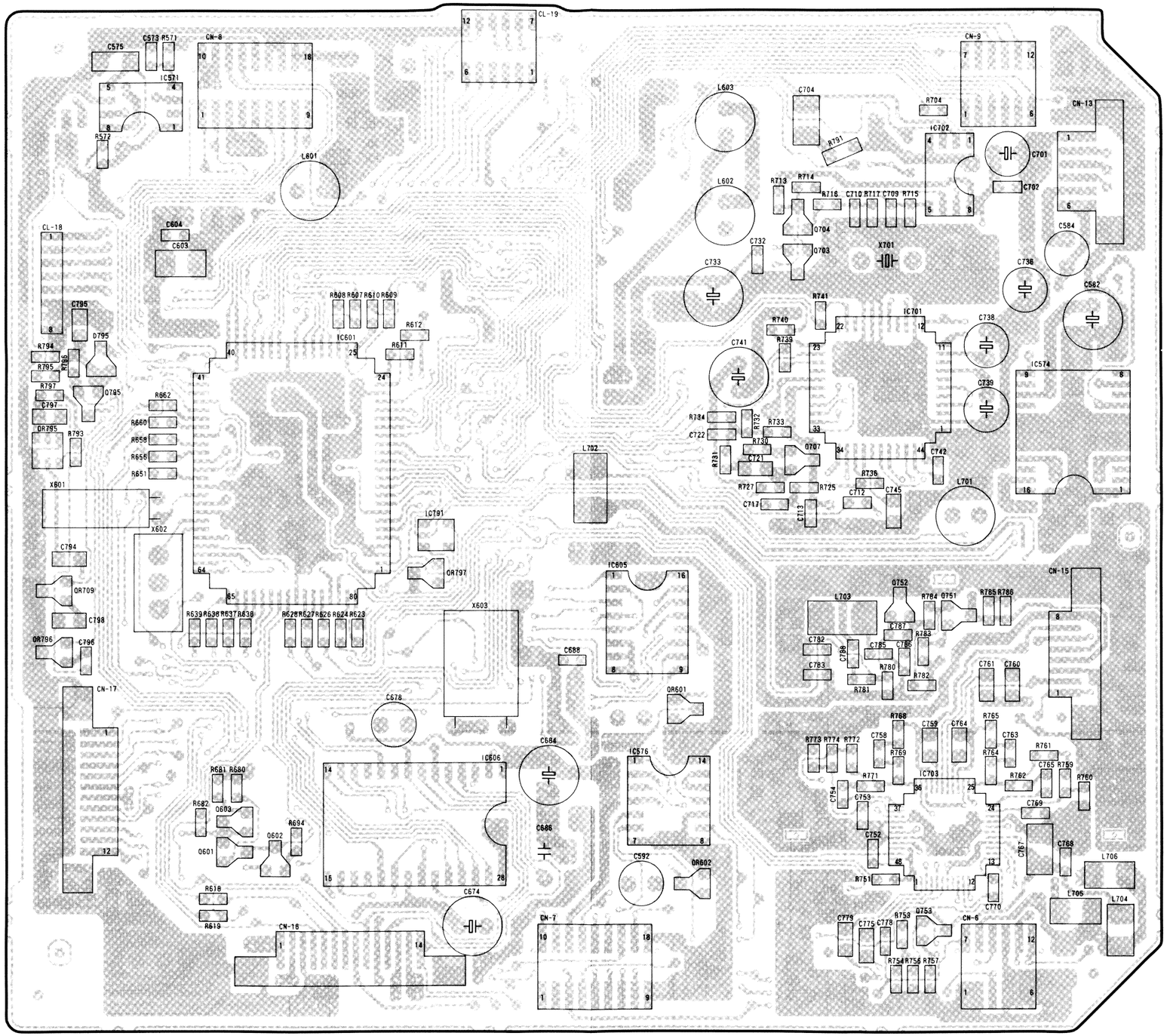

DRIVER PCB(BOTTOM VIEW)

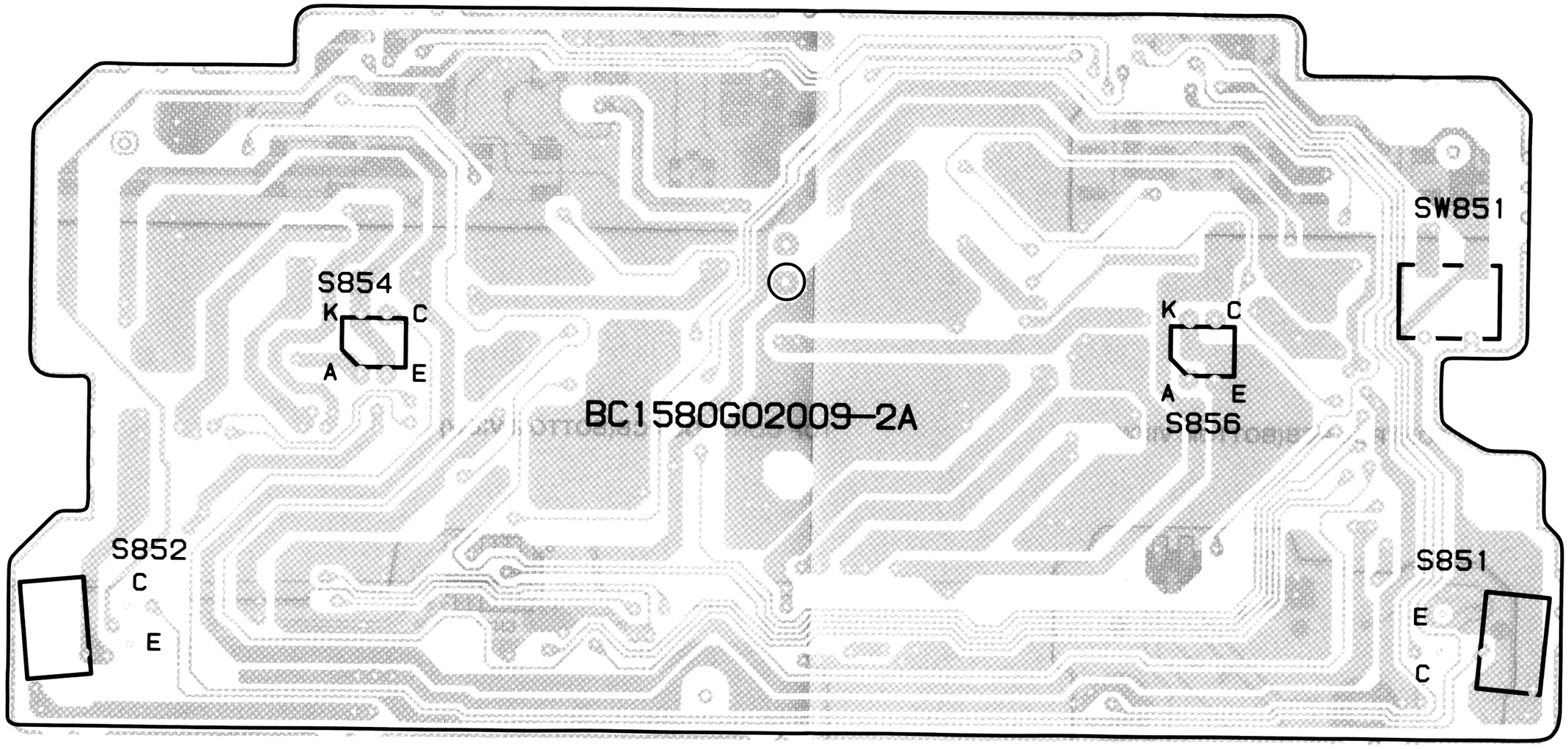

REAR CONTROL PCB(TOP VIEW)

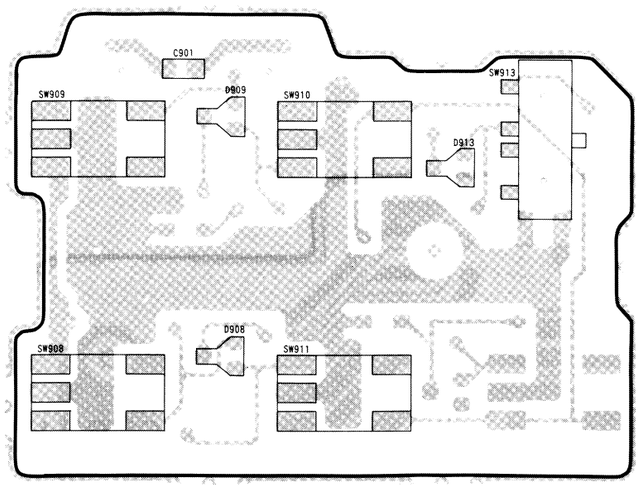

TOP CONTROL PCB(TOP VIEW)

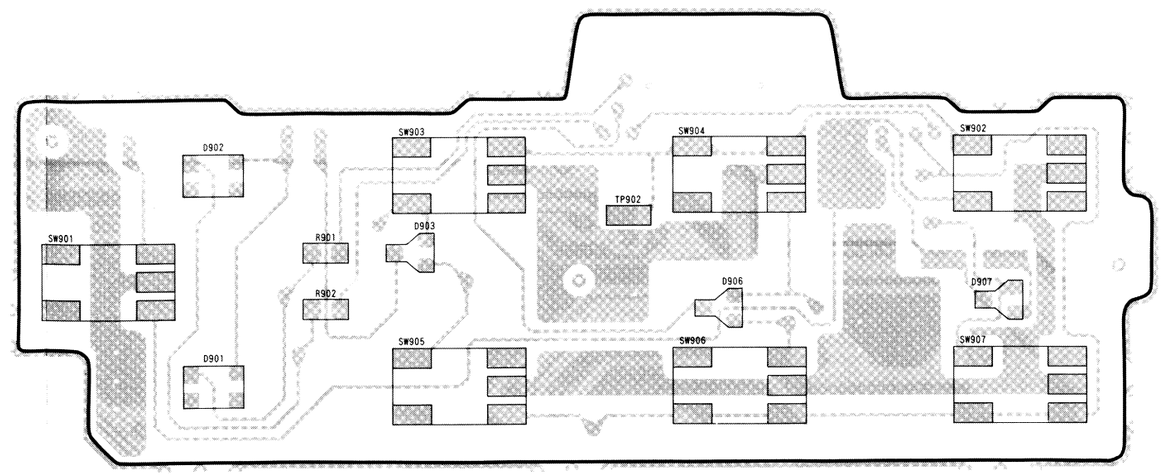

REAR CONTROL PCB(BOTTOM VIEW)

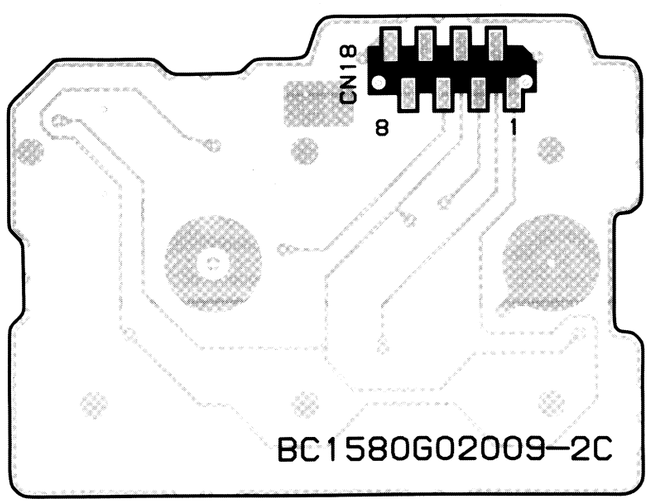

TOP CONTROL PCB(BOTTOM VIEW)

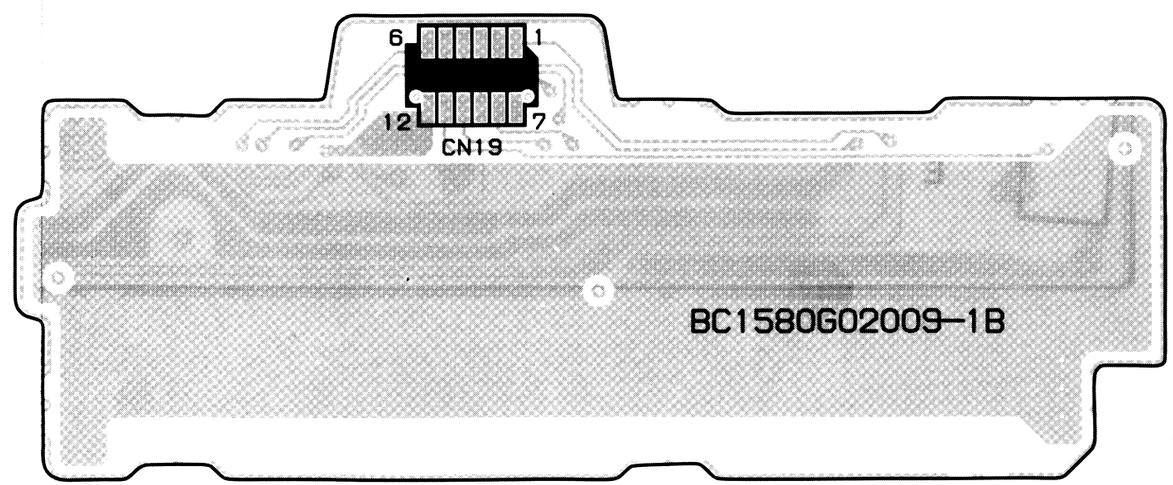

CAMERA CONTROL PCB(TOP VIEW)

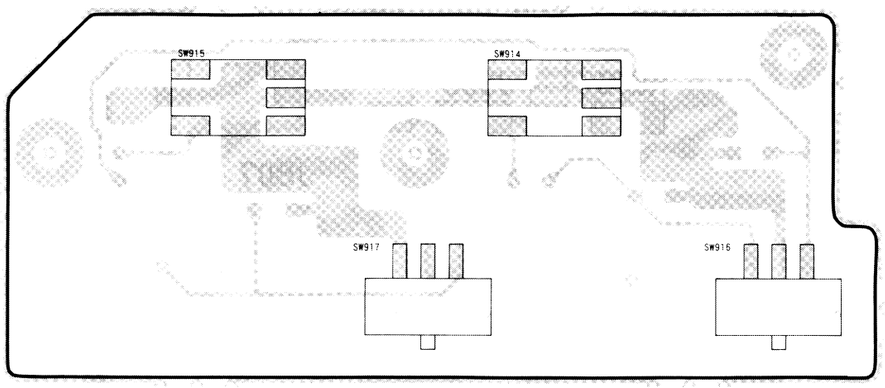

CAMERA CONTROL PCB(BOTTOM VIEW)

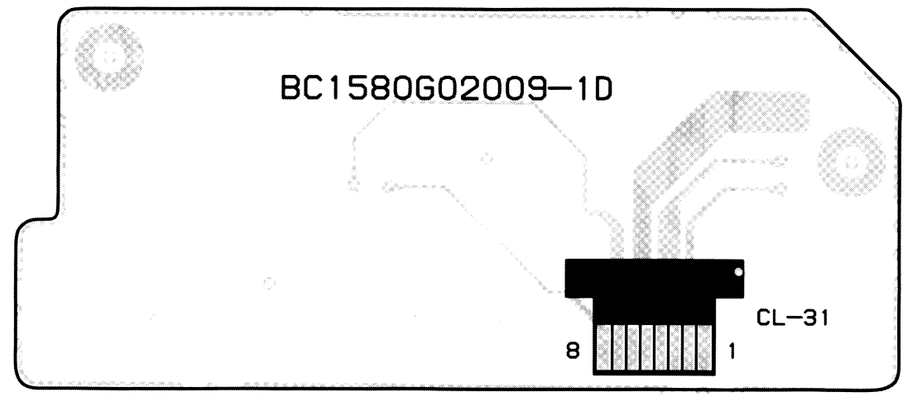

POWER PCB(TOP VIEW)

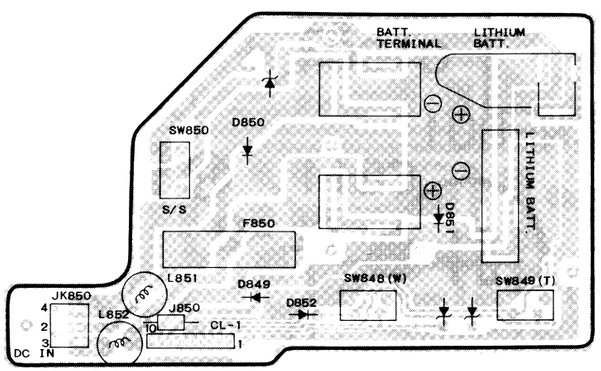

POWER PCB(BOTTOM VIEW)

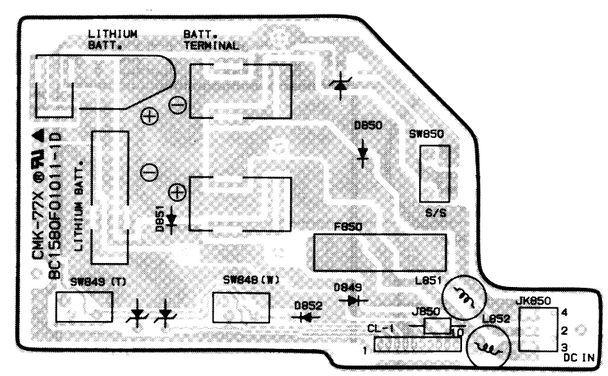

EVF PCB(TOP VIEW)

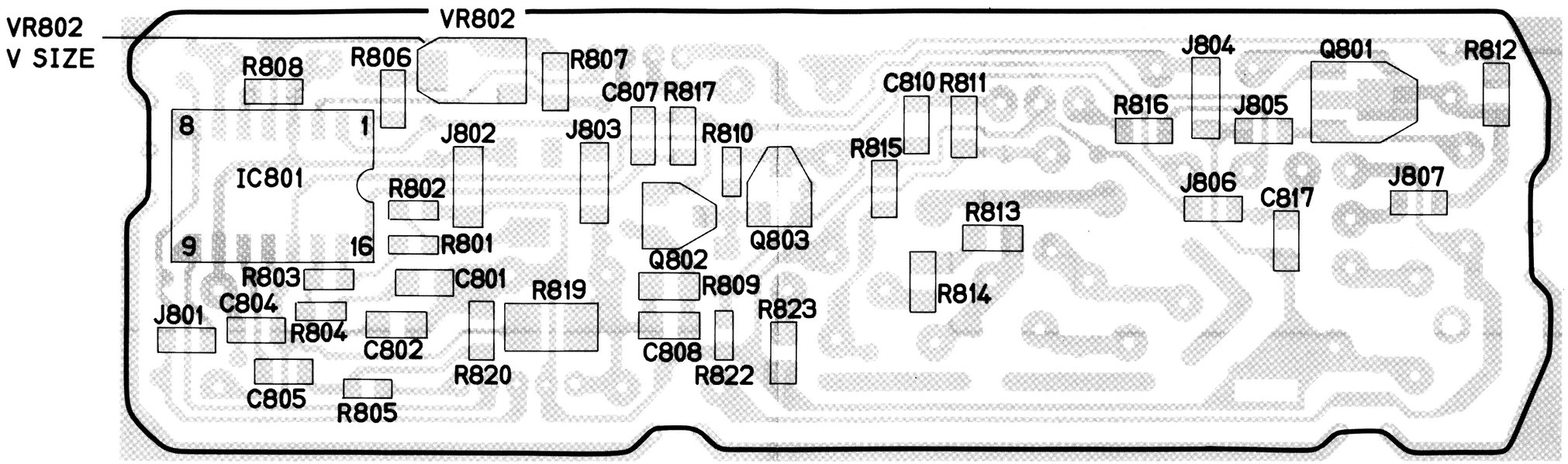

EVF PCB(BOTTOM VIEW)

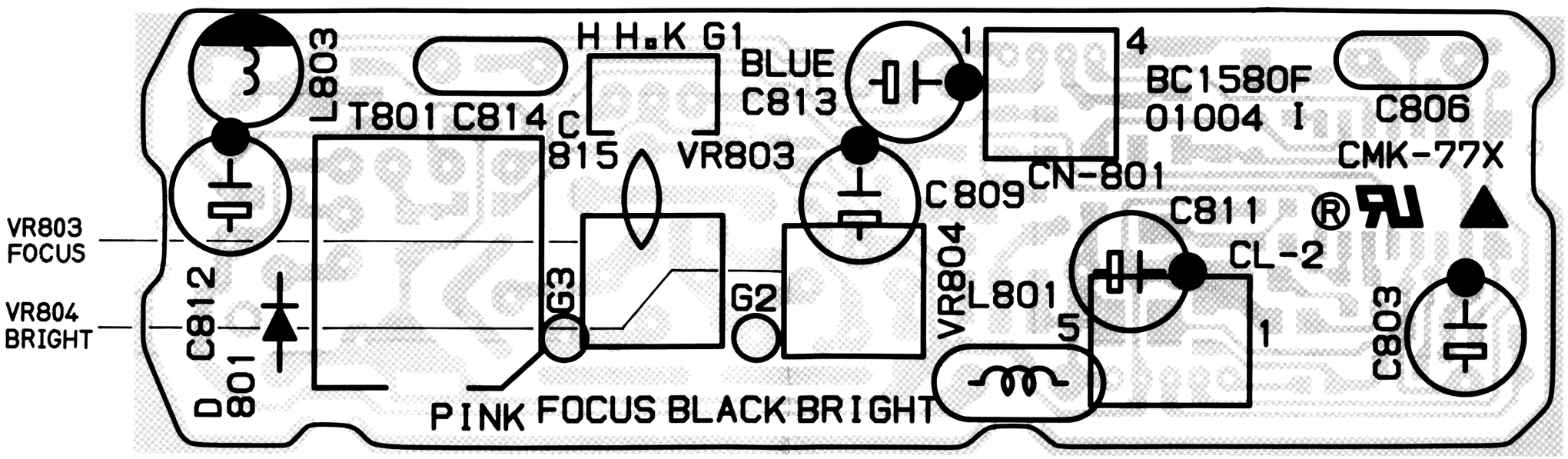

MAIN PCB(TOP VIEW)

P.C.BOARD TOP/BOTTOM VIEW AND ALIGNMENT POINT

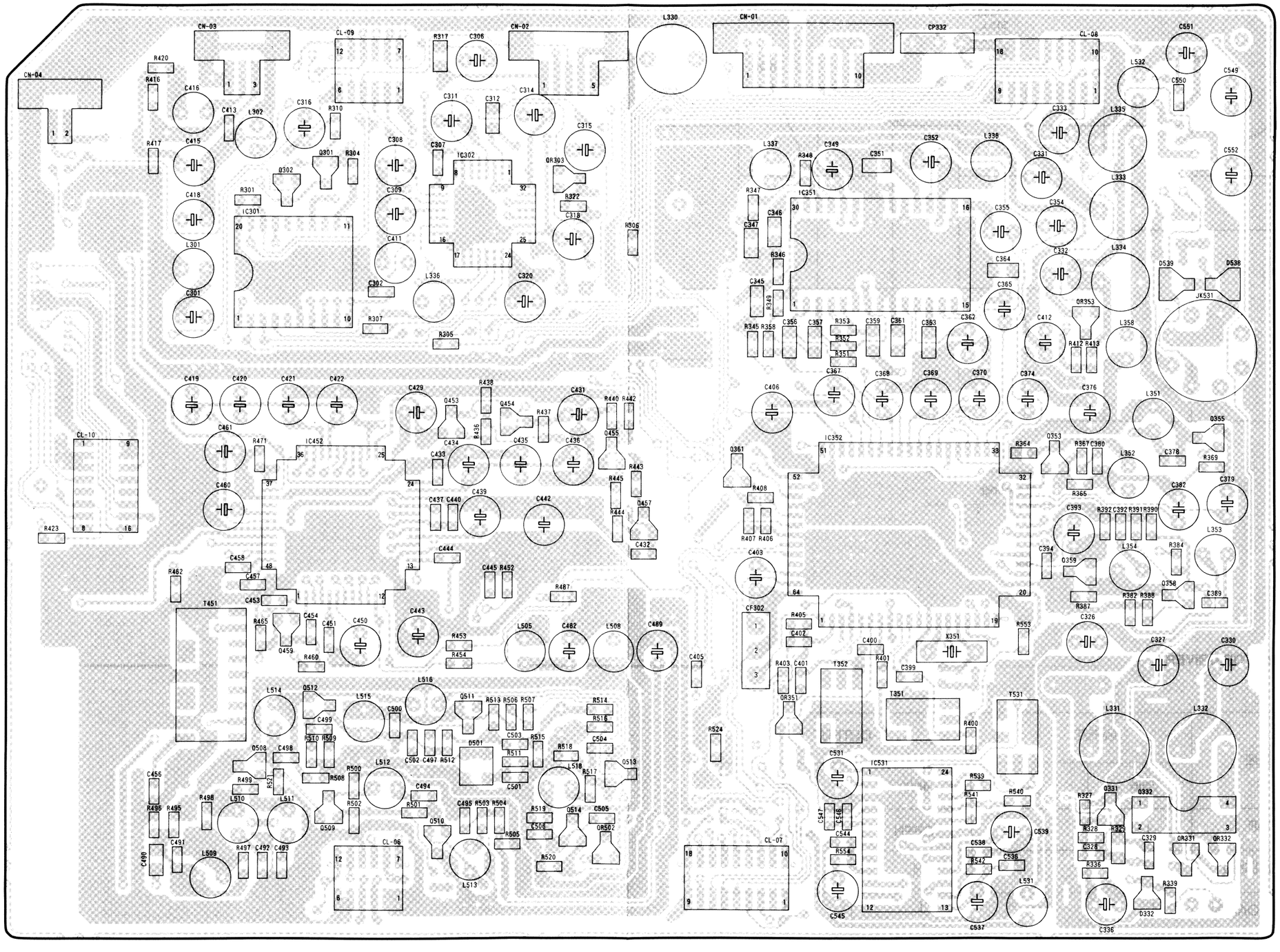

POSITION OF MODE SWITCH MECHANISM

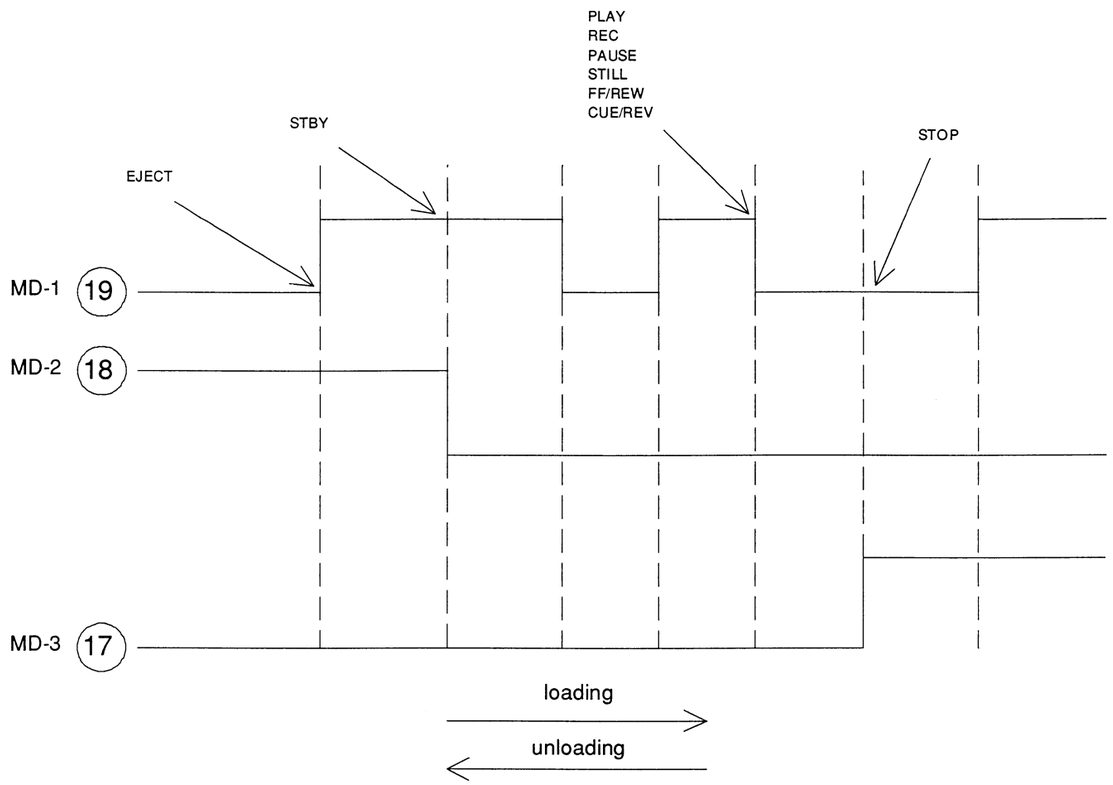

Table 1

IC574 (LOADING MOTOR DRIVER)

MODE	INPUT		OUTPUT	
	7pin	9pin	4pin	13pin
STOP	L	L	OPEN	OPEN
LOADING	H	L	H	L
UNLOADING	L	H	L	H
BRAKE	H	H	L	L

Table 2

PROCESS SCHEMATIC DIAGRAM

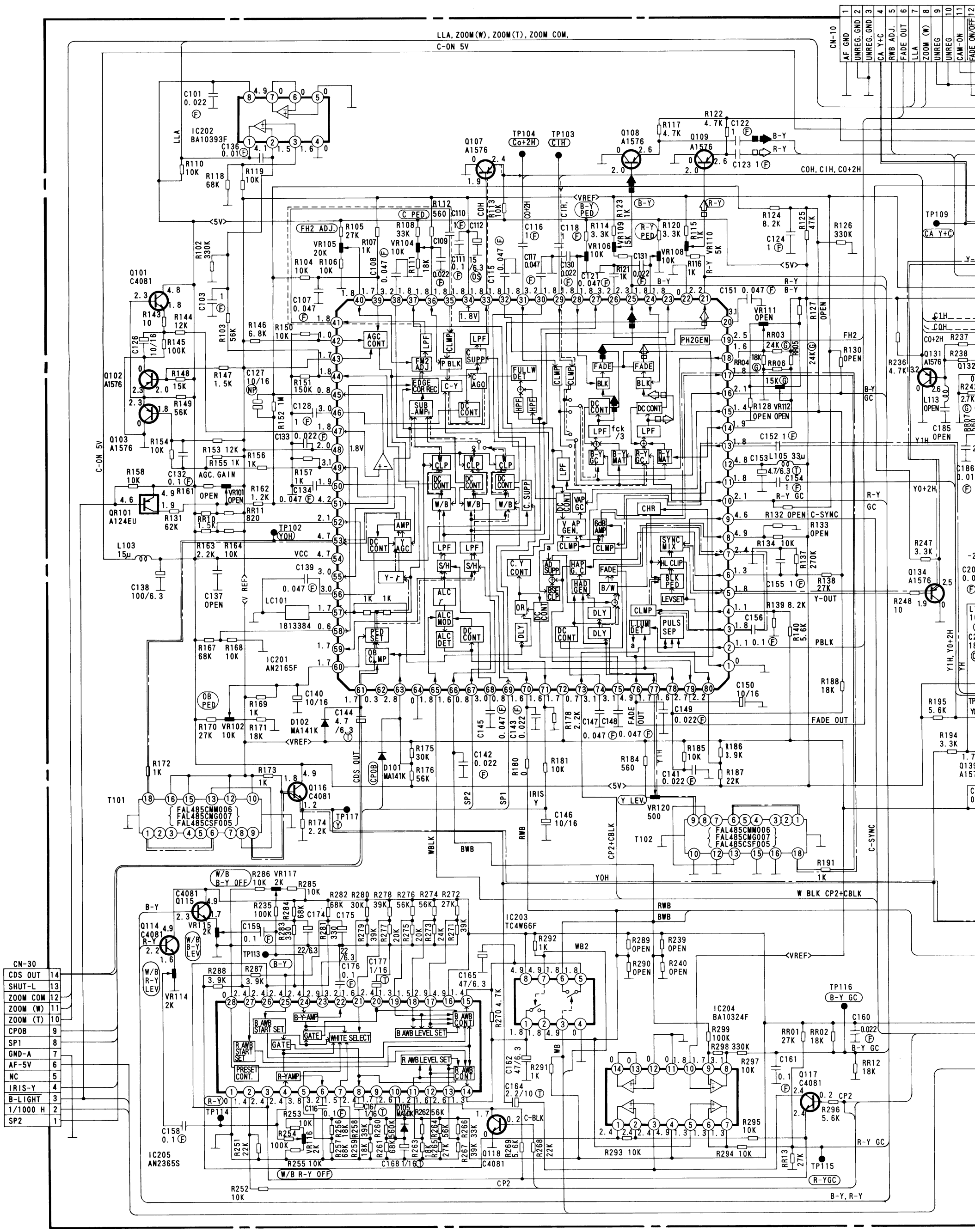

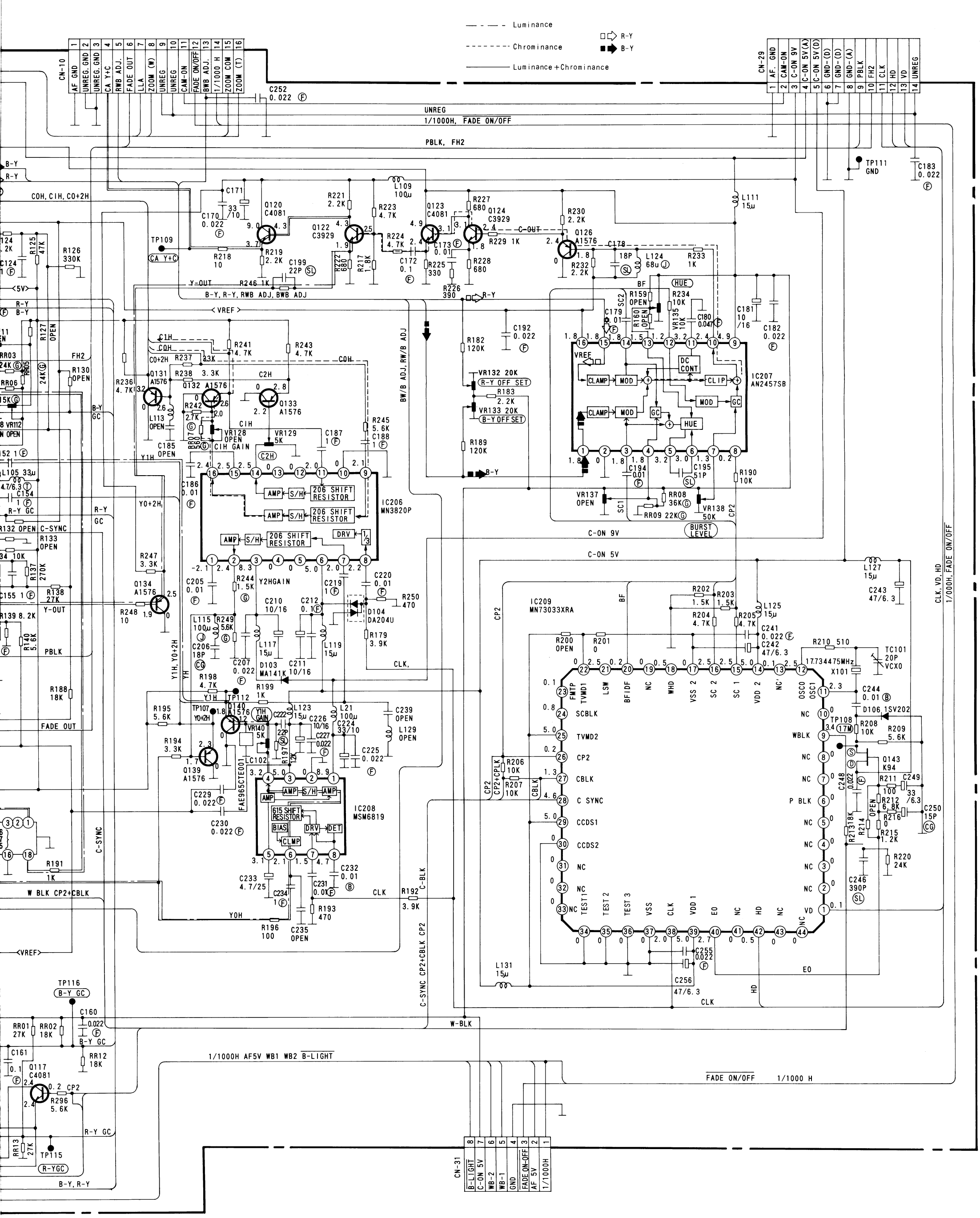
Luminance
Chrominance
Luminance+Chrominance
R-Y
B-Y
CN-10
CN-29
CN-31
IC206 MN3820P
IC207 AN2457SB
IC208 MSM6819
IC209 MN73033XRA
206 SHIFT RESISTOR
615 SHIFT RESISTOR
UNREG
1/1000H, FADE ON/OFF
PBLK, FH2
COH, C1H, CO+2H
C-OUT
Y-OUT
B-Y, R-Y, RWB ADJ, BWB ADJ
BW/B ADJ, RW/B ADJ
C-ON 9V
C-ON 5V
CLK, VD, HD
1/000H, FADE ON/OFF
W BLK CP2+CBLK
C-SYNC
C-BLK
C-SYNC CP2+CBLK CP2
W-BLK
1/1000H AF5V WB1 WB2 B-LIGHT
FADE ON/OFF 1/1000 H
17.734475MHz
TP109 CA Y+C
TP111 GND
TP116 B-Y GC
TP115 R-YGC
TP107 Y0+2H
TP112 Y1H
TP108 17M
BURST LEVEL
HUE
DC CONT
CLAMP
MOD
CLIP
GC
VREF
R-Y OFF SET
B-Y OFF SET
AMP
S/H
DRV
BIAS
CLMP
DET
Y1H GAIN
C2H GAIN
Y2HGAIN
FAE965CTE001
TC101 20P VCX0
X101

CCD SCHEMATIC DIAGRAM

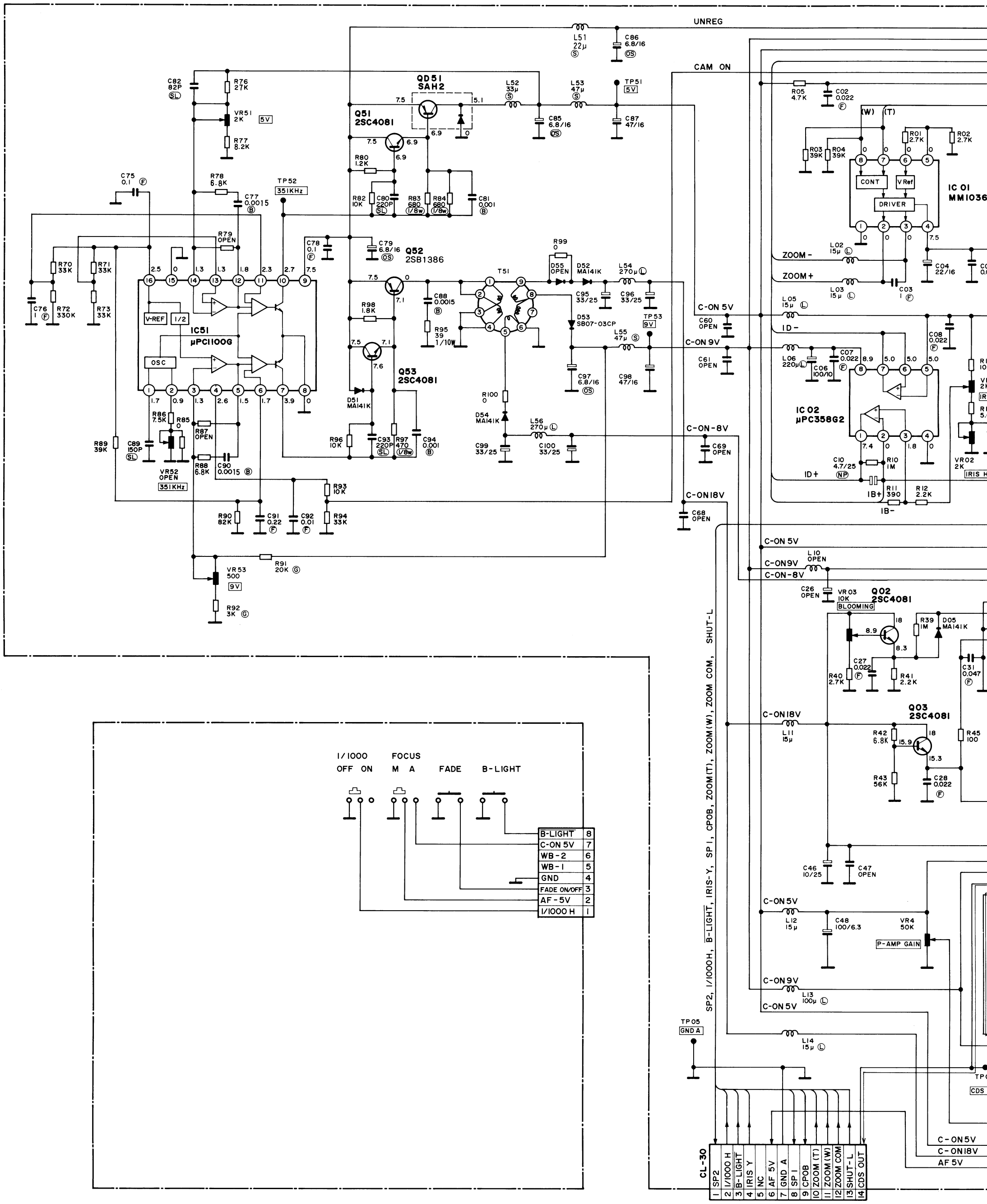

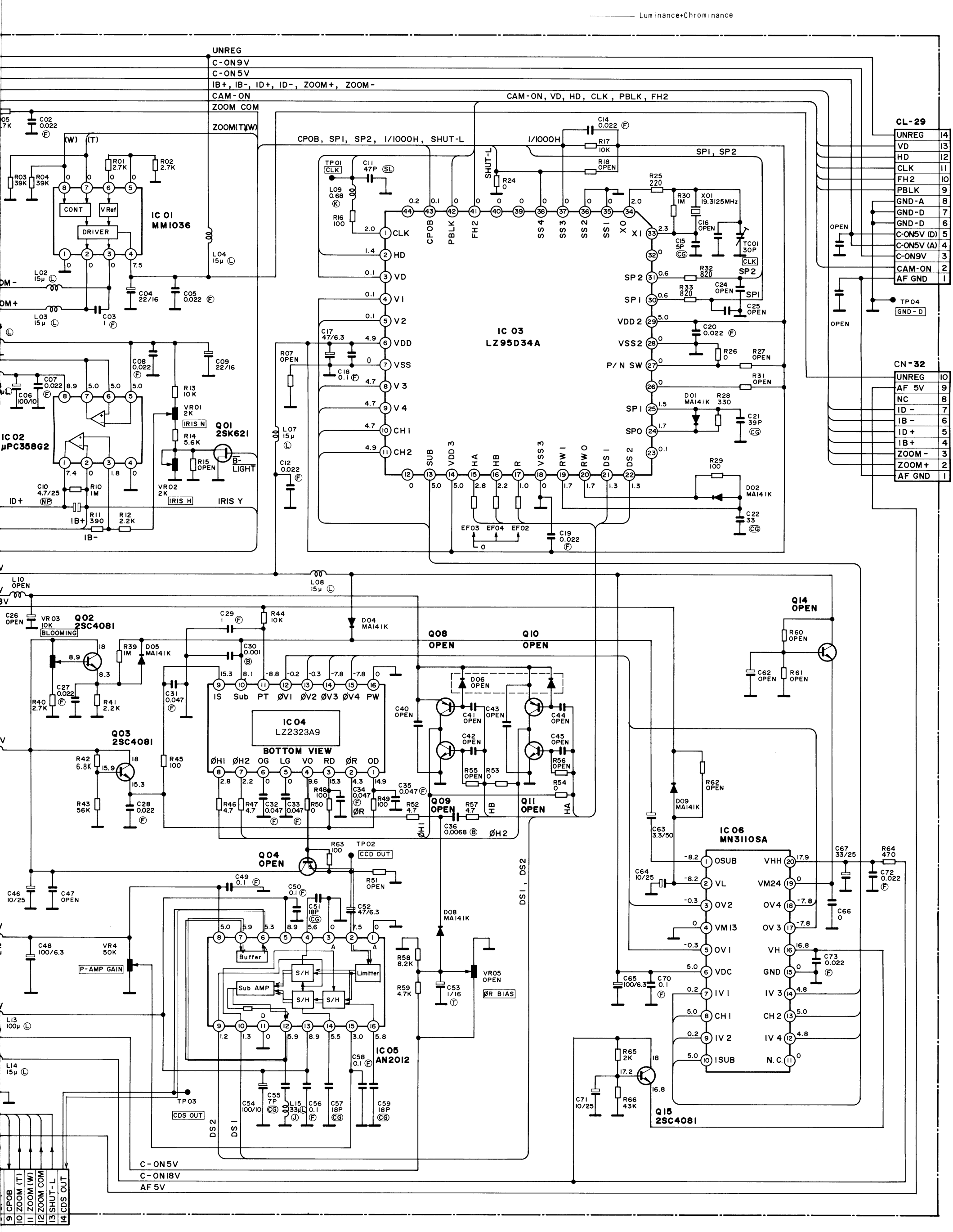

C1580EA
CAMERA (CCD) P.C.B.

MAIN SCHEMATIC DIAGRAM

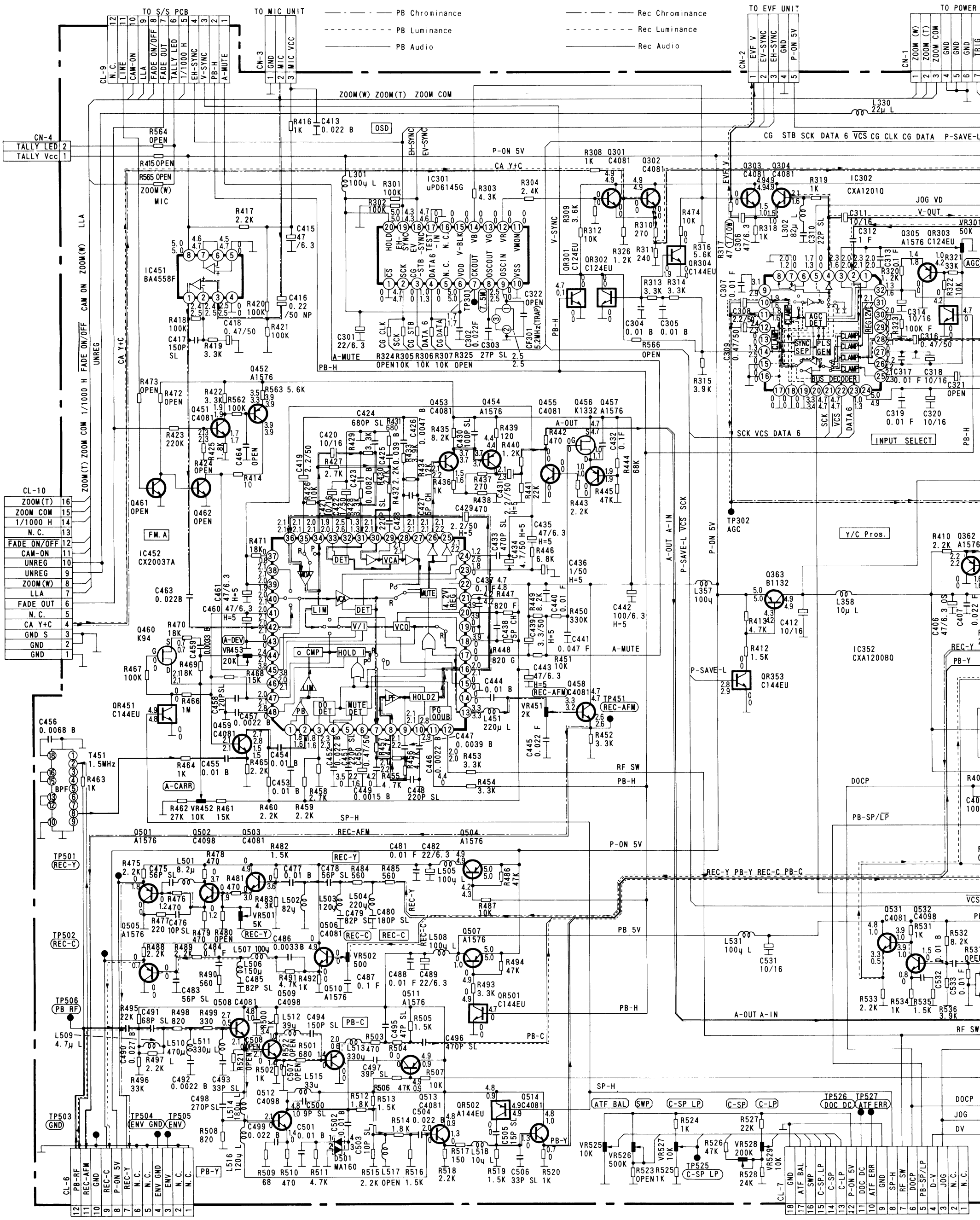

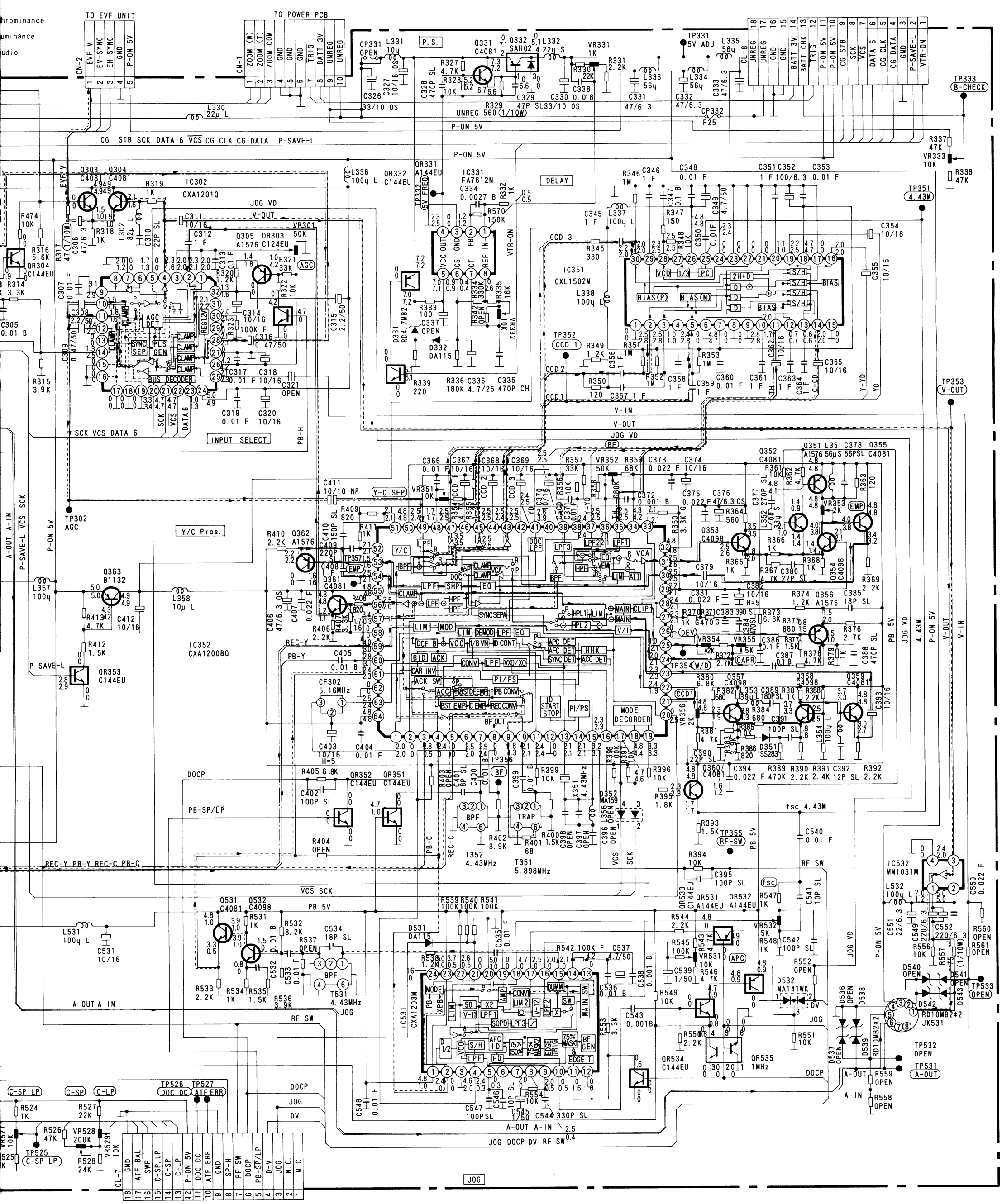
TO EVF UNIT
TO POWER PCB
IC302
CXA1201Q
IC351
CXL1502M
IC352
CXA1200BQ
IC531
CXA1203M
IC532
MM1031M
INPUT SELECT
Y/C Pros.
P.S.
DELAY
MODE DECORDER
BUS DECODER
TP302
AGC
TP331
5V ADJ
TP333
B-CHECK
TP351
4.43M
TP352
CCD 1
TP353
V-OUT
TP354
W/D
TP355
RF-SW
TP356
TP357
TP525
C-SP LP
TP526
DOC DC
TP527
ATF ERR
TP531
A-OUT
TP532
OPEN
TP533
OPEN
JK531
CN-2
CN-1
CL-8
CL-7
P-ON 5V
JOG VD
V-IN
V-OUT
A-OUT A-IN
REC-Y PB-Y REC-C PB-C
VCS SCK
PB 5V
RF SW
DOCP
JOG
DV
fsc 4.43M
T352 4.43MHz
T351 5.898MHz
T531 4.43MHz
CF302 5.16MHz

SERVO/SYSTEM CONTROL SCHEMATIC DIAGRAM

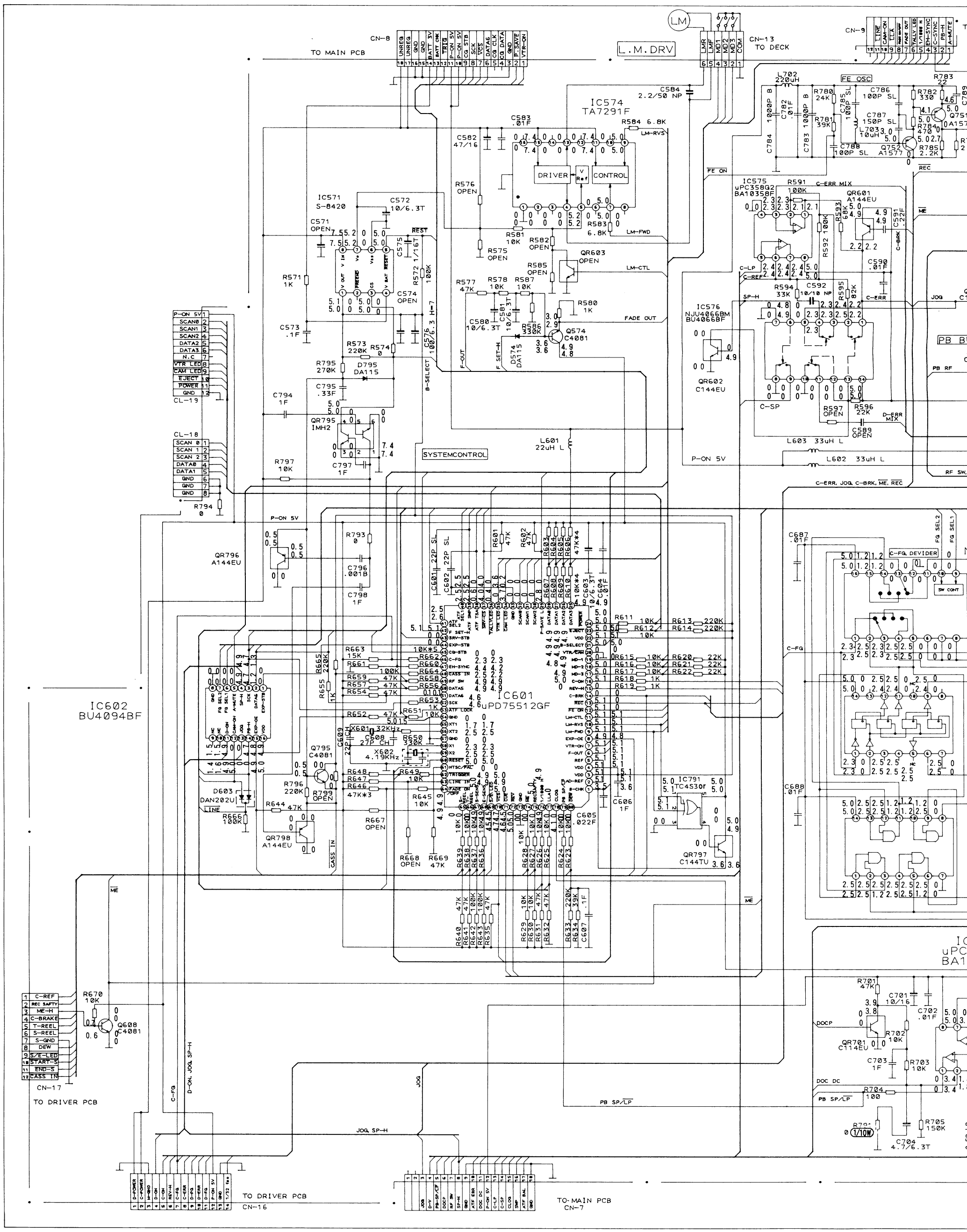

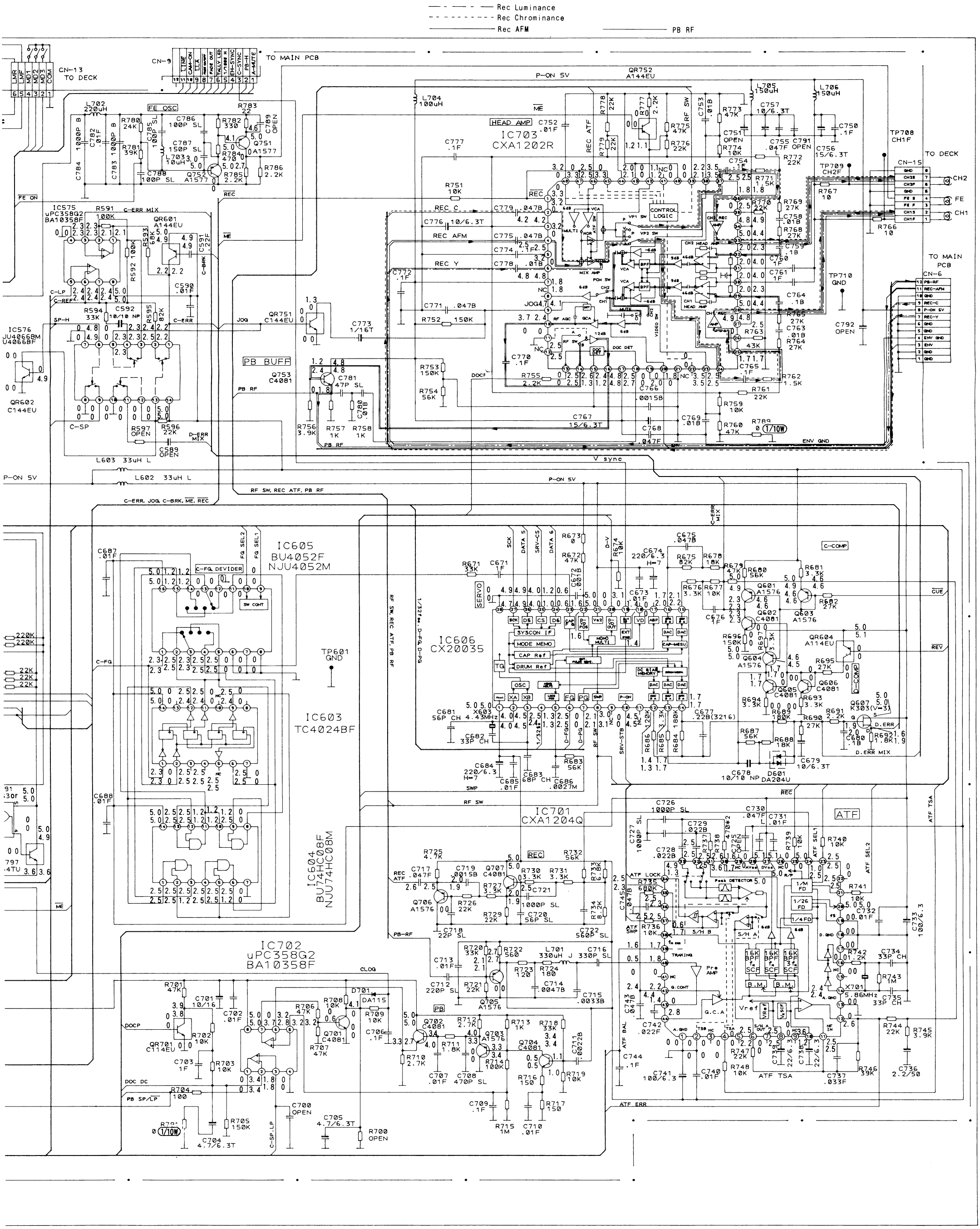
Rec Luminance
Rec Chrominance
Rec AFM
PB RF
CN-13
TO DECK
CN-9
TO MAIN PCB
HEAD AMP
IC703
CXA1202R
FE OSC
IC575
uPC358G2
BA10358F
IC576
JU4066BM
U4066BF
PB BUFF
IC605
BU4052F
NJU4052M
IC603
TC4024BF
IC604
BU74HC08F
NJU74HC08M
IC702
uPC358G2
BA10358F
IC606
CX20035
IC701
CXA1204Q
CONTROL LOGIC
C-COMP
ATF
CN-15
CN-6
TP708
CH1F
TP709
CH2F
TP710
GND
TP601
GND
C792
OPEN
P-ON 5V
V sync
RF SW, REC ATF, PB RF
C-ERR, JOG, C-BRK, ME, REC
ENV GND