Self Diagnosis
Supported model

SERVICE MANUAL

BG-3S CHASSIS

MODEL	COMMANDER	DEST.	CHASSIS NO.	MODEL	COMMANDER	DEST.	CHASSIS NO.
KV-XF25M50	RM-954	indonesia	SCC-U20L-A				

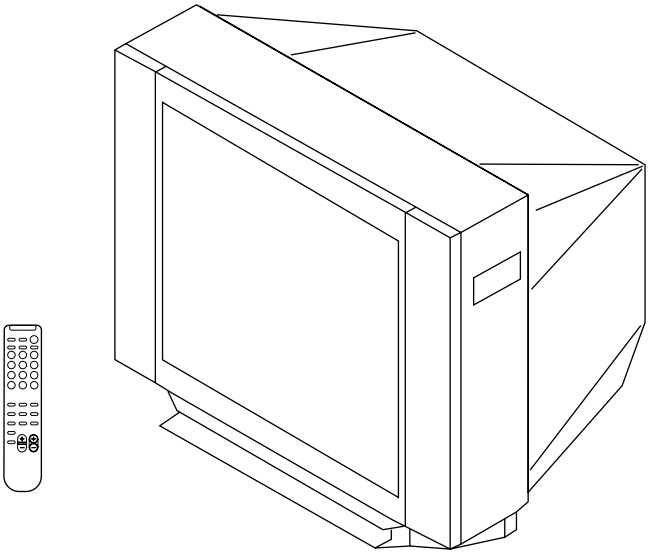

MICROFILM

TRINITRON ® COLOR TV

SONY®

SPECIFICATIONS

		Note
Power requirements	110-240V AC, 50/60 Hz	
Power consumption (W)	Indicated on the rear of the TV	
Television system	B/G, I, D/K, M	
Color system	PAL, PAL 60, SECAM, NTSC4.43, NTSC3.58	
Channel coverage		
B/G	VHF : E2 to E12 / UHF : E21 to E69 CATV : S01 to S03, S1 to S41	
I	UHF : B21 to B68 / CATV : S01 to S03, S1 to S41	
D/K	VHF : C1 to C12, R1 to R12 / UHF : C13 to C57, R21 to R60 / CATV : S01 to S03, S1 to S41, Z1 to Z39	
M	VHF : A2 to A13 UHF : A14 to A79/ CATV : A-8 to A-2, A to W+4, W+6 to W+84	
(Antenna)	75-ohm external terminal	
Audio output	6W + 6W	
Number of terminal		
(Video)	Input: 3 Output: 1	Phono jacks; 1 V_{P-P}, 75 ohms
(Audio)	Input: 3 Output: 1	Phono jacks; 500 mVrms
(S Video)	Input: 2	Y : 1 Vp-p, 75 ohms, unbalanced, sync negative C : 0.286 Vp-p, 75 ohms
(Headphone)	Output: 1	Minijack
Picture tube	25 inch	
Tube size (cm)	64	Measured diagonally
Screen size (cm)	60	Measured diagonally
Dimension (w/h/d, mm)	722 × 515 × 512	
Mass (kg)	38	

Design and specifications are subject to change without notice.

CAUTION

SHORT CIRCUIT THE ANODE OF THE PICTURE TUBE AND THE ANODE CAP TO THE METAL CHASSIS, CRT SHIELD, OR CARBON PAINTED ON THE CRT, AFTER REMOVING THE ANODE.

SAFETY-RELATED COMPONENT WARNING!!

COMPONENTS IDENTIFIED BY SHADING AND MARK ⚠ ON THE SCHEMATIC DIAGRAMS, EXPLODED VIEWS AND IN THE PARTS LIST ARE CRITICAL TO SAFE OPERATION. REPLACE THESE COMPONENTS WITH SONY PARTS WHOSE PART NUMBERS APPEAR AS SHOWN IN THIS MANUAL OR IN SUPPLEMENTS PUBLISHED BY SONY.

TABLE OF CONTENTS

Section	Title	Page
	SELF DIAGNOSIS FUNCTION	4
1.	**GENERAL**	8
2.	**DISASSEMBLY**	
2-1.	Rear Cover Removal	25
2-2.	Chassis Assy Removal	25
2-3.	F Bracket Removal	25
2-4.	Service Position	25
2-5.	Replacement of Parts	26
2-5-1.	Replacement of Control Button	26
2-5-2.	Replacement of Light Guide	26
2-6.	Terminal Bracket Removal	26
2-7.	H3 Board Removal	26
2-8.	A and B3 Boards Removal	27
2-9.	Picture Tube Removal	27
3.	**SET-UP ADJUSTMENTS**	
3-1.	Beam Landing	29
3-2.	Convergence	30
3-3.	Focus Adjustment	32
3-4.	G2 (Screen) and White Balance Adjustments	33
4.	**CIRCUIT ADJUSTMENT**	
4-1.	Adjustments with Commander	34
4-2.	Adjustment Method	35
4-3.	Picture Quality Adjustments	40
4-4.	A Board Adjustment After IC003 (Memory) Replacement	40
4-5.	Picture Distortion Adjustment	41
5.	**DIAGRAMS**	
5-1.	Block Diagram	43
5-2.	Frame Schematic Diagram	46
5-3	Circuit Boards Location	49
5-4.	Schematic Diagrams and Printed Wiring Boards	50
(1)	Schematic Diagram of A (1/2) Board	53
(2)	Schematic Diagrams of A (2/2) and F Boards	57
(3)	Schematic Diagram of B2 and VM1 Boards	61
(4)	Schematic Diagrams of B3 Board	64
(5)	Schematic Diagram of C and H3 Boards	73
5-5.	Semiconductors	76
6.	**EXPLODED VIEWS**	
6-1.	Speaker Bracket	79
6-2.	Chassis	80
6-3.	Picture Tube	81
7.	**ELECTRICAL PARTS LIST**	82

SELF DIAGNOSTIC FUNCTION

The units in this manual contain a self-diagnostic function. If an error occurs, the STANDBY/TIMER lamp will automatically begin to flash.
The number of times the lamp flashes translates to a probable source of the problem. A definition of the STANDBY/TIMER lamp flash indicators is listed in the instruction manual for the user's knowledge and reference. If an error symptom cannot be reproduced, the remote commander can be used to review the failure occurrence data stored in memory to reveal past problems and how often these problems occur.

1. DIAGNOSTIC TEST INDICATORS

When an errors occurs, the STANDBY/TIMER lamp will flash a set number of times to indicate the possible cause of the problem. If there is more than one error, the lamp will identify the first of the problem areas.

Result for all of the following diagnostic items are displayed on screen. No error has occured if the screen displays a "0".

Diagnostic Item Description	No. of times STANDBY/TIMER lamp flashes	Self-diagnostic display/Diagnostic result	Probable Cause Location	Detected Symptoms
• Power does not turn on	Does not light	—	• Power cord is not plugged in. • Fuse is burned out F4601 (F)	• Power does not come on. • No power is supplied to the TV. • AC power supply is faulty.
• +B overcurrent (OCP) or overvoltage (OVP) • Vertical deflection stopped • Horizontal deflection overdrive	2 times	002:000 or 002:001~255 003:001~255 004:001~255 at the same time	• H.OUT Q511 is shorted. (A board) • IC701 is shorted. (C board) • -13V is not supplied. (A board) • IC 503 faulty (A board)	• Power does not come on. • Load on power line is shorted. • Has entered standby state after horizontal raster. • Vertical deflection pulse is stopped. • Power line is shorted or power supply is stopped.
• White balance failure (no PICTURE)	5 times	005:000 or 005:001~225	• G2 is improperly adjusted. (Note 2) • CRT problem. • Video OUT IC701 is faulty. (C board) • IC301 is faulty. (A board) • No connection A board to C board.	• No raster is generated. • CRT cathode current detection reference pulse output is small.
• Micro reset	—	101:00 or 101:001~225	• Discharge CRT (C Board) • Static discharge • External noise	• Power is shut down shortly, after this return back to normal. • Detect Micro latch up.

Note 1: If a + B overcurrent is detected, stoppage of the vertical deflection is detected simultaneously.
The symptom that is diagnosed first by the microcontroller is displayed on the screen.
Note 2: Refer to screen (G2) Adjustment in section 3-4 of this manual.

2. DISPLAY OF STANDBY/TIMER LIGHT FLASH COUNT

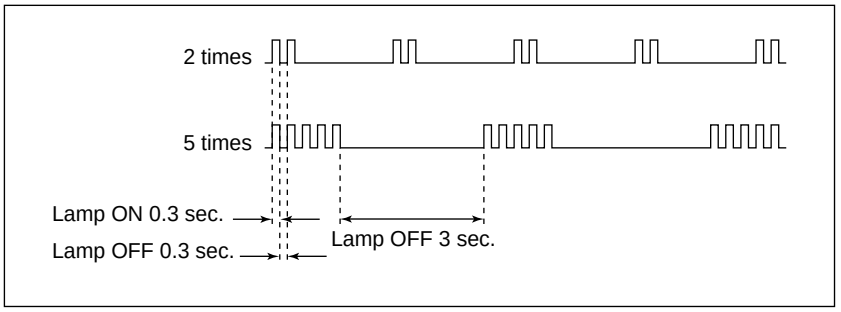

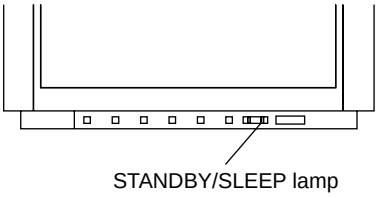

Diagnostic Item	Flash Count*
+B overcurrent/overvoltage Vertical deflection stopped	2 times
White balance failure	5 times

* One flash count is not used for self-diagnostic.

3. STOPPING THE STANDBY/TIMER FLASH

Turn off the power switch on the TV main unit or unplug the power cord from the outlet to stop the STANDBY/TIMER lamp from flashing.

4. SELF-DIAGNOSTIC SCREEN DISPLAY

For errors with symptoms such as “power sometimes shuts off” or “screen sometimes goes out” that cannot be confirmed, it is possible to bring up past occurances of failure for confirmation on the screen:

[To Bring Up Screen Test]
In standby mode, press buttons on the remote commander sequentially in rapid succession as shown below:

Screen display ➡ channel 5 ➡ Sound volume - ➡ Power ON
⇧
Note that this differs from entering the service mode (mode volume +).

Self-Diagnosis screen display

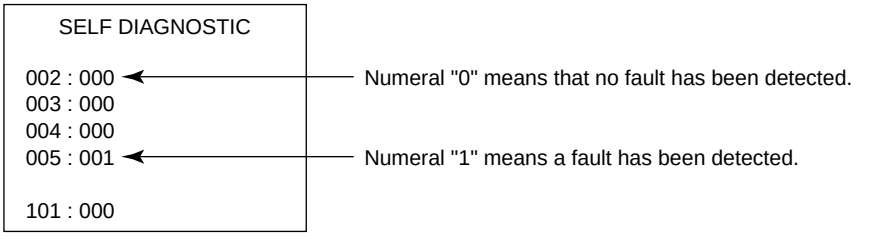

5. HANDLING OF SELF-DIAGNOSTIC SCREEN DISPLAY

Since the diagnostic results displayed on the screen are not automatically cleared, always check the self-diagnostic screen during repairs. When you have completed the repairs, clear the result display to “0”.

Unless the result display is cleared to “0”, the self-diagnostic function will not be able to detect subsequent faults after completion of the repairs.

[Clearing the result display]
To clear the result display to “0”, press buttons on the remote commander sequentially as shown below when the diagnostic screen is being displayed.

Channel 8 ➡ 0

[Quitting Self-diagnostic screen]
To quit the entire self-diagnostic screen, turn off the power switch on the remote commander or the main unit.

6. SELF-DIAGNOSTIC CIRCUIT

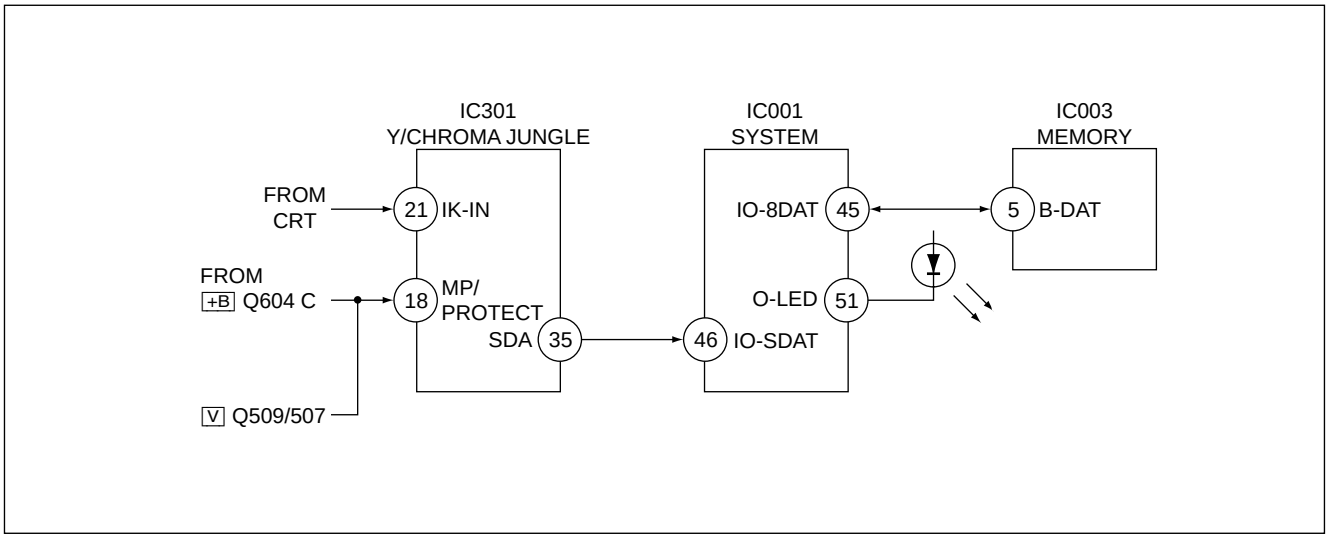

+B overcurrent (OCP)	Occurs when an overcurrent on the +B(135) line is detected by Q604. If Q604 go to ON and the voltage to pin 18 of IC301 should go down when V.SYNC is more than seven verticals in a period, the unit will automatically turn off.
Vertical deflection stopped	Occurs when an absence of the vertical deflection pulse is detected by Q509 and IC001 shut down the power supply.
Vertical deflection overcurrent	Occurs when an overcurrent on V drive line is detected by Q507. Power supply will be shut down when detect this by IC001.
White balance failure	If the RGB levels* do not balance or become low level within 5 seconds, this error will be detected by IC301. TV will stay on, but there will be no picture.

* (Refers to the RGB levels of the AKB detection Ref pulse that detects IK.)

The operating instructions mentioned here are partial abstracts from the Operating Instruction Manual. The page numbers of the Operating Instruction Manual remain as in the manual.

SECTION 1
GENERAL

WARNING

- Dangerously high voltages are present inside the TV.
- Operate the TV only between 110 – 240 V AC.

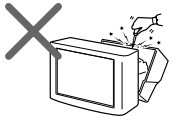

Do not open the cabinet and the rear cover of the TV. Refer servicing to qualified personnel.

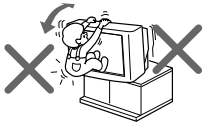

Install the TV in a stable position. Do not allow children to climb onto it.

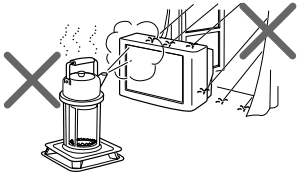

To prevent fire or shock hazard, do not expose the TV to rain or moisture.

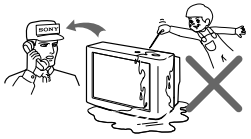

Do not operate the TV if any liquid or solid object falls into it. Have it checked immediately by qualified personnel only.

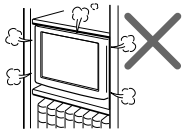

Do not install the TV in a confined space, such as a bookcase or built-in cabinet.
Do not block the ventilation openings of the TV.

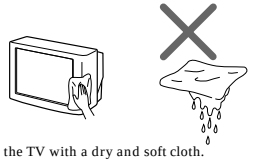

Clean the TV with a dry and soft cloth.
Do not use benzine, thinner, or any other chemicals to clean the TV. Do not scratch the picture tube.

Do not pull the power cord to disconnect the TV. Pull it out by the plug.

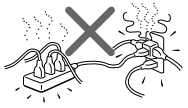

Do not plug in too many appliances to the same power socket. Do not damage the power cord.

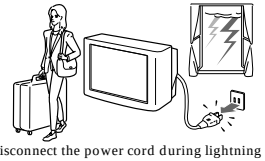

Disconnect the power cord during lightning storms or if you are not going to use the TV for several days.

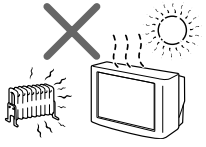

Do not install the TV in hot, humid or excessively dusty places.

Using Your New TV

Getting Started

Step 1

Connect the antenna

If you wish to connect a VCR, see the "Connecting a VCR" diagram below.

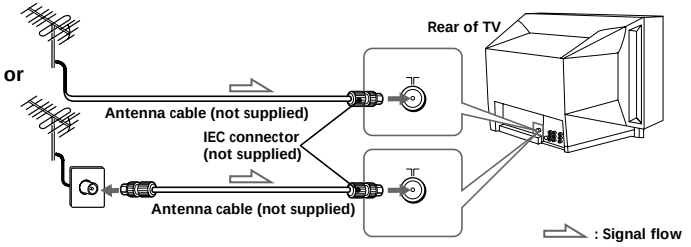

CAUTION

Do not connect the power cord until you have completed making all other connections; otherwise a minimum leakage current might flow through the antenna and other terminals to ground.

Connecting a VCR

To watch the video, press ⊖⊕ (see page 10).

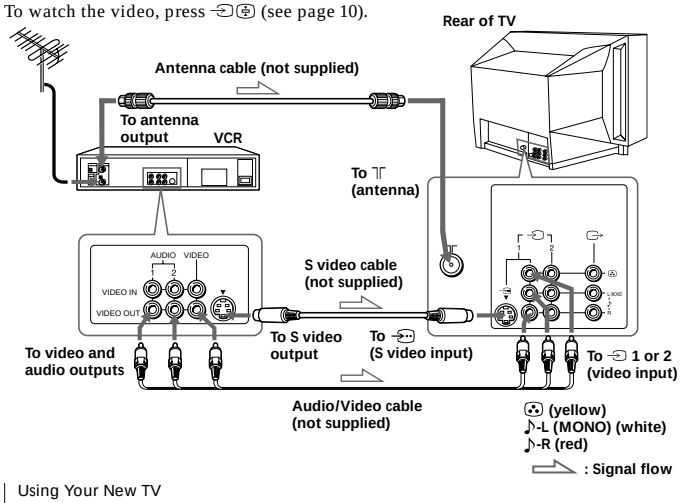

Notes

- If you connect a monaural VCR, connect the yellow plug to (the yellow jack) and the black plug to ♪-L (MONO) (the white jack).
- If you connect a VCR to the (antenna) terminal, preset the signal output from the VCR to the program number 0 on the TV.
- If both (S video input) and 1 (video input) at the rear of your TV are input at the same time, the (S video input) is automatically selected. To view 1 (video input), disconnect the S video cable.
- When no signal is input to the connected video equipment, the TV screen becomes blue.

Step 2

Insert the batteries into the remote

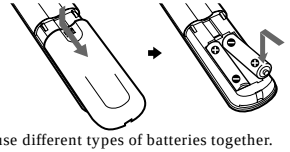

Note

- Do not use old batteries nor use different types of batteries together.

Step 3

Preset the channels automatically

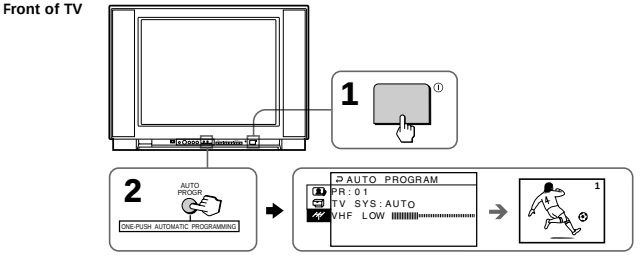

Tip

- If you want to stop the automatic channel presetting, press MENU twice.

Note

- During automatic channel presetting, the TV system (TV SYS) in the AUTO PROGRAM menu will indicate "B/G", "I", "D/K" or "M".

Now You Are Ready. . .

To watch your TV, see page 9.

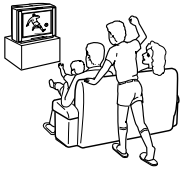

Connecting optional components

You can connect optional audio/video components, such as a VCR, multi disc player, camcorder, video game or stereo system.

To watch the picture of the connected equipment, press (see page 10).

Connecting a camcorder/video game equipment using the (video input) jacks

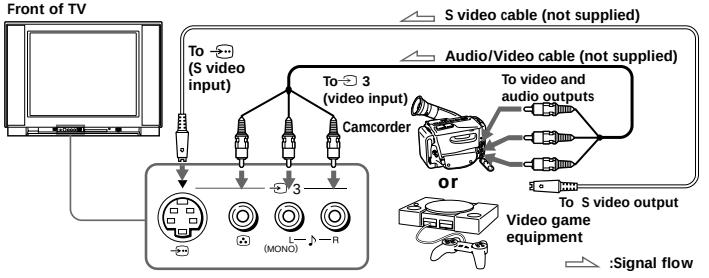

Notes

- You can also connect video equipment to the 1 or 2 (video input) jacks at the rear of your TV.
- If both (S video input) and 3 (video input) at the front of your TV are input at the same time, the (S video input) is automatically selected. To view 3 (video input), disconnect the S video cable.

Connecting audio/video equipment using the (monitor output) jacks

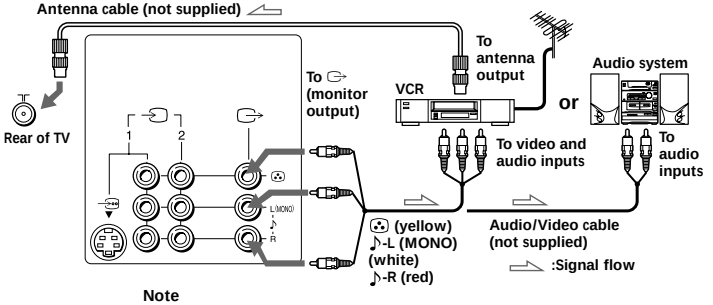

Note

- When connecting a monaural VCR, connect the yellow plug to (the yellow jack) and the black plug to ♪ -L (MONO) (the white jack).

Securing the TV

To prevent the TV from falling, secure the TV using one of the following methods:

A With the supplied screws, attach the band to the TV stand and to the rear of the TV using the provided hole.

or

B Put the cord or chain through the clamps to secure the TV against a wall or pillar.

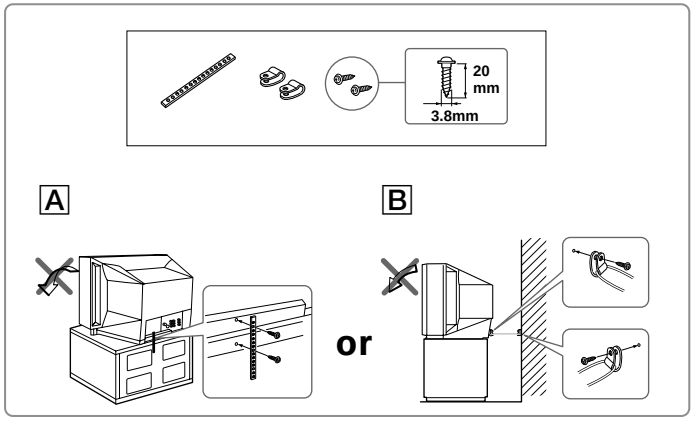

Note

- Use only the supplied screws. Use of other screws may damage the TV.

Watching the TV

This section explains functions used while watching TV. Most operations can be done using the remote.

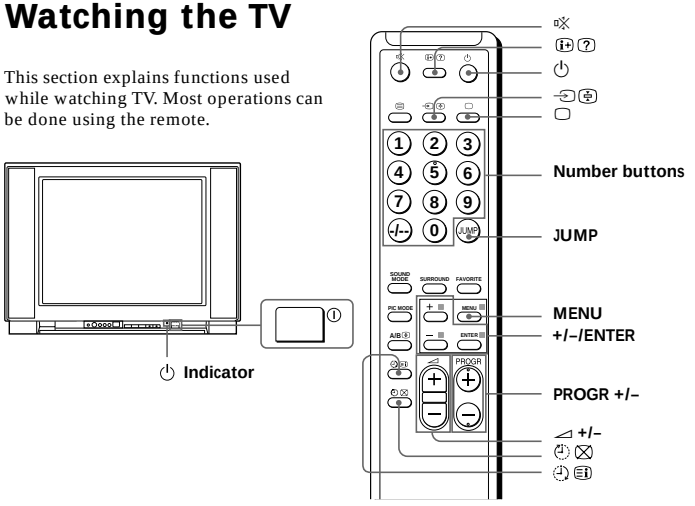

1 Press ① to turn on the TV.

When the TV is in the standby mode (the ⏻ indicator on the TV is lit red), press ⏻ on the remote or PROGR + / – on the TV.

2 Press PROGR +/– or number buttons to select the TV program.

For double digit numbers, press -/--, then the number (e.g., for 25, press -/--, then 2 and 5).

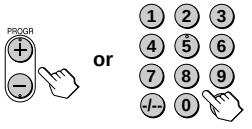

3 Press ◿ +/– to adjust the volume.

continued

Additional tasks

To	Do this
Turn off temporarily	Press ⏻. The ⏻ indicator on the TV lights up red.
Turn off completely	Press ⏻ on the TV.
Mute the sound	Press 🔇.
Watch the video input (VCR, camcorder, etc.)	Press ⇥ to select "VIDEO 1", "VIDEO 2" and "VIDEO 3". To return to the TV program, press ▢.
Jump back to the previous channel	Press JUMP.
Display the on-screen information*	Press ⓘ.

* The picture, sound, and either the program number or video mode are displayed. The on-screen display for the picture and sound information disappears after about 3 seconds.

Changing the menu language

You can change the menu language as well as the on-screen language.

For details on how to use the menu, see "How to use the menu" on page 20.

1 Press MENU.

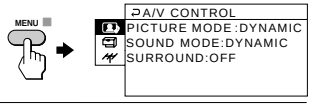

2 Press + or – to select the SET UP icon (), then press ENTER.

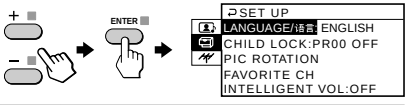

3 Make sure "LANGUAGE/语言" is selected, then press ENTER.

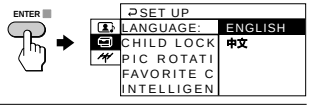

4 Press + or – to select "中文", then press ENTER.

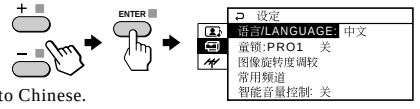

The menu language changes to Chinese.

To return to the normal screen

Press MENU.

Setting the Wake Up timer

1 Press ◷ until the desired period of time appears.

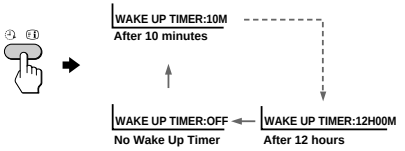

2 Select the TV program or video mode you want to display when you wake up.

3 Press ⏻ or set the Sleep timer if you want the TV to turn off automatically.

The ◷ indicator on the TV lights up orange.

To cancel the Wake Up timer

Press ◷ until "WAKE UP TIMER: OFF" appears or turn off the TV's main power.

Notes

- The Wake Up timer starts immediately after the on-screen display disappears.
- If no buttons or controls are pressed for more than two hours after the TV is turned on using the Wake Up timer, the TV automatically goes into the standby mode. To continue watching the TV, press any button or control on the TV or the remote.

Setting the Sleep timer

Press ◷ until the desired period of time appears.

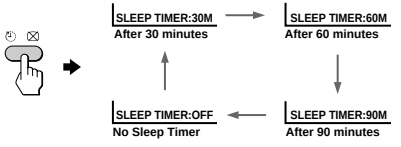

To cancel the Sleep timer

Press ◷ until "SLEEP TIMER: OFF" appears or turn the TV off.

Selecting the picture and sound modes

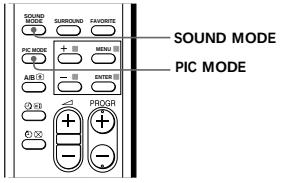

You can select picture and sound modes and adjust the setting to your preference in PERSONAL option.

Selecting the picture mode

Press PIC MODE repeatedly until you get the desired picture mode.

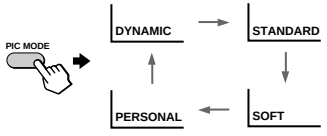

Select	To
DYNAMIC	receive high contrast pictures.
STANDARD	receive normal contrast pictures.
SOFT	receive mild pictures.
PERSONAL	receive the last adjusted picture setting from the ADJUST option in the A/V CONTROL menu (see page 22).

Selecting the sound mode

Press SOUND MODE repeatedly until you get the desired sound mode.

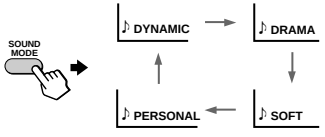

Select	To
DYNAMIC	listen to dynamic and clear sound that emphasizes the low and high tones.
DRAMA	listen to sound that emphasizes voice and high tones.
SOFT	receive soft sound.
PERSONAL	receive the last adjusted sound setting from the ADJUST option in the A/V CONTROL menu (see page 22).

Tip

- You can also set the picture and sound modes using the menu (see "Changing the A/V CONTROL setting" on page 21).

Viewing your favorite channels

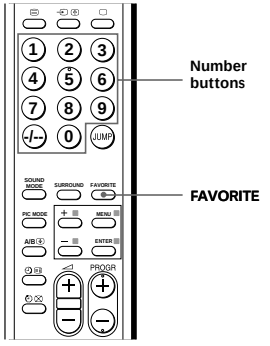

You can display and select six of your favorite channels directly from your TV screen.

1 Press FAVORITE.

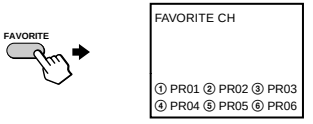

2 Press the number button from 1 to 6 to select the desired channel.

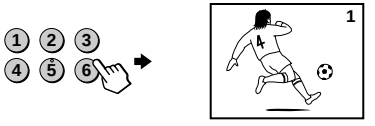

Tip

- To program your favorite channels, see "Programming your favorite channels" on page 23.

Listening with surround sound

The surround feature enables you to enjoy the sound effects of a concert hall or movie theater.

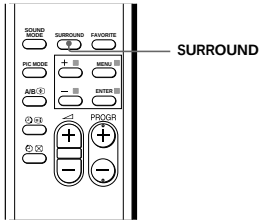

Press SURROUND repeatedly until you receive the desired surround sound.

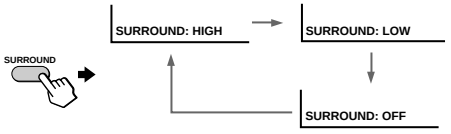

Select	To
HIGH	listen to sound that spreads out over a large area, giving the feeling of being at a concert hall.
LOW	listen to the sound that gives the feeling of being at a live concert.
OFF	turn off the surround sound.

The surround of your TV is categorized as TruSurround.

TruSurround™ is a trademark of SRS Labs, Inc. SRS and the SRS symbol are registered trademarks of SRS Labs, Inc. in the United States and selected foreign countries. SRS and TruSurround are incorporated under license from SRS Labs, Inc. and are protected under United States Patent Nos. 4,748,669 and 4,841,572 with numerous additional issued and pending foreign patents.

Introducing the menu system

The MENU button lets you open a menu and change the settings of your TV. Here's an overview of the menu system.

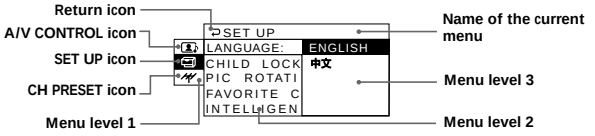

Level 1	Level 2	Level 3/Function
A/V CONTROL	PICTURE MODE	Select the picture mode. DYNAMIC → STANDARD → SOFT → PERSONAL → ADJUST
	ADJUST	Adjust the PERSONAL option. PICTURE→COLOR→BRIGHT→HUE→SHARP
	SOUND MODE	Select the sound mode. DYNAMIC → DRAMA → SOFT → PERSONAL → ADJUST
	ADJUST	Adjust the PERSONAL option. BASS→TREBLE→BALANCE→BBE*
	SURROUND	Select the surround mode. HIGH→ LOW→OFF
SET UP	LANGUAGE/ 语言	Change the menu language. ENGLISH - 中文 (Chinese)
	CHILD LOCK	Lock the channel independently.
	PIC ROTATION	Adjust the picture position.
	FAVORITE CH	Program favorite channels.
	INTELLIGENT VOL	Adjust volume automatically.
CH PRESET	AUTO PROGRAM	Preset channels automatically.
	MANUAL PROGRAM	Preset channels manually.
	SKIP	Skip unwanted or unused program positions.
	TV SYS	Select the TV system. B/G→ I→ D/K→ M
	COL SYS	Select the color system. AUTO→PAL→SECAM→NTSC3.58→NTSC4.43

* The BBE is manufactured by Sony Corporation under license from BBE Sound, Inc. It is covered by U.S. Patent No. 4,638,258 and No. 4,482,866. The word "BBE" and the BBE symbol are the trademarks of BBE Sound, Inc.

How to use the menu

You can use the buttons on the remote and on the TV as well to display the menu and adjust the settings.

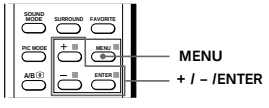

1 Press MENU to display the menu.

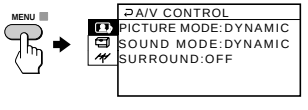

2 Press + or – to select the desired item.

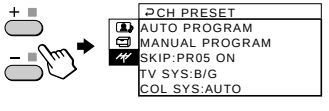

3 Press ENTER to confirm your option and go to the next menu level.

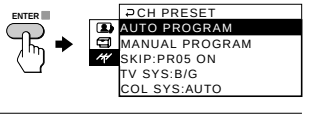

Other menu operations

To	Press
Adjust the setting value	+ / –
Return to the pervious menu level*	ENTER
Cancel the menu	MENU

* To return from Menu Level 2 to Level 1, press + / – to select the return icon ( ), then press ENTER.

Tips

- If more than 60 seconds elapse between entries, the menu screen disappears.
- You can also use the buttons on the TV for menu operations + / – work as + / – on the remote and works as ENTER on the remote.

Front of TV

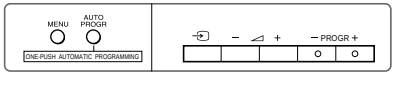

Changing the A/V CONTROL setting

The A / V CONTROL menu allows you to change the picture and sound settings.

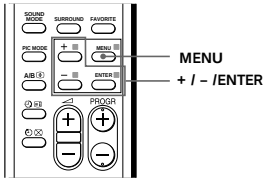

1 Press MENU.

2 Make sure the A/V CONTROL icon ( ) is selected, then press ENTER.

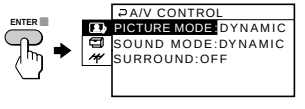

3 Press + or – to select either PICTURE MODE, SOUND MODE, or SURROUND, then press ENTER.

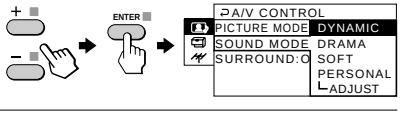

4 Press + or – to select the desired option, then press ENTER.

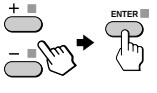

For	Select
PICTURE MODE	either DYNAMIC, STANDARD, SOFT, PERSONAL*, or ADJUST.
SOUND MODE	either DYNAMIC, DRAMA, SOFT, PERSONAL*, or ADJUST.
SURROUND	either HIGH, LOW, or OFF.

* When the PERSONAL mode is selected, the last adjusted picture and sound settings from the ADJUST option are received (see next page).

Tip

- For details on the options under “PICTURE MODE”, “SOUND MODE” and “SURROUND”, see page 12 and 14 respectively.

To return to the normal screen

Press MENU.

continued

Changing the A/V CONTROL setting (continued)

Adjusting the ADJUST options under PICTURE MODE

1 Press + or – to select the desired item (e.g., COLOR), then press ENTER.

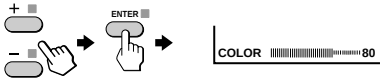

2 Adjust the value according to the following table, then press ENTER.

For	Press – to	Press + to
PICTURE	decrease picture contrast	increase picture contrast
COLOR	decrease color intensity	increase color intensity
BRIGHT	darken the picture	brighten the picture
HUE*	increase red picture tones	increase green picture tones
SHARP	soften the picture	sharpen the picture

* You can adjust HUE for the NTSC color system only.

3 Repeat the above steps to adjust other items.

The adjusted settings will be received when you select PERSONAL.

Adjusting the ADJUST options under SOUND MODE

1 Press + or – to select the desired item (e.g., BALANCE), then press ENTER.

2 Adjust the value according to the following table, then press ENTER.

For	Press – to	Press + to
BASS	decrease the bass	increase the bass
TREBLE	decrease the treble	increase the treble
BALANCE	increase the left speaker's volume	increase the right speaker's volume
BBE	select "HIGH" for higher enhancement of sound clarity; select "LOW" for lower enhancement of sound clarity; select "OFF" to turn off the BBE sound	

3 Repeat the above steps to adjust other items.

The adjusted settings will be received when you select PERSONAL.

Tip

- For details on the menu system and how to use the menu, refer to "Introducing the menu system" on page 19 and "How to use the menu" on page 20.

Changing the SET UP setting

The SET UP menu allows you to change the menu language, lock channels, adjust the picture position, program your favorite channels and adjust volume automatically.

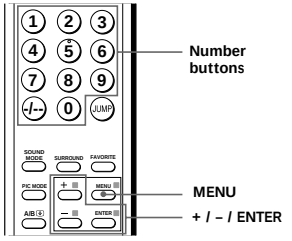

Programming your favorite channels

The FAVORITE CH feature enables you to program up to six channels for direct selection.

1 Press MENU.

2 Press + or – to select the SET UP icon (), then press ENTER.

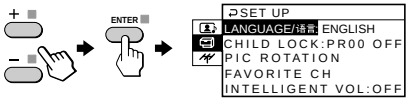

3 Press + or – to select FAVORITE CH, then press ENTER twice.

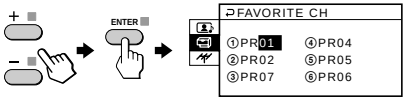

4 Press + or –, or number buttons to program the desired channel (e.g., PR03), then press ENTER.

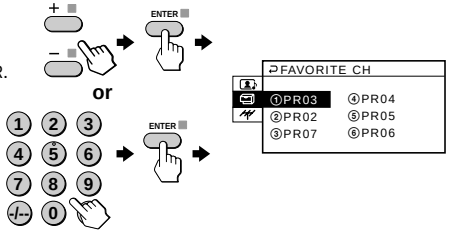

5 To continue programming other favorite channels, press + or – and then press ENTER. After that, repeat step 4.

To return to the normal screen

Press MENU.

continued

Changing the SET UP setting (continued)

Using the CHILD LOCK feature

You can prevent your children from watching certain programs by using the CHILD LOCK feature.

1 Press MENU.

2 Press + or – to select the SET UP icon (), then press ENTER.

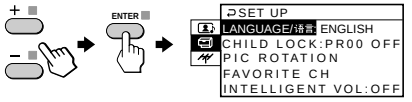

3 Press + or – to select CHILD LOCK, then press ENTER.

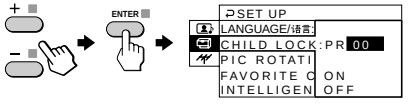

4 Press + or –, or number buttons to select the desired channel, then press ENTER.

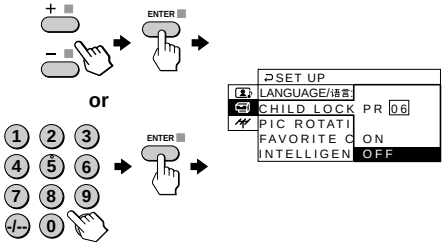

5 Press + or – to select "ON", then press ENTER.

The lock symbol ( ) appears on the screen.

To unlock the channel, select "OFF".

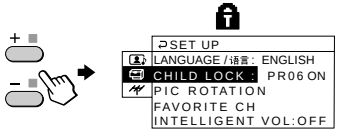

6 To continue locking other channels, press ENTER and then repeat step 4 to 5.

To return to the normal screen

Press MENU.

Changing other SET UP menu options

1 Press MENU.

2 Press + or – to select the SET UP icon (), then press ENTER.

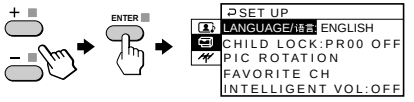

3 Press + or – to select the desired option (e.g., INTELLIGENT VOL), then press ENTER.

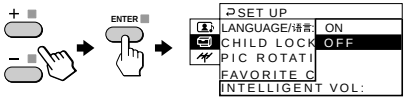

Select	To
LANGUAGE	Change the menu language (see "Changing the menu language" on page 10).
CHILD LOCK	Prevent children from watching certain programs (see "Using the CHILD LOCK feature" on page 24).
PIC ROTATION	Adjust the picture position when it is not aligned to the TV screen. Press + or – to adjust the picture position, then press ENTER.
FAVORITE CH	Program channels for direct selection (see "Programming your favorite channels" on page 23).
INTELLIGENT VOL	Adjust the volume of each TV program automatically. Press + or – to select "ON", then press ENTER. To turn off the Intelligent Volume function, select "OFF", then press ENTER.

To return to the normal screen.

Press MENU.

Tip

- For details on the menu system and how to use the menu, refer to "Introducing the menu system" on page 19 and "How to use the menu" on page 20.

Changing the Channel Preset (CH PRESET) setting

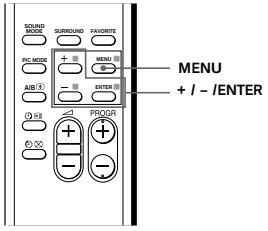

The CH PRESET menu allows you to adjust the setup of your TV. For example, you can receive a channel with a weak signal that fails to be tuned in by automatic presetting.

Presetting channels manually

1 Press MENU.

2 Press + or – to select the CH PRESET icon (), then press ENTER.

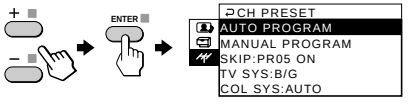

3 Press + or – to select MANUAL PROGRAM, then press ENTER.

4 Select the program number to which you want to preset a channel.

(1) Make sure "PR" is selected , then press ENTER.

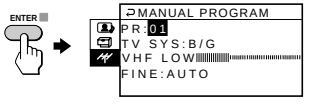

(2) Press + or – until the program number you want to preset (e.g., program number 10) appears on the menu, then press ENTER.

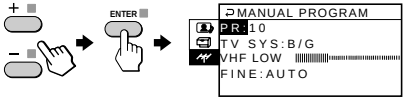

5 Select the desired channel.

(1) Press + or – to select either VHF LOW, VHF HIGH or UHF, then press ENTER.

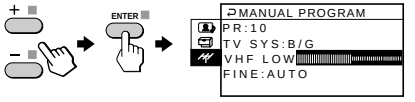

(2) Press + or – until the desired channel picture appears on the TV screen, then press ENTER.

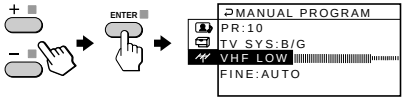

6 If the sound of the desired channel is abnormal, select the appropriate TV system.

(1) Press + or – to select TV SYS, then press ENTER.

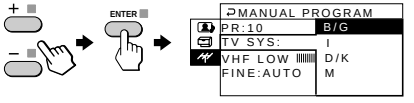

(2) Press + or – until the sound becomes normal (e.g., M), then press ENTER.

continued

Changing the Channel Preset (CH PRESET) setting (continued)

7 If you are not satisfied with the picture and sound quality, you may improve them by using fine tuning.

(1) Press + or – to select FINE, then press ENTER.

(2) Press + or – to select MANUAL, then press ENTER.

(3) Press + or – until you are satisfied with the picture and sound quality, then press ENTER.

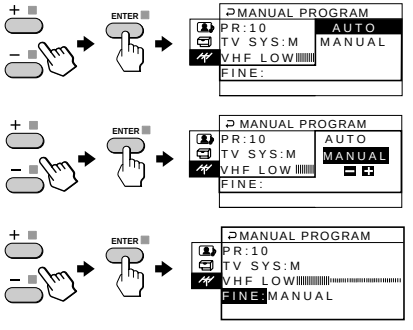

To return to the normal screen

Press MENU.

Note

- The TV system (TV SYS) and the fine tuning (FINE) settings are memorized for each program number.

Changing other CH PRESET menu options

1 Press MENU.

2 Press + or – to select the CH PRESET icon (), then press ENTER.

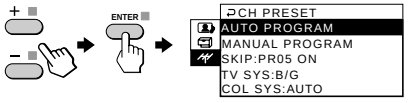

3 Press + or – to select the desired option (e.g., SKIP), then press ENTER.

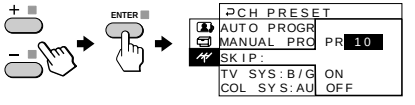

Select	To
AUTO PROGRAM	preset channels automatically.
MANUAL PROGRAM	preset channels manually. See “Presetting channels manually” on page 26 and 27.
TV SYS	select the TV system. See “Presetting channels manually” on page 27.
COL SYS	select the color system. Normally, set this to “AUTO”.
SKIP	skip unwanted or unused program numbers. 1 Press + or – until the unused or unwanted program number appears, then press ENTER. 2 Press + or – to select “ON”, then press ENTER. To put the skipped program number back on, select “OFF”, then press ENTER.

Tip

- For details on the menu system and how to use the menu, refer to “Introducing the menu system” on page 19 and “How to use the menu” on page 20.

Note

- If you preset a locked channel, that particular channel will be unlocked automatically.

Self-diagnosis function

Your TV is equipped with a self-diagnosis function. If there is a problem with your TV, the ⏻ indicator flashes red. The number of times the ⏻ indicator flashes indicates the possible causes.

Front of TV

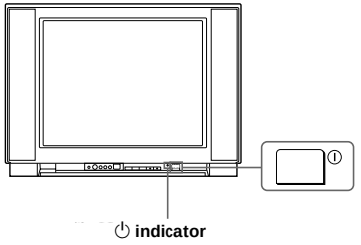

1 Check that the ⏻ indicator flashes red a number of times between 3-second intervals.

2 Count the number of times the ⏻ indicator flashes.

3 Press ⏀ (main power) to turn off your TV.

4 Inform your nearest Sony service center about the number of times the ⏻ indicator flashes.
Be sure to note the model name and serial number located on the rear of your TV.

Troubleshooting

If you find any problem while viewing your TV, please check the following guide. If any problem persists, contact your Sony dealer .

Symptom	Solutions	Possible cause
Snowy picture Noisy sound	• Check the antenna cable and connection on the TV, VCR and on the wall. (page 4)	• Connection is loose or the cable is damaged.
	• Display the CH PRESET menu and select "MANUAL PROGRAM" to preset the channel again. (page 26)	• Channel presetting is inappropriate or incomplete.
	• Check the antenna type (VHF / UHF). Contact a Sony dealer for advice.	• The antenna type is inappropriate.
	• Adjust the antenna direction. Contact a Sony dealer for advice.	• The antenna direction is inappropriate.
	• Try using a booster.	• Signal transmission is low.
Distorted picture Noisy sound	• Turn off or disconnect the booster if it is in use.	• Broadcast signals are too strong.
Good picture Noisy sound	• If the sound of all the channels are noisy, display the CH PRESET menu and check the TV system (TV SYS) setting (page 27), then select "AUTO PROGRAM" to preset the channels again. (page 29) • If the sound of some channels is noisy, select the channel, then display the CH PRESET menu and select the appropriate TV system (TV SYS). (page 27)	• The TV system setting or channel presetting is inappropriate or incomplete.
No picture No sound	• Check the power cord, antenna and the VCR connections.	• The power cord, antenna or VCR is not connected.
	• Press ⏻ (power). • Press ⏀ (main power) on the TV to turn off the TV about five seconds, then turn it on again.	• The TV is not turned on.

continued

Troubleshooting (continued)

Symptom	Solutions	Possible cause
Good picture	• Press ◿ + to increase the volume level.	• The volume level is too low.
	• Press 🔇 to cancel the muting.	• The sound is muted.
No sound	• Press A / B ⊕ until a better sound is heard. (KV-XF25M65 / XF29M65 only)	• Broadcast signal has a transmission problem.
Dotted lines or stripes 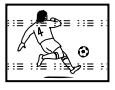	• Do not use a hair dryer or other equipment near the TV. • Adjust the antenna direction for minimum interference. Contact a Sony dealer for advice.	• There is local interference from cars, neon signs, hair dryers, power generators, etc.
Double images or "ghosts"	• Use a highly directional antenna. • Use the fine tuning (FINE) function. (page 28).	• Broadcast signals are reflected by nearby mountains or buildings.
	• Adjust the antenna direction. Contact a Sony dealer for advice.	• The antenna direction is inappropriate.
	• Turn off or disconnect the booster if it is in use.	• Use of a booster is inappropriate.
No color	• Display the A / V CONTROL menu and select "ADJUST" of PICTURE MODE, then adjust the COLOR level. (page 21 and 22)	• The color level setting is too low.
	• Display the CH PRESET menu and check the color system (COL SYS) setting (usually set this to AUTO). (page 29)	• The color system setting is inappropriate.
	• Adjust the antenna direction. Contact a Sony dealer for advice.	• The antenna direction is inappropriate.
Abnormal color patches	• Keep external speakers or other electrical equipment away from the TV. Do not move the TV while the TV is turned on. Press ⏻ (main power) on the TV to turn off the TV for about five minutes, then turn it on again.	• The magnetic disturbance from external speakers or other equipment, or the direction of the earth's magnetic field may affect the TV.
TV cannot receive stereo broadcast signal (not used for this model)	• Press A / B ⊕ until "AUTO" appears on the screen.	• The stereo reception setting is inappropriate.

Symptom	Solutions	Possible cause
Stereo broadcast sound switches on and off or is distorted. **or** **The sound switches between monaural and stereo frequently.** **(not used for this model)**	• Check the antenna cable and connection on the TV, VCR and on the wall. (page 4)	• Connection is loose or the cable is damaged.
	• Adjust the antenna direction.Contact a Sony dealer for advice.	• The antenna direction is inappropriate.
	• Press A / B ⊕ until a better sound is heard.	• Broadcast signal has a transmission problem.
"100" appears on the top of the screen and no Teletext display. (not used for this model)	—	• The channel carries no Teletext broadcast.
Teletext display is incomplete (picture snowy or double images). (not used for this model)	• Check the antenna cable and connection on the TV, VCR and on the wall. (page 4)	• Connection is loose or the cable is damaged.
	• Adjust the antenna direction. Contact a Sony dealer for advice.	• The antenna direction is inappropriate.
	• Try using a booster. • Use the fine tuning (FINE) function. (page 28)	• Signal transmission is too low.
Picture slant	• Display the SET UP menu and adjust "PIC ROTATION" so that the picture is aligned to the TV screen. (page 25)	• The terrestrial magnetism affects your TV set.
Lines moving across the TV screen.	• Use the fine tuning (FINE) function. (page 28)	• There is interference from external sources, e.g., heavy machineries, nearby broadcast station.
The ⏻ indicator flashes red a number of times between 3-second intervals.	• Contact your nearest Sony service center. (page 30)	• Your TV may need service.
TV cabinet creaks.	—	• Changes in room temperature sometimes make the TV cabinet expand or contract, making a noise. This does not indicate a malfunction.
A "boom" sound is heard when the TV is turned on.	—	• The TV's demagnetizing function is working. This does not indicate a malfunction.

Identifying parts and controls

Refer to the pages indicated in parentheses ( ) for details.

Front panel

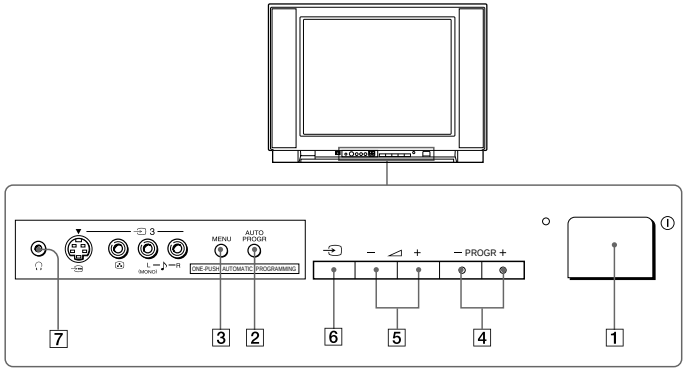

1 ⏻ (main power) button (9)
2 AUTO PROGR (program) button (5)
3 MENU button (20)
4 PROGR +/– (program) buttons (9)
5 ◿ +/– (volume) buttons (9)
6 ⊖ (TV/video) button (10)
7 🎧 (headphones) jack

Remote Control

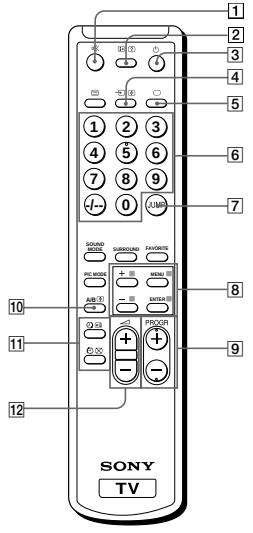

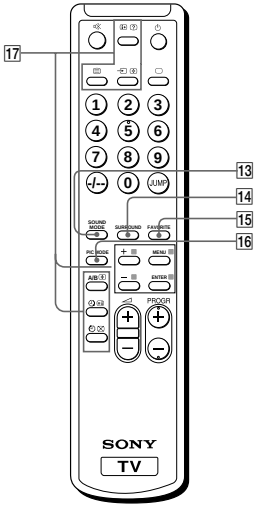

1 🔇 (muting) button (10)
2 ⓘ (display) button (10)
3 ⏻ (power) button (9)
4 ⊖ (video) button (10)
5 ▢ (TV) button (10)
6 Number buttons (9)
7 JUMP button (10)
8 Menu operation buttons (20)
MENU button
+ or – buttons
ENTER button
9 PROGR +/– button (9)
10 A/B button (15)
(not used for this model)
11 Timer setting buttons (11)
(wake up timer)
(sleep timer)
12 ◿ (volume) +/– buttons (9)

13 SOUND MODE button (12)
14 SURROUND button (14)
15 FAVORITE button (13)
16 PIC MODE button (12)
17 Teletext operation buttons (17, 18)
(not used for this model)
(text) (enlarge)
(reveal) (hold)
(index) (text clear)
■ (FASTEXT: red, green, yellow, blue)

Names / symbols of buttons on the remote are indicated in different colors to represent the available functions.

Label color	Button function
White	For general TV operations
Green	For Teletext operations

SECTION 2
DISASSEMBLY

2-1. REAR COVER REMOVAL

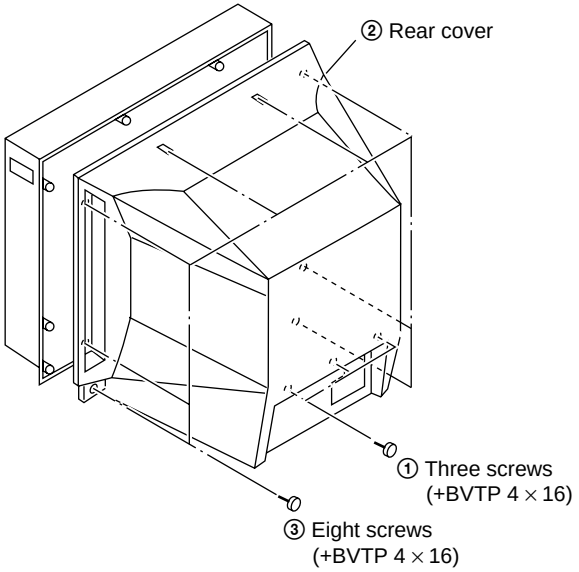

2-2. CHASSIS ASSY REMOVAL

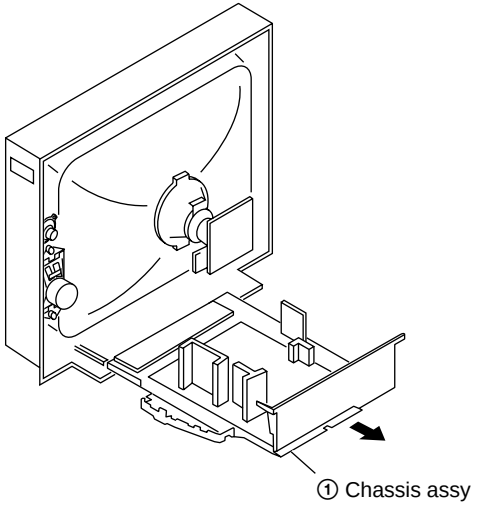

2-3. F BRACKET REMOVAL

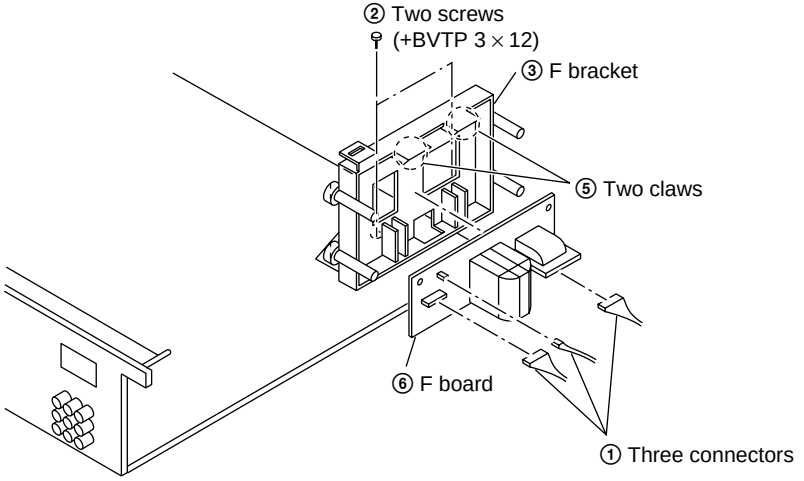

2-4. SERVICE POSITION
(Note: Remove F Bracket first.)

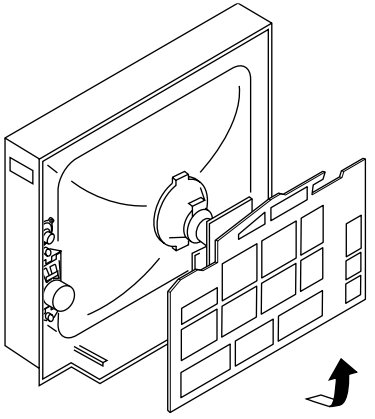

2-5. REPLACEMENT OF PARTS

For replacement of the Control Button and Light Guide, unscrew them, exchange with the new parts, and fix them with screws (+BVTP) respectively.

2-5-1. REPLACEMENT OF CONTROL BUTTON

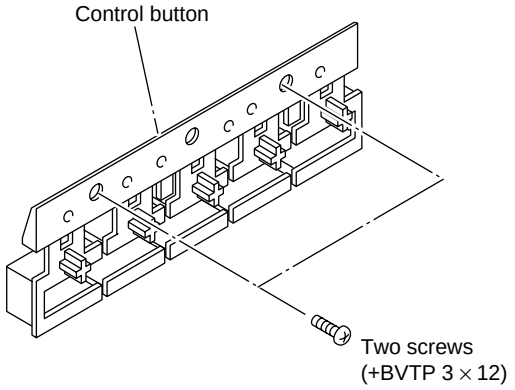

2-5-2. REPLACEMENT OF LIGHT GUIDE

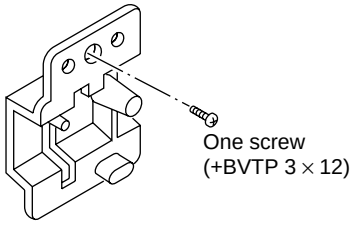

2-6. TERMINAL BRACKET REMOVAL

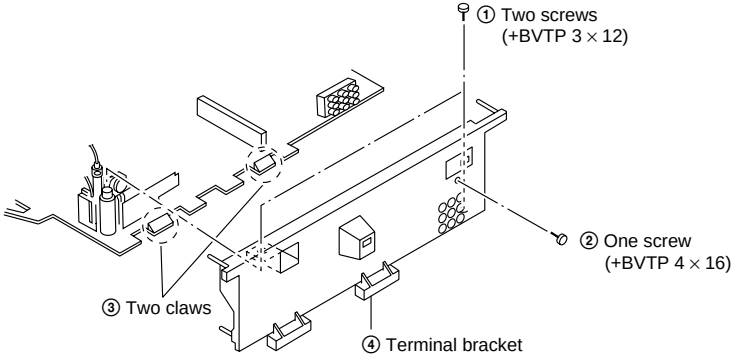

2-7. H3 BOARD REMOVAL

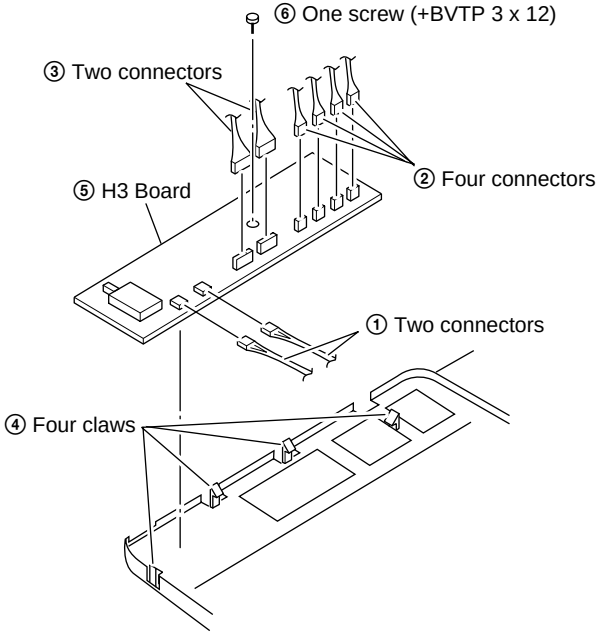

2-8. A AND B3 BOARDS REMOVAL

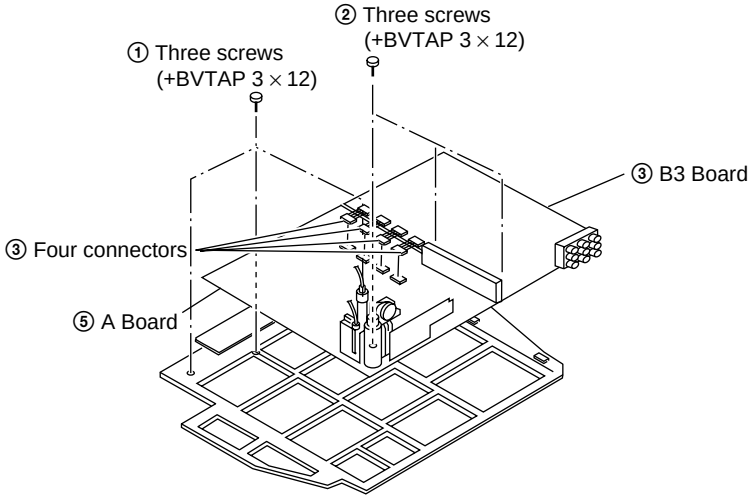

2-9. PICTURE TUBE REMOVAL

***Note: The picture tube for Indonesia model is upside down, and the position for anode cap and tension springs are changed accordingly.**

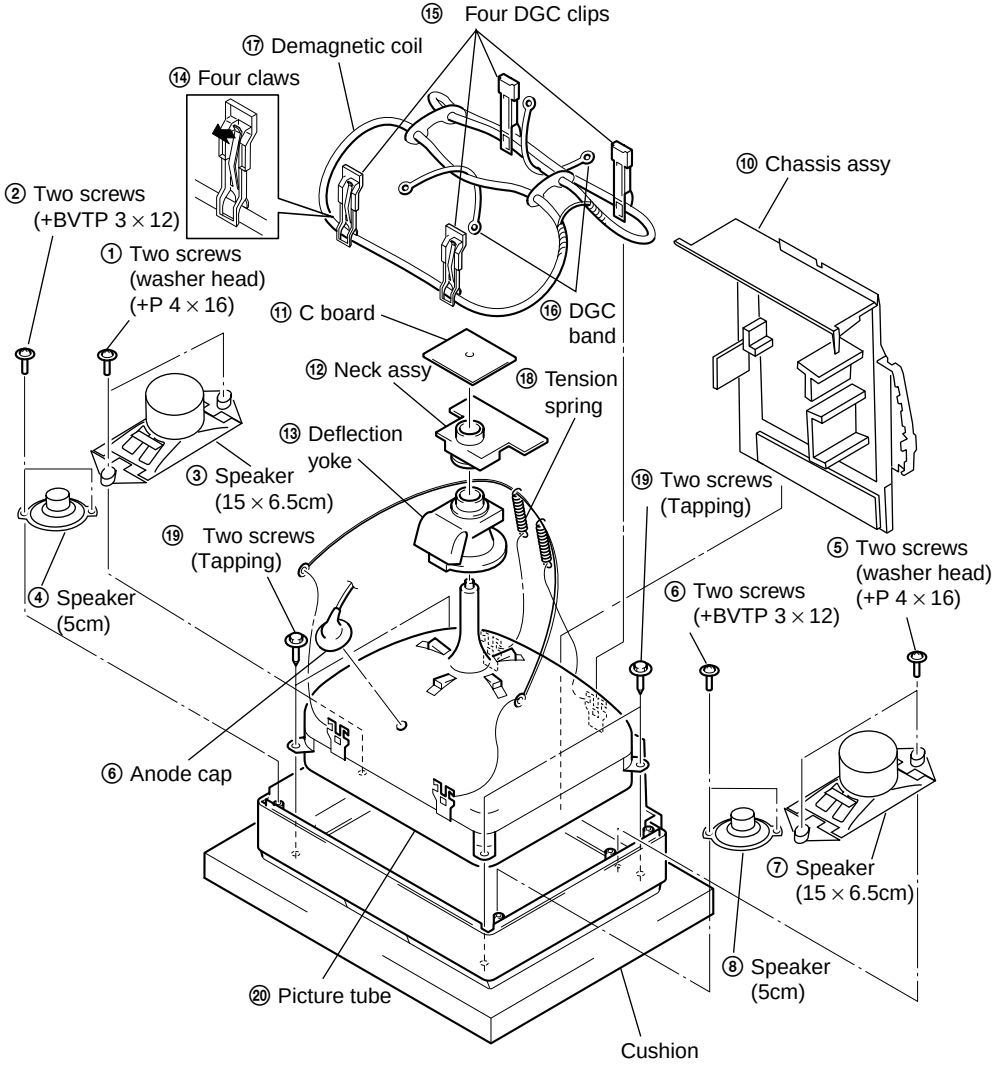

• REMOVAL OF ANODE-CAP

NOTE : After removing the anode, short circuit the anode of the picture tube and the anode cap to the metal chassis, CRT shield or carbon paint on the CRT.

• REMOVING PROCEDURES

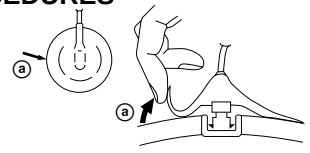

① **Turn up one side of the rubber cap in the direction indicated by the arrow ⓐ.**

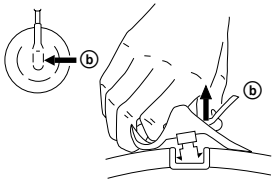

② **Using a thumb pull up the rubber cap firmly in the direction indicated by the arrow ⓑ.**

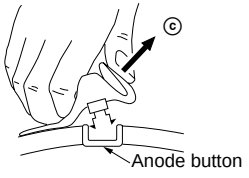

③ **When one side of the rubber cap is separated from the anode button, the anode-cap can be removed by turning up the rubber cap and pulling it up in the direction of the arrow ⓒ.**

• HOW TO HANDLE AN ANODE-CAP

① **Do not damage the surface of anode-caps with sharp shaped objects.**
② **Do not press the rubber too hard so as not to damage the inside of anode-cap. A metal fitting called the shatter-hook terminal is built into the rubber.**
③ **Do not turn the foot of rubber over too hard. The shatter-hook terminal will stick out or damage the rubber.**

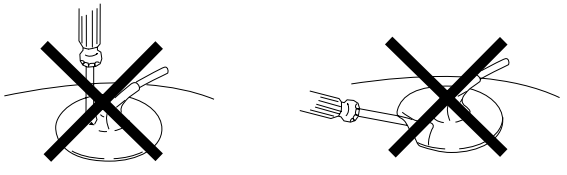

SECTION 3
SET-UP ADJUSTMENTS

- The following adjustments should be made when a complete realignment is required or a new picture tube is installed.
- These adjustments should be performed with rated power supply voltage unless otherwise noted.

Controls and switches should be set as follows unless otherwise noted:
PICTURE control ..... normal
BRIGHTNESS control ..... normal

Perform the adjustments in the following order :
1. Beam Landing
2. Convergence
3. Focus
4. White Balance

Note : Test Equipment Required.
1. Color-bar/Pattern Generator
2. Degausser
3. Oscilloscope

Preparation :
- In order to reduce the influence of geomagnetism on the set's picture tube, face it east or west.
- Switch on the set's power and degauss with the degausser.

3-1. BEAM LANDING

1. Input a white signal with the pattern generator.
   Contrast } normal
   Brightness
2. Position neck assy as shown in Fig3-2.
3. Set the pattern generator raster signal to a green raster.
4. Move the deflection yoke to the rear and adjust with the purity control so that the green is at the center and the blue and the red take up equally sized areas on each side.
   (See Figures 3-1 through 3-4.)
5. Move the deflection yoke forward and adjust so that the entire screen is green. (See Figure 3-2.)
6. Switch the raster signal to blue, then to red and verify the condition.
7. When the position of the deflection yoke has been decided, fasten the deflection yoke with the screws and DY spacers.
8. If the beam does not land correctly in all the corners, use a magnet to adjust it.
   (See Figure 3-5.)

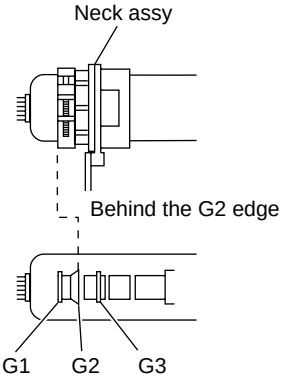

Fig. 3-1

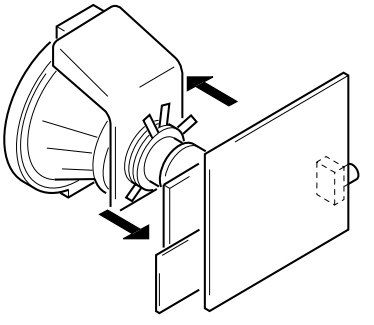

Fig. 3-2

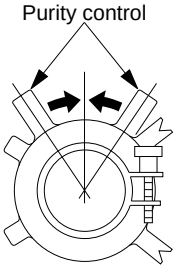

Fig. 3-3

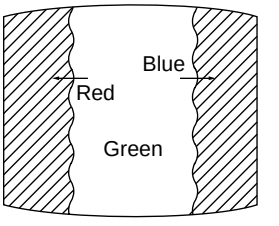

Fig. 3-4

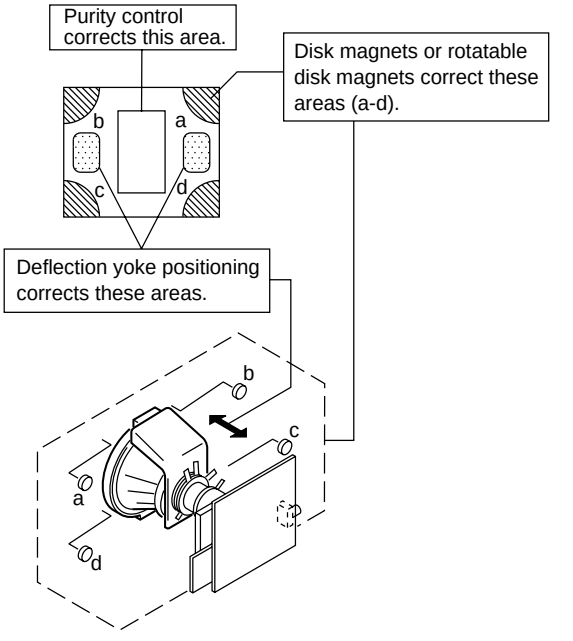

Fig. 3-5

3-2. CONVERGENCE

Preparation :

- Before starting this adjustment, adjust the focus, horizontal size and vertical size.
- Minimize the brightness setting.
- Provide dot pattern.

(1) Horizontal and Vertical Static Convergence

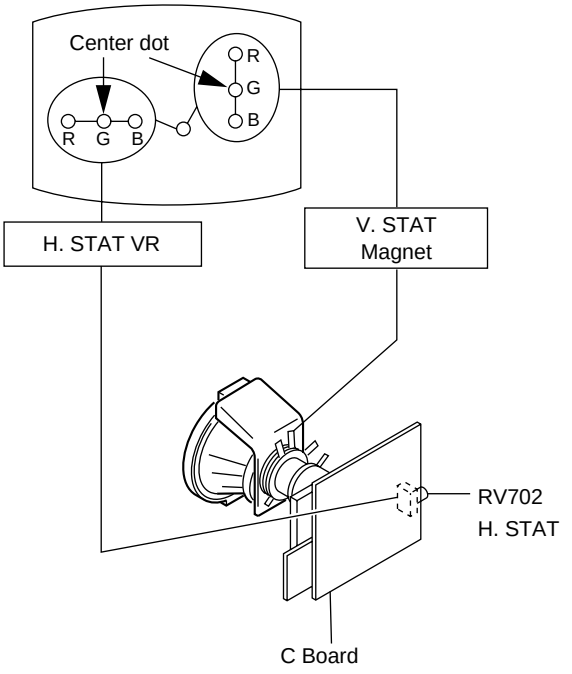

1. (Moving horizontally), adjust the H.STAT control so that the red, green and blue dots are on top of each other at the center of the screen.
2. (Moving vertically), adjust the V.STAT magnet so that the red, green and blue dots are on top of each other at the center of the screen.
3. If the H.STAT variable resistor cannot bring the red, green and blue dots together at the center of the screen, adjust the horizontal convergence with the H.STAT variable resistor and the V.STAT magnet in the manner given below.
   (In this case, the H.STAT variable resistor and the V.STAT magnet influence each other, so be sure to perform adjustments while tracking.)

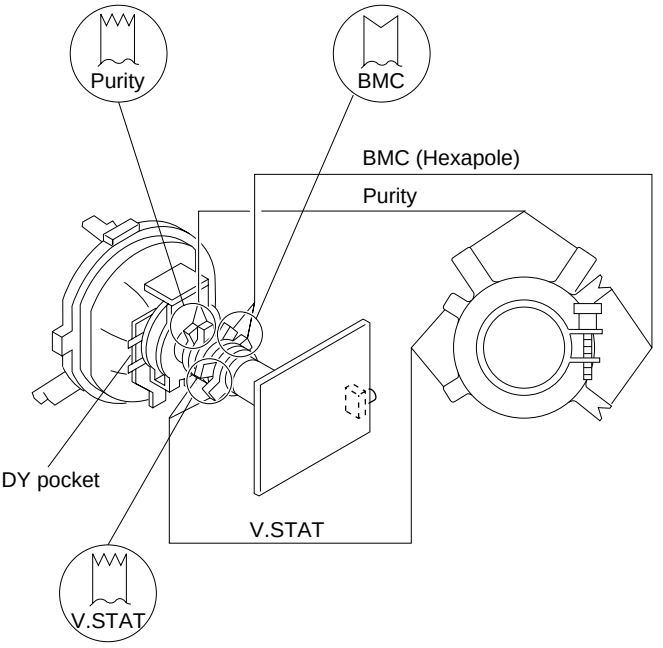

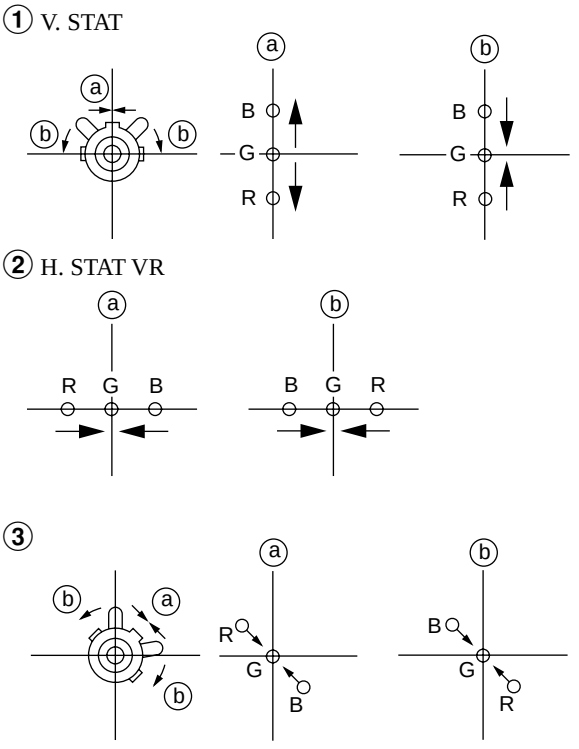

④ BMC (Hexapole) Magnet.

If the red, green and blue dots are not balanced or aligned, then use the BMC magnet to adjust in the manner described below.

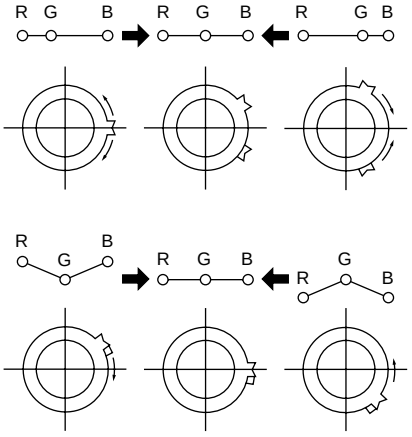

⑤ Y separation axis correction magnet adjustment.

1. Receive the cross-hatch signal and adjust [PICTURE] to [MIN] and [BRIGHTNESS] to [STANDARD].

2. Adjust the Y separation axis correction magnet on the neck assembly so that the horizontal lines at the top and bottom of the screen are straight.

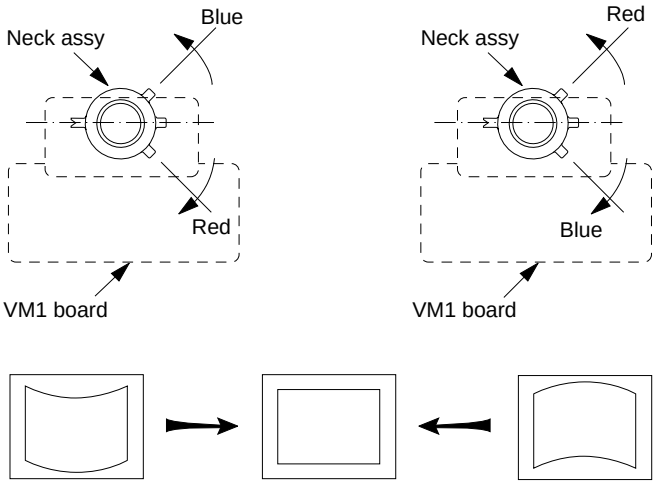

Note

1. The Red and Blue magnets should be equally far from the horizontal center line.
2. Do not separate the Red and Blue magnets too far. (Less than 8 mm)

(2) Dynamic Convergence Adjustment

Preparation:

- Before starting this adjustment, adjust the horizontal static convergence and the vertical static convergence

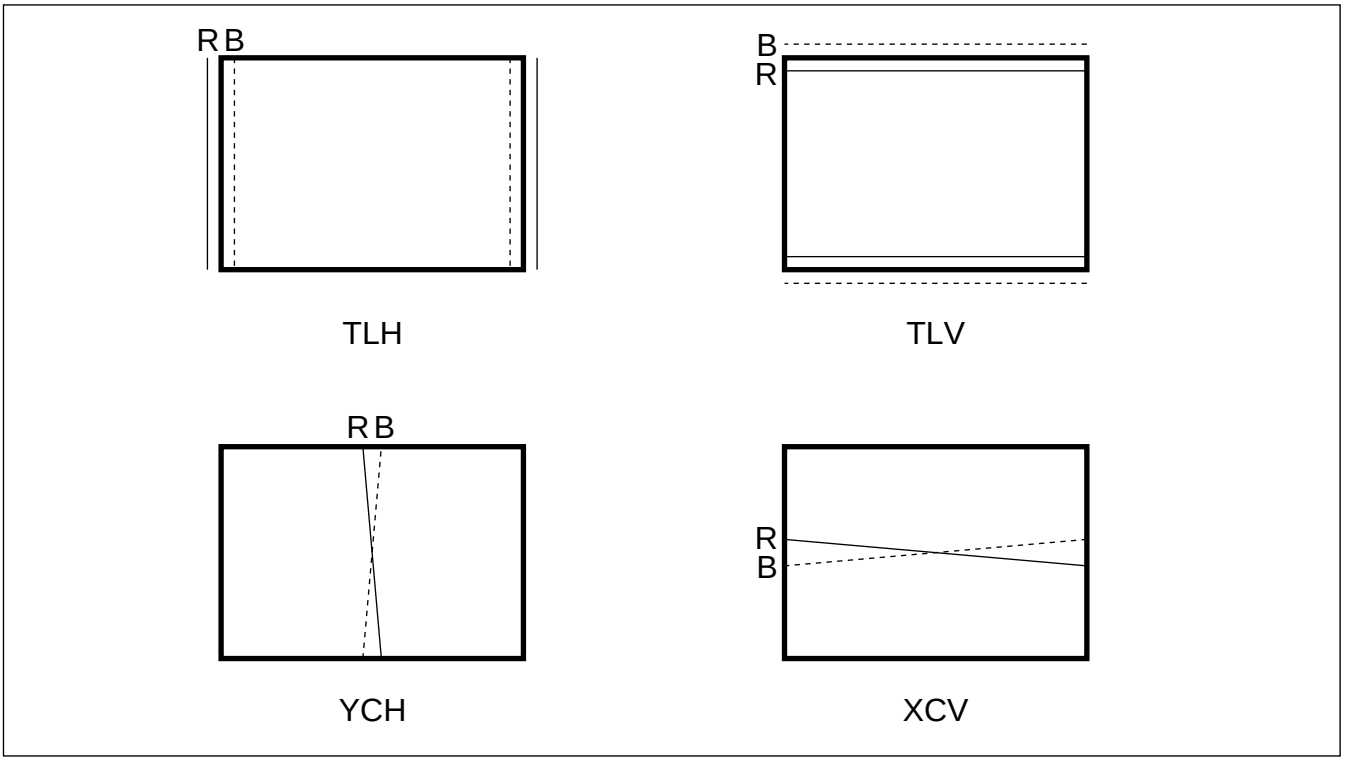

TLV	Rotate	TLV-2	VOL (29”, 34”) on DY
	Rotate	TLV	VOL (25”) on DY
XCV	Rotate	XCV	Adj core on DY
YCH	Rotate	YCH	VOL on DY
TLH	Insert	TLH	Correction Plate to DY Pocket (Left or Right)

ON DY:

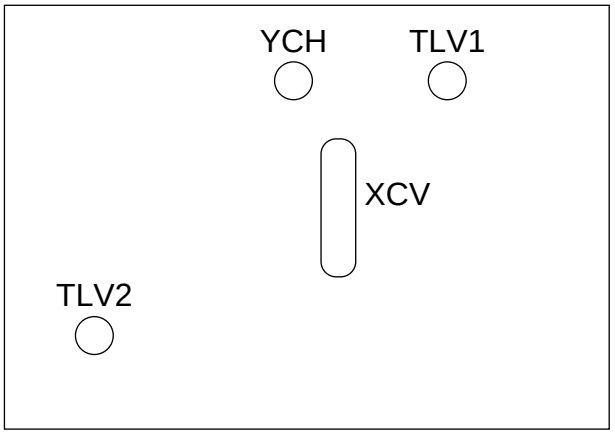

(3) Screen-corner Convergence

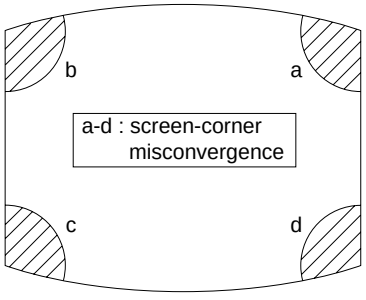

Fix a Permalloy assy corresponding to the misconverged areas.

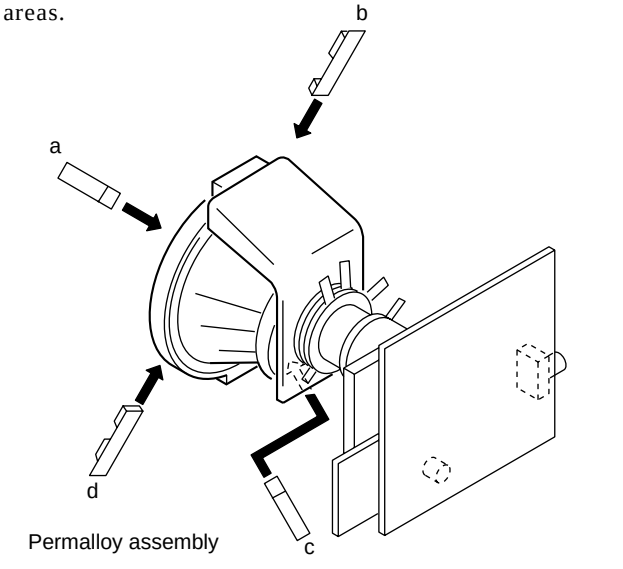

3-3. FOCUS ADJUSTMENT

Adjust FOCUS control on the flyback transformer for the best focus.

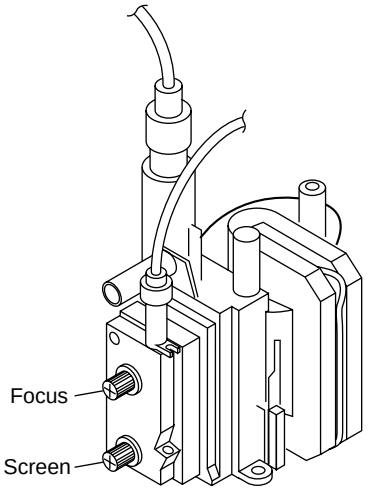

FLYBACK TRANSFORMER (T503)

3-4. G2 (SCREEN) AND WHITE BALANCE ADJUSTMENTS

1. G2 (SCREEN) ADJUSTMENT

1) Set the PICTURE to normal.
2) Put to VIDEO input mode without signals.
3) Connect R, G and B of the C board cathode to the oscilloscope.
4) Adjust BRIGHTNESS to obtain the cathode voltage to the value below.
5) Adjust G2 (screen) on the FBT until picture shows the point before cut off.

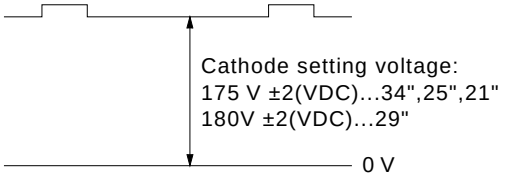

2. WHITE BALANCE ADJUSTMENT

1) Set to Service Mode (Refer Section 4-1: ADJUSTMENTS WITH COMMANDER).
2) Input white raster signal.
3) Set the PICTURE to minimum.
4) Select GCT (WHB 4) and BCT (WHB 5) with [1] and [4], and adjust the level with [3] and [6] for the best white balance.
5) Set the PICTURE to maximum.
6) Select GDR (WHB 1) and BDR (WHB 2) with [1] and [4], and adjust the level with [3] and [6] for the best white balance.
7) Write into the memory by pressing [MUTING] then [0].

3. SUB BRIGHT ADJUSTMENT

1) Set to service mode.
2) Input a staircase signal of black to white from the pattern generator.
3) BRIGHTNESS .... 50%.
   PICTURE ..... MINIMUM
4) Select SBR (WHB7) with [1] and [4], and adjust SBR (WHB7) level with [3] and [6] so that the second stripe from the right is dimly lit.

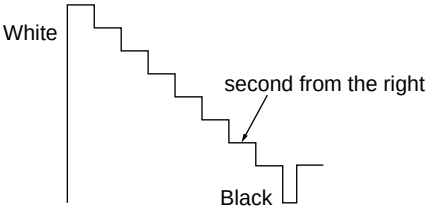

SECTION 4
CIRCUIT ADJUSTMENTS

4-1. ADJUSTMENTS WITH COMMANDER

Service adjustments are made with the RM-954 that comes with this unit.

a. ENTERING SERVICE MODE

With the unit on standby
↓
[DISPLAY]
↓
[5]
↓
[VOL (+)]
↓
[POWER]

This operation sequence puts the unit into service mode.

b. METHOD OF CANCELLATION FROM SERVICE MODE

Set the standby condition (Press [POWER] button on the commander), then press [POWER] button again, hereupon it becomes TV mode.

c. METHOD OF WRITE INTO MEMORY

1) Set to Service Mode.
2) Press [1] (UP) and [4] (DOWN), select an item of adjustment.
3) Press [MUTING] button and it will indicate WRITE on the screen.
4) Press [0] button to write into memory.

d. MEMORY WRITE CONFIRMATION METHOD

1) After adjustment, pull out the plug from AC outlet, and then plug into AC outlet again.
2) Turn the power switch ON and set to Service Mode.
3) Call the adjusted items again to confirm adjustments were made.

The screen display is :

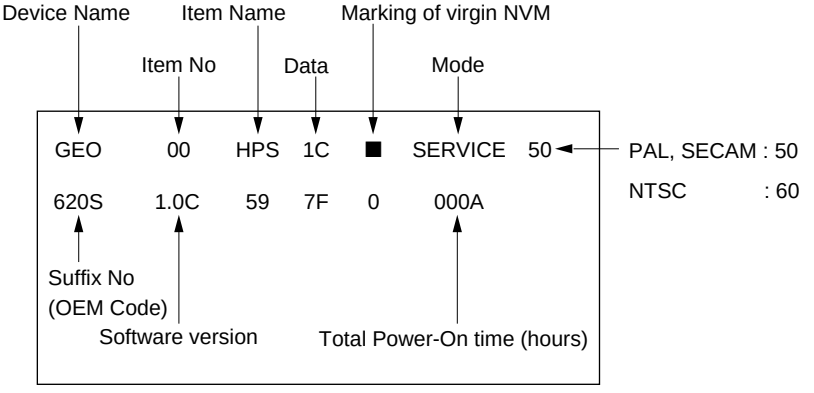

[1], [4] ↓	Select the adjustment item.
[3], [6] ↓	Raise/lower the data value.
[MUTING] ↓	Writes.
[0]	Executes the writing.

[7], [0]	All the data becomes the values in memory.
[8], [0]	All user control goes to the standard state.
[5], [0]	Service data initialization (Be sure not to use usually.)
[2], [0]	Write 50Hz adjustment data to 60Hz, or vice versa.

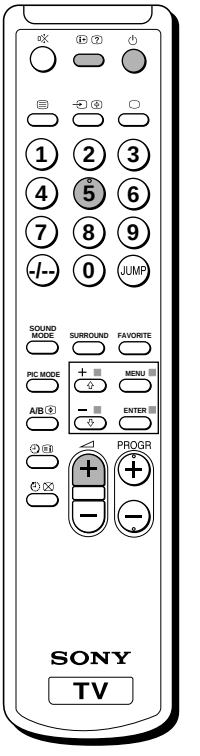

RM-954

4-2. ADJUSTMENT METHOD

Item Number 00 of device GEO

This explanation uses H-Position as an example.

1. Select “GEO 00 HPS” with the [1] and [4] buttons.
2. Raise/lower the data with the [3] and [6] buttons.
3. Select the optimum state. (The standard is 1F for PAL reception.)
4. Write with the [MUTING] button. (The display changes to WRITE.)
5. Execute the writing with the [0] button. (The WRITE display will be changed to red color while excuting, and back to SERVICE.)

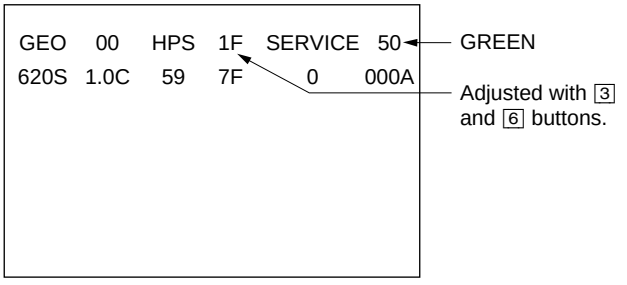

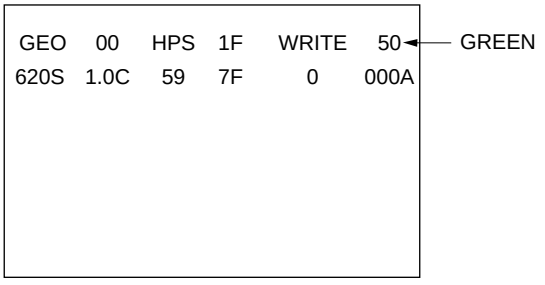

Written with [MUTING]

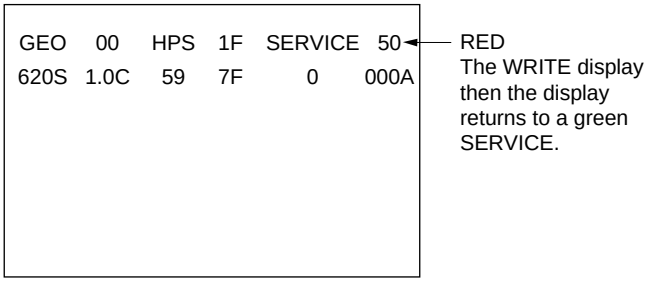

Write executed with [0]

Use the same method for all Items. Use [1] and [4] to select the adjustment item, use [3] and [6] to adjust, write with [MUTING], then execute the write with [0].

Note : 1. In [WRITE], the data for all items are written into memory together.
2. For adjustment items that have different standard data between 50Hz or 60Hz, be sure to use the respective input signal after adjustment.

Adjustment Item Table

Device Name	Functionality No	Functionality Name	Note	Data Range	Function	Note for Different Data	Register No. (bit)	Slava Address	RAM Address (bit)
GEO	0	HPS	7	3F	H Position	50/60HZ	12 (7-2)	CXA2130S(88H)	96 (7-2)
	1	HSZ	1F	3F	H Size	50/60HZ	11 (7-2)		95 (7-2)
	2	PAP	1F	3F	Pin Amp	50/60HZ	13 (7-2)		97 (7-2)
	3	TLT	7	0F	Trapezium	50/60HZ	15 (7-4)		99 (7-4)
	4	VPS	1F	3F	V Position	50/60HZ	0F (7-2)		93 (7-2)
	5	VSZ	1F	3F	V Size	50/60HZ	0E (7-2)		92 (7-2)
	6	SCO	7	0F	S Correction	50/60HZ	10 (7-4)		94 (7-4)
	7	VLN	7	0F	V Linearity	50/60HZ	10 (3-0)		94 (3-0)
	8	BOW	7	0F	AFC Bow	50/60HZ	16 (7-4)		9A (7-4)
	9	AGL	7	0F	AFC-Angle	50/60HZ	16 (3-0)		9A (3-0)
	0A	UPN	1F	3F	Upper Pin	50/60HZ	14 (7-2)		98 (7-2)
	0B	LPN	2F	3F	Lower Pin	50/60HZ	18 (7-2)		9C (7-2)
	0C	HBL	1	1	H Blanking on/off		18 (1)		6C (1)
	0D	LBL	7	0F	Left H Blanking	50/60HZ	17 (7-4)		9B (7-4)
	0E	RBL	7	0F	Right H Blanking	50/60HZ	17 (3-0)		9B (3-0)
WHB	0	RDR	1F	3F	R Drive	DYNAMIC/others	09 (7-2)	CXA2130S(88H)	A3 (7-2)
	1	GDR	1F	3F	G Drive	DYNAMIC/others	0A (7-2)		A4 (7-2)
	2	BDR	1F	3F	B Drive	DYNAMIC/others	0B (7-2)		A5 (7-2)
	3	RCT	7	0F	R Cutoff	SECAM/others	07 (3-0)		A7 (3-0)
	4	GCT	7	0F	G Cutoff	SECAM/others	08 (7-4)		A8 (7-4)
	5	BCT	7	0F	B Cutoff	SECAM/others	08 (3-0)		A8 (3-0)
	6	BMN	15	1F	Brightness Minimum Data		06 (7-2)		106
	7	SBR	1F	3F	Sub Brightness Control		06 (7-2)		107
SAJ	0	PMX	33	3F	Picture Maximum Data		03 (7-2)	CXA2130S(88H)	105
	1	SHU	8	0F	Sub Hue Control	TV/Video	05 (7-2)		108
	2	SSH	8	0F	Sub Sharpness Control	TV/Video	07 (7-4)		109
	3	SCL	1F	3F	Sub Color Control	NTSC/others	04 (7-2)		10A
VP	0	EHT	5	0F	EHT Comp	50/60HZ	15 (3-0)	CXA2130S(88H)	99 (3-0)
	1	GMA	2	03	Gamma Correction (sepatated in STD mode)	NTSC/others	0B (1-0)		25B (1-0)
	2	YDL	6	0F	Y Delay	PAL/SECAM/NTSC	0C (3-0)		A0 (3-0)
	3	SST	1	03	SECAM ID Start Position		1B (1-0)		6F (1-0)
	4	SSP	1	03	SECAM ID Stop Position		1B (3-2)		6F (3-2)
	5	SLV	2	03	SECAM ID Level		1C (1-0)		70 (1-0)
	6	SBF	22	3F	SECAM BELL fO		1C (7-2)		70 (7-2)
	7	DYC	1	1	Dynamic Color on/off		0A (1)		5E (1)
	8	ABL	1	1	ABL Mode Switching (except STANDARD mode)		09 (1)		5D (1)
	9	VTH	1	1	ABL Detection Vth Switching		09 (0)		5D (0)
	0A	SFO	1	1	FO Switching for Sharpness	NTSC/others	05 (1)		24A (1)
	0B	DCX	1	1	DC Trans. Ratio Switching		06 (1)		5A (1)
	0C	SHT	1	1	Pre-/Overshoot ratio Switch	NTSC/others	06 (0)		24A (0)

Adjustment Item Table

Device Name	Functionality No	Functionality Name	Note	Data Range	Function	Note for Different Data	Register No. (bit)	Slava Address	RAM Address (bit)
VP	0D	HDW	0	1	H Drive Pulse Width Switch		00 (6)		54 (6)
	0E	AFC	1	03	AFC Gain Control	TV/Video/Text	0F (1-0)		A1 (1-0)
	0F	HOS	7	0F	H Oscillation		0C (7-4)		60 (7-4)
	10	HSS	0	1	Slice Level of H Sync Sep.		0D (1)		61 (1)
	11	VSS	0	1	Slice Level of V Sync Sep.		0D (0)		61 (0)
	12	HMS	1	1	Macro Vision C/m off/on	50/60Hz	0E (0)		92 (0)
	13	YUV	0	1	YUV Switch Control		01 (0)		55 (0)
	14	CDV	1	3	CD mode for Video	Video only	0D (5-4)		259 (5-4)
	15	RON	1	1	R ON	not memorized	01 (3)		55 (3)
	16	GON	1	1	G ON	not memorized	01 (2)		55 (2)
	17	BON	1	1	B ON	not memorized	01 (1)		55 (1)
	18	PON	1	1	P ON	not memorized	00 (7)		54 (7)
	19	BLK	0	1	BLK Off		12 (0)		66 (0)
	1A	VMC	0	1	VM Off		13 (0)		67 (0)
AP	0	BCS	1	3	Bass Center Shift		#4 (3-0)	TDA7315(80H)	24C (1-0)
	1	TCS	1	3	Treble Center Shift		#5 (3-0)		24D (1-0)
	2	TRF	2	3	RF Treble Offset		#5 (3-0)		24E (1-0)
MSP	0	WST	15	FF	W/G Stereo Threshold			MSP3415D(84H)	165
	1	WBT	EC	FF	W/G Bilingual Threshold				166
	2	WLL	5	FF	W/G Monaural Threshold				167
	3	WAC	1	0F	W/G Agreement Count				168
	4	WDL	30	FF	W/G Search Delay				169
	5	NDL	20	FF	NICAM Search Delay				16A
	6	SDL	10	FF	Stereo status Read Delay				16B
	7	AGC	1	1	AGC Switch Auto/Constant		00BB (7)		116 (7)
	8	REL	28	3F	AGC Gain at Constant Mode		00BB (6-1)		116 (6-1)
	9	CRM	0	1	Carrier muting on/off		00BB (9)		115 (9)
	0A	ACO	1	1	Audio Clock out on/off		0083 (5)		11A (5)
	0B	FP	1B	7F	FM Prescale for non-M system		000E (14-8)		221
	0C	FPM	32	7F	FM Prescale for M system		000E (14-8)		222
	0D	FH	36	7F	FM Prescale for HDEV		000E (14-8)		223
	0E	FHM	65	7F	FM Prescale for HDEV and M		000E (14-8)		224
	0F	WGP	2A	7F	W/G Prescale		000E (14-8)		225
	10	NIP	6D	7F	NICAM Prescale		0010 (14-8)		14F
	11	ERR	50	FF	Auto FM switch Threshold		0021 (10-3)		174
	12	VOL	6D	FF	Loud Speaker gain 7000h to 7ff0h	TEMPORARY	0000 (15-4)		254

Adjustment Item Table

Device Name	Functionality No	Functionality Name	Note	Data Range	Function	Note for Different Data	Register No. (bit)	Slava Address	RAM Address (bit)
SVP	0	SBF	22	3F	SECAM BELL f0		1C (7-2)	CXA2060AS(8AH)	85 (7-2)
	1	HOS	7	0F	H Oscillation		0C (7-4)		80 (7-4)
	2	SHU	8	0F	Sub Hue Control	TV/Video	05 (7-2)		210
	3	SCL	1F	3F	Sub Color Control	NTSC/others	04 (7-2)		211
PIP	0	SDL	1	0F	Delay of output SELECT		01 (6-3)	SDA9288X(D6H)	1A0 (6-3)
	1	PPH	15	FF	H Position of TOP-LEFT Pin P		01/02		1AF
	2	PPV	2E	FF	V Position of TOP-LEFT Pin P		03 (7-0)		1B0
	3	YDL	0	07	Delay of Luminance Input		04 (2-0)		1A3 (2-0)
	4	HDI	0	0F	H Sync Delay for Inset		06 (3-0)		1A5 (3-0)
	5	ISC	0	1	Inset Clock Selection		06 (4)		1A5 (4)
	6	CLP	1	1	Clamp Pulse Selection		06 (5)		1A5 (5)
	7	CLC	0	1	Clamp Cycle Selection		06 (6)		1A5 (6)
	8	CON	1	0F	Contrast Adjustment for inset		09 (7-4)		1A8 (7-4)
	9	PLL	2	03	H Position For A-ch		0D (6-5)		1AC (6-5)
	0A	PDV	0	0F	PIP V Pedestal Level		0E (7-4)		1AD (7-4)
	0B	PDU	0	0F	PIP U Pedestal Level		0E (3-0)		1AD (3-0)
TXT	0	TXH	1	3	Teletext Horizontal Position		10 (1-0)	SAA5261(58H)	248 (1-0)
	1	TXV	0	3	Teletext Vertical Position		10 (5-4)		248 (5-4)
OPM	0	OSH	0A	3F	OSD H Position	Option-Misc	1F1	CXP86461(60H)	18D (7-2)
	1	COM	1	03	Comb Selection				23F (7-6)
	2	APC	1	1	APC Switch				23E (5)
	3	TSY	0	03	TV Sys at Auto TV Sys				23E (4-3)
	4	MUT	0	1	No Signal Mute				23E (0)
	5	AFM	1	1	Auto FM switch				23E (1)
	6	RFB	0	3	C-BPF Control				23F (5-4)
	7	TVO	0	7	Tilt to V-Angle offset				23F (2-0)
	8	DBL	0	1	Disable Blueback Function				23E(2)
OPB	0	OP1	FF	FF	Optional Bits 1 (see below)	Option-Bits		CXP86461(60H)	48
	1	OP2	E3	FF	Optional Bits 2 (see below)				49
	2	OP3	0	FF	Optional Bits 3 (see below)				4A

NOTE

- shaded items are fixed data.
- Standard data listed on the Adjustment Item Table are reference values, therefore it may be different for each model and for each mode.
- Note for Different Data Those are the standard data values written on the microprocessor. Therefore, the data values of the modes and stored respectively in the memory.
  In case of a device replacement, adjustment by rewriting the data value is necessary for some items.

ITEM INFORMATION.
No. OPB0 OP1

Item	XTAL 4.43	XTAL 3.58	SECAM	2nd. Lang	B/G	I	D/K	M
KV-XF25M50	1	1	1	1	1	1	1	1

No. OPB1 OP2

Item	TOP	NICAM	HDEV	Thai Bil	–	DVD input	AV Input	
KV-XF25M50	0	0	0	0	0	0	1	1

No. OPB2 OP3

Item	–	2199 Curve	Auto PIC	Auto TV sys	US ST	AV Mono	11 KEY	Color SW
KV-XF25M50	0	0	1	0	0	0	0	0

4-3. PICTURE QUALITY ADJUSTMENTS

SUB COLOR ADJUSTMENT

1. Input a PAL color-bar.
2. Set to the following condition:
   PICTURE 100%, BRIGHTNESS 50%, COLOR 50%
3. Connect an oscilloscope to pin ① (B OUT) of CN305, A board.
4. Set to Service Mode and select SAJ 3 'SCL' with [1] and [4] of the commander then adjust to VB2=VB3=VB4 with [3] and [6].
5. Press [MUTING] → [0] of the commander to write the data.
6. Adjust SAJ 3 'SCL' as step 2 to 5 when receiving NTSC color-bar.

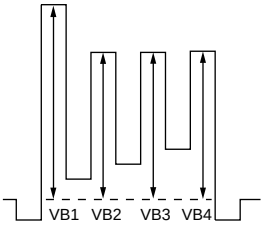

VB2 = VB3 = VB4

SUB HUE ADJUSTMENT

1. Select Video 1.
2. Input a NTSC color-bar, video into Video 1.
3. Set the following condition:
   PICTURE 100%, BRIGHTNESS 50%, COLOR 50%
4. Connect an oscilloscope to pin ① (B OUT) of CN305, A board.
5. Select SAJ 1 'SHU' with [1] and [4] of the commander by setting to Service Mode and adjust to VB1=VB2=VB3=VB4 with [3] and [6].

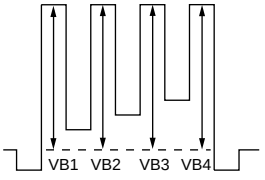

VB1 = VB2 = VB3 = VB4

6. Press [MUTING] → [0] of the commander to write the data.

BELL FILTER ADJUSTMENT

1. Input SECAM color-bar signal.
2. Connect the dual-trace oscilloscope to the pin ⑨ (R-Y) of CN303 (not mounted).
3. Adjust SERVICE MODE, ITEMS 'SBF' as shown below.

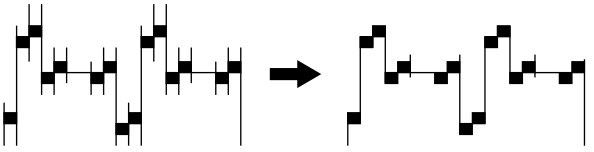

4-4. A BOARD ADJUSTMENT AFTER IC003 (MEMORY) REPLACEMENT

When replacing IC003 (MEMORY), be sure to change IC001 (μ-COM) to the following new IC at the same time.
IC001(μ-CON): CXP86461-620S

1. Enter to Service Mode.

2. Press commander buttons [5] and [0] (Data Initialize), and [2] and [0] (Data Copy) to initialize the data.

3. Call each item number and check if the respective screen shows the normal picture.
   In cases where items are not well adjusted, rectify the items with fine adjustment.
   Write the data per each item number ([MUTING] +[0]).

4. Select item numbers "OPB0" (OP1), "OPB1" (OP2) and "OPB2" (OP3) and respectively set the bit per model with command buttons [3] and [6].

5. Press commander buttons [8] and [0] (Test Normal) to return to the data that was set on the shipment from the factory.
   (This will also cancel Service Mode.)

4-5. PICTURE DISTORTION ADJUSTMENT (1)

Item Number 00 – 0B

GEO 0 HSH (H POSITION)

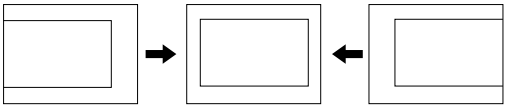

GEO 1 HSZ (H SIZE)

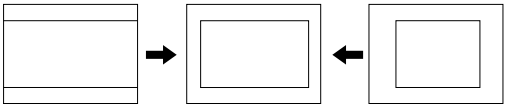

GEO 2 PAP (PIN AMP)

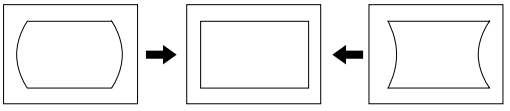

GEO 3 TILT (TRAPEZIUM)

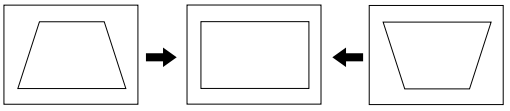

GEO 4 VSH (V POSITION)

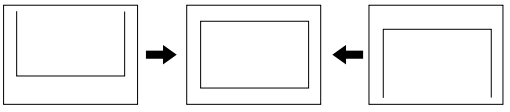

GEO 5 VSZ (V SIZE)

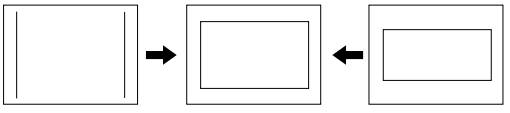

GEO 6 SCR (VERTICAL S-Correction)

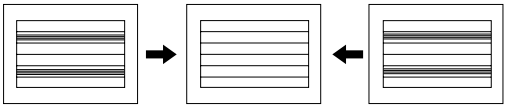

GEO 7 VLN (V LINEARITY)

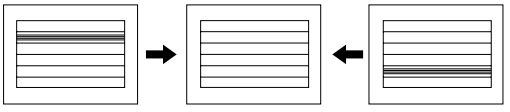

GEO 8 VBOW (AFC.BOW)

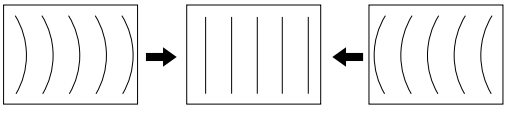

GEO 9 AGL (AFC.ANGLE)

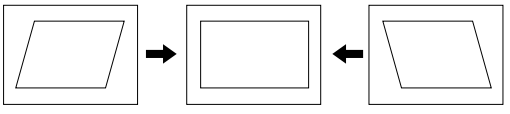

GEO 0A UCP (UPPER CORNER PIN)
GEO 0B LCP (LOWER CORNER PIN)

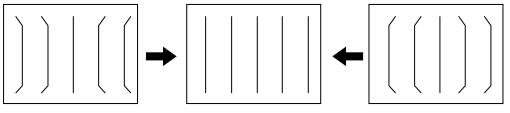

PICTURE DISTORTION ADJUSTMENT (2)

H-TRAPEZOID (Rotate RV1801)

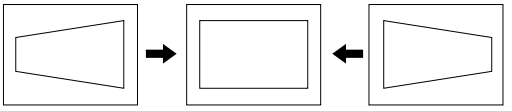

SECTION 5
DIAGRAM

5-1. BLOCK DIAGRAM

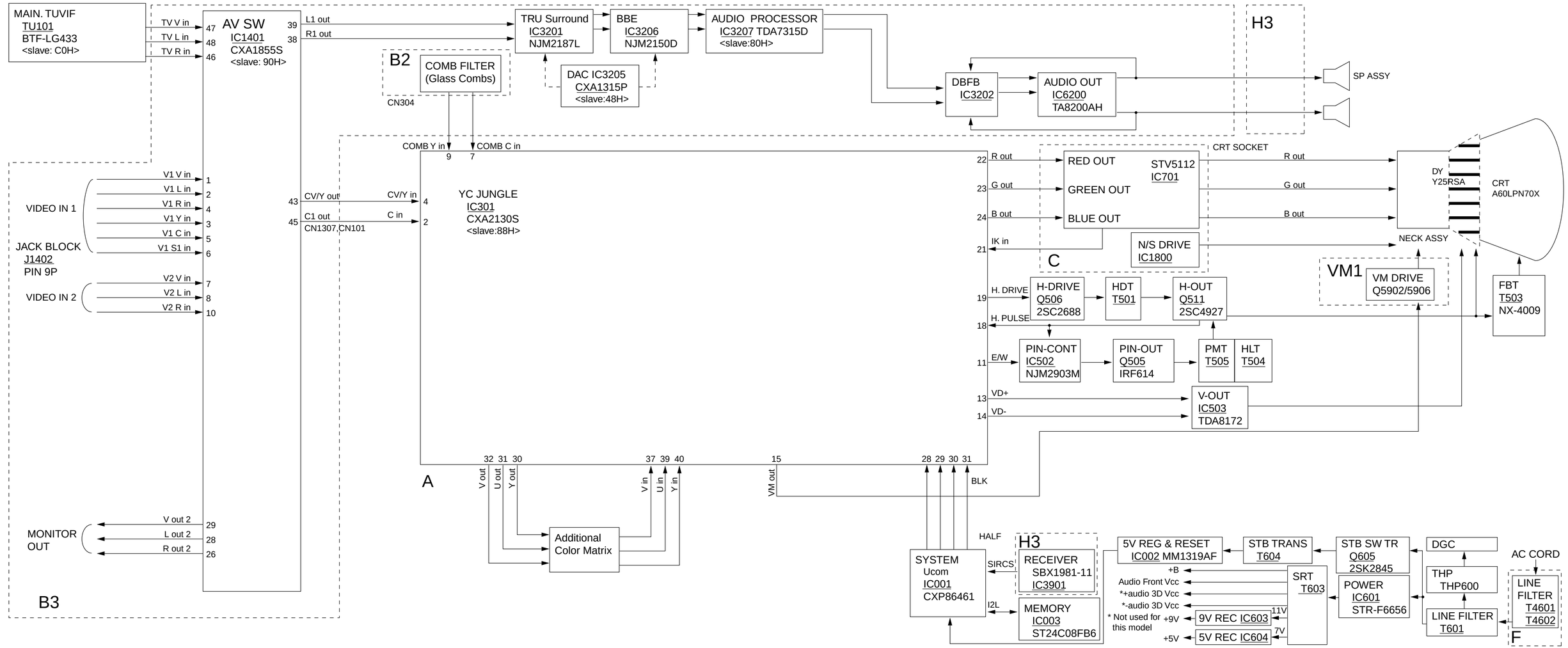

KV-XF25M50
RM-954

KV-XF25M50
RM-954

5-2. FRAME SCHEMATIC DIAGRAM

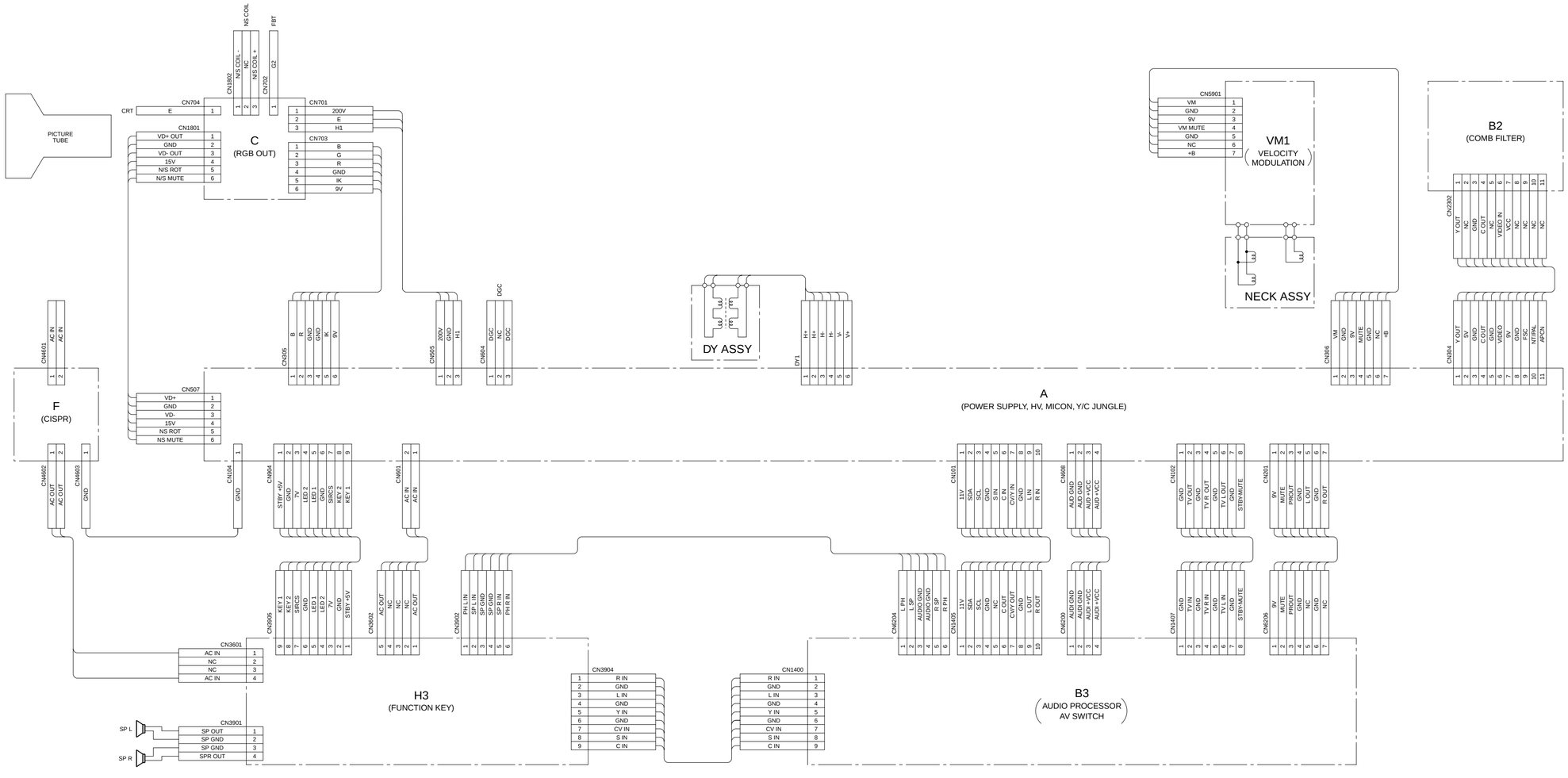

5-3. CIRCUIT BOARDS LOCATION

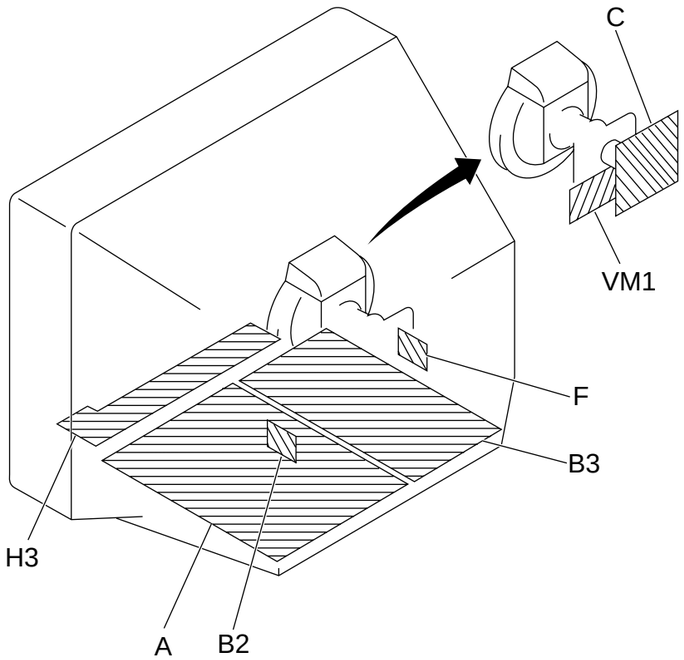

5-4. SCHEMATIC DIAGRAMS AND PRINTED WIRING BOARDS

Note:

- All capacitors are in µF unless otherwise noted.
- All electrolytic capacitors are rated at 50V unless otherwise noted.
- All resistors are in ohms.
  kΩ = 1000Ω, MΩ = 1000kΩ
- Indication of resistance which does not have rating electrical power is as follows.

Pitch: 5 mm Rating electrical power 1/4W (CHIP: 1/10W)

- : nonflammable resistor.
- : internal component.
- : panel designation or adjustment for repair.
- All variable and adjustable resistors have characteristic curve B unless otherwise noted.
- **Readings are taken with a color-bar signal input.**
  no mark : PAL
  ( ) : SECAM
  [ ] : NTSC 3.58
  « » : NTSC 4.43
- **Readings are taken with a 10 MΩ digital multimeter.**
- **Voltage are dc with respect to ground unless otherwise noted.**
- **Voltage variations may be noted due to normal production tolerances.**
- **All voltages are in V.**
- *** : Cannot be measured.**
- **Circled numbers are waveform references.**
- **: B + bus.**
- **: B – bus.**
- **⇨ : signal path.**

Reference information

RESISTOR	: RN	METAL FILM
	: RC	SOLID
	: FPRD	NONFLAMMABLE CARBON
	: FUSE	NONFLAMMABLE FUSIBLE
	: RS	NONFLAMMABLE METAL OXIDE
	: RB	NONFLAMMABLE CEMENT
	: RW	NONFLAMMABLE WIREWOUND
	: ※	ADJUSTMENT RESISTOR
COIL	: LF-8L	MICRO INDUCTOR
CAPACITOR	: TA	TANTALUM
	: PS	STYROL
	: PP	POLYPROPYLENE
	: PT	MYLAR
	: MPS	METALIZED POLYESTER
	: MPP	METALIZED POLYPROPYLENE
	: ALB	BIPOLAR
	: ALT	HIGH TEMPERATURE
	: ALR	HIGH RIPPLE

Note: The component identified by shading and mark ⚠ are critical for safety. Replace only with part number specified.

KV-XF25M50 RM-954

A BOARD

IC

IC001	B-10
IC002	C-9
IC003	A-9
IC100	B-5
IC201	B-11
IC203	C-3
IC204	B-2
IC301	B-6
IC502	E-6
IC503	J-5
IC601	I-8
IC602	H-6
IC603	D-8
IC604	D-10
IC901	I-13
PH600	H-7

TRANSISTOR

Q001	B-8
Q002	B-8
Q003	C-9
Q004	C-9
Q101	A-4
Q201	A-11
Q202	A-11
Q203	C-11
Q204	C-11
Q205	A-12
Q206	A-11
Q207	A-11
Q301	B-8
Q302	A-6
Q303	A-6
Q304	B-6
Q305	B-5
Q306	B-5
Q307	C-7
Q308	C-7
Q309	C-7
Q310	D-7
Q311	D-9
Q312	B-7
Q313	B-8
Q315	B-5
Q401	D-2
Q402	D-1
Q403	D-2
Q404	C-3
Q501	D-6
Q502	E-7
Q503	F-6
Q505	D-6
Q506	D-2
Q507	H-6
Q509	F-6
Q511	F-1
Q600	C-12
Q601	F-11
Q602	J-7
Q603	I-7
Q604	H-6
Q605	E-12
Q606	F-11
Q607	H-13
Q901	H-13
Q902	H-13

DIODE

D001	B-8
D002	C-8
D003	C-9
D004	D-8
D005	B-8
D006	A-3
D203	C-11
D300	A-9
D301	B-9
D302	B-6
D303	B-5
D304	B-5
D305	B-5
D306	C-5
D307	C-5
D308	B-5
D309	B-6
D310	A-6
D311	C-6
D312	C-6
D313	A-8
D315	B-7
D316	C-7
D317	B-9
D314	A-9
D319	C-6
D320	C-6
D321	B-6
D401	D-2
D402	C-3
D403	B-1
D404	C-2
D405	C-1
D406	B-1
D407	C-2
D408	C-1
D409	A-1
D504	D-5
D505	H-6
D506	F-6
D507	F-6
D508	I-5
D509	E-6
D510	F-5
D511	F-5
D512	G-5
D513	I-5
D517	F-2
D518	F-2
D519	F-2
D520	E-5
D521	I-4
D522	J-4
D525	F-5
D526	F-6
D527	F-3
D528	F-3
D529	F-5
D530	F-2
D531	E-6
D532	E-6
D533	D-2
D534	E-6
D600	G-13
D601	I-8
D602	G-13
D603	F-11
D604	J-7
D605	G-10
D606	E-11
D607	F-10
D608	E-11
D609	H-8
D610	J-8
D611	I-7
D612	F-8
D613	I-7
D614	H-7
D615	E-7
D616	E-9
D617	F-8
D618	F-9
D620	D-8
D621	F-8
D622	F-7
D623	F-12
D624	F-12
D625	D-12
D627	F-8
D628	G-5
D629	F-9
D630	E-9
D631	G-12
D632	F-12
D633	E-12
D634	F-11
D635	F-12
D636	D-12
D637	F-11
D638	E-11
D901	C-13
D902	D-13
D903	C-13
D904	D-13
D905	F-13
D906	I-13

A [POWER SUPPLY, HV, MICON, Y/C JUNGLE]

PRINTED WIRING BOARD

– A Board –

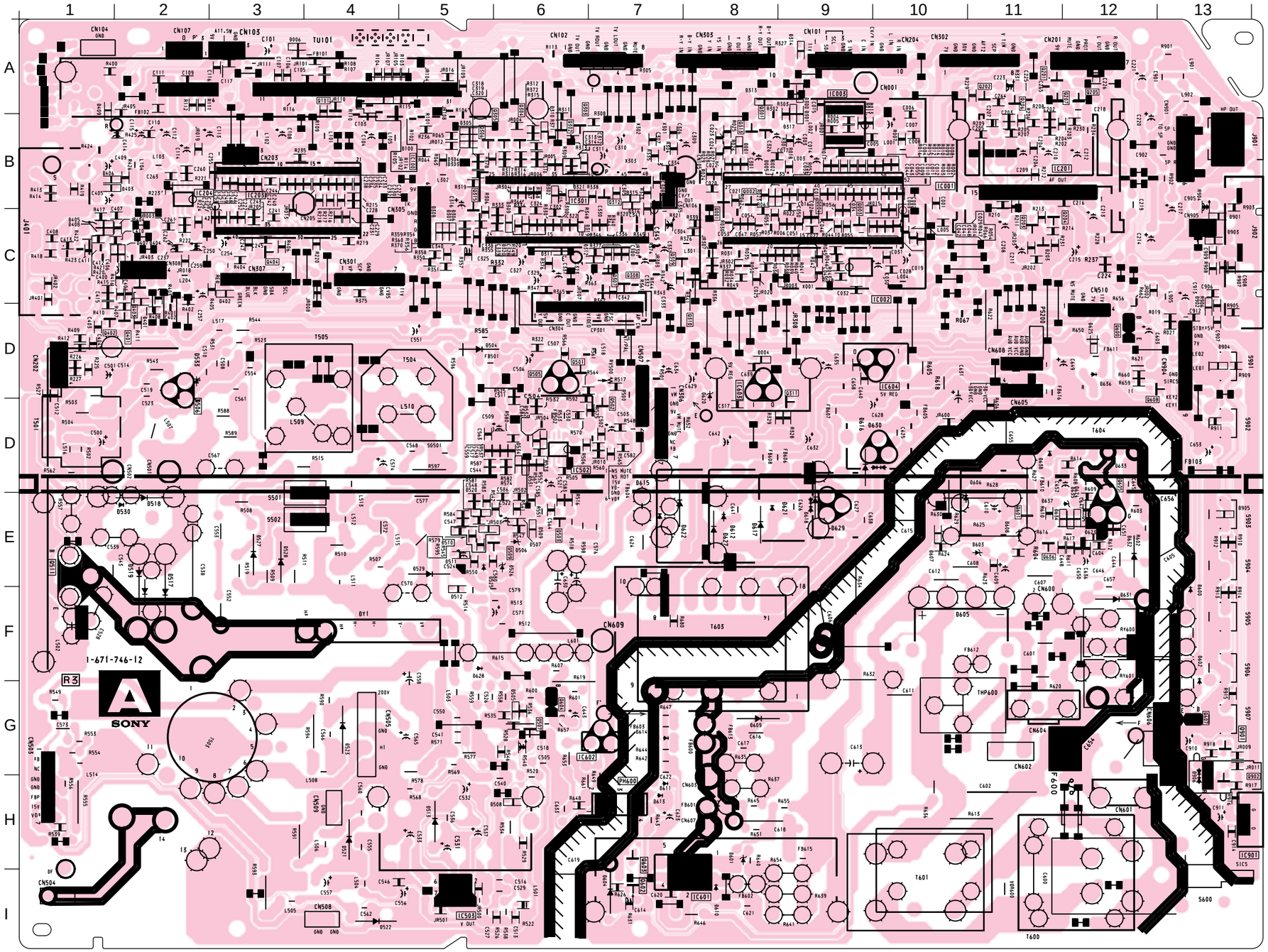

KV-XF25M50
RM-954
KV-XF25M50
RM-954

B3 [AUDIO PROCESSOR, SUB TUNER, AV SWITCH]

PRINTED WIRING BOARD

– B3 Board –

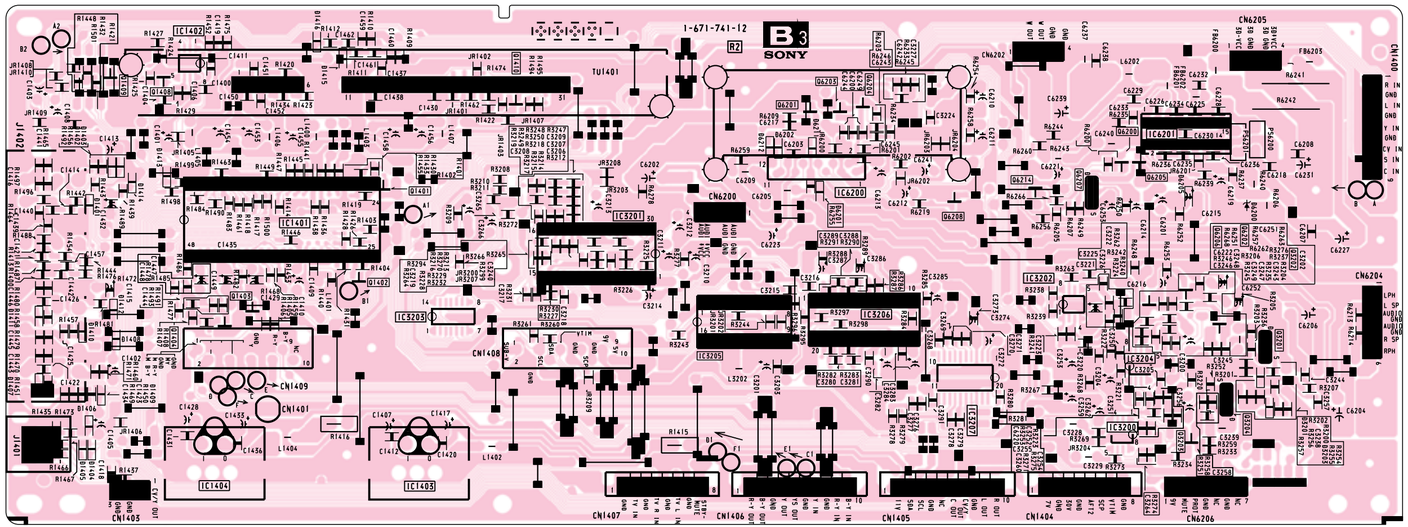

B3 BOARD IC3201 NJM2187L

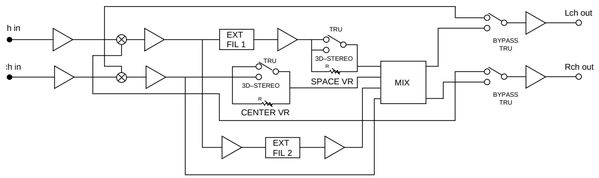

KV-XF25M50
RM-954

KV-XF25M50
RM-954

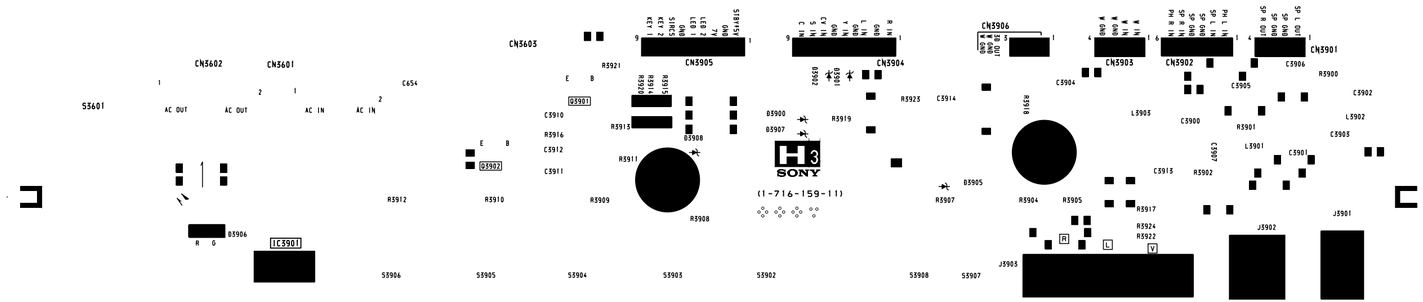

Sony Corporation
SONY TV Industries (M) Sdn. Bhd.
TV Business of General Area

9-965-752-01

English
99GM70029-1
Printed in Malaysia
© 1999. 7