Chapter 25

Coupling the Transmitter to the Line

How many times have you heard someone on the air saying how he just spent hours and hours pruning his antenna to achieve a 1:1 SWR? Indeed, have you ever wondered whether all that effort was worthwhile? Now don't get the wrong impression: a 1:1 SWR is *not* a bad thing! Feed-line loss is minimized when the SWR is kept within reasonable bounds. The power for which a particular transmission line is rated is for a matched load.

Modern amateur transceivers use broadband, untuned solid-state final amplifiers, designed to operate into 50 Ω. Such a transmitter is able to deliver its rated output power—at its rated level of distortion—only when it is operated into the load for which it was designed. An SSB transmitter that is "splattering" is often being driven hard into the wrong load impedance.

Further, modern radios often employ protection circuitry to reduce output power automatically if the SWR rises to more than about 2:1. Protective circuits are needed because solid-state devices can almost instantly destroy themselves trying to deliver power into the wrong load impedance. Modern solid-state transceivers often include built-in antenna tuners (often at extra cost) to match impedances when the SWR isn't 1:1.

Older vacuum-tube amplifiers were a lot more forgiving than solid-state devices—they could survive momentary overloads without being instantly destroyed. The pi-networks used to tune and load old-fashioned vacuum-tube amplifiers were able to match a fairly wide range of impedances.

MATCHING THE LINE TO THE TRANSMITTER

As shown in Chapter 24, the impedance at the input of a transmission line is uniquely determined by a number of factors: the frequency, the characteristic impedance Z_0 of the line, the physical length, velocity factor and the matched-line loss of the line, plus the impedance of the load (the antenna) at the output end of the line. If the impedance at the input of the transmission line connected to the transmitter differs appreciably from the load resistance into which the transmitter output circuit is designed to operate, an impedance-matching network must be inserted between the transmitter and the line input terminals.

In older ARRL publications, such an impedance-matching network was often called a *Transmatch*. This is a coined word, referring to a "Transmitter Matching" network. Nowadays, radio amateurs commonly call such a device an *antenna tuner*.

The function of an antenna tuner is to transform the impedance at the input end of the transmission line—whatever it may be—to the 50 Ω needed to keep the transmitter loaded properly. An antenna tuner does *not* alter the SWR on the transmission line going to the antenna. It only ensures that the transmitter sees the 50-Ω load for which it was designed.

Column one of **Tables 1** and **2** lists the computed impedance at the center of two dipoles mounted over average ground (with a conductivity of 5 mS/m and a dielectric constant of 13). The dipole in Table 1 is 100 feet long, and is mounted as a "flat top," 50 feet high. The dipole in Table 2 is 66 feet long overall, mounted as an inverted-V, whose apex is 50 feet high and whose legs have an included angle of 120°. The second column in Tables 1 and 2 shows the computed impedance at the transmitter end of a 100-foot long transmission line using 450-Ω "window" open-wire line. Please recognize that there is nothing special or "magic" about these antennas—they are merely representative of typical antennas used by real-world amateurs.

Table 1

Impedance of Center-Fed 100' Flat-top Dipole, 50' High Over Average Ground

Frequency MHz	*Antenna Feed-Point Impedance, Ω*	*Impedance at Input of 100' 450-Ω Line, Ω*
1.83	4.5 – *j* 1673	5.0 – *j* 35
3.8	39 – *j* 362	311 – *j* 1365
7.1	481 + *j* 964	86 – *j* 138
10.1	2584 – *j* 3292	115 – *j* 654
14.1	85 – *j* 123	91 – *j* 96
18.1	2097 + *j* 1552	285 + *j* 743
21.1	345 – *j* 1073	69 + *j* 196
24.9	202 + *j* 367	1068 – *j* 729
28.4	2493 – *j* 1375	575 – *j* 1061

Table 2

Impedance of Center–Fed 66' Inv.–V Dipole, 50' at Apex, 120° Included Angle Over Average Ground

Frequency MHz	*Antenna Feed-Point Impedance, Ω*	*Impedance at Input of 100' 450-Ω Line, Ω*
1.83	1.6 – *j* 2257	4.4 – *j* 65
3.8	10 – *j* 879	645 + *j* 3855
7.1	65 – *j* 41	2769 + *j* 497
10.1	22 + *j* 648	1324 + *j* 4156
14.1	5287 – *j* 1310	2859 – *j* 2203
18.1	198 – *j* 820	2543 – *j* 1793
21.1	103 – *j* 181	621 + *j* 873
24.9	269 + *j* 570	474 – *j* 739
28.4	3089 + *j* 774	1041 – *j* 1314

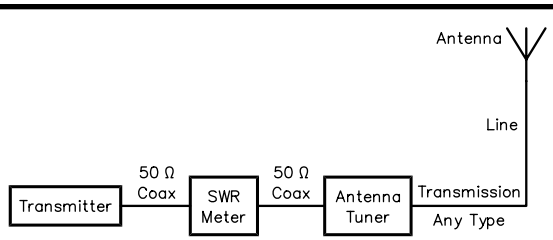

Fig 1—Essentials of a coupling system between transmitter and transmission line.

The impedance at the input of the transmission line varies over an extremely wide range when antennas like these are used over the entire range of amateur bands from 160 to 10 meters. The impedance at the input of the line (that is, at the antenna tuner's output terminals) *will be different* if the length of the line is changed. It should be obvious that an antenna tuner used with such a system must be very flexible to match the wide range of impedances it will encounter—and it must do so without arcing or blowing up!

The Matching System

Over the years, radio amateurs have devised a number of circuits for use as antenna tuners. At one time, when open-wire transmission line was more widely used, link-coupled tuned circuits were in vogue. With the increasing popularity of coaxial cable used as feed lines, other circuits have become more prevalent. The most common form of antenna tuner in recent years is some variation of a *T-network* configuration.

The basic system of a transmitter, matching circuit, transmission line and antenna is shown in **Fig 1**. As usual, we assume that the transmitter is designed to deliver its rated power into a load of 50 Ω. The problem is one of designing a matching circuit that will transform the actual line impedance at the input of the transmission line into a resistance of 50 Ω. This resistance will be unbalanced; that is, one side will be grounded, since modern transmitters universally ground one side of the output connector to the chassis. The line to the antenna, however, may be unbalanced (coaxial cable) or balanced (parallel-conductor line), depending on whether the antenna itself is unbalanced or balanced.

Harmonic Attenuation in an Antenna Tuner

This is a good place to bring up the topic of harmonic attenuation, as it is related to antenna tuners. One potentially desirable characteristic of

an antenna tuner is the degree of extra harmonic attenuation it can provide. While this is desirable in theory, it is not always achieved in practice. For example, if an antenna tuner is used with a single, fixed-length antenna on multiple bands, the impedances presented to the tuner at the fundamental frequency and at the harmonics will often be radically different. The amount of harmonic attenuation for a particular network will thus be dramatically variable also. See Table 1. For example, at 7.1 MHz, the impedance seen by the antenna tuner for the 100-foot flat top dipole is 481 + *j* 964 Ω. At 14.1 MHz, roughly the second harmonic, the impedance is 85 – *j* 123 Ω.

Trapped Antennas

There are some situations in Amateur Radio where the impedance at the second harmonic is essentially the same as that for the fundamental. This often involves "trapped" antenna systems or wideband log-periodic designs. For example, a system used by many amateurs is a "tribander" Yagi that works on 20, 15 and 10 meters. The second harmonic of a 20-meter transmitter feeding such a tribander can be objectionably strong for nearby amateurs operating on 10 meters. This is despite the approximately 60 dB of attenuation of the second harmonic provided by the low-pass filters built into modern solid-state transceivers. A linear amplifier can exacerbate the problem, since its second harmonic may be suppressed only about 46 dB by the typical pi-network output circuit used in most amplifiers.

Even in a trapped antenna system, most amateur antenna tuners will not attenuate the 10-meter harmonic much at all, especially if the tuner uses a high-pass T-network. This is the most common network used commercially because of the wide range of impedances it will match. Some T-network designs have attempted to improve the harmonic attenuation using parallel inductors and capacitors instead of a single inductor for the center part of the T. Unfortunately, this often leads to more loss and more critical tuning at the fundamental, while providing little, if any, additional harmonic suppression in actual installations.

Harmonics and Pi-Network Tuners

In a trapped antenna system, if a different network is used for an antenna tuner (such as a low-pass Pi network), there will be additional attenuation of harmonics, perhaps as much as 30 dB for a loaded Q of 3. The exact degree of harmonic attenuation, however, is often limited due to the stray inductance and capacity present in most tuners at harmonic frequencies. Further, the matching range for a Pi-network tuner is fairly limited because of the range of input and output capacitance needed for widely varying loads.

Harmonics and Stubs

Far more reliable suppression of harmonics can be achieved using shorted quarter-wave transmission-line stubs at the transmitter output. A typical 20-meter λ/4 shorted stub (which looks like an open circuit at 20 meters, but a short circuit at 10 meters) will provide about 25 dB of attenuation to the second harmonic. It will handle full legal amateur power too. See Chapter 26 for more details on stubs. In short, an antenna tuner that is capable of matching a wide range of impedances should not be relied on to give additional harmonic suppression.

MATCHING WITH INDUCTIVE COUPLING

Inductively coupled matching circuits are shown in basic form in **Fig 2**. R1 is the actual load resistance to which the power is to be delivered, and R2 is the resistance seen by the power source. The objective is to make it R2 = 50 Ω. L1 and C1 form a resonant circuit capable of being tuned to the operating frequency. The coupling between L1 and L2 is adjustable.

The circuit formed by C1, L1 and L2 is equivalent to a transformer having a primary-to-secondary impedance ratio adjustable over wide limits. The resistance coupled into L2 from L1 depends on the effective Q of the circuit L1-C1-R1, the reactance of L2 at the operating frequency, and the coefficient of coupling, k, between the two coils. The approximate relationship is (assuming C1 is properly tuned)

$$R2 = k^2 X_{L2} Q \qquad \text{(Eq 1)}$$

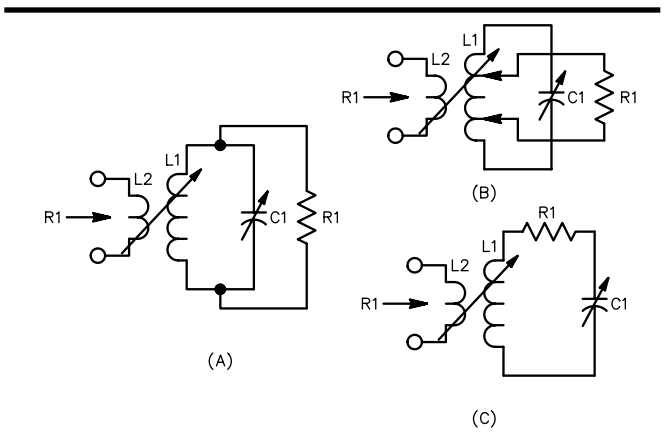

Fig 2—Circuit arrangements for inductively coupled impedance-matching circuit. A and B use a parallel-tuned coupling tank; B is equivalent to A when the taps are at the ends of L1. The series-tuned circuit at C is useful for very low values of load resistance, R1.

where X_{L2} is the reactance of L2 at the operating frequency. The value of L2 is optimum when X_{L2} = R2, in which case the desired value of R2 is obtained when

$$k = \frac{1}{\sqrt{Q}} \qquad \text{(Eq 2)}$$

This means that the desired value of R2 may be obtained by adjusting either the coupling, k, between the two coils, or by changing the Q of the circuit L1-C1-R1, or by doing both. If the coupling is fixed, as is often the case, Q must be adjusted to attain a match. Note that increasing the value of Q is equivalent to tightening the coupling, and vice versa.

If L2 does not have the optimum value, the match may still be obtained by adjusting k and Q, but one or the other—or both—must have a larger value than is needed when X_{L2} is equal to R2. In general, it is desirable to use as low a value of loaded Q as is practical. Low Q values mean that the circuit requires little or no readjustment when shifting frequency within a band (provided the antenna R1 does not vary appreciably with frequency). A low value of loaded Q also means that less loss occurs in the matching network itself.

Circuit Q

In Fig 2A, where a parallel-tuned network is used, Q_P is equal to

$$Q_P = \frac{R1}{X_{C1}} \qquad \text{(Eq 3)}$$

This assumes L1-C1 is tuned to the operating frequency. This circuit is suitable for comparatively high values of R1—from several hundred to several thousand ohms.

In Fig 2C, which is a series-tuned network, Q is equal to

$$Q_S = \frac{X_{C1}}{R1} \qquad \text{(Eq 4)}$$

Again, we assume that L1-C1 is tuned to the operating frequency. This circuit is suitable for low values of R1—from a few ohms up to a hundred or so ohms. In Fig 2B the Q depends on the placement of the taps on L1 as well as on the reactance of C1. This circuit is suitable for matching all values of R1 likely to be encountered in practice.

Note that to change Q in either A or C, Fig 2, it is necessary to change the reactance of C1. Since the circuit is tuned essentially to resonance at the operating frequency, this means that the L/C ratio must be varied in order to change Q. In Fig 2B a fixed L/C ratio may be used, since Q can be varied by changing the tap positions. The Q will increase as the taps are moved closer together, and will decrease as they are moved farther apart on L1.

Reactive Loads—Series and Parallel Coupling

More often than not, the load represented by the input impedance of the transmission line is reactive as well as resistive. In such a case the load cannot be represented by a simple resistance, such as R1 in Fig 2. As stated in Chapter 24, for any one frequency we have the option of considering the load to be a resistance in parallel with a reactance, or as a resistance in series with a reactance. In Fig 2, at A and B, it is convenient to use the parallel equivalent of the line input impedance. The series equivalent is more suitable for Fig 2C.

Thus, in **Fig 3A** and **3B** the load might be represented by R1 in parallel with the capacitive reactance C, and in Fig 3C by R1 in series with a capacitive reactance C. In Fig 3A, the capacitance C is in parallel with C1 and so the total capacitance is the sum of the two. This is the effective capacitance that, with L1, tunes to the operating frequency. Obviously the setting of C1 will be at a lower value of capacitance with such a load than it would with a purely resistive load such as in Fig 2A.

In Fig 3B the capacitance of C also increases the total capacitance effective in tuning the circuit. However, in this case the increase in effective tuning capacitance depends on the positions of the taps. If the taps are close together the effect of C on the tuning is relatively small, but it increases as the taps are moved farther apart.

In Fig 3C, the capacitance C is in series with C1 and so the total capacitance is less than either. Hence the capacitance of C1 must be increased in order to resonate the circuit, as compared with the purely resistive load shown in Fig 2C.

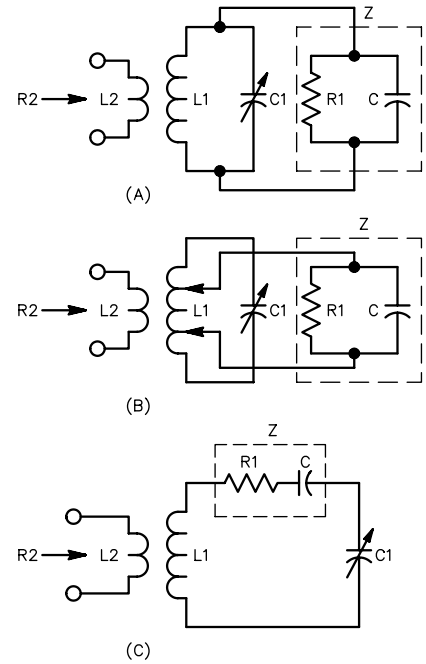

Fig 3—Line input impedances containing both resistance and reactance can be represented as shown enclosed in dotted lines, for capacitive reactance. If the reactance is inductive, a coil is substituted for the capacitance C.

If the reactive component of the load impedance is inductive, similar considerations apply. In such case an inductance would be substituted for the capacitance C shown in Fig 3. The effect in Fig 3A and 3B would be to decrease the effective inductance in the circuit, so C1 would require a larger value of capacitance in order to resonate the circuit at the operating frequency. In Fig 3C the effective inductance would be increased, thus making it necessary to set C1 at a lower value of capacitance for resonating the circuit.

Effect of Line Reactance on Circuit Q

The presence of reactance in the line input impedance presented to the matching network can affect the Q of the matching circuit. If the reactance is capacitive, the Q will not change if resonance can be maintained by adjustment of C1 without changing either the value of L1 or the position of the taps in Fig 3B (as compared with the Q when the load is purely resistive and has the same value of resistance, R1). If the load reactance is inductive the L/C ratio changes because the effective inductance in the circuit is changed and, in the ordinary case, L1 is not adjustable. This increases the Q in all three circuits of Fig 3.

When the load has appreciable reactance it is not always possible to adjust the circuit to resonance by readjusting C1, as compared with the setting it would have with a purely resistive load. Such a situation may occur when the load reactance is low compared with the resistance in the parallel-equivalent circuit, or when the reactance is high compared with the resistance in the series-equivalent circuit. The very considerable detuning of the circuit that results is often accompanied by an increase in Q, sometimes to values that lead to excessively high circulating currents in the circuit. This causes the efficiency to suffer. (Ordinarily the power loss in matching circuits of this type is inconsequential, if the loaded Q is below 10 and a good coil is used.) An unfavorable ratio of reactance to resistance in the input impedance of the line can exist if the SWR is high and the line length is near an odd multiple of $\lambda/8$ (45°).

Q of Line Input Impedance

The ratio between reactance and resistance in the equivalent input circuit—that is, the Q of the impedance at the line's input—is a function of line length and SWR. There is no specific value of this Q of which it can be said that lower values are satisfactory while higher values are not. In part, the maximum tolerable value depends on the tuning range available in the matching circuit. If the tuning range is restricted (as it will be if the variable capacitor has relatively low maximum capacitance), compensating for the line input reactance by absorbing it in the matching circuit—that is, by retuning C1 in Fig 3—may not be possible. Also, if the Q of the matching circuit is low, the effect of the line input reactance will be greater than it will when the matching-circuit Q is high.

As stated earlier, the optimum matching-circuit design is one in which the Q is low, that is, a low reactance-to-resistance ratio.

Compensating for Input Reactance

When the reactance/resistance ratio in the line input impedance is unfavorable, it is advisable to take special steps to compensate for it. This can be done as shown in **Fig 4**. Compensation consists of supplying external reactance of the same numerical value as the line reactance, but of the opposite kind. Thus in Fig 4A, where the line input impedance is represented by resistance and capacitance in parallel, an inductance L having the same numerical value of reactance as C can be connected across the line terminals to "cancel out" the line reactance. (This is actually the same thing as tuning the line to resonance at the operating frequency.) Since the parallel combination of L and C is equivalent to an extremely high resistance at resonance, the input impedance of the line becomes a pure resistance having essentially the same resistance as R1 alone.

The case of an inductive line impedance is shown in Fig 4B. In this case the external reactance required is capacitive, of the same numerical value as the reactance of L. Where the series equivalent of the line input impedance is used, the external reactance is connected in series, as shown at C and D in Fig 4.

In general, these methods are not needed unless the matching circuit has insufficient range of adjustment to provide compensation for the line reactance as described earlier, or when such a large readjustment is required that the matching-circuit Q becomes undesirably high. The latter condition usually is accompanied by heating of the coil used in the matching network.

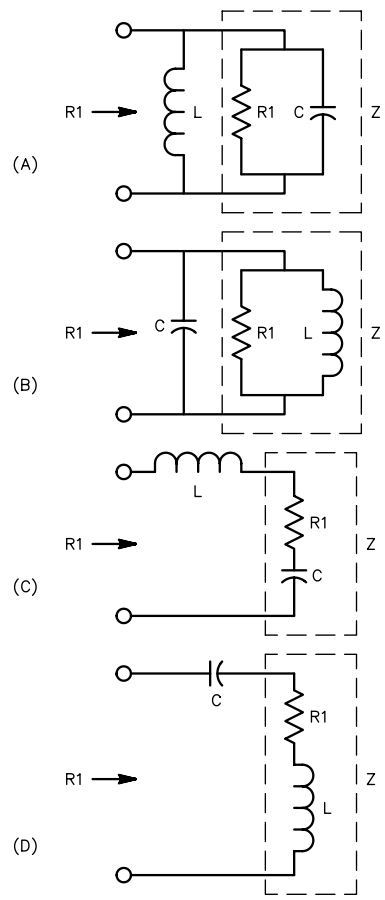

Fig 4—Compensating for reactance present in the line input impedance.

Methods for Variable Coupling

The coupling between L1 and L2, Figs 2 and 3, preferably should be adjustable. If the coupling is fixed, such as with a fixed-position link, the placement of the taps on L1 for proper matching becomes rather critical. The additional matching adjustment afforded by adjustable coupling between the coils facilitates the matching procedure considerably. L2 should be coupled to the center of L1 for the sake of maintaining balance, since the circuit is used with balanced lines.

If adjustable inductive coupling such as a *swinging link* is not feasible for mechanical rea-

sons, an alternative is to use a variable capacitor in series with L2. This is shown in **Fig 5**. Varying C2 changes the total reactance of the circuit formed by L2-C2, with much the same effect as varying the actual mutual inductance between L1 and L2. The capacitance of C2 should resonate with L2 at the lowest frequency in the band of operation. This calls for a fairly large value of capacitance at low frequencies (about 1000 pF at 3.5 MHz for 50-Ω line) if the reactance of L2 is equal to the line Z_0. To utilize a capacitor of more convenient size—maximum capacitance of perhaps 250-300 pF—a value of inductance may be used for L2 that will resonate at the lowest frequency with the maximum capacitance available.

On the higher frequency bands the problem of variable capacitors does not arise since a reactance of 50 to 75 Ω is within the range of conventional components.

Circuit Balance

Fig 5 shows C1 as a balanced or split-stator capacitor. This type of capacitor is desirable in a practical matching circuit to be used with a balanced line, since the two sections are symmetrical. The rotor assembly of the balanced capacitor may be grounded, if desired, or it may be left "floating" and the center of L1 may be grounded; or both may "float." Which method to use depends on considerations discussed later in connection with antenna currents on transmission lines. As an alternative to using a split-stator type of capacitor, a single-section capacitor may be used.

Measurement of Line Input Current

The RF ammeters shown in **Fig 6** are not essential to the adjustment procedure but they, or some other form of output indicator, are useful accessories. In most cases the circuit adjustments that lead to a match as shown by the SWR indicator will also result in the most efficient power transfer to the transmission line. However, it is possible that a good match will be accompanied by excessive loss in the matching circuit. This is unlikely to happen if the steps described for obtaining a low Q are taken. If the settings are highly critical or it is impossible to obtain a match, the use of additional reactance compensation as described earlier is indicated.

RF ammeters are useful for showing the comparative output obtained with various matching-network settings, and also for showing the improvement in output resulting from the use of reactance compensation when it seems to be required. Providing no basic circuit changes (such as grounding or ungrounding some part of the matching circuit) are made during such comparisons, the current shown by the ammeters will increase whenever the power put into the line is increased. Thus, the highest reading indicates the greatest transfer efficiency, assuming that the power input to the transmitter is kept constant.

Two ammeters, one in each line conductor, are shown in Fig 6. The use of two instruments gives a check on the line balance, since the currents should be the same. However, a single meter can be switched from one conductor to the other. If only one instrument is used, it is preferably left out of the circuit except when adjustments are

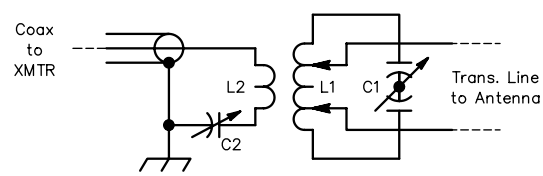

Fig 5—Using a variable capacitance, C2, as an alternative to variable mutual inductance between L1 and L2.

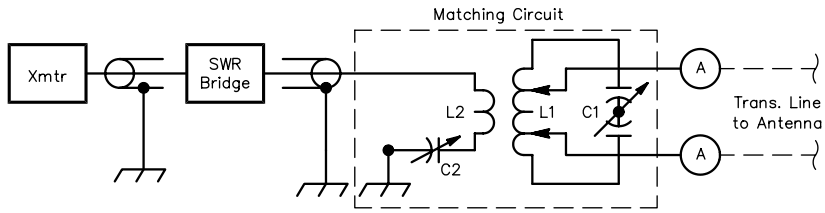

Fig 6—Adjustment setup using SWR indicator. A—RF ammeters (see text).

being made, since it will add capacitance to the side in which it is inserted and thus cause some unbalance. This is particularly important when the instrument is mounted on a metal panel.

Since the resistive component of the input impedance of a line operating with an appreciable SWR is seldom known accurately (and since the impedance varies with frequency), the RF current is of little value as a check on the exact power input to such a line. However, it shows in a relative way the efficiency of the system as a whole. The set of coupling adjustments that results in the largest line current with the least final-amplifier input power is the most desirable—and most efficient. Just remember that the amount of current into a multiband wire may vary dramatically from one frequency band to the next, since the impedance at the input of the line varies greatly. See Chapter 2.

For adjustment purposes, it is possible to substitute small flashlight lamps, shunted across a few inches of the line wires, for the RF ammeters. Their relative brightness shows when the current increases or decreases. They have the advantage of being inexpensive and of such small physical size that they do not unbalance the circuit. Another method to measure RF current is to use a toroidal core with a single-turn primary. See the section at the end of this chapter on "lowfer" antenna techniques.

THE L-NETWORK

A comparatively simple but very useful matching circuit for unbalanced loads is the L-network, as shown in **Fig 7A**. L-network antenna tuners are normally used for only a single band of operation, although multiband versions with switched or variable coil taps exist. To determine the range of circuit values for a matched condition, the input and load impedance values must be known or assumed. Otherwise a match may be found by trial.

In Fig 7A, L1 is shown as the series reactance, X_S, and C1 as the shunt or parallel reactance, X_P. However, a capacitor may be used for the series reactance and an inductor for the shunt reactance, to satisfy mechanical or other considerations.

The ratio of the series reactance to the series resistance, X_S/R_S, is defined as the network Q. The four variables, R_S, R_P, X_S and X_P, for lossless components are related as given in the equations below. When any two values are known, the other two may be calculated.

$$Q = \sqrt{\frac{R_P}{R_S} - 1} = \frac{X_S}{R_S} = \frac{R_P}{X_P} \qquad \text{(Eq 5)}$$

$$X_S = QR_S = \frac{QR_P}{1+Q^2} \qquad \text{(Eq 6)}$$

$$X_p = \frac{R_p}{Q} = \frac{R_p R_s}{X_s} = \frac{R_s^2 + X_s^2}{X_s} \qquad \text{(Eq 7)}$$

$$R_s = \frac{R_p}{Q^2+1} = \frac{X_s X_p}{R_p} \qquad \text{(Eq 8)}$$

$$R_P = R_S\left(1+Q^2\right) = Q\,X_P = \frac{R_S^2 + X_S^2}{R_S} \qquad \text{(Eq 9)}$$

The reactance of loads that are not purely resistive may be taken into account and absorbed or compensated for in the reactances of the matching network. Inductive and capacitive reactance values may be converted to inductor and

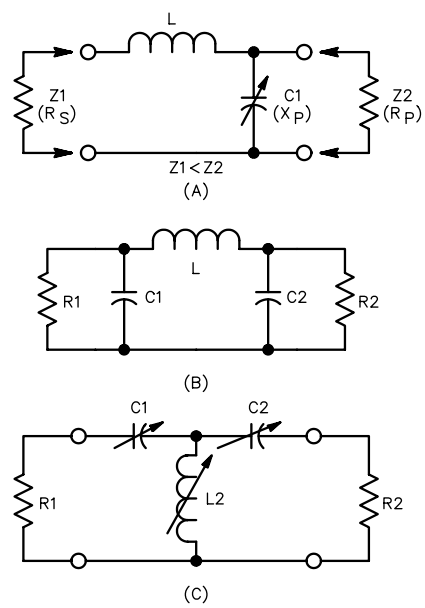

Fig 7—At A, the L-matching network, consisting of L1 and C2, to match Z1 and Z2. The lower of the two impedances to be matched, Z1, must always be connected to the series-arm side of the network and the higher impedance, Z2, to the shunt-arm side. The positions of the inductor and capacitor may be interchanged in the network. At B, the Pi-network tuner, matching R1 to R2. The Pi provides more flexibility than the L as an antenna-tuner circuit. See equations in the text for calculating component values. At C, the T-network tuner. This has more flexibility in that components with practical values can match a wide variety of loads. The drawback is that this network can be inefficient, particularly when the output capacitor is small.

capacitor values for the operating frequency with standard reactance equations.

It is important to recognize that Eq 5 through 9 are for *lossless* components. When real components with real unloaded Qs are used, the transformation changes and you must compensate for the losses. Real coils are represented by a perfect inductor in series with a loss resistance, and real capacitors by a perfect capacitor in parallel with a loss resistance. At HF, a physical coil will have an unloaded Q_U between 100 and 400, with an average value of about 200 for a high-quality airwound coil mounted in a spacious metal enclosure. A variable capacitor used in an antenna tuner will have an unloaded Q_U of about 1000 for a typical air-variable capacitor with wiper contacts. An expensive vacuum-variable capacitor can have an unloaded Q_U as high as 5000.

The power loss in coils is generally larger than in variable capacitors used in practical antenna tuners. The circulating RF current in both coils and capacitors can also cause severe heating. The ARRL Laboratory has had to extinguish fires inside antenna tuners pushed to their extreme limits during product testing! The RF voltages developed across the capacitors can be pretty spectacular at times, leading to severe arcing.

The ARRL program *TLA* ("Transmission Line, Advanced") on the diskette included with this book does calculations for transmission lines and antenna tuners. *TLA* evaluates four different networks: a low-pass L-network, a high-pass L-network, a Pi-network, and a T-network. Not only does it compute the exact values for network components, but also the full effects of voltage, current and power dissipation for each component. Depending on the load impedance presented to the antenna tuner, the internal losses in an antenna tuner can often be disastrous. See the documentation file TLA.TXT for further details on the use of *TLA*, which some call the "Swiss Army Knife" of transmission-line software.

THE PI-NETWORK

The impedances at the feed point of an antenna used on multiple HF bands varies over a very wide range, particularly if thin wire is used. This was described in detail in Chapter 2. The transmission line feeding the antenna transforms the wide range of impedances at the antenna's feed point to another wide range of impedances at the transmission line's input. This often mandates the use of a more flexible antenna tuner than an L-network.

The Pi-network, shown in **Fig 8B**, offers more flexibility than the L-network, since there are three variables instead of two. The only limitation on the circuit values that may be used is that the reactance of the series arm, the inductor L in the figure, must not be greater than the square root of the product of the two values of resistive impedance to be matched. The following equations are for lossless components in a Pi-network.

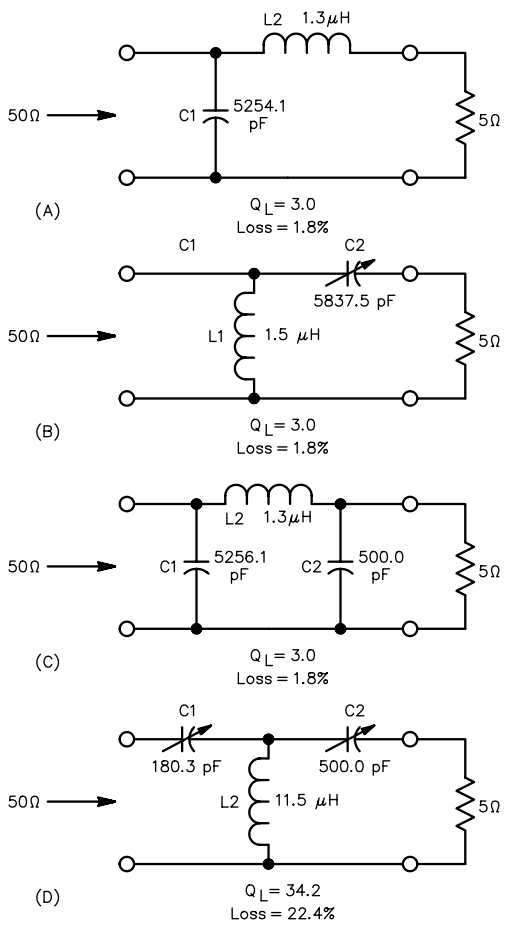

Fig 8—Computed values for real components (Q_U = 200 for coil, Q_U = 1000 for capacitor) to match 5-Ω load resistance to 50-Ω line. At A, low-pass L-network, with shunt input capacitor, series inductor. At B, high-pass L-network, with shunt input inductor, series capacitor. Note how large the capacity is for these L networks. At C, low-pass Pi-network and at D, high-pass T-network. The component values for the T- network are practical, although the loss is highest for this particular network, at 22.4% of the input power.

For R1 > R2

$$X_{C1} = \frac{R1}{Q} \qquad \text{(Eq 10)}$$

$$X_{C2} = R2\sqrt{\frac{R1/R2}{Q^2 + 1 - R1/R2}} \qquad \text{(Eq 11)}$$

$$X_L = \frac{Q \times R1 + \frac{R1 \times R2}{X_{C2}}}{Q^2 + 1} \qquad \text{(Eq 12)}$$

The Pi-network may be used to match a low impedance to a rather high one, such as 50 to several thousand ohms. Conversely, it may be used to match 50 Ω to a quite low value, such as 1 Ω or less. For antenna-tuner applications, C1 and C2 may be independently variable. L may be a roller inductor or a coil with switchable taps.

Alternatively, a lead fitted with a suitable clip may be used to short out turns of a fixed inductor. In this way, a match may be obtained through trial. It will be possible to match two values of impedances with several different settings of L, C1 and C2. This results because the Q of the network is being changed. If a match is maintained with other adjustments, the Q of the circuit rises with increased capacitance at C1.

Of course, the load usually has a reactive component along with resistance. The effect of these reactive components can be compensated for by changing one of the reactive elements in the matching network. For example, if some reactance was shunted across R2, the setting of C2 could be changed to compensate, whether that shunt reactance be inductive or capacitive.

As with the L network, the effects of real-world unloaded Q for each component must be taken into account in the Pi-network to evaluate real-world losses.

THE T-NETWORK

Both the Pi-network and the L-network often require unwieldy values of capacitance—that is, *large* capacitances are often required at the lower frequencies—to make the desired transformation to 50 Ω. Often, the range of capacitance from minimum to maximum must be quite wide when the impedance at the output of the network varies radically with frequency, as is common for multiband, single-wire antennas.

The T-network shown in Fig 7C is capable of matching a wide range of load impedances and uses practical values for the components. However, as in almost everything in radio, there is a price to be paid for this flexibility. The T-network can be very lossy compared to other network types. This is particularly true at the lower frequencies, whenever the load resistance is low. Loss can be severe if the maximum capacitance of the output capacitor C3 in Fig 7C is low.

For example, **Fig 8** shows the computed values for the components at 1.8 MHz for four types of networks into a load of 5 + *j* 0 Ω. In each case, the unloaded Q of the inductor used is assumed to be 200, and the unloaded Q of the capacitor(s) used is 1000. The component values were computed using the program *TLA*.

Fig 8A is a low-pass L-network; Fig 8B is a high-pass L-network and Fig 8C is a Pi-network. At more than 5200 pF, the capacitance values are pretty unwieldy for the first three networks. The loaded Q_L for all three is only 3.0, indicating that the network loss is small. In fact, the loss is only 1.8% for all three because the loaded Q_L is much smaller than the unloaded Q_U of the components used.

The T-network in Fig 8D uses more practical, realizable component values. Note that the output capacitor C3 has been set to 500 pF and that dictates the values for the other two components. The drawback is that the loaded Q in this configuration has risen to 34.2, with an attendant loss of 22.4% of the power delivered to the input of the network. For the legal limit of 1500 W, the loss in the network is 335 W. Of this, 280 W ends up in the inductor, which will probably melt! Even if the inductor doesn't burn up, the output capacitor C3 might well arc over, since it has more than 3800 V peak across it at 1500 W into the network.

Due to the losses in the components in a T-network, it is quite possible to "load it up into itself,"

causing real damage inside. For example, see **Fig 9**, where a T-network is loaded up into a short circuit at 1.8 MHz. The component values look quite reasonable, but unfortunately *all* the power is dissipated in the network itself. The current through the output capacitor C3 at 1500 W input to the antenna tuner would be 35 A, creating a peak voltage of more than 8700 V across C3. Either C1 (also at more than 8700 V peak) or C3 will probably arc over before the power loss is sufficient to destroy the coil. However, the loud arcing might frighten the operator pretty badly!

The point you should remember is that the T-network is indeed very flexible in terms of matching to a wide variety of loads. However, it must be used judiciously, lest it burn itself up. Even if it doesn't fry itself, it can waste that precious RF power you'd rather put into your antenna.

```
    TLA, Ver. 4.00AE, Copyright 1993-1997, ARRL -- by N6BV
Frequency =    1.830 MHz
Transmission line:  450-Ohm Window Ladder Line, Length:    0.00 ft
At Antenna Tuner output: 0.00 + j 0.00 Ω = 0.00 Ω at 0.00°
Highest network effective Q =  999.9
Est. power lost in tuner for    1500 W =    1500 W  (50.81 dB = %100.00% lost)
Xmsn-line loss:   0.00 dB; Total loss: 50.81 dB.  Into load:       0.0 W

At    1500 W         Cin           L         Cout
Unloaded Q          1000         200         1000
Reactance     -1119.115 Ω   150.577 Ω   -173.940 Ω
Peak Voltage       8669 V      8677 V      8677 V
RMS Current         5.5 A      40.7 A      35.3 A
Power Diss.          34 W      1250 W       216 W

                 77.7 pF          500.0 pF  ≈≈
                                                  0.00 Ω
   50.0 Ω                  13.1 µH                 |
                                              +j 0.00 Ω
                                        ≈≈

Z (Z), Cs [C], Freq.(F), Defaults (D), Network (N, 1-4), Main (M), Exit (X):
```

Fig 9—Screen print of TLA program for a T-network antenna tuner with short at output terminals. The tuner has been "loaded up into itself," dissipating all input power internally!

THE AAT (ANALYZE ANTENNA TUNER) PROGRAM

As you might expect, the limitations imposed by practical components used in actual antenna tuners depends on the individual component ratings, as well as on the range of impedances presented to the tuner for matching. ARRL has developed a program called *AAT*, standing for "Analyze Antenna Tuner," to map the range over which a particular design can achieve a match without exceeding certain operator-selected limits. *AAT* is included with the software on the diskette in the back of this book.

Let's assume that you want to evaluate a T-network on the ham bands between 1.8 to 29.7 MHz. First, you select suitable variable capacitors for C1 and C3. You decide to try the popular Johnson 154-16-1, which is rated for a minimum to maximum range from 32 to 241 pF, at 4500 V peak. Stray capacity in the circuit is estimated at 10 pF, making the actual range from 42 to 251 pF, with an unloaded Q of 1000. This is typical for an air-variable capacitor with wiping contacts. Next, you choose a variable inductor with a maximum inductance of 28 µH, and an unloaded Q of 200. You set a power-loss limit of 20%, equivalent to a power loss of about 1 dB. Then you let *AAT* do its computations.

AAT tests matching capability over a very wide range of load impedances, in octave steps of both resistance and reactance. For example, it starts out with 3.125 – *j* 3200 Ω, and checks whether a match is possible. It then proceeds to 3.125 –*j* 1600 Ω, 3.125 –*j* 800 Ω, etc, down to 3.125 + *j* 0 Ω. Then *AAT* checks matching with positive reactances: 3.125 + *j* 3.125, 3.125 + *j* 6.25, 3.125 + *j* 12.5, etc on up to 3.125 + *j* 3200 Ω. Then it repeats the same process, over the same range of negative and positive reactances, for a series resistance of 6.25 Ω. It continues this process in octave steps of resistance, all the way up to 3200 Ω resistive. A total of 253 impedances are thus checked for each frequency, giving a total of 2277 combinations for all nine amateur bands from 1.8 to 29.7 MHz.

If the program determines that the chosen network can match a particular impedance value, while staying within the limits of voltage, component values and power loss imposed by the operator, it stores the lost-power percentage in memory and proceeds to the next impedance. If *ATT* determines that a match is possible, but some parameter is violated (for example, the voltage limit is exceeded), it stores the out-of-specification problem to memory and tries the next impedance.

For the Pi-network and the T-network, which have three variable components, the program varies the output capacitor in discreet steps of capacitance. It is possible for *AAT* to miss very critical matching combinations because of the size of the steps necessary to hold execution time down. You can sometimes find such critical matching points manually using the *TLA* program, which uses the same algorithms to determine matching conditions. On a 100-MHz Pentium, *AAT* takes almost four minutes to evaluate all 2277 combinations for the default component values. On a 33-MHz '486DX machine it really seems to crawl. Because of

Loss percentage for Tee-network, series cap., shunt inductor, series cap.
Freq: 3.5 MHz, Z0: 50, 1500W, Vmax: 4500 V, Qu: 200 , Qc: 1000
Var. Cap: 42 to 251 pF with switched 160/80 m output cap.: 0 pF

Xa	3.125	6.25	12.5	25	50	100	200	400	800	1600	3200	Ra
- 3200	L+	L+	L+	L+		L+	L+	L+	L+	V	7.2	
- 1600	L+	L+	L+	L+		L+	V	V	6.7	5.4	5.6	
- 800	L+	L+	C-	C-	V	V	8.1	5.5	4.3	4.2	5.0	
- 400	C-	C-	C-	V	12.0	7.6	5.0	3.6	3.2	3.7	4.8	
- 200	C-	C-	P	13.3	8.2	5.2	3.5	2.7	2.8	3.5	4.7	
- 100	C-	C-	16.7	10.2	6.3	3.9	3.1	2.9	2.6	3.4	4.7	
- 50	C-	C-	14.3	8.6	5.2	3.6	3.3	2.9	2.6	3.4	4.7	
- 25	C-	C-	13.1	7.8	4.7	3.6	3.1	2.8	2.5	3.4	4.7	
- 12.5	C-	C-	12.4	7.4	4.5	3.9	3.5	2.8	2.5	3.4	4.7	
- 6.25	C-	C-	12.1	7.2	4.4	3.8	3.5	2.7	2.5	3.4	4.7	
-3.125	C-	19.8	11.9	7.1	4.7	3.8	3.5	2.7	2.5	3.4	4.7	
0	C-	19.6	11.8	7.0	4.7	3.7	3.4	2.7	2.5	3.4	4.7	
3.125	C-	19.3	11.6	6.9	4.6	3.7	3.4	2.7	2.5	3.4	4.7	
6.25	C-	19.1	11.4	6.8	4.5	3.7	3.4	2.9	2.5	3.4	4.7	
12.5	C-	18.6	11.1	6.6	4.4	4.2	3.3	2.9	2.5	3.4	4.7	
25	C-	17.6	10.4	6.2	4.7	4.0	3.2	2.8	2.5	3.4	4.7	
50	C-	15.5	9.1	6.1	4.9	3.7	3.4	2.7	2.4	3.3	4.7	
100	P	11.0	7.6	6.5	4.9	3.9	3.4	2.9	2.4	3.3	4.7	
200	V	V	8.3	7.0	5.3	3.9	3.6	2.8	2.3	3.3	4.7	
400	P	V	V	V	V	5.4	3.6	3.5	2.3	3.3	4.6	
800	P	P	P	V	V	V	2.3	2.3	2.6	3.4	4.7	
1600						L+	2.5	3.6	3.9	4.0	4.9	
3200						L+	L+	L+	L+	5.5	5.9	

Loss percentage for Tee-network, series cap., shunt inductor, series cap.
Freq: 29.7 MHz, Z0: 50, 1500W, Vmax: 4500 V, Qu: 200 , Qc: 1000
Var. Cap: 42 to 251 pF with switched 160/80 m output cap.: 0 pF

Xa	3.125	6.25	12.5	25	50	100	200	400	800	1600	3200	Ra
- 3200	C-	C-	C-	C-	C-	C-	C-	C-	C-	C-	C-	
- 1600	C-	C-	C-	C-	C-	C-	C-	C-	C-	C-	C-	
- 800	C-	C-	C-	C-	C-	C-	C-	C-	C-	C-	C-	
- 400	C-	C-	C-	C-	C-	C-	C-	C-	C-	C-	C-	
- 200	C-	C-	C-	C-	C-	C-	C-	C-	C-	C-	C-	
- 100	C-	C-	C-	C-	2.7	1.8	1.6	C-	C-	C-	C-	
- 50	C-	C-	C-	2.6	1.6	1.2	1.3	C-	C-	C-	C-	
- 25	C-	5.3	2.9	1.7	1.1	1.0	1.2	C-	C-	C-	C-	
- 12.5	7.1	3.9	2.1	1.1	0.8	0.9	1.1	C-	C-	C-	C-	
- 6.25	6.0	3.2	1.7	1.0	0.6	0.8	1.1	C-	C-	C-	C-	
-3.125	5.4	2.8	1.4	1.0	0.6	0.8	1.1	C-	C-	C-	C-	
0	4.7	2.5	1.6	1.0	0.6	0.8	1.1	C-	C-	C-	C-	
3.125	4.1	2.4	1.7	1.1	0.6	0.7	1.1	C-	C-	C-	C-	
6.25	3.4	2.4	1.5	1.0	0.6	0.7	1.1	C-	C-	C-	C-	
12.5	3.4	2.9	2.0	1.1	0.6	0.7	1.1	C-	C-	C-	C-	
25	4.6	3.2	2.0	1.3	0.6	0.6	1.0	C-	C-	C-	C-	
50	5.2	3.9	2.0	1.6	0.7	0.5	1.0	C-	C-	C-	C-	
100	8.9	4.8	2.5	C+	0.9	0.5	1.0	C-	C-	C-	C-	
200						0.7	1.1	C-	C-	C-	C-	
400						C-	C-	C-	C-	C-	C-	
800						C-	C-	C-	C-	C-	C-	
1600						C-	C-	C-	C-	C-	C-	
3200						L+	C-	C-	C-	C-	C-	

Fig 10—Sample printout from the AAT program, showing 3.5 and 29.7-MHz simulations for a T-network antenna tuner using 42-251 pF variable tuning capacitors (including 10 pF of stray), with voltage rating of 4500 V and 28 μH roller inductor. The load varies from 3.125 – j 3200 Ω to 3200 + j 3200 Ω in geometric steps. Symbol "L+" indicates that a match is impossible because more inductance is needed. "C–" indicates that the minimum capacity is too large. "V" indicates that the voltage rating of a capacitor has been exceeded. "P" indicates that the power rating limit set by the operator to 20% has been exceeded. A blank indicates that matching is not possible at all, probably for a variety of simultaneous reasons.

Loss percentage for Tee-network, series cap., shunt inductor, series cap.
Freq: 3.5 MHz, Z0: 50, 1500W, Vmax: 3000 V, Qu: 200 , Qc: 1000
Var. Cap: 25 to 402 pF with switched 160/80 m output cap.: 400 pF

Xa	3.125	6.25	12.5	25	50	100	200	400	800	1600	3200	Ra
- 3200	L+	L+	L+	L+		L+	L+	L+	L+	V	V	
- 1600	L+	L+	L+	L+		L+	V	V	V	V	V	
- 800	C-	L+	L+	L+	V	V	V	4.9	3.9	4.0	V	
- 400	C-	L+	L+	V	V	6.0	4.0	3.0	2.9	3.6	V	
- 200	C-	L+	V	9.0	5.5	3.5	2.5	2.2	2.6	3.4	V	
- 100	C-	V	9.6	5.7	3.5	2.3	1.8	1.9	2.4	3.4	V	
- 50	19.7	11.7	6.8	4.0	2.6	2.2	1.8	1.8	2.4	3.3	V	
- 25	16.1	9.3	5.4	3.3	2.7	2.3	1.8	1.7	2.4	3.3	V	
- 12.5	14.1	8.1	4.6	3.4	2.9	2.4	1.9	1.7	2.4	3.3	V	
- 6.25	13.1	7.5	4.2	3.5	2.8	2.4	1.9	1.7	2.3	3.3	V	
-3.125	12.6	7.2	4.3	3.3	2.7	2.3	1.8	1.7	2.3	3.3	V	
0	12.1	6.9	4.4	3.6	3.0	2.3	1.8	1.7	2.3	3.3	V	
3.125	11.6	6.5	4.6	3.4	3.0	2.3	2.0	1.7	2.3	3.3	V	
6.25	11.0	6.2	4.4	3.7	2.9	2.6	2.0	1.7	2.3	3.3	V	
12.5	10.0	6.0	4.4	3.5	2.8	2.5	1.9	1.7	2.3	3.3	V	
25	8.5	5.8	4.7	3.6	3.0	2.4	1.9	1.6	2.3	3.3	V	
50	8.6	6.9	4.7	4.2	3.2	2.3	1.8	1.6	2.3	3.3	V	
100	V	V	6.3	4.4	3.2	2.5	1.9	1.5	2.3	3.3	V	
200	V	V	V	V	4.2	2.6	2.0	1.5	2.3	3.3	V	
400	P	V	V	V	V	1.1	1.5	1.7	2.3	3.3	V	
800	P	P	P	V	V	V	2.3	2.6	2.7	3.4	V	
1600	P	P	P	V	V	V	V	V	V	4.1	V	
3200						L+	L+	L+	V	V	V	

Loss percentage for Tee-network, series cap., shunt inductor, series cap.
Freq: 29.7 MHz, Z0: 50, 1500W, Vmax: 3000 V, Qu: 200 , Qc: 1000
Var. Cap: 25 to 402 pF with switched 160/80 m output cap.: 400 pF

Xa	3.125	6.25	12.5	25	50	100	200	400	800	1600	3200	Ra
- 3200	C-	C-	C-	C-		C-	C-	C-	C-	C-	C-	
- 1600	C-	C-	C-	C-	C-	C-	C-	C-	C-	C-	C-	
- 800	C-	C-	C-	C-	C-	C-	C-	C-	C-	C-	C-	
- 400	C-	C-	C-	C-	C-	C-	C-	2.8	C-	C-	C-	
- 200	C-	C-	C-	C-	4.6	2.9	2.2	2.1	2.5	C-	C-	
- 100	C-	C-	C-	4.1	2.5	1.7	1.5	1.8	2.4	C-	C-	
- 50	C-	6.9	3.9	2.3	1.4	1.1	1.3	1.7	2.3	C-	C-	
- 25	7.7	4.3	2.4	1.3	0.9	0.9	1.2	1.6	2.3	C-	C-	
- 12.5	5.4	2.9	1.5	0.8	0.6	0.8	1.1	1.6	2.3	C-	C-	
- 6.25	4.1	2.1	1.3	0.8	0.5	0.7	1.1	1.6	2.3	C-	C-	
-3.125	3.5	1.9	1.4	0.8	0.4	0.7	1.1	1.6	2.3	C-	C-	
0	2.8	1.9	1.4	1.0	0.4	0.7	1.1	1.6	2.3	C-	C-	
3.125	3.2	2.0	1.4	0.9	0.4	0.7	1.1	1.6	2.3	C-	C-	
6.25	3.4	1.9	1.5	1.0	0.4	0.6	1.1	1.6	2.3	C-	C-	
12.5	3.4	2.1	1.4	1.1	0.4	0.6	1.0	1.6	2.3	C-	C-	
25	4.6	2.3	1.5	1.0	0.5	0.6	1.0	1.6	2.3	C-	C-	
50	5.2	3.9	2.0	1.6	0.5	0.5	1.0	1.5	2.3	C-	C-	
100	V	5.6	3.0	1.6	1.0	0.5	0.9	1.5	2.3	C-	C-	
200	V				0.7	0.8	1.1	1.5	2.2	C-	C-	
400						1.2	1.6	1.8	2.3	C-	C-	
800						C-	C-	C-	C-	C-	C-	
1600						C-	C-	C-	C-	C-	C-	
3200						L+	C-	C-	C-	C-	C-	

Fig 11—Another sample AAT program printout, using a dual-section variable capacitor whose overall tuning range when in parallel varies from 25 to 402 pF, but with a 3000-V rating. The same 28 μH roller is used, but an auxiliary 400 pF fixed capacitor can now be manually switched across the output variable capacitor. Note that the overall matching range has in effect been shifted over to the left from that in Fig 10 for the lower frequency because the maximum output capacitance is higher. The range has been extended on the highest frequency because the minimum capacitance is smaller.

such execution-time considerations, *AAT* does an *extensive* search, but not an *exhaustive* one.

Once all impedance points have been tried, *AAT* writes the results to two disk files—one is a summary file (TEENET.SUM, in this example) and the other is a detailed log (TEENET.LOG) of successful matches, and matches that came close except for exceeding a voltage rating. **Fig 10** is a sample printout of part of the summary *AAT* output for the 3.5 MHz band and one for the 29.7 MHz band. (The printouts for 1.8 MHz, and the bands from 7.1 to 24.9 MHz are not shown here.) This is for a T-network whose variable capacitors C1 and C3 (including 10-pF stray) range from 42 to 251 pF, each with a voltage rating of 4500 V. The coil is assumed to go up to 28 µH and has an unloaded Q of 200.

The numbers in the "matching map" grid represent the power loss percentage for each impedance where a match is indeed possible. Where a "C–" appears, *AAT* is saying that a match can't be made because the minimum capacity of one or the other variable capacitors is too large. This often happens on the higher frequency bands, but can occur on the lower bands when the power loss is greater than the specified limit and *AAT* continues to try to find a condition where the power loss is lower. It does this until it runs into the minimum-capacitance limit of the input capacitor C1.

Similarly, where a "C+" appears, a match can't be made because the maximum capacity of one or the other variable capacitors is too small. Where an "L+" is placed in the grid, the match fails because more inductance is needed. Where a "V" is shown, the voltage limit for some component has been exceeded. It may be possible in such a circumstance to reduce the power to eliminate arcing. Where "P" is shown, the power limit has been exceeded, meaning that the loss would be excessive. Where a blank occurs, no combination of matching components resulted in a match.

It should be clear that with this particular set of capacitors, the T-network suffers large losses when the load resistance is less than about 12.5 Ω at 3.5 MHz. For example, for a load impedance of $12.5 - j\,100$ Ω the loss is 16.7%. At 1500 W into the tuner, 250 W would be burned up inside, mainly in the coil. It should also be clear that as the reactance increases, the power loss increases, particularly for capacitive reactance. This occurs because the series capacitive reactance of the load adds to the series reactance of C3, and losses rise accordingly.

For most loads, a larger value for the output capacitor C3 decreases losses. Typically, there is a trade-off between the range of minimum-to-maximum capacity and the voltage rating for the variable capacitors that determines the effective impedance-matching range. See **Fig 11**, which assumes that capacitors C1 and C3 have a larger range between minimum to maximum capacity, but with a lower peak voltage rating. Each tuning capacitor is representative of a Johnson 154-507-1 dual-section capacitor, which has a range from 15 to 196 pF in each section, at a peak voltage rating of 3000 V. The two sections are placed in parallel for the lower frequencies. Again, a stray capacitance of 10 pF is assumed for each variable capacitor.

The result at 3.5 MHz in Fig 11 is in a shift of the matching map toward the left. This means that lower values of series load resistance can be matched with lower power loss. However, it also means that the highest value of load resistance, 3200 Ω, now runs into the limitation of the voltage rating of the output capacitor, something that did not happen when the 4500-V capacitors were used in Fig 10.

Now, compare Fig 10 and Fig 11 at 29.7 MHz. The smaller minimum capacity (25 pF) of the capacitors in Fig 11 allows for a wider range of matching impedance, compared with the circuit of Fig 10, where the minimum capacity is 42 pF. This circuit can't match loads with resistances greater than 200 Ω.

Note that *AAT* also allows the operator to specify a switchable fixed-value capacitor across the output capacitor C3 to aid in matching low-resistance loads on the lower frequency bands. In Fig 11, a 400 pF fixed capacitor C4 was assumed to be switched across C3 for the 1.8 and 3.5-MHz bands. **Fig 12** shows the schematic for such a T-network antenna tuner.

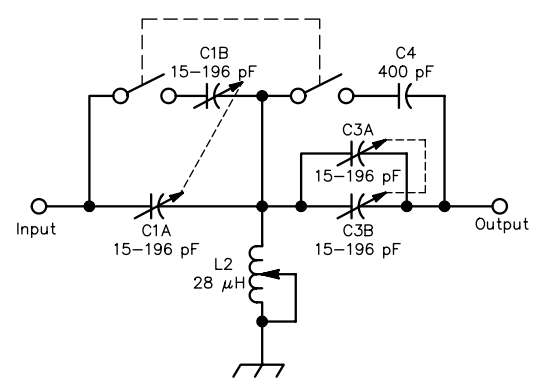

Fig 12—Schematic for the T-network antenna tuner whose tuning range is shown in Fig 11.

The power loss in Fig 11 on 3.5 MHz at a load of 6.25 – *j* 3.125 Ω is 7.2%, while in Fig 10 the loss is 19.7%. On the other hand, the voltage rating of one (or both) capacitors is exceeded for a load with a 3200-Ω resistance. By the way, it isn't exceeded by very much: the computed voltage is 3003 V at 1500 W input, just barely exceeding the 3000-V rating for the capacitor. This is, after all, a strictly literal computer program! Turning down the power just a small amount would stop any arcing.

AAT produces similar tables for Pi-network and L-network configurations, mapping the matching capabilities for the component combinations chosen. All computations are, of course, only as accurate as the assumed values for unloaded Q_U in the components. The unloaded Q_U of variable inductors can vary quite a bit over the full amateur MF and HF frequency range. Computations produced by *AAT* have been compared to measured results on real antenna tuners and they correlate well when measured values for unloaded inductor Q_U are plugged into *AAT*. Individual antenna tuners may well vary, depending on what sort of stray inductance or capacitance is introduced during construction.

A Low-Power Link-Coupled Antenna Tuner

Link coupling offers many advantages over other types of systems where a direct connection between the transmitter and antenna is required, using a balanced type of transmission line. This is particularly true at 3.5 MHz, where commercial broadcast stations often induce sufficient voltage to cause either rectification or front-end overload. Transceivers and receivers that show this tendency can usually be cured by using only magnetic coupling between the transceiver and antenna system. There is no direct connection, and better isolation results, along with the inherent band-pass characteristics of magnetically coupled tuned circuits.

Although link coupling can be used with either single-ended or balanced antenna systems, its most common application is with balanced feed. The model shown here is designed for 3.5 through 28-MHz operation.

The Circuit

The antenna tuner network shown in **Figs 13** through **15** is a band-switched link coupler. L2 is the link and C1 is used to adjust the coupling. S1B

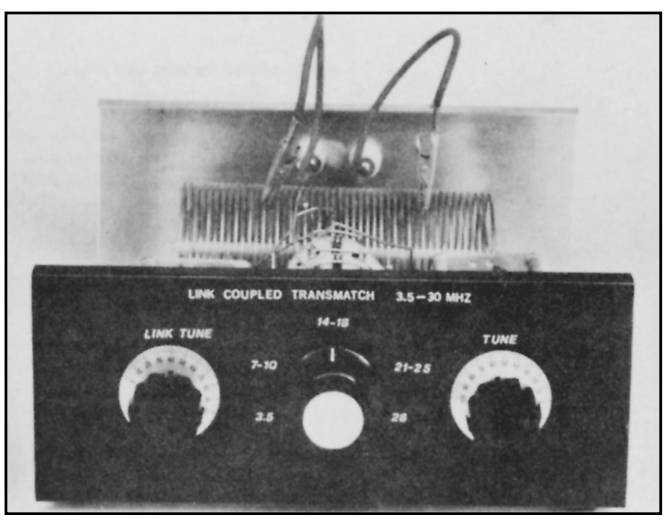

Fig 13—Exterior view of the band-switched link coupler. Alligator clips are used to select the proper tap positions of the coil.

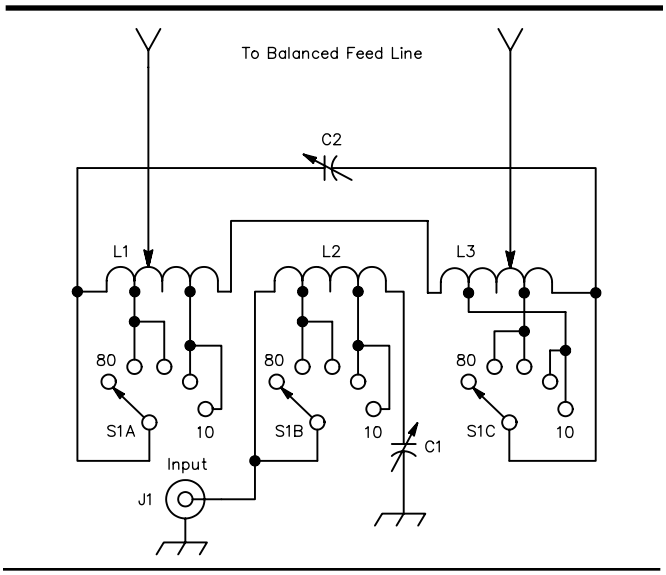

Fig 14—Schematic diagram of the link coupler. The connections marked as "to balanced feed line" are steatite feedthrough insulators. The arrows on the other ends of these connections are alligator clips.

C1—350 pF maximum, 0.0435-inch plate spacing or greater.

C2—100 pF maximum, 0.0435-inch plate spacing or greater.

J1—Coaxial connector.

L1, L2, L3—B&W 3026 Miniductor stock, 2-inch diameter, 8 turns per inch, #14 wire. Coils assembly consists of 48 turns, L1 and L3 are each 17 turns tapped at 8 and 11 turns from outside ends. L2 is 14 turns tapped at 8 and 12 turns from C1 end. See text for additional details.

S1—3-pole, 5-position ceramic rotary switch.

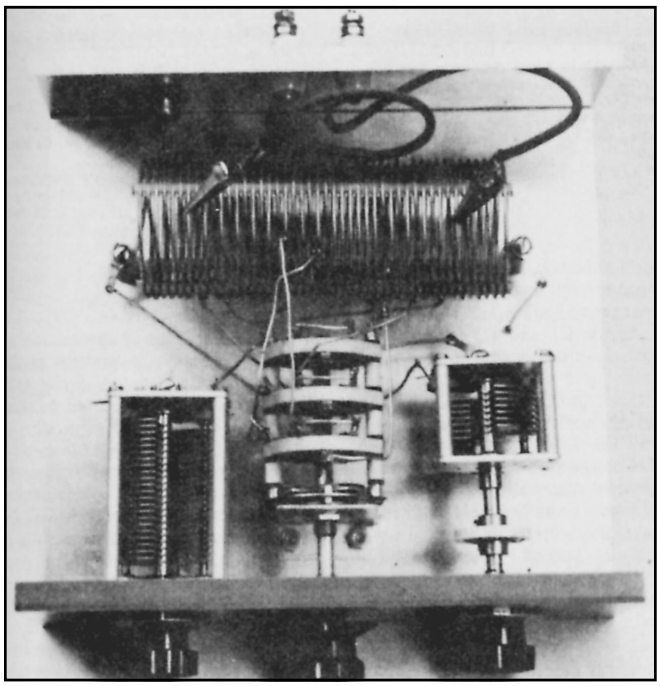

Fig 15—Interior view of the link-coupled tuner, showing the basic positions of the major components. Component placement is not critical, but the unit should be laid out for minimum lead lengths.

selects the proper amount of link inductance for each band. L1 and L3 are located on each side of the link and are the coils to which the antenna is connected. Alligator clips are used to connect the antenna to the coil because antennas of different impedances must be connected at different points (taps) along the coil. Also, with most antennas it will be necessary to change taps for different bands of operation. C2 tunes L1 and L3 to resonance at the operating frequency.

Switch sections S1A and S1C select the amount of inductance necessary for each of the HF bands. The inductance of each of the coils has been optimized for antennas in the impedance range of roughly 20 to 600 Ω. Antennas that exhibit impedances well outside this range may require that some of the fixed connections to L1 and L3 be changed. Should this be necessary, remember that the L1 and L3 sections must be kept symmetrical—the same number of turns on each coil.

Construction

The unit is housed in a homemade aluminum enclosure that measures $9 \times 8 \times 3^1/_2$ inches. As can be seen from the schematic, C2 must be isolated from ground. This can be accomplished by mounting the capacitor on steatite cones or other suitable insulating material. Make sure that the hole through the front panel for the shaft of C2 is large enough so the shaft does not make contact with the chassis.

Tune-Up

The transmitter should be connected to the input of the antenna tuner through some sort of instrument that will indicate SWR. Set S1 to the band of operation, and connect the balanced line to the insulators on the rear panel of the coupler. Attach alligator clips to the mid points of coils L1 and L3, and apply power. Adjust C1 and C2 for minimum reflected power. If a good match is not obtained, move the antenna tap points either closer to the ends or center of the coils. Again apply power and tune C1 and C2 until the best possible match is obtained. Continue moving the antenna taps until a 1:1 match is obtained.

The circuit described here is intended for power levels up to roughly 200 W. Balance was checked by means of two RF ammeters, one in each leg of the feed line. Results showed the balance to be well within 1 dB.

High-Power ARRL Antenna Tuner for Unbalanced Lines

As stated previously, most modern transmitters are designed to operate into unbalanced loads of 50 Ω. An antenna tuner is often needed to match impedances that deviate from this value. An example is a 3.5-MHz dipole antenna, cut for resonance at 3.6 MHz and fed with RG-213 coaxial cable. If this antenna is used in the upper part of the 3.8-MHz phone band, the SWR is fairly high, probably about 6:1.

An antenna tuner will not correct the actual SWR condition on the above-mentioned line. However, it will resonate the antenna system and allow the transmitter to deliver full power to the load. Although there will be a small additional loss caused by the SWR on the line, it will be almost negligible at this frequency and this level of SWR.

The ARRL Antenna Tuner circuit of **Fig 16** operates from 1.8 to 30 MHz into unbalanced, coax-fed loads. Great care has been taken to minimizing loss through this antenna tuner over a wide range of loads, as discussed earlier in this chapter in the section describing the *AAT* computer program.

Construction

The cabinet for the prototype antenna tuner was made out of wood. The main concern building the prototype was to keep the components boxed up so that nobody could accidentally come in contact with them. However, we do recommend that you build your tuner inside an aluminum cabinet, with lots of clearance between components and the chassis itself to prevent arcing and stray capacity to ground.

The conductors joining the components should be of heavy gauge material to minimize stray inductance and heating. The shield braid from RG-59 coax was used in the prototype for the wiring between the switch and the related components. Quarter-inch wide strips of flashing copper are also suitable for the conductor straps.

All leads should be kept as short as possible to help prevent degradation of the circuit Q. The stators of C1 and C3 should face toward the cabinet cover to minimize the stray capacitance between the capacitor plates and the bottom of the cabinet (important at the upper end of the tuner's frequency range when a metal cabinet is used). Insulated ceramic shaft couplings are used between the reduction drives and C1 and C3.

S1 is attached to the cabinet with two metal standoff posts. S1 is a special high-voltage RF switch from Radio Switch Corporation, with four poles and three positions. It is not inexpensive! A more

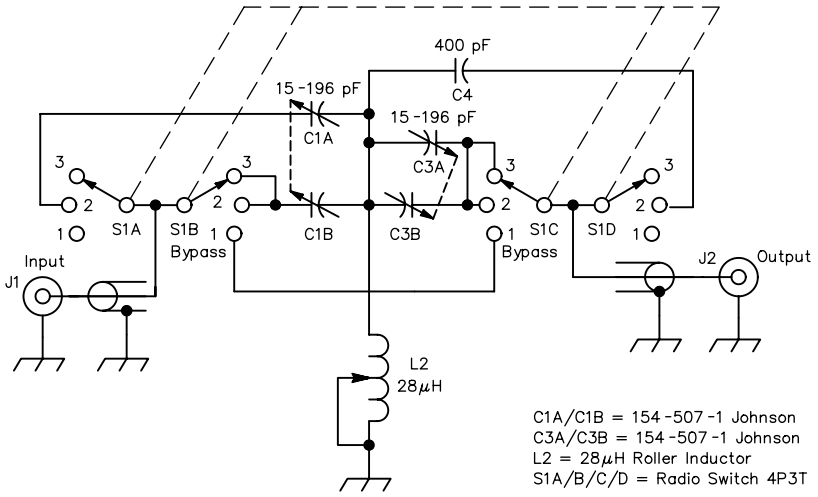

Fig 16—Schematic diagram of the ARRL Antenna Tuner.

C1, C3—15-196 pF dual-section transmitting variable with voltage rating of 3000 V peak. E. F. Johnson 154-507-1 used here.

C4—Home-made 400 pF capacitor; more than 10 kV voltage breakdown. Made from plate glass, sandwiched in between two aluminum plates mounted on standoff insulators.

L2—Rotary inductor, 28 μH inductance, E. F. Johnson 229-203, with ceramic coil form.

frugal ham might want to substitute two more common DPDT switches for S1. One would bypass the network when the operator desires to do that. The other would switch the additional 400 pF fixed capacitor across variable C3 and also parallel both sections of C1 together for the lower frequencies. Both switches would have to be capable of handling high RF voltages, of course.

The 400 pF fixed capacitor C4 that is switched across variable output capacitor C3 is a home-brew unit, made out of aluminum plate sandwiching a piece of plate glass. This makes a high-voltage capacitor that is also stable for temperature changes.

Operation

The ARRL Antenna Tuner shown here is designed to handle the output from transmitters that operate up to 1.5 kW. An SWR indicator is used between the transmitter and the antenna tuner to show when a matched condition is attained. The builder may want to integrate an SWR meter in the tuner circuit between J1 and the arm of S1A (Fig 16).

Never "hot switch" an antenna tuner, as this can damage both transmitter and tuner. For initial setting below 10 MHz, set S1 to position 2 and C1 at midrange, C3 at full mesh. With a few watts of RF, adjust L1 for a decrease in reflected power. Then adjust C1 and L2 alternately for the lowest possible SWR, adjusting C3 if necessary too. If a satisfactory SWR cannot be achieved, try S1 at position 3 and repeat the steps above. Finally, increase the transmitter power to maximum and touch up the tuner's controls if necessary. When tuning, keep your transmissions brief and identify your station.

For operation above 10 MHz, again initially use S1 set to position 2, and if SWR cannot be lowered properly, try S1 set to position 3. This will probably be necessary for 24 or 28-MHz operation. In general, you want to set C3 for as much capacitance as possible, especially on the lower frequencies. This will result in the least amount of loss through the antenna tuner. The first position of S1 permits switched-through operation direct to the antenna when the antenna tuner is not needed.

Further Comments About the ARRL Antenna Tuner

Surplus coils and capacitors are suitable for use in this circuit. L1 should have at least 25 μH of inductance, and the tuning capacitors need to have 400 pF or more of capacitance per section at a breakdown voltage of at least 3000 V. Insertion loss through this Transmatch was a bit difficult to measure, since it was low. The worst-case load tested was four 50-Ω dummy loads in parallel to make a 12.5-Ω load at 1.8 MHz. Running 1000 W keydown for a minute produced definite heating in the variable inductor, but not so much that you couldn't keep your hand on the coil without burning yourself. At higher frequencies and at a 50-Ω load at 1.8 MHz, the coil was barely warm to the touch at 1000 W keydown for a minute.

BIBLIOGRAPHY

Source material and more extended discussion of topics covered in this chapter can be found in the references given below and in the textbooks listed at the end of Chapter 2.

D. K. Belcher, "RF Matching Techniques, Design and Example," *QST*, Oct 1972, p 24.

W. Bruene, "Introducing the Series-Parallel Network," *QST*, June 1986, p 21.

T. Dorbuck, "Matching-Network Design," *QST*, Mar 1979, p 26.

G. Grammer, "Simplified Design of Impedance-Matching Networks," in three parts, *QST*, Mar, Apr, May 1957.

M. W. Maxwell, "Another Look at Reflections," *QST*, Apr, Jun, Aug, and Oct 1973; Apr and Dec 1974, and Aug 1976.

B. Pattison, "A Graphical Look at the L Network," *QST*, Mar 1979.

E. Wingfield, "New and Improved Formulas for the Design of Pi and Pi-L Networks," *QST*, Aug 1983, p 23.