FUNAI

SERVICE MANUAL

Sec. 1: Main Block

- Specifications
- Preparation for Servicing
- Adjustment Procedures
- Schematic Diagrams
- CBA' s
- Exploded Views
- Parts List

Sec. 2: Deck Mechanism Block

- Standard Maintenance
- Alignment for Mechanism
- Disassembly / Assembly of Mechanism
- Deck Schematic Diagram
- Deck CBA' s
- Deck Exploded Views
- Deck Parts List

VIDEO CASSETTE PLAYER

VIP-5000HC MKII / VIP-5000A MKII / VCP-500D / VCP-500 / VIP-5000LR

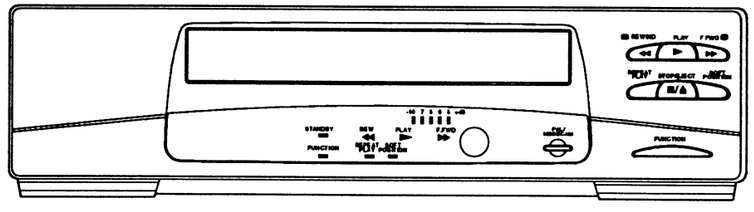

VIP-8000K MKII

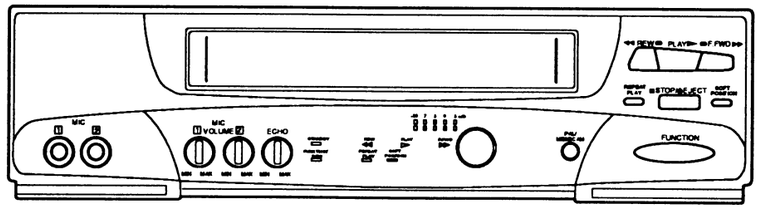

VHS PAL

MAIN BLOCK

VIDEO CASSETTE PLAYER

VIP-5000HC MKII / VIP-5000A MKII / VCP-500D / VCP-500 / VIP-5000LR / VIP-8000K MKII

Sec. 1: Main Block

- Specifications
- Preparation for Servicing
- Adjustment Procedures
- Schematic Diagrams
- CBA's
- Exploded Views
- Parts List

TABLE OF CONTENTS

SPECIFICATIONS (MODELS : A, B, C, D, F)

COMPARISON CHART OF MODELS AND MARKS

MODEL	MARK
VIP-5000HC MKII	A
VIP-5000A MKII	B
VCP-500D	C
VCP-500	D
VIP-5000LR	E
VIP-8000K MKII	F

Description	Unit	Minimum	Nominal	Maximum	Remark
1. Video					
1-1. Video Output	Vp-p	0.8	1.0	1.2	
1-2. Video S/N Y	dB	40	45		SP Mode
1-3. Video Color S/N AM	dB	35	44		SP Mode
1-4. Video Color S/N PM	dB	31	38		SP Mode
1-5. Resolution	Line	230	240		SP Mode
2. Servo					
2-1. Jitter Low	µsec		0.05	0.12	SP Mode
2-2. Wow & Flutter	%		0.2	0.6	SP Mode
3. Normal Audio					
3-1. Output	dBV	-10	-6	-2	SP mode
3-2. S/N	dB	36	40		SP mode
3-3. Distortion	%		1.5	4.0	SP mode
3-4. Freq. resp at 200Hz	dB	-6	-3		SP mode
(-20dB ref. 1kHz) at 6kHz	dB	-6	-2		SP mode

Note: Nominal specs represent the design specs. All units should be able to approximate these – some will exceed and some may drop slightly below these specs. Limit specs represent the absolute worst condition that still might be considered acceptable; In no case should a unit fail to meet limit specs.

SPECIFICATIONS (MODEL : E)

COMPARISON CHART OF MODELS AND MARKS

MODEL	MARK
VIP-5000HC MKII	A
VIP-5000A MKII	B
VCP-500D	C
VCP-500	D
VIP-5000LR	E
VIP-8000K MKII	F

Description	Unit	Minimum	Nominal	Maximum	Remark
1. Video					
1-1. Video Output (PB)	Vp-p	0.8	1.0	1.2	F6-A
1-2. Video Output (R/P)	Vp-p	0.8	1.0	1.2	
1-3. Video S/N Y (R/P)	dB	40	45		HPF:100Hz
INPUT:50% WHITE					LPF:5MHz
					SC TRAP ON
1-4. Video Color S/N AM (R/P)	dB	35	41		HPF:100Hz
1-5. Video Color S/N PM (R/P)	dB	30	36		LPF:500KHz
INPUT:100% Color					SC TRAP ON
1-6. Resolution (PB)	Line	230	240		F6-M
2. Servo					
2-1. Jitter Low	µsec		0.07	0.12	F6-N
2-2. Wow & Flutter	%		0.3	0.6	E-30, CCIR, WTD
3. Normal Audio					
3-1. Output (PB)	dBV	-10	-6	-2	F6-A
3-2. Output (R/P)	dBV	-10	-6	-1.5	
3-3. S/N (R/P)	dB	36	40		
3-4. Distortion (R/P)	%		1.5	4.0	INPUT:-10dBV
3-5. Freq. resp (R/P) at 200Hz	dB	-6	-3		
(-20dB ref. 1kHz) at 6kHz	dB	-6	-3		

Note: Nominal specs represent the design specs. All units should be able to approximate these – some will exceed and some may drop slightly below these specs. Limit specs represent the absolute worst condition that still might be considered acceptable; In no case should a unit fail to meet limit specs.

IMPORTANT SAFETY PRECAUTIONS

Product Safety Notice

Some electrical and mechanical parts have special safety-related characteristics which are often not evident from visual inspection, nor can the protection they give necessarily be obtained by replacing them with components rated for higher voltage, wattage, etc. Parts that have special safety characteristics are identified by a ⚠ on schematics and in parts lists. Use of a substitute replacement that does not have the same safety characteristics as the recommended replacement part might create shock, fire, and/or other hazards. The Product's Safety is under review continuously and new instructions are issued whenever appropriate. Prior to shipment from the factory, our products are carefully inspected to confirm with the recognized product safety and electrical codes of the countries in which they are to be sold. However, in order to maintain such compliance, it is equally important to implement the following precautions when a set is being serviced.

Precautions during Servicing

A. Parts identified by the ⚠ symbol are critical for safety.
Replace only with part number specified.

B. In addition to safety, other parts and assemblies are specified for conformance with regulations applying to spurious radiation. These must also be replaced only with specified replacements.
Examples: RF converters, RF cables, noise blocking capacitors, and noise blocking filters, etc.

C. Use specified internal wiring. Note especially:
1) Wires covered with PVC tubing
2) Double insulated wires
3) High voltage leads

D. Use specified insulating materials for hazardous live parts. Note especially:
1) Insulation tape
2) PVC tubing
3) Spacers
4) Insulators for transistors

E. When replacing AC primary side components (transformers, power cord, etc.), wrap ends of wires securely about the terminals before soldering.

F. Observe that the wires do not contact heat producing parts (heatsinks, oxide metal film resistors, fusible resistors, etc.).

G. Check that replaced wires do not contact sharp edges or pointed parts.

H. When a power cord has been replaced, check that 10-15 kg of force in any direction will not loosen it.

I. Also check areas surrounding repaired locations.

J. Use care that foreign objects (screws, solder droplets, etc.) do not remain inside the set.

K. Crimp type wire connector
The power transformer uses crimp type connectors which connect the power cord and the primary side of the transformer. When replacing the transformer, follow these steps carefully and precisely to prevent shock hazards.
Replacement procedure
1) Remove the old connector by cutting the wires at a point close to the connector.
Important: Do not re-use a connector. (Discard it.)
2) Strip about 15 mm of the insulation from the ends of the wires. If the wires are stranded, twist the strands to avoid frayed conductors.
3) Align the lengths of the wires to be connected. Insert the wires fully into the connector.
4) Use a crimping tool to crimp the metal sleeve at its center. Be sure to crimp fully to the complete closure of the tool.

L. When connecting or disconnecting the internal connectors, first, disconnect the AC plug from the AC outlet.

Safety Check after Servicing

Examine the area surrounding the repaired location for damage or deterioration. Observe that screws, parts, and wires have been returned to their original positions. Afterwards, do the following tests and confirm the specified values to verify compliance with safety standards.

1. Clearance Distance

When replacing primary circuit components, confirm specified clearance distance (d) and (d') between soldered terminals, and between terminals and surrounding metallic parts. (See Fig. 1)

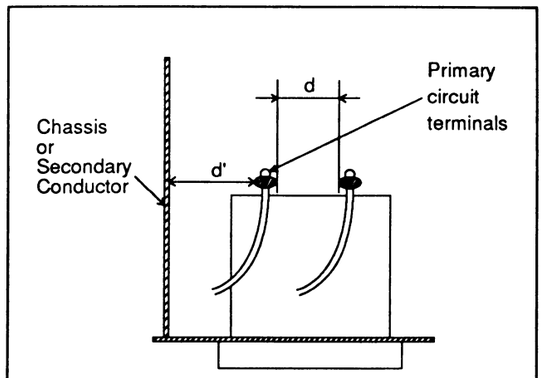

Fig. 1

Table 1 : Ratings for selected area

AC Line Voltage	Region	Clearance Distance (d) (d')
220 to 240 V	Europe or Australia	≥ 4 mm(d) ≥ 6 mm(d')

Note: This table is unofficial and for reference only.
Be sure to confirm the precise values.

2. Leakage Current Test

Confirm the specified (or lower) leakage current between B (earth ground, power cord plug prongs) and externally exposed accessible parts (RF terminals, antenna terminals, video and audio input and output terminals, microphone jacks, earphone jacks, etc.) is lower than or equal to the specified value in the table below.

Measuring Method (Power ON) :
Insert load Z between B (earth ground, power cord plug prongs) and exposed accessible parts. Use an AC voltmeter to measure across the terminals of load Z. See Fig. 2 and the following table.

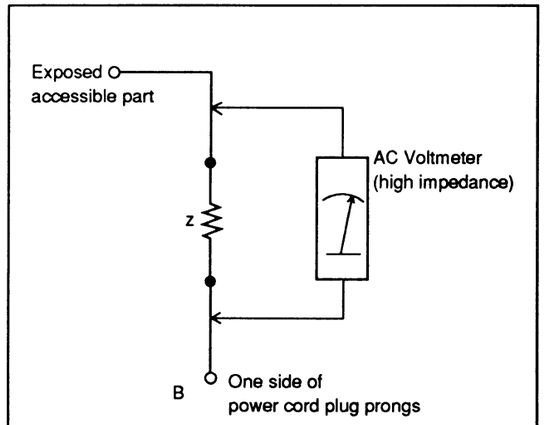

Fig. 2

Table 2 : Leakage current ratings for selected areas

AC Line Voltage	Region	Load Z	Leakage Current (i)	One side of power cord plug prongs (B) to:
220 to 240 V	Europe or Australia	2kΩ RES. Connected in parallel	i≤0.7mA AC Peak i≤2mA DC	RF or Antenna terminals
		50kΩ RES. Connected in parallel	i≤0.7mA AC Peak i≤2mA DC	A/V Input, Output

Note: This table is unofficial and for reference only.
Be sure to confirm the precise values.

STANDARD NOTES FOR SERVICING

Circuit Board Indications

a. The output pin of the 3 pin Regulator ICs is indicated as shown.

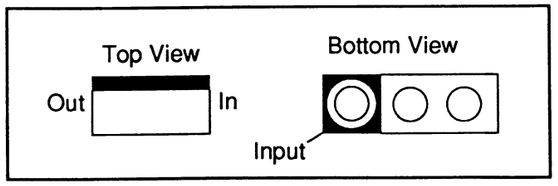

b. For other ICs, pin 1 and every fifth pin are indicated as shown.

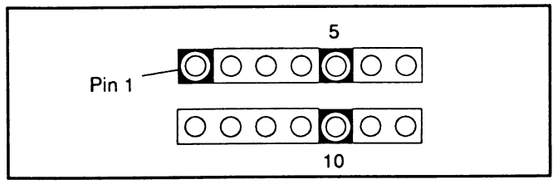

c. The 1st pin of every male connector is indicated as shown.

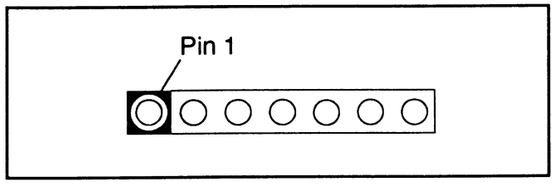

Instructions for Connectors

1. When you connect or disconnect the FFC (Flexible Foil Connector) cable , be sure to first disconnect the AC cord.
2. FFC (Flexible Foil Connector) cable should be inserted parallel into the connector, not at an angle.

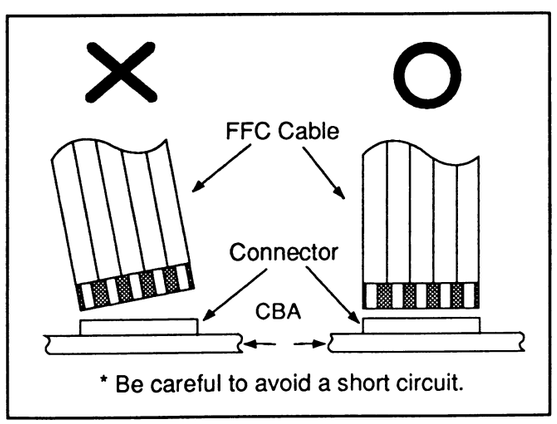

How to Remove / Install Flat Pack IC

1. Removal

With Hot-Air Flat Pack-IC Desoldering Machine:

(1)Prepare the hot-air flat pack-IC desoldering machine, then apply hot air to the Flat Pack-IC (about 5 to 6 seconds). (Fig. S-1-1)

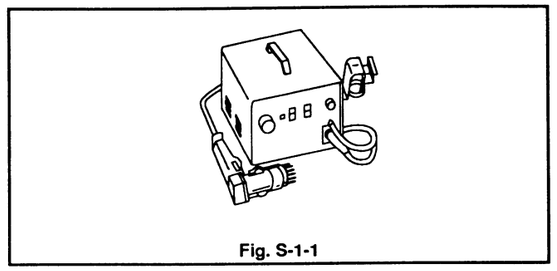

Fig. S-1-1

(2)Remove the flat pack-IC with tweezers while applying the hot air.

Caution:

1. Do not supply hot air to the chip parts around the flat pack-IC for over 6 seconds because damage to the chip parts may occur. Put masking tape around the flat pack-IC to protect other parts from damage. (Fig. S-1-2)

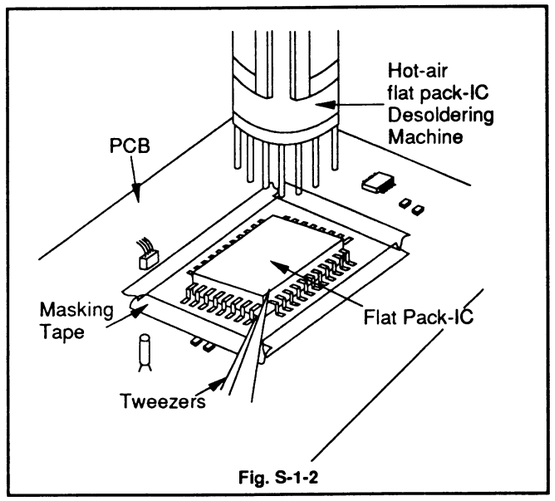

Fig. S-1-2

2. The flat pack-IC on the PCB is affixed with glue, so be careful not to break or damage the foil of each pin or the solder- lands under the IC when removing it.

With Soldering Iron:

(1)Using desoldering braid, remove the solder from all pins of the flat pack-IC. When you use solder flux which is applied to all pins of the flat pack-IC, you can remove it easily. (Fig. S-1-3)

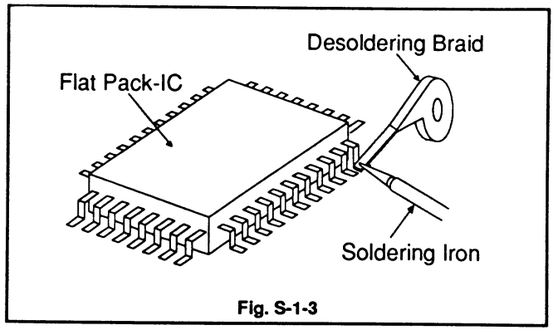

Fig. S-1-3

(2)Lift each lead of the flat pack-IC upward one by one, using a sharp pin or wire to which solder will not adhere (iron wire). When heating the pins, use a fine tip soldering iron or a hot air desoldering machine. (Fig. S-1-4)

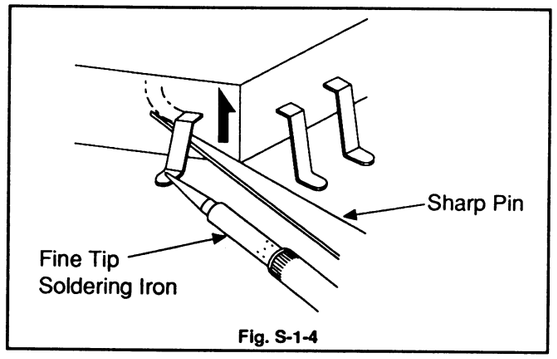

Fig. S-1-4

With Iron Wire:

(1)Using desoldering braid, remove the solder from all pins of the flat pack-IC. When you use solder flux which is applied to all pins of the flat pack-IC, you can remove it easily. (Fig. S-1-3)

(2)Affix the wire to a workbench or solid mounting point, as shown in Fig. S-1-5.

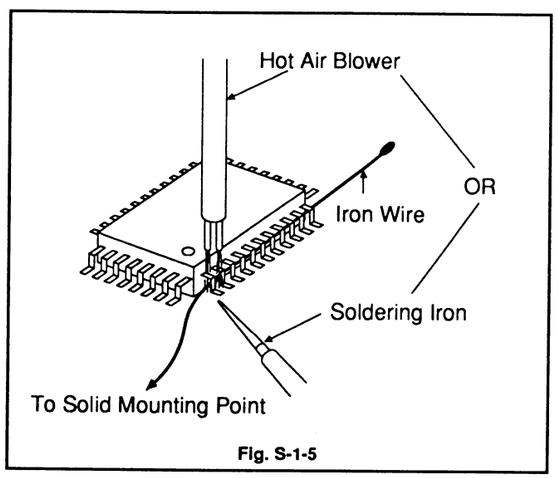

Fig. S-1-5

(3)While heating the pins using a fine tip soldering iron or hot air blower, pull up the wire as the solder melts so as to lift the IC leads from the PCB contact pads as shown in Fig.S-1-5.

Note:

When using a soldering iron, care must be taken to ensure that the flat pack-IC is not being held by glue. When the flat pack-IC is removed from the PCB, handle it gently because it may be damaged if force is applied.

2. Installation

(1)Using desoldering braid, remove the solder from the foil of each pin of the flat pack-IC on the PCB so you can install a replacement flat pack-IC more easily.

(2)The " • " mark on the flat pack-IC indicates pin 1. (See Fig. S-1-6.) Be sure this mark matches the 1 on the PCB when positioning for installation. Then pre- solder the four corners of the flat pack-IC. (See Fig. S-1-7.)

(3)Solder all pins of the flat pack-IC. Be sure that none of the pins have solder bridges.

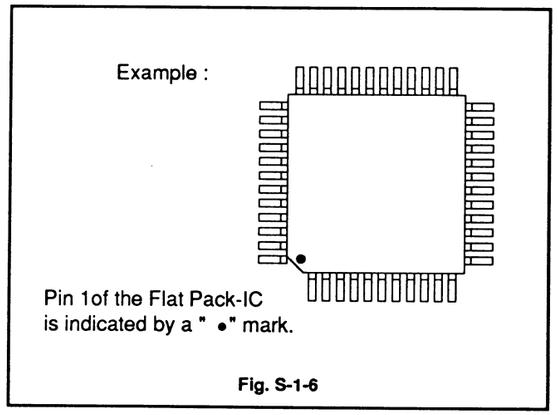

Fig. S-1-6

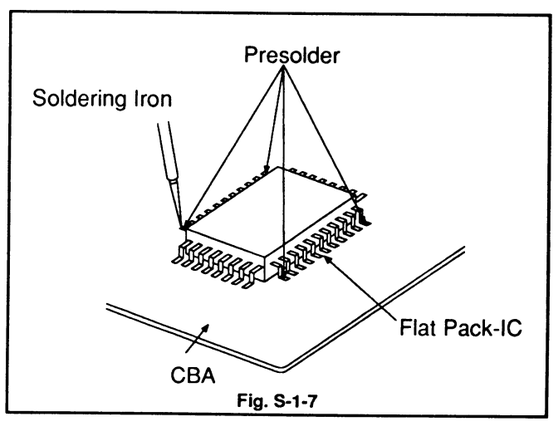

Fig. S-1-7

Instructions for Handling Semiconductors

Electrostatic breakdown of the semiconductors may occur due to a potential difference caused by electrostatic charge during unpacking or repair work.

1. Ground for Human Body

Be sure to wear a grounding band (1M ohm) that is properly grounded to remove any static electricity that may be charged on the body.

2. Ground for Workbench

Be sure to place a conductive sheet or copper plate with proper grounding (1M ohm) on the workbench or other surface, where the semiconductors are to be placed. Because the static electricity charge on clothing will not escape through the body grounding band, be careful to avoid contacting semiconductors with your clothing.

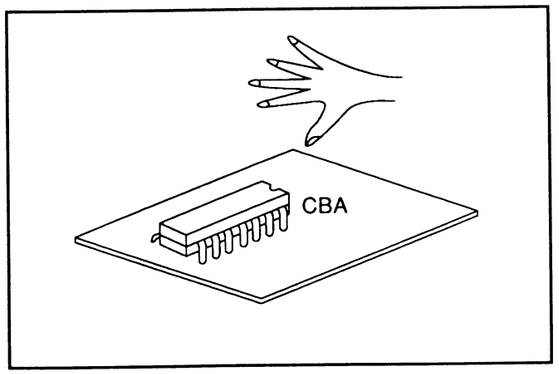

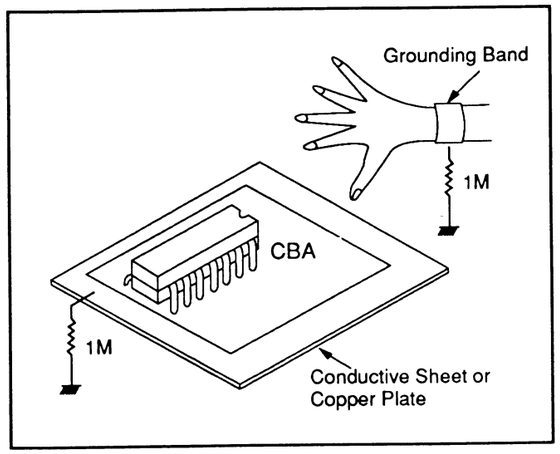

PREPARATION FOR SERVICING

The microprocessor incorporates the program for service mode. Following instructions under "How to set the Service Mode" stops the function of the sensors and enables the deck mechanism assembly to work while it is removed from the Main CBA and just connected to it with the deck extension cable.

How to Use the Deck Extension Cable

(1) Follow instructions under "Cabinet Disassembly Instructions" to remove the deck mechanism assembly from the chassis. If necessary, also remove the Main CBA from the chassis.
(2) Connect the connectors of Head Amp CBA and joint CBA with the connectors of the deck extension cable as shown in the figure below.
(3) Connect the connectors of the Main CBA with the connectors of the deck extension cable as shown in the figure below.

Note: The same deck extension cable is commonly used for both 2 head and 4 head models. However, different connectors should be used depending on whether it is a 2 head model or a 4 head model. This unit is a 4 head model. Carefully look at the figure below and be sure to use the correct connectors.

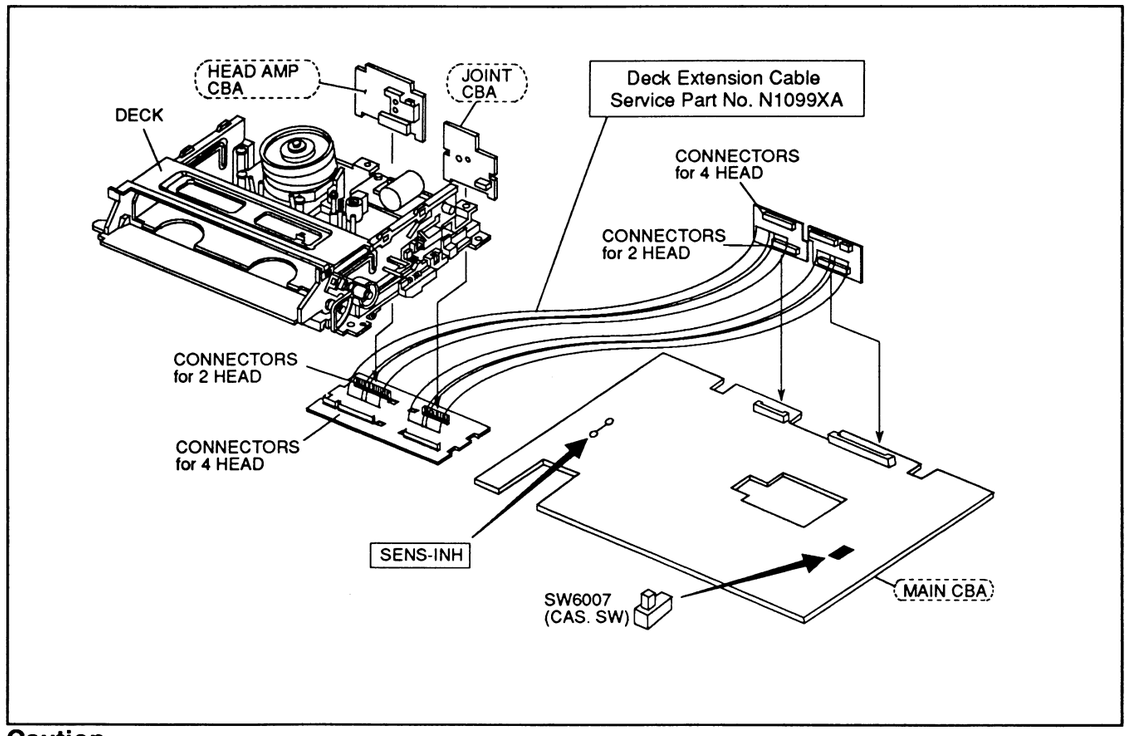

Caution

(1) The deck mechanism assembly and the Main CBA should be placed on a flat, level surface with no electric conductivity.
(2) To insert or eject the tape, press the "CAS. SW" on the Main CBA manually. (See the above figure.)
(3) Do not run a tape all the way either to its start or to its end. Because the Tape End Sensors are not active the tape will keep trying to go further ahead even after its end is reached. This may result in tape damage.

How to set the Service Mode

Ground SENS-INH. This stops the function of all the sensors.

CABINET DISASSEMBLY INSTRUCTIONS

1. Disassembly Flowchart

This flowchart indicates the disassembly steps for the cabinet parts and the CBA in order to gain access to item(s) to be serviced. When reassembling, follow the steps in reverse order. Bend, route and dress the cables as they were.

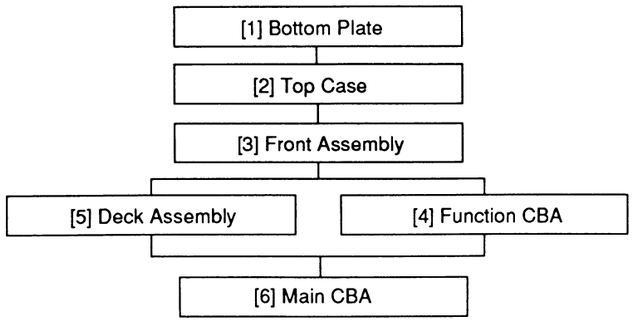

The following table shows which model employs the 3 knobs in Fig. 4.

MODEL	3 Knobs in Fig.4
VIP-5000HC MKII	Not used
VIP-5000A MKII	Not used
VCP-500D	Not used
VCP-500	Not used
VIP-5000LR	Not used
VIP-8000K MKII	Used

2. Disassembly Method

STEP / LOC. No.	PART	REMOVAL		
		Fig. No.	REMOVE/ *UNLOCK/RELEASE/UNPLUG/UNCLAMP/DESOLDER	Note
[1]	Bottom Plate	Fig. 1	4(S-1), *2(L-1)	1
[2]	Top Case	Fig. 2	(S-2)	-
[3]	Front Assembly	Fig. 3, 4	2(S-3), *8(L-2), Deck Holder, 3 Knobs	2
[4]	Function CBA	Fig. 5	(CN5501)	3
[5]	Deck Assembly	Fig. 6	3(S-4), (CN2901, CN3501)	4
[6]	Main CBA	Fig. 7, 8	*(L-3), 2(L-4)	5
①	②	③	④	⑤

NOTE:

①: Order of steps in Procedure
When reassembling, follow the steps in reverse order.
These numbers are also used as the identification (location) number of parts in Figures.

②: Part to be removed or installed.

③: Fig. No. showing Procedure of Part Location.

④: Identification of part to be removed, unhooked, unlocked, released, unplugged, unclamped or desoldered.
S= Screw P= Spring L= Locking Tab CN=Connector
*= Unhook, Unlock, Release, Unplug or Desolder
2 (S-2) = two Screws (S-2)

⑤: Refer to "Reference Notes in the Table" on the next page.

Reference Notes in the Table

1. Remove 4 Screws (S-1), and slide the Bottom Plate in the direction of arrow while pushing 2 Locking Tabs (L-1). (Fig. 1)
2. Remove 2 Screws (S-3), and release 8 Locking Tabs (L-2), then Deck Holder can be removed. (Fig. 3) Remove 3 Knobs if applicable. (See Fig. 4 and the table next to the flowchart on the previous page.) When releasing (L-2), first release the tab (A) on each side, then the two tabs (B) at the bottom, and then the four tabs (C) at the top. (Fig. 3, Fig. 4)
   CAUTION Locking Tabs (L-2) are fragile. Be careful not to break them.
3. Disconnect Connector (CN5501) to remove the Function CBA. Hold the Main CBA while pulling up the Function CBA. (Fig. 5)
4. Remove 3 Screws (S-4). Then slowly lift the Deck Assembly up. Lifting this Deck Assembly will disconnect 2 Connectors (CN2901, CN3501). (Fig. 6)
5. First release Locking Tab (L-3). Then release Locking Tabs (L-4) by pressing them outward as you lift the Main CBA. (Fig. 7, Fig. 8)

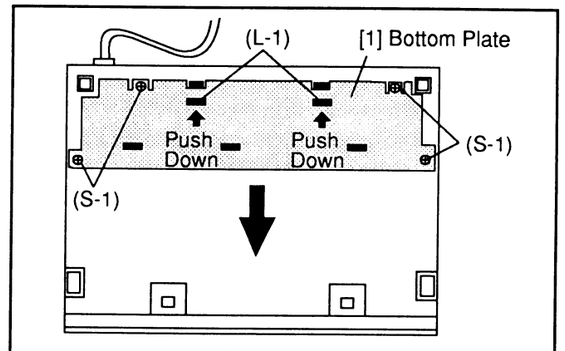

Fig. 1

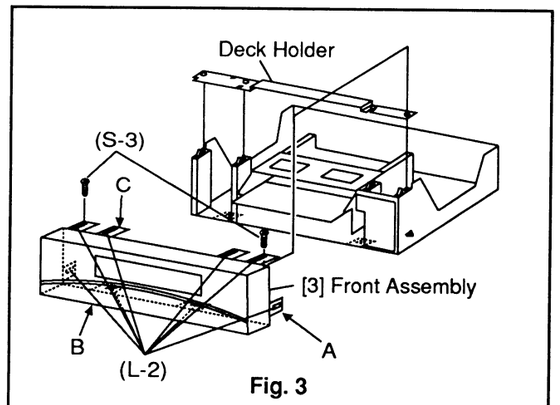

Fig. 3

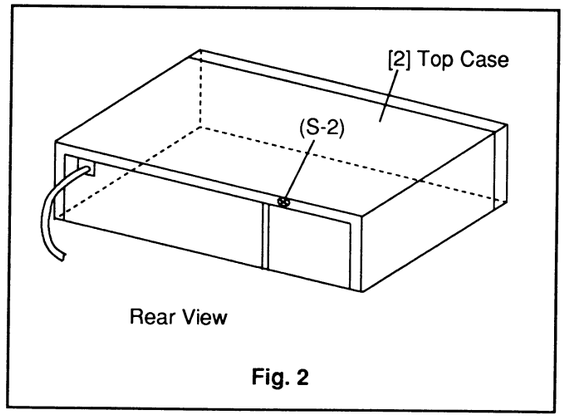

Fig. 2

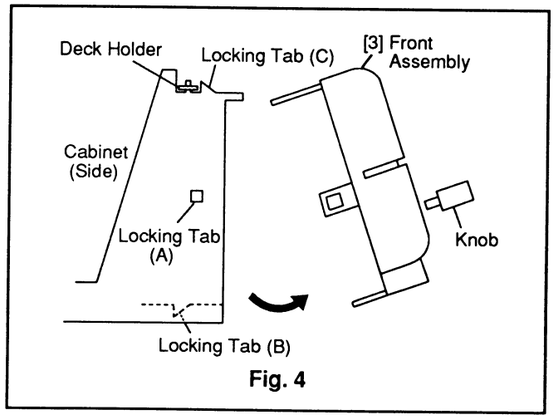

Fig. 4

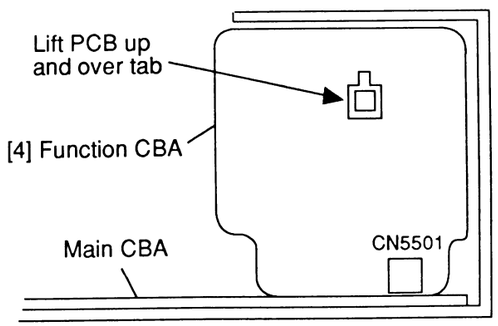

Fig. 5

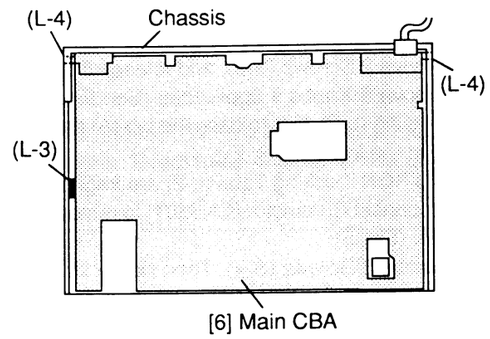

Fig. 7

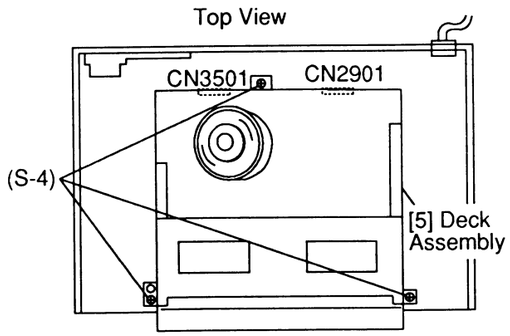

Fig. 6

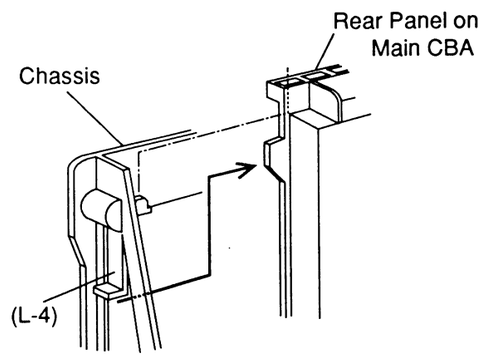

Fig. 8

SCHEMATIC DIAGRAMS / CBA'S AND TEST POINTS

Standard Notes

WARNING

Many electrical and mechanical parts in this chassis have special characteristics. These characteristics often pass unnoticed and the protection afforded by them cannot necessarily be obtained by using replacement components rated for higher voltage, wattage, etc. Replacement parts that have these special safety characteristics are identified in this manual and its supplements; electrical components having such features are identified by the mark " ⚠ " in the schematic diagram and the parts list. Before replacing any of these components, read the parts list in this manual carefully. The use of substitute replacement parts that do not have the same safety characteristics as specified in the parts list may create shock, fire, or other hazards.

Capacitor Temperature Markings

Mark	Capacity change rate	Standard temperature	Temperature range
(B)	±10%	20°C	-25~+85°C
(F)	+30 -80%	20°C	-25~+85°C
(SR)	±15%	20°C	-25~+85°C
(Z)	+30 -80%	20°C	-10~+70°C

Note:

1 Do not use the part number shown on these drawings for ordering. The correct part number is shown in the parts list, and may be slightly different or amended since these drawings were prepared.

2 All resistance values are indicated in ohms ($K=10^3$, $M=10^6$).

3 Resistor wattages are 1/5W or 1/6W unless otherwise specified.

4 All capacitance values are indicated in μF ($P=10^{-6}$μF).

5 All voltages are DC voltages unless otherwise specified.

6 Electrical parts such as capacitors, connectors, diodes, IC's, transistors, resistors, switches, and fuses are identified by four digits. The first two digits are not shown for each component. In each block of the diagram, there is a note such as shown below to indicate these abbreviated two digits.

TUNER BLOCK SYMBOL NO. 70**

Example: "C08" in this "TUNER BLOCK" is C7008.

Capacitors and transistors are represented by the following symbols.

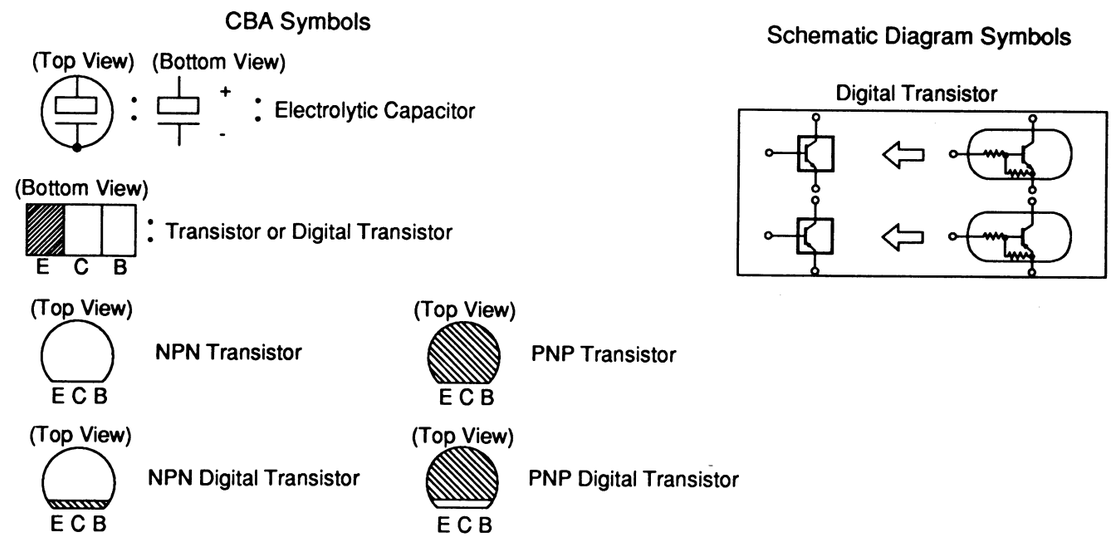

LIST OF CAUTION, NOTES, AND SYMBOLS USED IN THE SCHEMATIC DIAGRAMS ON THE FOLLOWING PAGES:

1. **CAUTION:**
   FOR CONTINUED PROTECTION AGAINST FIRE HAZARD, REPLACE ONLY WITH THE SAME TYPE FUSE.
   ATTENTION: POUR UNE PROTECTION CONTINUE LES RISQES D'INCELE N'UTILISER QUE DES FUSIBLE DE MEMO TYPE.
   RISK OF FIRE-REPLACE FUSE AS MARKED.

2. **CAUTION:**
   Voltage selectable power supply circuit is used in this unit.
   If Main Fuse (F01) is blown, first check to see that all components in the power supply circuit are not defective before you connect the AC plug to the AC power supply. Otherwise it may cause some components in the power supply circuit to fail.

3. **Note:**
(1)Do not use the part number shown on the drawings for ordering. The correct part number is shown in the parts list, and may be slightly different or amended since the drawings were prepared.
(2)To maintain original function and reliability of repaired units, use only original replacement parts which are listed with their part numbers in the parts list section of the service manual.

4. Wire Connectors
(1)Prefix symbol "CN" means "connector." (Can disconnect and reconnect)
(2)Prefix symbol "CL" means "wire-solder holes of the PCB." (Wire is soldered directly.)

5. Note: Mark "•" is a leadless (chip) component.

6. Mode: SP/REC

7. Voltage indications for PLAY and REC modes on the Schematics are as shown below:

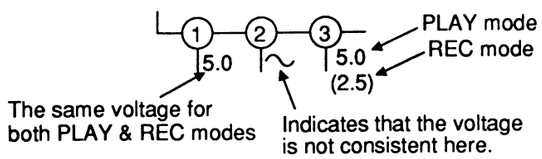

Unit: Volts

8. How to read converged lines

1-D3
- Distinction Area
- Line Number (1 to 3 digits)

Examples:
1. "1-D3" means that line number "1" goes to area "D3".
2. "1-B1" means that line number "1" goes to area "B1".

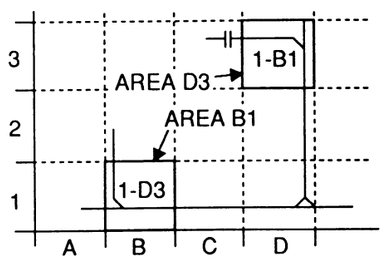

9. Test Point Information

- : Indicates a test point with a jumper wire across a hole in the PCB.
- : Used to indicate a test point with a component lead on foil side.
- : Used to indicate a test point with no test pin.
- : Used to indicate a test point with a test pin.

Ref. No.	Description	Part No.
C 3011	ELECTROLYTIC CAP. 470μF/6.3V M	126A477S
C 3012	CERAMIC CAP. F Z 0.1μF/50V	3F40104T
C 3013	ELECTROLYTIC CAP. 1μF/50V M H7 (VIP-5000HC MKII/VIP-5000A MKII/VCP-500D/VCP-500/VIP-8000K MKII model only)	526W105S
C 3013	ELECTROLYTIC CAP. 10μF/16V M H7 (VIP-5000LR model only)	526T106S
C 3014	CERAMIC CAP. B J 82pF/50V (VIP-5000HC MKII/VIP-5000A MKII/VCP-500D/VCP-500/VIP-5000LR model only)	3B41820T
C 3014	CERAMIC CAP. B J 330pF/50V (VIP-8000K MKII model only)	3B41331T
C 3015	CERAMIC CAP. B J 82pF/50V (VIP-5000HC MKII/VIP-5000A MKII/VCP-500D/VCP-500/VIP-5000LR model only)	3B41820T
C 3015	CERAMIC CAP. S L 22pF/50V (VIP-8000K MKII model only)	3S41220T
C 3016	SEMICONDUCTOR CAP. SR K 0.1μF/25V	12Y2104S
C 3017	ELECTROLYTIC CAP. 1μF/50V M H7	526W105S
C 3018	SEMICONDUCTOR CAP. SR K 0.022μF/25V	12Y2223S
C 3019	ELECTROLYTIC CAP. 4.7μF/25V M H7 (VIP-5000HC MKII/VIP-5000A MKII/VCP-500D/VCP-500 model only)	526U475S
C 3019	ELECTROLYTIC CAP. 1μF/50V M H7 (VIP-5000LR/VIP-8000K MKII model only)	526W105S
C 3020	CERAMIC CAP. Y M 0.01μF/16V or	3Y4D103T
	CERAMIC CAP. F Z 0.01μF/16V	1220842T
C 3021	CERAMIC CAP. SL J 22pF/50V	3S41220T
C 3023	CERAMIC CAP. B J 220pF/50V (VIP-5000HC MKII/VIP-5000A MKII/VCP-500D/VCP-500/VIP-5000LR model only)	3B41221T
C 3024	ELECTROLYTIC CAP. 1μF/50V M H7	526W105S
C 3025	CERAMIC CAP. Y M 0.01μF/16V or	3Y4D103T
	CERAMIC CAP. F Z 0.01μF/16V	1220842T
C 3026	ELECTROLYTIC CAP. 1μF/50V M H7	526W105S
C 3027	ELECTROLYTIC CAP. 47μF/6.3V M H7	526R476S
C 3028	CERAMIC CAP. F Z 0.022μF/25V or	122Z122T
	CERAMIC CAP. F Z 0.022μF/25V	1220843T
C 3029	ELECTROLYTIC CAP. 1μF/50V M H7 (VIP-5000LR model only)	526W105S
C 3030	SEMICONDUCTOR CAP. SR K 0.047μF/25V (VIP-5000LR model only)	12Y2473S
C 3031	ELECTROLYTIC CAP. 1μF/50V M H7	526W105S
C 3032	CERAMIC CAP. F Z 0.022μF/25V or	122Z122T
	CERAMIC CAP. F Z 0.022μF/25V	1220843T
C 3033	CERAMIC CAP. F Z 0.047μF/50V	3F40473T
C 3034	CERAMIC CAP. Y M 0.01μF/16V or	3Y4D103T
	CERAMIC CAP. F Z 0.01μF/16V	1220842T
C 3035	ELECTROLYTIC CAP. 1μF/50V M H7	526W105S
C 3036	ELECTROLYTIC CAP. 10μF/16V M H7	526T106S
C 3037	ELECTROLYTIC CAP. 10μF/16V M H7	526T106S
C 3038	CERAMIC CAP. B J 100pF/50V	3B41101T
C 3039	CERAMIC CAP. SL J 39pF/50V	3S41390T
C 3040	CERAMIC CAP. SL J 33pF/50V	3S41330T
C 3041	CERAMIC CAP. SL J 68pF/50V	3S41680T
C 3043	CERAMIC CAP. B J 390pF/50V (VIP-5000LR model only)	3B41391T
C 3044	ELECTROLYTIC CAP. 1μF/50V M H7	526W105S
C 3045	CERAMIC CAP. SL J 12pF/50V (VIP-5000HC MKII/VIP-5000A MKII/VCP-500D/VCP-500/VIP-8000K MKII model only)	3S41120T

Ref. No.	Description	Part No.
C 3046	CERAMIC CAP. SL J 33pF/50V (VIP-5000HC MKII/VIP-5000A MKII/VCP-500D/VCP-500/VIP-8000K MKII model only)	3S41330T
C 3046	CERAMIC CAP. B J 82pF/50V (VIP-5000LR model only)	3B41820T
C 3047	CERAMIC CAP. SL J 22pF/50V (VIP-5000HC MKII/VIP-5000A MKII/VCP-500D/VCP-500/VIP-8000K MKII model only)	3S41220T
C 3047	CERAMIC CAP. SL J 47pF/50V (VIP-5000LR model only)	3S41470T
C 3048	CERAMIC CAP. SL J 22pF/50V (VIP-5000LR model only)	3S41220T
C 3049	CERAMIC CAP. SL J 33pF/50V	3S41330T
C 3050	CERAMIC CAP. B J 180pF/50V	3B41181T
C 3051	CERAMIC CAP. SL J 33pF/50V	3S41330T
C 3052	CERAMIC CAP. SL J 47pF/50V (VIP-5000LR model only)	3S41470T
C 3053	CERAMIC CAP. B J 220pF/50V	3B41221T
C 3054	CERAMIC CAP. SL J 56pF/50V	3S41560T
C 3055	CERAMIC CAP. B J 220pF/50V	3B41221T
C 3056	SEMICONDUCTOR CAP. SR K 0.022μF/25V	12Y2223S
C 3057	CERAMIC CAP. SL J 33pF/50V	3S41330T
C 3058	CERAMIC CAP. SL J 27pF/50V	3S41270T
C 3059	CERAMIC CAP. SL J 39pF/50V	3S41390T
C 3060	CERAMIC CAP. SL J 39pF/50V	3S41390T
C 3061	CERAMIC CAP. SL J 56pF/50V	3S41560T
C 3062	CERAMIC CAP. F Z 0.1μF/50V	3F40104T
C 3063	CERAMIC CAP. SL J 27pF/50V (VIP-8000K MKII model only)	3S41270T
C 3064	CERAMIC CAP. SL J 56pF/50V (VIP-8000K MKII model only)	3S41560T
C 3065	CERAMIC CAP. Y M 0.01μF/16V (VIP-8000K MKII model only)	3Y4D103T
C 3066	CERAMIC CAP. Y M 0.01μF/16V (VIP-8000K MKII model only)	3Y4D103T
C 3067	CERAMIC CAP. F Z 0.022μF/25V (VIP-8000K MKII model only)	122Z122T
C 3068	CERAMIC CAP. Y M 0.01μF/16V (VIP-8000K MKII model only)	3Y4D103T
C 3069	CERAMIC CAP. SL J 22pF/50V (VIP-8000K MKII model only)	3S41220T
C 3070	CERAMIC CAP. Y M 0.01μF/16V (VIP-8000K MKII model only)	3Y4D103T
C 3071	CERAMIC CAP. SL D 6pF/50V (VIP-8000K MKII model only)	1270609S
C 3072	CERAMIC CAP. Y M 0.01μF/16V (VIP-5000LR model only)	3Y4D103T
C 3073	ELECTROLYTIC CAP. 0.1μF/50V M H7 (VIP-5000LR model only)	526W104S
C 3074	CERAMIC CAP. X K 0.0022μF/16V (VIP-5000LR model only)	3X4C222T
C 4001	CERAMIC CAP. B J 820pF/50V (VIP-5000LR model only)	3B41821T
C 4002	CERAMIC CAP. B J 0.001μF/50V (VIP-5000LR model only)	3B41102T
C 4003	CERAMIC CAP. Y M 0.01μF/16V or	3Y4D103T
	CERAMIC CAP. F Z 0.01μF/16V	1220842T
C 4004	ELECTROLYTIC CAP. 10μF/16V M H7	526T106S
C 4005	ELECTROLYTIC CAP. 10μF/16V M H7 (VIP5000HC MKII/VIP-5000A MKII/VCP-500D/VCP-500/VIP-8000K MKII model only)	526T106S

Main CBA Bottom View

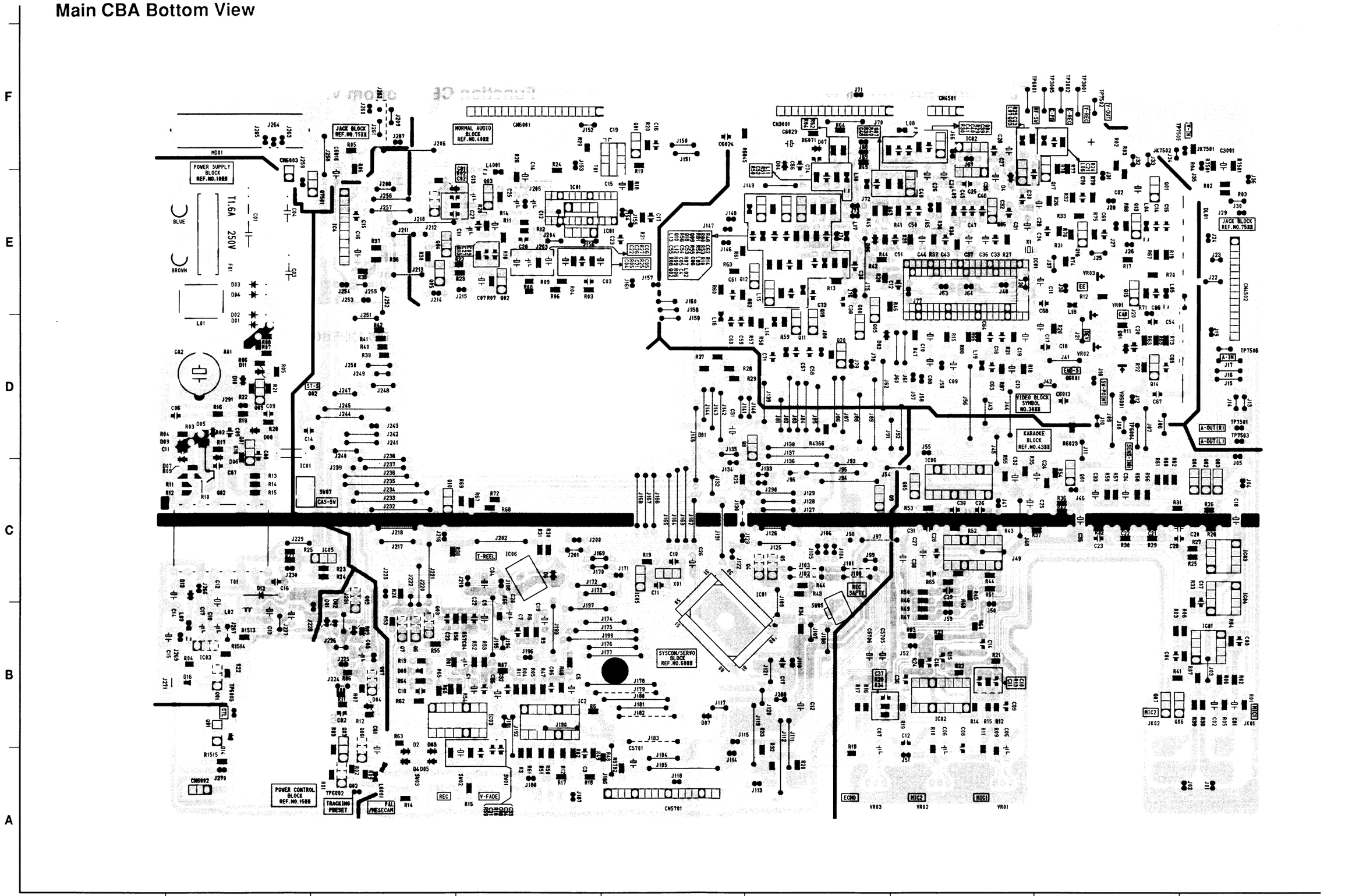

BV2000F01001-A

Function CBA Top View

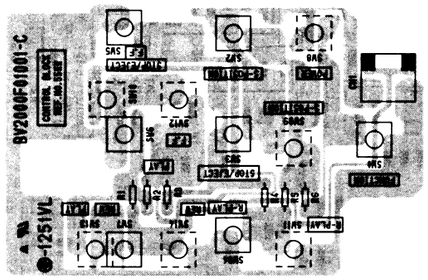

Function CBA Bottom View

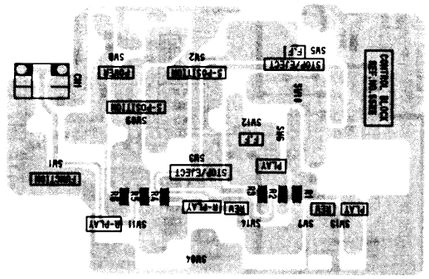

BV2000F01001-C

LED CBA Top View

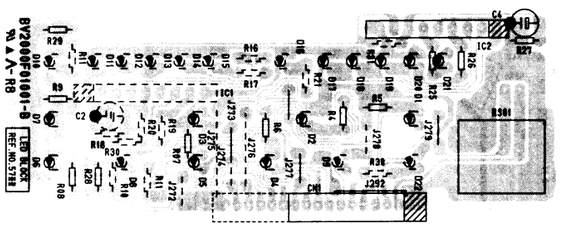

LED CBA Bottom View

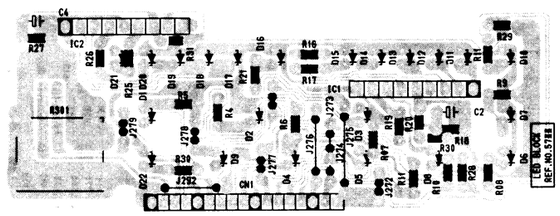

BV2000F01001-B

Ref. No.	Description	Part No.
C 4005	ELECTROLYTIC CAP. 4.7μF/25V M H7 (VIP-5000LR model only)	526U475S
C 4006	ELECTROLYTIC CAP. 0.1μF/50V M H7	526W104S
C 4007	ELECTROLYTIC CAP. 4.7μF/25V M H7 (VIP-5000LR model only)	526U475S
C 4009	CERAMIC CAP. X K 0.0056μF/16V (VIP5000HC MKII/VIP-5000A MKII/VCP-500D/VCP-500/VIP-8000K MKII model only)	3X4C562T
C 4009	CERAMIC CAP. X K 0.0047μF/16V (VIP-5000LR model only)	3X4C472T
C 4010	ELECTROLYTIC CAP. 4.7μF/25V M H7	526U475S
C 4011	CERAMIC CAP. F Z 0.1μF/50V (VIP-5000LR model only)	3F40104T
C 4012	ELECTROLYTIC CAP. 0.1μF/50V M H7 (VIP-5000LR model only)	526W104S
C 4013	ELECTROLYTIC CAP. 1μF/50V M H7 (VIP-5000LR model only)	526W105S
C 4014	ELECTROLYTIC CAP. 47μF/6.3V M H7 (VIP5000HC MKII/VIP-5000A MKII/VCP-500D/VCP-500/VIP-8000K MKII model only)	526R476S
C 4014	ELECTROLYTIC CAP. 10μF/16V M H7 (VIP-5000LR model only)	526T106S
C 4015	ELECTROLYTIC CAP. 47μF/16V M H7 (VIP-5000LR model only)	526T476S
C 4016	SEMICONDUCTOR CAP. Y K 0.01μF/25V (VIP-5000LR model only)	12Y2103S
C 4017	SEMICONDUCTOR CAP. Y K 0.01μF/25V (VIP-5000LR model only)	12Y2103S
C 4019	*MYLAR CAP. 0.047μF/100V J (VIP-5000LR model only)	1255473S
C 4021	CERAMIC CAP. B J 100pF/50V (VIP5000HC MKII/VIP-5000A MKII/VCP-500D/VCP-500/VIP-8000K MKII model only)	3B41101T
C 4023	CERAMIC CAP. X K 0.0018μF/16V (VIP5000HC MKII/VIP-5000A MKII/VCP-500D/VCP-500/VIP-8000K MKII model only)	3X4C182T
C 4026	ELECTROLYTIC CAP. 0.1μF/50V M H7 (VIP-5000LR model only)	526W104S
C 4027	CERAMIC CAP. SL J 47pF/50V (VIP5000HC MKII/VIP-5000A MKII/VCP-500D/VCP-500/VIP-8000K MKII model only)	3S41470T
C 4301	ELECTROLYTIC CAP. 2.2μF/50V M (VIP-8000K MKII model only)	126F225S
C 4302	ELECTROLYTIC CAP. 2.2μF/50V M (VIP-8000K MKII model only)	126F225S
C 4303	CERAMIC CAP. SL J 220pF/50V (VIP-8000K MKII model only)	1270221S
C 4304	CERAMIC CAP. SL J 220pF/50V (VIP-8000K MKII model only)	1270221S
C 4305	ELECTROLYTIC CAP. 4.7μF/25V M (VIP-8000K MKII model only)	126D475S
C 4306	ELECTROLYTIC CAP. 4.7μF/25V M (VIP-8000K MKII model only)	126D475S
C 4307	ELECTROLYTIC CAP. 4.7μF/25V M (VIP-8000K MKII model only)	126D475S
C 4308	ELECTROLYTIC CAP. 0.1μF/50V M (VIP-8000K MKII model only)	126F104S
C 4309	CERAMIC CAP. B K 0.0022μF/50V (VIP-8000K MKII model only)	12B3222S
C 4310	CERAMIC CAP. B K 0.0047μF/50V (VIP-8000K MKII model only)	12B3472S

Ref. No.	Description	Part No.
C 4311	CERAMIC CAP. SL J 220pF/50V (VIP-8000K MKII model only)	1270221S
C 4312	ELECTROLYTIC CAP. 0.1μF/50V M (VIP-8000K MKII model only)	126F104S
C 4314	ELECTROLYTIC CAP. 0.1μF/50V M (VIP-8000K MKII model only)	126F104S
C 4316	CERAMIC CAP. SL J 100pF/50V (VIP-8000K MKII model only)	1270101S
C 4317	CERAMIC CAP. SL J 180pF/50V (VIP-8000K MKII model only)	1270181S
C 4318	ELECTROLYTIC CAP. 3.3μF/50V M (VIP-8000K MKII model only)	126F335S
C 4319	CERAMIC CAP. B K 0.0047μF/50V (VIP-8000K MKII model only)	12B3472S
C 4320	MYLAR CAP. 0.0018μF/50V J (VIP-8000K MKII model only)	2254182S
C 4321	MYLAR CAP. 0.0015μF/50V J (VIP-8000K MKII model only)	2254152S
C 4322	MYLAR CAP. 0.0015μF/50V J (VIP-8000K MKII model only)	2254152S
C 4323	CERAMIC CAP. B K 0.0047μF/50V (VIP-8000K MKII model only)	12B3472S
C 4324	ELECTROLYTIC CAP. 47μF/16V M (VIP-8000K MKII model only)	126C476S
C 4333	ELECTROLYTIC CAP. 10μF/16V M (VIP-8000K MKII model only)	126C106S
C 4335	ELECTROLYTIC CAP. 10μF/16V M (VIP-8000K MKII model only)	126C106S
C 4336	ELECTROLYTIC CAP. 0.1μF/50V M (VIP-8000K MKII model only)	126F104S
C 4337	CERAMIC CAP. SL J 150pF/50V (VIP-8000K MKII model only)	1270151S
C 4338	ELECTROLYTIC CAP. 4.7μF/25V M (VIP-8000K MKII model only)	126D475S
C 4339	ELECTROLYTIC CAP. 33μF/6.3V M (VIP-8000K MKII model only)	126A336S
C 6002	CERAMIC CAP. F Z 0.047μF/50V	3F40473T
C 6003	CERAMIC CAP. Y M 0.01μF/16V or	3Y4D103T
	CERAMIC CAP. F Z 0.01μF/16V	1220842T
C 6004	ELECTROLYTIC CAP. 220μF/6.3V M H7	526R227S
C 6005	ELECTROLYTIC CAP. 22μF/16V M H7	526T226S
C 6006	CERAMIC CAP. Y M 0.01μF/16V or	3Y4D103T
	CERAMIC CAP. F Z 0.01μF/16V	1220842T
C 6007	CERAMIC CAP. B J 0.0018μF/16V	3X4C182T
C 6008	CERAMIC CAP. B J 0.001μF/50V	3B41102T
C 6009	ELECTROLYTIC CAP. 2.2μF/50V M H7	526W225S
C 6010	CERAMIC CAP. SL J 15pF/50V	3S41150T
C 6011	CERAMIC CAP. SL J 10pF/50V	3S41100T
C 6012	ELECTROLYTIC CAP. 330μF/6.3V M	126A337S
C 6013	CERAMIC CAP. B J 0.001μF/50V	3B41102T
C 6014	CERAMIC CAP. B J 0.001μF/50V	3B41102T
C 6015	CERAMIC CAP. F Z 0.1μF/50V	3F40104T
C 6016	ELECTROLYTIC CAP. 10μF/16V M H7	526T106S
C 6017	CERAMIC CAP. F Z 0.1μF/50V	3F40104T
C 6018	CERAMIC CAP. F Z 0.1μF/50V	3F40104T
C 6019	ELECTROLYTIC CAP. 10μF/16V M H7	526T106S
C 6020	ELECTROLYTIC CAP. 47μF/6.3V M H7 (VIP-5000LR model only)	526R476S
C 6021	ELECTROLYTIC CAP. 10μF/16V M H7	526T106S
C 6022	CERAMIC CAP. F Z 0.022μF/25V or	122Z122T

* Mylar is a registered trademark of E. I. Du Pont de Nemours and Company.

Ref. No.	Description	Part No.
	CERAMIC CAP. F Z 0.022μF/25V	1220843T
C 6026	ELECTROLYTIC CAP. 2.2μF/50V M H7	526W225S
C 6029	CERAMIC CAP. F Z 0.1μF/50V	3F40104T
C 6032	CERAMIC CAP. B J 0.001μF/50V	3B41102T
C 6033	CERAMIC CAP. B J 0.001μF/50V	3B41102T
C 6034	CERAMIC CAP. B J 0.001μF/50V	3B41102T
C 6035	ELECTROLYTIC CAP. 100μF/6.3V M H7	526R107S
C 6036	CERAMIC CAP. B J 0.001μF/50V	3B11102
C 6037	ELECTROLYTIC CAP. 47μF/6.3V M H7	526R476
	CONNECTORS	
CN3001	STRAIGHT PIN CONNECTOR, 15P	1770635
CN6001	STRAIGHT PIN CONNECTOR, 20P	1770640
CN6002	STRAIGHT PIN CONNECTOR, 3P	1770623
CN6003	STRAIGHT PIN CONNECTOR, 2P (VIP-5000LR model only)	1740764
	DIODES	
D 1001	RECTIFIER DIODE 1A5 or	NDQZ000001A5
	RECTIFIER DIODE 1N4005	ND8Z001N4005
D 1002	RECTIFIER DIODE 1A5 or	NDQZ000001A5
	RECTIFIER DIODE 1N4005	ND8Z001N4005
D 1003	RECTIFIER DIODE 1A5 or	NDQZ000001A5
	RECTIFIER DIODE 1N4005	ND8Z001N4005
D 1004	RECTIFIER DIODE 1A5 or	NDQZ000001A5
	RECTIFIER DIODE 1N4005	ND8Z001N4005
D 1005	RECTIFIER DIODE EG01C or	QDPZ000EG01C
	RECTIFIER DIODE ERA22-10Y2(TYPE I) or	QDQZ0ERA2210
	FAST RECOVERY DIODE AP01C or	AAP01C000000
	FAST RECOVERY DIODE RGP10K	ND8Z00RGP10K
D 1006	SWITCHING DIODE GMB01-BT or	GMB01BT
	SWITCHING DIODE 1N4148M or	QDTZ01N4148M
	SWITCHING DIODE 1N4148M	NDTZ01N4148M
D 1007	SWITCHING DIODE GMB01-BT or	GMB01BT
	SWITCHING DIODE 1N4148M or	QDTZ01N4148M
	SWITCHING DIODE 1N4148M (VIP-5000HC MKII/VIP-5000A MKII/VIP-5000LR/VIP-8000K MKII model only)	NDTZ01N4148M
D 1008	SWITCHING DIODE GMB01-BT or	GMB01BT
	SWITCHING DIODE 1N4148M or	QDTZ01N4148M
	SWITCHING DIODE 1N4148M	NDTZ01N4148M
D 1009	SWITCHING DIODE MA188 (VCP-500D/VCP-500 model only)	QDTZ000MA188
D 1010	SWITCHING DIODE GMB01-BT or	GMB01BT
	SWITCHING DIODE 1N4148M or	QDTZ01N4148M
	SWITCHING DIODE 1N4148M (VCP-500D/VCP-500 model only)	NDTZ01N4148M
D 1011	ZENER DIODE UZ-7.5BSA (VCP-500D/VCP-500 model only)	QDTA0UZ7R5BS
D 1012	RECTIFIER DIODE RU2YX LF-C4 or	QDQZ000RU2YX
	FAST RECOVERY DIODE ERB32-01L3 or	QDQZ0ERB3201
	RECTIFIER DIODE RGP15B	ND8Z00RGP15B
D 1013	SCHOTTKY BARRIER DIODE AK04 or	QDQZ0000AK04
	SCHOTTKY BARRIER DIODE ERA81-004 or	QDQZERA81004
	SCHOTTKY BARRIER DIODE 11EQS04	QD4Z011EQS04
D 1501	ZENER DIODE UZ-5.1BSA (VIP-5000LR/VIP-8000K MKII model only)	QDTA0UZ5R1BS
D 3001	SWITCHING DIODE GMB01-BT or	GMB01BT
	SWITCHING DIODE 1N4148M or	QDTZ01N4148M
	SWITCHING DIODE 1N4148M	NDTZ01N4148M
D 3003	SWITCHING DIODE GMB01-BT or	GMB01BT
	SWITCHING DIODE 1N4148M or	QDTZ01N4148M

Ref. No.	Description	Part No.
	SWITCHING DIODE 1N4148M	NDTZ01N4148M
D 3004	SWITCHING DIODE GMB01-BT or	GMB01BT
	SWITCHING DIODE 1N4148M or	QDTZ01N4148M
	SWITCHING DIODE 1N4148M (VIP-5000LR model only)	NDTZ01N4148M
D 3005	SWITCHING DIODE GMB01-BT or	GMB01BT
	SWITCHIMG DIODE 1N4148M or	QDTZ01N4148M
	SWITCHING DIODE 1N4148M (VIP-8000K MKII model only)	NDTZ01N4148M
D 3006	SWITCHING DIODE GMB01-BT or	GMB01BT
	SWITCHIMG DIODE 1N4148M or	QDTZ01N4148M
	SWITCHING DIODE 1N4148M (VIP-8000K MKII model only)	NDTZ01N4148M
D 6001	LED SID1K10CXM or	QP4ZD1K10CXM
	LED LN66A or	QP7Z000LN66A
	LED IR940 IR4 or	NP43000IR940
	LED IR940 IR5	NP44000IR940
D 6002	SWITCHING DIODE GMB01-BT or	GMB01BT
	SWITCHING DIODE 1N4148M or	QDTZ01N4148M
	SWITCHING DIODE 1N4148M	NDTZ01N4148M
D 6003	SWITCHING DIODE GMB01-BT or	GMB01BT
	SWITCHING DIODE 1N4148M or	QDTZ01N4148M
	SWITCHING DIODE 1N4148M	NDTZ01N4148M
D 6004	SWITCHING DIODE GMB01-BT or	GMB01BT
	SWITCHING DIODE 1N4148M or	QDTZ01N4148M
	SWITCHING DIODE 1N4148M	NDTZ01N4148M
D 6005	SWITCHING DIODE GMB01-BT or	GMB01BT
	SWITCHING DIODE 1N4148M or	QDTZ01N4148M
	SWITCHING DIODE 1N4148M	NDTZ01N4148M
D 6006	SWITCHING DIODE GMB01-BT or	GMB01BT
	SWITCHING DIODE 1N4148M or	QDTZ01N4148M
	SWITCHING DIODE 1N4148M	NDTZ01N4148M
	ICS	
IC1001 ⚠	PHOTO COUPLER PC120	QP5Z000PC120
IC1002	IC AN1431T-(NSC) or	QSBLA0ZMS001
	IC L5431 or	QSZLA0ZSY004
	IC KIA431 or	NSZLA0ZJY001
	IC KA431Z	NSZLA0ZSM001
IC3001	IC, VIDEO LA7390LL (VIP-5000HC MKII/VIP-5000A MKII/VCP-500D/VCP-500 model only)	QSBLA0SSY038
IC3001	IC, VIDEO LA7347 (VIP-5000LR model only)	QSZLA0SSY006
IC3001	IC, VIDEO LA7480L (VIP-8000K MKII model only)	QSBLA0SSY040
IC3002	IC:CCD LC89925	QSMLA0SSY004
IC4001	IC, OP.AMP NJM4558D-D (VIP-5000HC MKII/VIP-5000A MKII/VCP-500D/VCP-500 model only)	QSMLA0SJR001
IC4001	IC, AUDIO LA7286 (VIP-5000LR/VIP-8000K MKII model only)	QSZLA0SSY007
IC4301	IC, OP.AMP NJM4558D-D (VIP-8000K MKII model only)	QSMLA0SJR001
IC4302	IC:OP-AMP. KIA324P DIP-14 or	NSBLA0SJY002
	IC, OP-AMP. KA324 (VIP-8000K MKII model only)	NSBLA0SSM001
IC4303	IC, ECHO MN3207 (VIP-8000K MKII model only)	QSMDA0ZMS002
IC4304	IC, DRIVER MN3102 (VIP-8000K MKII model only)	QSMDA0ZMS003
IC6001	MICRO CONTROLER 8BIT SY/CXP80712 or	QSMQA0RSN022

Ref. No.	Description	Part No.
	MICRO CONTROLER 8BIT SY/CXP80712-503Q (VIP-5000HC MKII/VIP-5000A MKII/VCP-500D/VCP-500/VIP-8000K MKII model only)	QSMQB0RSN022
IC6001	MICRO CONTROLER 8BIT SY/CXP80720-502Q or	QSMQA0RSN023
	MICRO CONTROLER 8BIT SY/CXP80720-504Q (VIP-5000LR model only)	QSMQB0RSN023
IC6002	IC, COMPARATOR KIA339P or	NSBLA0SJY019
	IC, COMPARATOR NJM2901N	QSBLA0SJR040
	IC, COMPARATOR KA339	NSBLA0SSM002
IC6003	IC:OP-AMP. KIA324P DIP-14 or	NSBLA0SJY002
	IC, OP-AMP. KA324	NSBLA0SSM001
IC6004	IC TA7291S	14LW342
IC6005	IC:RESET PST-529D-2 or	14DM763Z
	IC, RESET 4.2V KIA7042P(T0-92)	NSBLA0TJY016
REEL SENSOR EXCLUSIVE(A)		
IC6006	REEL SENSOR GP1S38	PCZLAZZSH001
REEL SENSOR EXCLUSIVE(B)		
IC6006	REEL SENSOR SG-211L	PCZLAZZKK003
	COILS	
L 1001 ⚠	LINE FILTER 33MH LF-4D-333 or	LLBG00ZKQ004
	LINE FILTER, 33MH ELF-18D290HN	1813569
L 1002	INDUCTOR 22μH-K	LLARKLUTU220
L 1003	INDUCTOR 22μH-K	LLARKLUTU220
L 1004	BEAD CORE HF70BB4.1X3X2 or	XL03003TE001
	BEAD CORE C0-022Z (VIP-5000HC MKII/VIP-5000A MKII/ VIP-5000LR/VIP-8000K MKII model only)	XL03004JT001
L 1004	BEAD CORE C0-022Z (VCP-500D/VCP-500 model only)	XL03004JT001
L 3002	INDUCTOR 180μH-K-26T or	LLAXKDTKA181
	INDUCTOR 180μH-K-26T (VIP-5000LR model only)	LLAXKATTU181
L 3003	INDUCTOR 82μH-K-26T or	LLAXKDTKA820
	INDUCTOR 82μH-K-26T (VIP-5000LR model only)	LLAXKATTU820
L 3004	INDUCTOR 4.7μH-K-26T or	LLAXKDTKA4R7
	INDUCTOR 4.7μH-K-26T (VIP-5000HC MKII/VIP-5000A MKII/VCP-500D/VCP-500/VIP-5000LR model only)	LLAXKATTU4R7
L 3004	INDUCTOR 2.2μH-K-26T or	LLAXKDTKA2R2
	INDUCTOR 2.2μH-K-26T (VIP-8000K MKII model only)	LLAXKATTU2R2
L 3005	INDUCTOR 15μH-K-26T or	LLAXKDTKA150
	INDUCTOR 15μH-K-26T	LLAXKATTU150
L 3006	INDUCTOR 10μH-K-26T or	LLAXKDTKA100
	INDUCTOR 10μH-K-26T	LLAXKATTU100
L 3007	INDUCTOR 100μH-K-26T or	LLAXKDTKA101
	INDUCTOR 100μH-K-26T	LLAXKATTU101
L 3008	INDUCTOR 68μH-K-26T or	LLAXKDTKA680
	INDUCTOR 68μH-K-26T	LLAXKATTU680
L 3009	INDUCTOR 33μH-K-26T or	LLAXKDTKA330
	INDUCTOR 33μH-K-26T (VIP-5000HC MKII/VIP-5000A MKII/VCP-500D/VCP-500/VIP-8000K MKII model only)	LLAXKATTU330
L 3009	INDUCTOR 27μH-K-26T or	LLAXKDTKA270
	INDUCTOR 27μH-K-26T (VIP-5000LR model only)	LLAXKATTU270
L 3010	INDUCTOR 68μH-K-26T or	LLAXKDTKA680

Ref. No.	Description	Part No.
	INDUCTOR 68μH-K-26T (VIP-5000LR model only)	LLAXKATTU680
L 3011	INDUCTOR 56μH-K-26T or	LLAXKDTKA560
	INDUCTOR 56μH-K-26T (VIP-5000LR model only)	LLAXKATTU560
L 3012	INDUCTOR 330μH-K-26T	LLAXKDTKA331
L 3013	INDUCTOR 330μH-K-26T	LLAXKDTKA331
L 3014	INDUCTOR 10μH-K-26T or	LLAXKDTKA100
	INDUCTOR 10μH-K-26T	LLAXKATTU100
L 3015	INDUCTOR 27μH-K-26T or	LLAXKDTKA270
	INDUCTOR 27μH-K-26T	LLAXKATTU270
L 3016	INDUCTOR 39μH-K-26T or	LLAXKDTKA390
	INDUCTOR 39μH-K-26T	LLAXKATTU390
L 3017	INDUCTOR 330μH-K-26T	LLAXKDTKA331
L 3018	INDUCTOR 22μH-K-5FT	LLARKBSTU220
L 3019	INDUCTOR 33μH-K-26T or	LLAXKDTKA330
	INDUCTOR 33μH-K-26T (VIP-8000K MKII model only)	LLAXKATTU330
L 3020	INDUCTOR 15μH-K-26T or	LLAXKDTKA150
	INDUCTOR 15μH-K-26T (VIP-8000K MKII model only)	LLAXKATTU150
L 6001	INDUCTOR 10μH-K-26T or	LLAXKDTKA100
	INDUCTOR 10μH-K-26T	LLAXKATTU100
L 6002	INDUCTOR 10μH-K-5FT	LLARKBSTU100
T 4001	COIL, OSC 7QM3 C-14284A or	LFA07V0VD001
	COIL, OSC K7-J1 R12 N657X (VIP-5000LR model only)	LFA07V0MM038
	TRANSISTORS	
Q 1001 ⚠	TRANSISTOR 2SC4204 or	QQSZ02SC4204
	TRANSISTOR 2SC3246(J) or	QQSJ02SC3246
	TRANSISTOR 2SC3246(K)	QQSK02SC3246
Q 1002 ⚠	TRANSISTOR 2SC4517 or	QQPZ02SC4517
	TRANSISTOR 2SC3866	QQPZ02SC3866
Q 1003	TRANSISTOR 2SC3331 (T) or	QSC3331TNPAA
	TRANSISTOR 2SC3331(U) (VCP-500D/VCP-500 model only)	QSC3331UNPAA
Q 1501	TRANSISTOR 2SA1318(T)-AA-NP or	QSA1318TAANP
	TRANSISTOR 2SA1318(U)-AA-NP (VIP-5000HC MKII/VIP-5000A MKII/VCP-500D/VCP-500 model only)	QSA1318UAANP
Q 1501	TRANSISTOR 2SA1286 (G) (VIP-5000LR/VIP-8000K MKII model only)	QQSG02SA1286
Q 1503	RES. BUILT-IN TRANSISTOR 2SC3400 or	C3400Z
	RES. BUILT-IN TRANSISTOR KRC103M or	NQSZ0KRC103M
	RES. BUILT-IN TRANSISTOR KSR1203 (VIP-5000HC MKII/VIP-5000A MKII/VCP-500D/VCP-500 model only)	NQSZ0KSR1203
Q 1503	TRANSISTOR 2SC536SP (E) or	C536SEZ
	TRANSISTOR 2SC536SP (F) or	C536SFZ
	TRANSISTOR 2SC3199 (GR) or	NQS402SC3199
	TRANSISTOR KSC2785 (Y) or	NQSY0KSC2785
	TRANSISTOR KSC2785 (G) (VIP-5000LR/VIP-8000K MKII model only)	NQSG0KSC2785
Q 1506	RES. BUILT-IN TRANSISTOR 2SC3400 or	C3400Z
	RES. BUILT-IN TRANSISTOR KRC103M or	NQSZ0KRC103M
	RES. BUILT-IN TRANSISTOR KSR1203 (VIP-5000LR/VIP-8000K MKII model only)	NQSZ0KSR1203
Q 3001	TRANSISTOR 2SA1317(S) or	A1317SZ
	TRANSISTOR 2SA1317(T) or	A1317TZ
	TRANSISTOR KTA1266 (GR)	NQS40KTA1266
Q 3002	TRANSISTOR 2SC536SP (E) or	C536SEZ

Ref. No.	Description	Part No.
	TRANSISTOR 2SC536SP (F) or	C536SFZ
	TRANSISTOR 2SC3199 (GR) or	NQS402SC3199
	TRANSISTOR KSC2785 (Y) or	NQSY0KSC2785
	TRANSISTOR KSC2785 (G) (VIP-5000LR model only)	NQSG0KSC2785
Q 3003	TRANSISTOR 2SC536SP(E) or	C536SEZ
	TRANSISTOR 2SC536SP(F) or	C536SFZ
	TRANSISTOR 2SC3199(GR) or	NQS402SC3199
	TRANSISTOR KSC2785(Y) or	NQSY0KSC2785
	TRANSISTOR KSC2785(G) (VIP-5000HC MKII/VIP-5000A MKII/VCP-500D/VCP-500/VIP-5000LR model only)	NQSG0KSC2785
Q 3004	TRANSISTOR 2SC536SP(E) or	C536SEZ
	TRANSISTOR 2SC536SP(F) or	C536SFZ
	TRANSISTOR 2SC3199(GR) or	NQS402SC3199
	TRANSISTOR KSC2785(Y) or	NQSY0KSC2785
	TRANSISTOR KSC2785(G)	NQSG0KSC2785
Q 3005	RES. BUILT-IN TRANSISTOR 2SC3400 or	C3400Z
	RES. BUILT-IN TRANSISTOR KRC103M or	NQSZ0KRC103M
	RES. BUILT-IN TRANSISTOR KSR1203 (VIP-5000LR model only)	NQSZ0KSR1203
Q 3006	TRANSISTOR 2SA608SP(E) or	A608SEZ
	TRANSISTOR 2SA608SP(F) or	A608SFZ
	TRANSISTOR 2SA1267(GR) or	NQS402SA1267
	TRANSISTOR KSA1175(Y) or	NQSY0KSA1175
	TRANSISTOR KSA1175(G)	NQSG0KSA1175
Q 3007	TRANSISTOR 2SA608SP(E) or	A608SEZ
	TRANSISTOR 2SA608SP(F) or	A608SFZ
	TRANSISTOR 2SA1267(GR) or	NQS402SA1267
	TRANSISTOR KSA1175(Y) or	NQSY0KSA1175
	TRANSISTOR KSA1175(G) (VIP-5000LR model only)	NQSG0KSA1175
Q 3008	RES. BUILT-IN TRANSISTOR KRA109M or	NQSZ0KRA109M
	RES. BUILT-IN TRANSISTOR DTA144WS or	A144WSZ
	RES. BUILT-IN TRANSISTOR KSR2208	NQSZ0KSR2208
Q 3009	TRANSISTOR 2SA608SP(E) or	A608SEZ
	TRANSISTOR 2SA608SP(F) or	A608SFZ
	TRANSISTOR 2SA1267(GR) or	NQS402SA1267
	TRANSISTOR KSA1175(Y) or	NQSY0KSA1175
	TRANSISTOR KSA1175(G)	NQSG0KSA1175
Q 3010	RES. BUILT-IN TRANSISTOR 2SC3400 or	C3400Z
	RES. BUILT-IN TRANSISTOR KRC103M or	NQSZ0KRC103M
	RES. BUILT-IN TRANSISTOR KSR1203	NQSZ0KSR1203
Q 3011	TRANSISTOR 2SC2839(E) or	C2839EZ
	TRANSISTOR 2SC2839(F) or	C2839FZ
	TRANSISTOR 2SC3193(Y)	NQSY02SC3193
Q 3012	TRANSISTOR 2SC2839(E) or	C2839EZ
	TRANSISTOR 2SC2839(F) or	C2839FZ
	TRANSISTOR 2SC3193(Y)	NQSY02SC3193
Q 3013	TRANSISTOR 2SC536SP(E) or	C536SEZ
	TRANSISTOR 2SC536SP(F) or	C536SFZ
	TRANSISTOR 2SC3199(GR) or	NQS402SC3199
	TRANSISTOR KSC2785(Y) or	NQSY0KSC2785
	TRANSISTOR KSC2785(G) or (VIP-8000K MKII model only)	NQSG0KSC2785
Q 3014	TRANSISTOR 2SC2839(E) or	C2839EZ
	TRANSISTOR 2SC2839(F) or	C2839FZ
	TRANSISTOR 2SC3193(Y) (VIP-8000K MKII model only)	NQSY02SC3193
Q 3015	TRANSISTOR 2SC2839(E) or	C2839EZ

Ref. No.	Description	Part No.
	TRANSISTOR 2SC2839(F) or	C2839FZ
	TRANSISTOR 2SC3193(Y) (VIP-8000K MKII model only)	NQSY02SC3193
Q 3016	TRANSISTOR 2SC2839(E) or	C2839EZ
	TRANSISTOR 2SC2839(F) or	C2839FZ
	TRANSISTOR 2SC3193(Y) (VIP-8000K MKII model only)	NQSY02SC3193
Q 3017	TRANSISTOR 2SC2839(E) or	C2839EZ
	TRANSISTOR 2SC2839(F) or	C2839FZ
	TRANSISTOR 2SC3193(Y) (VIP-8000K MKII model only)	NQSY02SC3193
Q 3018	RES. BUILT-IN TRANSISTOR 2SC3400 or	C3400Z
	RES. BUILT-IN TRANSISTOR KRC103M or	NQSZ0KRC103M
	RES. BUILT-IN TRANSISTOR KSR1203 (VIP-8000K MKII model only)	NQSZ0KSR1203
Q 3019	RES. BUILT-IN TRANSISTOR 2SC3400 or	C3400Z
	RES. BUILT-IN TRANSISTOR KRC103M or	NQSZ0KRC103M
	RES. BUILT-IN TRANSISTOR KSR1203 (VIP-8000K MKII model only)	NQSZ0KSR1203
Q 4001	TRANSISTOR 2SC3331 (T) or	QSC3331TNPAA
	TRANSISTOR 2SC3331 (U) (VIP-5000LR model only)	QSC3331UNPAA
Q 4004	RES. BUILT-IN TRANSISTOR KRA109M or	NQSZ0KRA109M
	RES. BUILT-IN TRANSISTOR DTA144WS or	A144WSZ
	RES. BUILT-IN TRANSISTOR KSR2208	NQSZ0KSR2208
Q 4005	TRANSISTOR 2SD545(F) or	QQSF2SD545NP
	TRANSISTOR 2SD545(G) or	QQSG2SD545NP
	TRANSISTOR 2SD1012(F) or	D1012FZ
	TRANSISTOR 2SD1012(G) (VIP-5000HC MKII/VIP-5000A MKII/VCP-500D/VCP-500/VIP-8000K MKII model only)	D1012GZ
Q 4005	TRANSISTOR 2SC536SP (E) or	C536SEZ
	TRANSISTOR 2SC536SP (F) or	C536SFZ
	TRANSISTOR 2SC3199 (GR) or	NQS402SC3199
	TRANSISTOR KSC2785 (Y) or	NQSY0KSC2785
	TRANSISTOR KSC2785 (G) (VIP-5000LR model only)	NQSG0KSC2785
Q 4301	RES. BUILT-IN TRANSISTOR KRA109M or	NQSZ0KRA109M
	RES. BUILT-IN TRANSISTOR DTA144WS or	A144WSZ
	RES. BUILT-IN TRANSISTOR KSR2208 (VIP-8000K MKII model only)	NQSZ0KSR2208
Q 4302	RES. BUILT-IN TRANSISTOR KRA109M or	NQSZ0KRA109M
	RES. BUILT-IN TRANSISTOR DTA144WS or	A144WSZ
	RES. BUILT-IN TRANSISTOR KSR2208 (VIP-8000K MKII model only)	NQSZ0KSR2208
Q 6001	PHOTO TRANSISTOR PT380FAB	QP7ZPT380FAB
Q 6002	PHOTO TRANSISTOR PT380FAB	QP7ZPT380FAB
Q 6003	RES. BUILT-IN TRANSISTOR 2SC3400 or	C3400Z
	RES. BUILT-IN TRANSISTOR KRC103M or	NQSZ0KRC103M
	RES. BUILT-IN TRANSISTOR KSR1203 (VIP-5000LR model only)	NQSZ0KSR1203
Q 6009	RES. BUILT-IN TRANSISTOR 2SC3400 or	C3400Z
	RES. BUILT-IN TRANSISTOR KRC103M or	NQSZ0KRC103M
	RES. BUILT-IN TRANSISTOR KSR1203 (VIP-5000LR model only)	NQSZ0KSR1203
Q 6010	TRANSISTOR 2SC536SP(E) or	C536SEZ
	TRANSISTOR 2SC536SP(F) or	C536SFZ
	TRANSISTOR 2SC3199(GR) or	NQS402SC3199
	TRANSISTOR KSC2785(Y) or	NQSY0KSC2785
	TRANSISTOR KSC2785(G)	NQSG0KSC2785
Q 7501	TRANSISTOR 2SA608SP(E) or	A608SEZ

Ref. No.	Description	Part No.
	TRANSISTOR 2SA608SP(F) (VCP-500 model only)	A608SFZ
Q 7501	TRANSISTOR 2SA608SP(E) (VIP-5000A MKII model only)	A608SEZ
	RESISTORS	
R 1001	FIXED METAL OXIDE FILM RES. 2W J 4.7 Ω or	RN024R7KE005
R 1002	FIXED METAL OXIDE FILM RES. 2W J 82K Ω or	1330513
	FIXED METAL OXIDE FILM RES. 2W J 82K Ω	RN02JZPZ0823
R 1003	CARBON RES. 1/4W J 200 Ω (VCP-500D/VCP-500 model only)	RCX4JATZ0201
R 1004	CARBON RES. 1/4W J 200 Ω (VCP-500D/VCP-500 model only)	RCX4JATZ0201
R 1005	CARBON RES. 1/4W J 100K Ω (VIP-5000HC MKII/VIP-5000A MKII/VIP-5000LR/VIP-8000K MKII model only)	RCX4JATZ0104
R 1005	CARBON RES. 1/4W J 47K Ω (VCP-500D/VCP-500 model only)	RCX4JATZ0473
R 1006	CARBON RES. 1/4W J 100K Ω (VIP-5000HC MKII/VIP-5000A MKII/VIP-5000LR/VIP-8000K MKII model only)	RCX4JATZ0104
R 1006	CARBON RES. 1/4W J 47K Ω (VCP-500D/VCP-500 model only)	RCX4JATZ0473
R 1007	CARBON RES. 1/4W J 100K Ω (VIP-5000HC MKII/VIP-5000A MKII/VIP-5000LR/VIP-8000K MKII model only)	RCX4JATZ0104
R 1007	CARBON RES. 1/4W J 47K Ω (VCP-500D/VCP-500 model only)	RCX4JATZ0473
R 1008	CARBON RES. 1/4W J 47K Ω (VCP-500D/VCP-500 model only)	RCX4JATZ0473
R 1009	CARBON RES. 1/4W J 56K Ω (VCP-500D/VCP-500 model only)	RCX4JATZ0563
R 1010	CARBON RES. 1/4W J 100K Ω (VIP-5000HC MKII/VIP-5000A MKII/VIP-5000LR/VIP-8000K MKII model only)	RCX4JATZ0104
R 1010	CARBON RES. 1/4W J 56K Ω (VCP-500D/VCP-500 model only)	RCX4JATZ0563
R 1011	CARBON RES. 1/4W J 100K Ω (VIP-5000HC MKII/VIP-5000A MKII/VIP-5000LR/VIP-8000K MKII model only)	RCX4JATZ0104
R 1011	CARBON RES. 1/4W J 56K Ω (VCP-500D/VCP-500 model only)	RCX4JATZ0563
R 1012	CARBON RES. 1/4W J 100K Ω (VIP-5000HC MKII/VIP-5000A MKII/VIP-5000LR/VIP-8000K MKII model only)	RCX4JATZ0104
R 1012	CARBON RES. 1/4W J 56K Ω (VCP-500D/VCP-500 model only)	RCX4JATZ0563
R 1013	CARBON RES. 1/4W J 27 Ω (VIP-5000HC MKII/VIP-5000A MKII/VIP-5000LR/VIP-8000K MKII model only)	RCX4JATZ0270
R 1013	CARBON RES. 1/4W J 39 Ω (VCP-500D/VCP-500 model only)	RCX4JATZ0390
R 1014	CARBON RES. 1/4W J 27 Ω (VIP-5000HC MKII/VIP-5000A MKII/VIP-5000LR/VIP-8000K MKII model only)	RCX4JATZ0270
R 1014	CARBON RES. 1/4W J 39 Ω (VCP-500D/VCP-500 model only)	RCX4JATZ0390
R 1015	CARBON RES. 1/4W J 27 Ω (VIP-5000HC MKII/VIP-5000A MKII/VIP-5000LR/VIP-8000K MKII model only)	RCX4JATZ0270

Ref. No.	Description	Part No.
R 1015	CARBON RES. 1/4W J 39 Ω (VCP-500D/VCP-500 model only)	RCX4JATZ0390
R 1016	CARBON RES. 1/4W J 3.3 Ω (VIP-5000HC MKII/VIP-5000A MKII/VIP-5000LR/VIP-8000K MKII model only)	RCX4JATZ03R3
R 1016	CARBON RES. 1/4W J 2.2 Ω (VCP-500D/VCP-500 model only)	RCX4JATZ02R2
R 1017	CARBON RES. 1/4W J 3.3 Ω (VIP-5000HC MKII/VIP-5000A MKII/VIP-5000LR/VIP-8000K MKII model only)	RCX4JATZ03R3
R 1017	CARBON RES. 1/4W J 2.2 Ω (VCP-500D/VCP-500 model only)	RCX4JATZ02R2
R 1018	CARBON RES. 1/4W J 3.9K Ω or	RCX4JATZ0392
	CARBON RES. 1/6W J 3.9K Ω	132A392T
R 1019	CARBON RES. 1/4W J 470 Ω or	RCX4JATZ0471
	CARBON RES. 1/6W J 470 Ω (VIP-5000HC MKII/VIP-5000A MKII/VIP-5000LR/VIP-8000K MKII model only)	132A471T
R 1019	CARBON RES. 1/4W J 220 Ω or	RCX4JATZ0221
	CARBON RES. 1/6W J 220 Ω (VCP-500D/VCP-500 model only)	132A221T
R 1020	CARBON RES. 1/4W J 2.7K Ω or	RCX4JATZ0272
	CARBON RES. 1/6W J 2.7K Ω	132A272T
R 1021	CARBON RES. 1/4W J 1K Ω (VCP-500D/VCP-500 model only)	RCX4JATZ0102
R 1022	CARBON RES. 1/4W J 1K Ω (VCP-500D/VCP-500 model only)	RCX4JATZ0102
R 1023	CARBON RES. 1/4W J 220 Ω or	RCX4JATZ0221
	CARBON RES. 1/6W J 220 Ω	132A221T
R 1024	CARBON RES. 1/4W J 1K Ω or	RCX4JATZ0102
	CARBON RES. 1/6W J 1K Ω	132A102T
R 1025	CARBON RES. 1/4W J 2.4K Ω or	RCX4JATZ0242
	CARBON RES. 1/6W J 2.4K Ω	132A242T
R 1026	CARBON RES. 1/4W J 820 Ω or	RCX4JATZ0821
	CARBON RES. 1/6W J 820 Ω	132A821T
R 1027	CARBON RES. 1/4W J 2.2K Ω or	RCX4JATZ0222
	CARBON RES. 1/6W J 2.2K Ω	132A222T
R 1501	CARBON RES. 1/4W J 1K Ω or	RCX4JATZ0102
	CARBON RES. 1/6W J 1K Ω	132A102T
R 1503	CARBON RES. 1/4W J 1K Ω or	RCX4JATZ0102
	CARBON RES. 1/6W J 1K Ω (VIP-5000LR/VIP-8000K MKII model only)	132A102T
R 1508	CARBON RES. 1/4W J 10K Ω or	RCX4JATZ0103
	CARBON RES. 1/6W J 10K Ω (VIP-5000LR/VIP-8000K MKII model only)	132A103T
R 1509	CARBON RES. 1/4W J 33K Ω or	RCX4JATZ0333
	CARBON RES. 1/6W J 33K Ω (VIP-5000LR/VIP-8000K MKII model only)	132A333T
R 1511	CARBON RES. 1/4W J 11K Ω or	RCX4JATZ0113
	CARBON RES. 1/6W J 11K Ω (VIP-5000LR/VIP-8000K MKII model only)	132A113T
R 3002	CARBON RES. 1/4W J 680 Ω	RCX4JATZ0681
R 3003	CARBON RES. 1/4W J 680 Ω	RCX4JATZ0681
R 3004	CARBON RES. 1/4W J 1.5K Ω or	RCX4JATZ0152
	CARBON RES. 1/6W J 1.5K Ω (VIP-5000LR model only)	132A152T
R 3006	CARBON RES. 1/4W J 1K Ω or	RCX4JATZ0102
	CARBON RES. 1/6W J 1K Ω (VIP-5000LR model only)	132A102T
R 3007	CARBON RES. 1/4W J 3.9K Ω or	RCX4JATZ0392
	CARBON RES. 1/6W J 3.9K Ω (VIP-5000LR model only)	132A392T

Ref. No.	Description	Part No.
R 3008	CARBON RES. 1/4W J 560 Ω or	RCX4JATZ0561
	CARBON RES. 1/6W J 560 Ω (VIP-5000LR model only)	132A561T
R 3009	CARBON RES. 1/4W J 1.5K Ω or	RCX4JATZ0152
	CARBON RES. 1/6W J 1.5K Ω (VIP-5000LR model only)	132A152T
R 3010	CARBON RES. 1/4W J 3.9K Ω or	RCX4JATZ0392
	CARBON RES. 1/6W J 3.9K Ω (VIP-5000LR model only)	132A392T
R 3011	CARBON RES. 1/4W J 10K Ω or	RCX4JATZ0103
	CARBON RES. 1/6W J 10K Ω (VIP-5000HC MKII/VIP-5000A MKII/VCP-500D/VCP-500/VIP-80000K MKII model only)	132A103T
R 3011	CARBON RES. 1/4W J 8.2K Ω or	RCX4JATZ0822
	CARBON RES. 1/6W J 8.2K Ω (VIP-5000LR model only)	132A822T
R 3012	CARBON RES. 1/4W J 5.6K Ω or	RCX4JATZ0562
	CARBON RES. 1/6W J 5.6K Ω (VIP-5000LR model only)	132A562T
R 3013	CARBON RES. 1/4W J 1.2K Ω or	RCX4JATZ0122
	CARBON RES. 1/6W J 1.2K Ω (VIP-5000LR model only)	132A122T
R 3014	CARBON RES. 1/4W J 2.2K Ω or	RCX4JATZ0222
	CARBON RES. 1/6W J 2.2K Ω	132A222T
R 3015	ELECTROLYTIC CAP. 10μF/16V M H7 (VIP-5000LR model only)	526T106S
R 3017	CARBON RES. 1/4W J 22K Ω or	RCX4JATZ0223
	CARBON RES. 1/6W J 22K Ω (VIP-5000LR model only)	132A223T
R 3018	CARBON RES. 1/4W J 3.9K Ω or	RCX4JATZ0392
	CARBON RES. 1/6W J 3.9K Ω (VIP-5000LR model only)	132A392T
R 3019	CARBON RES. 1/4W J 270 Ω or	RCX4JATZ0271
	CARBON RES. 1/6W J 270 Ω	132A271T
R 3020	CARBON RES. 1/4W J 22K Ω or	RCX4JATZ0223
	CARBON RES. 1/6W J 22K Ω	132A223T
R 3021	CARBON RES. 1/4W J 1K Ω or	RCX4JATZ0102
	CARBON RES. 1/6W J 1K Ω	132A102T
R 3024	CARBON RES. 1/4W J 2.2K Ω or	RCX4JATZ0222
	CARBON RES. 1/6W J 2.2K Ω (VIP-5000HC MKII/VIP-5000A MKII/VCP-500D/VCP-500/VIP-5000LR model only)	132A222T
R 3024	CARBON RES. 1/4W J 3.3K Ω or	RCX4JATZ0332
	CARBON RES. 1/4W J 3.3K Ω (VIP-8000K MKII model only)	132A332T
R 3025	CARBON RES. 1/4W J 4.7K Ω or	RCX4JATZ0472
	CARBON RES. 1/6W J 4.7K Ω (VIP-5000HC MKII/VIP-5000A MKII/VCP-500D/VCP-500/VIP-5000LR model only)	132A472T
R 3026	CARBON RES. 1/4W J 8.2K Ω or	RCX4JATZ0822
	CARBON RES. 1/6W J 8.2K Ω (VIP-5000LR model only)	132A822T
R 3027	CARBON RES. 1/4W J 1M Ω or	RCX4JATZ0105
	CARBON RES. 1/6W J 1M Ω	132A105T
R 3028	CARBON RES. 1/4W J 390 Ω or	RCX4JATZ0391
	CARBON RES. 1/6W J 390 Ω	132A391T
R 3029	CARBON RES. 1/4W J 1K Ω or	RCX4JATZ0102
	CARBON RES. 1/6W J 1K Ω	132A102T
R 3030	CARBON RES. 1/4W J 1K Ω or	RCX4JATZ0102
	CARBON RES. 1/6W J 1K Ω	132A102T
R 3031	CARBON RES. 1/4W J 10K Ω or	RCX4JATZ0103

Ref. No.	Description	Part No.
	CARBON RES. 1/6W J 10K Ω	132A103T
R 3032	CARBON RES. 1/4W J 10K Ω or	RCX4JATZ0103
	CARBON RES. 1/6W J 10K Ω	132A103T
R 3033	CARBON RES. 1/4W J 27K Ω or	RCX4JATZ0273
	CARBON RES. 1/6W J 27K Ω	132A273T
R 3035	CARBON RES. 1/4W J 2.7K Ω or	RCX4JATZ0272
	CARBON RES. 1/6W J 2.7K Ω	132A272T
R 3036	CARBON RES. 1/4W J 2.7K Ω or	RCX4JATZ0272
	CARBON RES. 1/6W J 2.7K Ω (VIP-5000LR model only)	132A272T
R 3037	CARBON RES. 1/4W J 2.7K Ω or	RCX4JATZ0272
	CARBON RES. 1/6W J 2.7K Ω	132A272T
R 3038	CARBON RES. 1/4W J 560 Ω or	RCX4JATZ0561
	CARBON RES. 1/6W J 560 Ω (VIP-5000LR model only)	132A561T
R 3039	CARBON RES. 1/4W J 470 Ω or	RCX4JATZ0471
	CARBON RES. 1/6W J 470 Ω (VIP-5000LR model only)	132A471T
R 3040	CARBON RES. 1/4W J 220 Ω or	RCX4JATZ0221
	CARBON RES. 1/6W J 220 Ω (VIP-5000LR model only)	132A221T
R 3041	CARBON RES. 1/4W J 1.5K Ω or	RCX4JATZ0152
	CARBON RES. 1/6W J 1.5K Ω	132A152T
R 3042	CARBON RES. 1/4W J 4.7K Ω or	RCX4JATZ0472
	CARBON RES. 1/6W J 4.7K Ω	132A472T
R 3043	CARBON RES. 1/4W J 22K Ω or	RCX4JATZ0223
	CARBON RES. 1/6W J 22K Ω	132A223T
R 3044	CARBON RES. 1/4W J 2.2K Ω or	RCX4JATZ0222
	CARBON RES. 1/6W J 2.2K Ω	132A222T
R 3045	CARBON RES. 1/4W J 470 Ω or	RCX4JATZ0471
	CARBON RES. 1/6W J 470 Ω	132A471T
R 3046	CARBON RES. 1/4W J 8.2K Ω or	RCX4JATZ0822
	CARBON RES. 1/6W J 8.2K Ω	132A822T
R 3047	CARBON RES. 1/4W J 27K Ω or	RCX4JATZ0273
	CARBON RES. 1/6W J 27K Ω	132A273T
R 3048	CARBON RES. 1/4W J 820 Ω or	RCX4JATZ0821
	CARBON RES. 1/6W J 820 Ω (VIP-5000HC MKII/VIP-5000A MKII/VCP-500D/VCP-500/VIP-5000LR model only)	132A821T
R 3048	CARBON RES. 1/4W J 390 Ω or	RCX4JATZ0391
	CARBON RES. 1/4W J 390 Ω (VIP-8000K MKII model only)	132A391T
R 3049	CARBON RES. 1/4W J 1.8K Ω or	RCX4JATZ0182
	CARBON RES. 1/6W J 1.8K Ω (VIP-5000LR model only)	132A182T
R 3050	CARBON RES. 1/4W J 470K Ω or	RCX4JATZ0471
	CARBON RES. 1/6W J 470K Ω (VIP-5000LR model only)	132A471T
R 3051	CARBON RES. 1/4W J 1.2K Ω or	RCX4JATZ0122
	CARBON RES. 1/6W J 1.2K Ω (VIP-5000LR model only)	132A122T
R 3052	CARBON RES. 1/4W J 2.7K Ω or	RCX4JATZ0272
	CARBON RES. 1/6W J 2.7K Ω (VIP-5000LR model only)	132A272T
R 3053	CARBON RES. 1/4W J 390 Ω or	RCX4JATZ0391
	CARBON RES. 1/6W J 390 Ω	132A391T
R 3054	CARBON RES. 1/4W J 2.7K Ω or	RCX4JATZ0272
	CARBON RES. 1/6W J 2.7K Ω	132A272T
R 3055	CARBON RES. 1/4W J 10K Ω or	RCX4JATZ0103
	CARBON RES. 1/6W J 10K Ω	132A103T
R 3056	CARBON RES. 1/4W J 470 Ω or	RCX4JATZ0471

Ref. No.	Description	Part No.
	CARBON RES. 1/6W J 470 Ω	132A471T
R 3057	CARBON RES. 1/4W J 330 Ω or	RCX4JATZ0331
	CARBON RES. 1/6W J 330 Ω	132A331T
R 3058	CARBON RES. 1/4W J 390 Ω or	RCX4JATZ0391
	CARBON RES. 1/6W J 390 Ω	132A391T
R 3059	CARBON RES. 1/4W J 1.5K Ω or	RCX4JATZ0152
	CARBON RES. 1/6W J 1.5K Ω	132A152T
R 3060	CARBON RES. 1/4W J 1K Ω or	RCX4JATZ0102
	CARBON RES. 1/6W J 1K Ω	132A102T
R 3061	CARBON RES. 1/4W J 390 Ω or	RCX4JATZ0391
	CARBON RES. 1/6W J 390 Ω	132A391T
R 3062	CARBON RES. 1/4W J 390 Ω or	RCX4JATZ0391
	CARBON RES. 1/6W J 390 Ω	132A391T
R 3063	CARBON RES. 1/4W J 1K Ω or	RCX4JATZ0102
	CARBON RES. 1/6W J 1K Ω	132A102T
R 3064	CARBON RES. 1/4W J 6.8K Ω or	RCX4JATZ0682
	CARBON RES. 1/6W J 6.8K Ω	132A682T
	(VIP-5000LR model only)	
R 3065	CARBON RES. 1/4W J 10K Ω or	RCX4JATZ0103
	CARBON RES. 1/6W J 10K Ω	132A103T
	(VIP-5000LR/VIP-8000K MKII model only)	
R 3065	CARBON RES. 1/4W J 22K Ω or	RCX4JATZ0223
	CARBON RES. 1/6W J 22K Ω	132A223T
	(VIP-8000K MKII model only)	
R 3066	CARBON RES. 1/4W J 820 Ω or	RCX4JATZ0821
	CARBON RES. 1/6W J 820 Ω	132A821T
	(VIP-8000K MKII model only)	
R 3067	CARBON RES. 1/4W J 270 Ω or	RCX4JATZ0271
	CARBON RES. 1/6W J 270 Ω	132A271T
	(VIP-8000K MKII model only)	
R 3068	CARBON RES. 1/4W J 470 Ω or	RCX4JATZ0471
	CARBON RES. 1/6W J 470 Ω	132A471T
	(VIP-8000K MKII model only)	
R 3069	CARBON RES. 1/4W J 3.9K Ω or	RCX4JATZ0392
	CARBON RES. 1/6W J 3.9K Ω	132A392T
	(VIP-8000K MKII model only)	
R 3070	CARBON RES. 1/4W J 3.9K Ω or	RCX4JATZ0392
	CARBON RES. 1/6W J 3.9K Ω	132A392T
	(VIP-8000K MKII model only)	
R 3071	CARBON RES. 1/4W J 2.2K Ω or	RCX4JATZ0222
	CARBON RES. 1/6W J 2.2K Ω	132A222T
	(VIP-8000K MKII model only)	
R 3072	CARBON RES. 1/4W J 2.2K Ω or	RCX4JATZ0222
	CARBON RES. 1/6W J 2.2K Ω	132A222T
	(VIP-8000K MKII model only)	
R 3073	CARBON RES. 1/4W J 1.5 K Ω or	RCX4JATZ0152
	CARBON RES. 1/6W J 1.5K Ω	132A152T
	(VIP-8000K MKII model only)	
R 3074	CARBON RES. 1/4W J 220 Ω or	RCX4JATZ0221
	CARBON RES. 1/6W J 220 Ω	132A221T
	(VIP-8000K MKII model only)	
R 3075	CARBON RES. 1/4W J 680 Ω	RCX4JATZ0681
	(VIP-8000K MKII model only)	
R 3076	CARBON RES. 1/4W J 680 Ω	RCX4JATZ0681
	(VIP-8000K MKII model only)	
R 3077	CARBON RES. 1/4W J 1.5 K Ω or	RCX4JATZ0152
	CARBON RES. 1/6W J 1.5K Ω	132A152T
	(VIP-8000K MKII model only)	
R 3078	CARBON RES. 1/4W J 3.3 K Ω or	RCX4JATZ0332
	CARBON RES. 1/6W J 3.3 K Ω	132A332T
	(VIP-8000K MKII model only)	

Ref. No.	Description	Part No.
R 3079	CARBON RES. 1/4W J 1.5 K Ω or	RCX4JATZ0152
	CARBON RES. 1/6W J 1.5K Ω	132A152T
	(VIP-8000K MKII model only)	
R 3080	CARBON RES. 1/4W J 390 Ω or	RCX4JATZ0391
	CARBON RES. 1/6W J 390 Ω	132A391T
	(VIP-8000K MKII model only)	
R 4002	CARBON RES. 1/4W J 22K Ω or	RCX4JATZ0223
	CARBON RES. 1/6W J 22K Ω	132A223T
	(VIP-5000LR model only)	
R 4003	CARBON RES. 1/4W J 330K Ω or	RCX4JATZ0334
	CARBON RES. 1/6W J 330K Ω	132A334T
R 4004	CARBON RES. 1/4W J 10K Ω or	RCX4JATZ0103
	CARBON RES. 1/6W J 10K Ω	132A103T
R 4005	CARBON RES. 1/4W J 100 Ω or	RCX4JATZ0101
	CARBON RES. 1/6W J 100 Ω	132A101T
R 4006	CARBON RES. 1/4W J 8.2K Ω or	RCX4JATZ0822
	CARBON RES. 1/6W J 8.2K Ω	132A822T
	(VIP-5000HC MKII/VIP-5000A MKII/VCP-500D/VCP-500/VIP-8000K MKII model only)	
R 4007	CARBON RES. 1/4W J 2.2M Ω or	RCX4JATZ0225
	CARBON RES. 1/6W J 2.2M Ω	132A225T
	(VIP-5000LR model only)	
R 4008	CARBON RES. 1/4W J 27K Ω or	RCX4JATZ0273
	CARBON RES. 1/6W J 27K Ω	132A273T
	(VIP-5000LR model only)	
R 4009	CARBON RES. 1/4W J 4.7K Ω or	RCX4JATZ0472
	CARBON RES. 1/6W J 4.7K Ω	132A472T
	(VIP-5000LR model only)	
R 4010	CARBON RES. 1/4W J 2.2K Ω or	RCX4JATZ0222
	CARBON RES. 1/6W J 2.2K Ω	132A222T
R 4011	CARBON RES. 1/4W J 2.7K Ω or	RCX4JATZ0272
	CARBON RES. 1/6W J 2.7K Ω	132A272T
	(VIP-5000LR model only)	
R 4012	CARBON RES. 1/4W J 3.3K Ω or	RCX4JATZ0332
	CARBON RES. 1/6W J 3.3K Ω	132A332T
	(VIP-5000LR model only)	
R 4013	CARBON RES. 1/4W J 1.2K Ω or	RCX4JATZ0122
	CARBON RES. 1/6W J 1.2K Ω	132A122T
	(VIP-5000LR model only)	
R 4014	CARBON RES. 1/4W J 2.2K Ω or	RCX4JATZ0222
	CARBON RES. 1/6W J 2.2K Ω	132A222T
	(VIP-5000LR model only)	
R 4018	CARBON RES. 1/4W J 22 Ω or	RCX4JATZ0220
	CARBON RES. 1/6W J 22 Ω	132A220T
	(VIP-5000LR model only)	
R 4019	CARBON RES. 1/4W J 47 Ω or	RCX4JATZ0470
	CARBON RES. 1/6W J 47 Ω	132A470T
	(VIP-5000LR model only)	
R 4020	CARBON RES. 1/4W J 4.7K Ω or	RCX4JATZ0472
	CARBON RES. 1/6W J 4.7K Ω	132A472T
	(VIP-5000LR/VIP-8000K MKII model only)	
R 4021	CARBON RES. 1/4W J 4.7 Ω or	RCX4JATZ04R7
	CARBON RES. 1/6W J 4.7 Ω	132A479T
	(VIP-5000LR model only)	
R 4024	CARBON RES. 1/4W J 10K Ω or	RCX4JATZ0103
	CARBON RES. 1/6W J 10K Ω	132A103T
	(VIP-5000HC MKII/VIP-5000A MKII/VCP-500D/VCP-500 model only)	
R 4025	CARBON RES. 1/4W J 33K Ω or	RCX4JATZ0333
	CARBON RES. 1/6W J 33K Ω	132A333T
	(VIP-5000HC MKII/VIP-5000A MKII/VCP-500D/VCP-500 model only)	

Ref. No.	Description	Part No.
R 4026	CARBON RES. 1/4W J 10K Ω or	RCX4JATZ0103
	CARBON RES. 1/6W J 10K Ω	132A103T
	(VIP-5000HC MKII/VIP-5000A MKII/VCP-500D/VCP-500 model only)	
R 4028	CARBON RES. 1/4W J 100K Ω	RCX4JATZ0104
	(VIP-5000HC MKII/VIP-5000A MKII/VCP-500D/VCP-500 model only)	
R 4029	CARBON RES. 1/4W J 180 Ω or	RCX4JATZ0181
	CARBON RES. 1/6W J 180 Ω	132A181T
	(VIP-5000LR model only)	
R 4030	CARBON RES. 1/4W J 4.7K Ω or	RCX4JATZ0472
	CARBON RES. 1/6W J 4.7K Ω	132A472T
R 4301	CARBON RES. 1/4W J 10 K Ω or	RCX4JATZ0103
	CARBON RES. 1/6W J 10K Ω	132A103T
	(VIP-8000K MKII model only)	
R4302	CARBON RES. 1/4W J 2.2 K Ω or	RCX4JATZ0222
	CARBON RES. 1/6W J 2.2K Ω	132A222T
	(VIP-8000K MKII model only)	
R 4303	CARBON RES. 1/4W J 4.7 K Ω or	RCX4JATZ0472
	CARBON RES. 1/6W J 4.7 K Ω	132A472T
	(VIP-8000K MKII model only)	
R 4304	CARBON RES. 1/4W J 150 K Ω or	RCX4JATZ0154
	CARBON RES. 1/6W J 150K Ω	132A154T
	(VIP-8000K MKII model only)	
R 4305	CARBON RES. 1/4W J 10 K Ω or	RCX4JATZ0103
	CARBON RES. 1/6W J 10 K Ω	132A103T
	(VIP-8000K MKII model only)	
R 4306	CARBON RES. 1/4W J 2.2 K Ω or	RCX4JATZ0222
	CARBON RES. 1/6W J 2.2 K Ω	132A222T
	(VIP-8000K MKII model only)	
R 4307	CARBON RES. 1/4W J 150 K Ω or	RCX4JATZ0154
	CARBON RES. 1/6W J 150 K Ω	132A154T
	(VIP-8000K MKII model only)	
R 4308	CARBON RES. 1/4W J 4.7 K Ω or	RCX4JATZ0472
	CARBON RES. 1/6W J 4.7 K Ω	132A472T
	(VIP-8000K MKII model only)	
R 4309	CARBON RES. 1/4W J 22 K Ω or	RCX4JATZ0223
	CARBON RES. 1/6W J 22 K Ω	132A223T
	(VIP-8000K MKII model only)	
R 4310	CARBON RES. 1/4W J 22 K Ω or	RCX4JATZ0223
	CARBON RES. 1/6W J 22 K Ω	132A223T
	(VIP-8000K MKII model only)	
R 4311	CARBON RES. 1/4W J 47 K Ω or	RCX4JATZ0473
	CARBON RES. 1/6W J 47 K Ω	132A473T
	(VIP-8000K MKII model only)	
R 4312	CARBON RES. 1/4W J 56 K Ω or	RCX4JATZ0563
	CARBON RES. 1/6W J 56 K Ω	132A563T
	(VIP-8000K MKII model only)	
R 4313	CARBON RES. 1/4W J 120 K Ω or	RCX4JATZ0124
	CARBON RES. 1/6W J 120 K Ω	132A124T
	(VIP-8000K MKII model only)	
R 4314	CARBON RES. 1/4W J 33 K Ω or	RCX4JATZ0333
	CARBON RES. 1/6W J 33 K Ω	132A333T
	(VIP-8000K MKII model only)	
R 4315	CARBON RES. 1/4W J 220 K Ω or	RCX4JATZ0224
	CARBON RES. 1/6W J 220 K Ω	132A224T
	(VIP-8000K MKII model only)	
R 4316	CARBON RES. 1/4W J 10 K Ω or	RCX4JATZ0103
	CARBON RES. 1/6W J 10 K Ω	132A103T
	(VIP-8000K MKII model only)	
R 4317	CARBON RES. 1/4W J 22 K Ω or	RCX4JATZ0223

Ref. No.	Description	Part No.
	CARBON RES. 1/6W J 22 K Ω	132A223T
	(VIP-8000K MKII model only)	
R 4318	CARBON RES. 1/4W J 6.8 K Ω or	RCX4JATZ0682
	CARBON RES. 1/6W J 6.8 K Ω	132A682T
	(VIP-8000K MKII model only)	
R 4319	CARBON RES. 1/4W J 33 K Ω or	RCX4JATZ0333
	CARBON RES. 1/6W J 33 K Ω	132A333T
	(VIP-8000K MKII model only)	
R 4321	CARBON RES. 1/4W J 4.7 K Ω or	RCX4JATZ0472
	CARBON RES. 1/6W J 4.7 K Ω	132A472T
	(VIP-8000K MKII model only)	
R 4322	CARBON RES. 1/4W J 56 K Ω or	RCX4JATZ0563
	CARBON RES. 1/6W J 56 K Ω	132A563T
	(VIP-8000K MKII model only)	
R 4323	CARBON RES. 1/4W J 47 K Ω or	RCX4JATZ0473
	CARBON RES. 1/6W J 47 K Ω	132A473T
	(VIP-8000K MKII model only)	
R 4324	CARBON RES. 1/4W J 150 K Ω or	RCX4JATZ0154
	CARBON RES. 1/6W J 150 K Ω	132A154T
	(VIP-8000K MKII model only)	
R 4325	CARBON RES. 1/4W J 5.6 K Ω or	RCX4JATZ0562
	CARBON RES. 1/6W J 5.6 K Ω	132A562T
	(VIP-8000K MKII model only)	
R 4326	CARBON RES. 1/4W J 100 K Ω	RCX4JATZ0104
	(VIP-8000K MKII model only)	
R 4327	CARBON RES. 1/4W J 5.6 K Ω or	RCX4JATZ0562
	CARBON RES. 1/6W J 5.6 K Ω	132A562T
	(VIP-8000K MKII model only)	
R 4328	CARBON RES. 1/4W J 100 K Ω	RCX4JATZ0104
	(VIP-8000K MKII model only)	
R 4329	CARBON RES. 1/4W J 22 K Ω or	RCX4JATZ0223
	CARBON RES. 1/6W J 22 K Ω	132A223T
	(VIP-8000K MKII model only)	
R 4330	CARBON RES. 1/4W J 22 K Ω or	RCX4JATZ0223
	CARBON RES. 1/6W J 22 K Ω	132A223T
	(VIP-8000K MKII model only)	
R 4331	CARBON RES. 1/4W J 7.5 K Ω or	RCX4JATZ0752
	CARBON RES. 1/6W J 7.5 K Ω	132A752T
	(VIP-8000K MKII model only)	
R 4332	CARBON RES. 1/4W J 33 K Ω or	RCX4JATZ0333
	CARBON RES. 1/6W J 33 K Ω	132A333T
	(VIP-8000K MKII model only)	
R 4333	CARBON RES. 1/4W J 270 K Ω or	RCX4JATZ0274
	CARBON RES. 1/6W J 270 K Ω	132A274T
	(VIP-8000K MKII model only)	
R 4334	CARBON RES. 1/4W J 100 K Ω	RCX4JATZ0104
	(VIP-8000K MKII model only)	
R 4335	CARBON RES. 1/4W J 100 Ω or	RCX4JATZ0101
	CARBON RES. 1/6W J 100 Ω	132A101T
	(VIP-8000K MKII model only)	
R 4336	CARBON RES. 1/4W J 10 K Ω or	RCX4JATZ0103
	CARBON RES. 1/6W J 10 K Ω	132A103T
	(VIP-8000K MKII model only)	
R 4337	CARBON RES. 1/4W J 15 K Ω or	RCX4JATZ0153
	CARBON RES. 1/6W J 15 K Ω	132A153T
	(VIP-8000K MKII model only)	
R 4357	CARBON RES. 1/4W J 2.2 K Ω or	RCX4JATZ0222
	CARBON RES. 1/6W J 2.2 K Ω	132A222T
	(VIP-8000K MKII model only)	
R 4360	CARBON RES. 1/4W J 4.7 K Ω or	RCX4JATZ0472
	CARBON RES. 1/6W J 4.7 K Ω	132A472T
	(VIP-8000K MKII model only)	

Ref. No.	Description	Part No.
R 4363	CARBON RES. 1/4W J 47 K Ω or	RCX4JATZ0473
	CARBON RES. 1/6W J 47 K Ω	132A473T
	(VIP-8000K MKII model only)	
R 5702	CARBON RES. 1/4W J 100 Ω or	RCX4JATZ0101
	CARBON RES. 1/6W J 100 Ω	132A101T
R 6001	CARBON RES. 1/4W J 2.2K Ω or	RCX4JATZ0222
	CARBON RES. 1/6W J 2.2K Ω	132A222T
R 6002	CARBON RES. 1/4W J 10K Ω or	RCX4JATZ0103
	CARBON RES. 1/6W J 10K Ω	132A103T
R 6003	CARBON RES. 1/4W J 10K Ω or	RCX4JATZ0103
	CARBON RES. 1/6W J 10K Ω	132A103T
R 6004	CARBON RES. 1/4W J 10K Ω or	RCX4JATZ0103
	CARBON RES. 1/6W J 10K Ω	132A103T
R 6005	CARBON RES. 1/4W J 2.2K Ω or	RCX4JATZ0222
	CARBON RES. 1/6W J 2.2K Ω	132A222T
R 6006	CARBON RES. 1/4W J 4.7M Ω or	RCX4JATZ0475
	CARBON RES. 1/6W J 4.7M Ω	132A475T
R 6007	CARBON RES. 1/4W J 18K Ω or	RCX4JZPZ0183
	CARBON RES. 1/6W J 18K Ω	132A183
R 6008	CARBON RES. 1/4W J 560K Ω or	RCX4JATZ0564
	ARBON RES. 1/6W J 560K Ω	13LA564T
R 6009	CARBON RES. 1/4W J 2.2K Ω or	RCX4JATZ0222
	CARBON RES. 1/6W J 2.2K Ω	132A222T
R 6010	CARBON RES. 1/4W J 470K Ω or	RCX4JATZ0474
	CARBON RES. 1/6W J 470K Ω	132A474T
R 6011	CARBON RES. 1/4W J 10K Ω or	RCX4JATZ0103
	CARBON RES. 1/6W J 10K Ω	132A103T
R 6012	CARBON RES. 1/4W J 270K Ω or	RCX4JATZ0274
	CARBON RES. 1/6W J 270K Ω	132A274T
R 6014	CARBON RES. 1/4W J 1K Ω or	RCX4JATZ0102
	CARBON RES. 1/6W J 1K Ω	132A102T
R 6015	CARBON RES. 1/4W J 1.8K Ω or	RCX4JATZ0182
	CARBON RES. 1/6W J 1.8K Ω	132A182T
R 6017	CARBON RES. 1/4W J 10K Ω or	RCX4JATZ0103
	CARBON RES. 1/6W J 10K Ω	132A103T
R 6018	CARBON RES. 1/4W J 10K Ω or	RCX4JATZ0103
	CARBON RES. 1/6W J 10K Ω	132A103T
R 6019	CARBON RES. 1/4W J 47K Ω or	RCX4JATZ0473
	CARBON RES. 1/6W J 47K Ω	132A473T
R 6023	CARBON RES. 1/4W J 1M Ω or	RCX4JATZ0105
	CARBON RES. 1/6W J 1M Ω	132A105T
R 6024	CARBON RES. 1/4W J 560K Ω or	RCX4JATZ0564
	CARBON RES. 1/6W J 560K Ω	132A564T
R 6026	CARBON RES. 1/4W J 56 Ω	RCX4JATZ0560
R 6027	CARBON RES. 1/4W J 56 Ω	RCX4JATZ0560
R 6028	CARBON RES. 1/4W J 56 Ω	RCX4JATZ0560
R 6029	CARBON RES. 1/4W J 56 Ω	RCX4JATZ0560
REEL SENSOR EXCLUSIVE(A)		
R 6030	CARBON RES. 1/4W J 47K Ω or	RCX4JZPZ0473
	CARBON RES. 1/6W J 47K Ω	132A473
R 6031	CARBON RES. 1/4W J 150 Ω or	RCX4JZPZ0151
	CARBON RES. 1/6W J 150 Ω	132A151
REEL SENSOR EXCLUSIVE(B)		
R 6030	CARBON RES. 1/4W J 10K Ω or	RCX4JZPZ0103
	CARBON RES. 1/6W J 10K Ω	132A103
R 6031	CARBON RES. 1/4W J 180 Ω or	RCX4JZPZ0181
	CARBON RES. 1/6W J 180 Ω	132A181
R 6033	CARBON RES. 1/4W J 10K Ω or	RCX4JATZ0103
	CARBON RES. 1/6W J 10K Ω	132A103T
R 6034	CARBON RES. 1/4W J 47K Ω or	RCX4JATZ0473

Ref. No.	Description	Part No.
	CARBON RES. 1/6W J 47K Ω	132A473T
	(VIP-5000LR model only)	
R 6035	CARBON RES. 1/4W J 1 Ω	RCX4JATZ0010
R 6036	CARBON RES. 1/4W J 1 Ω	RCX4JATZ0010
R 6037	CARBON RES. 1/4W J 1 Ω	RCX4JATZ0010
R 6038	CARBON RES. 1/4W J 10K Ω or	RCX4JATZ0103
	CARBON RES. 1/6W J 10K Ω	132A103T
R 6039	CARBON RES. 1/4W J 10K Ω or	RCX4JATZ0103
	CARBON RES. 1/6W J 10K Ω	132A103T
R 6040	CARBON RES. 1/4W J 10K Ω or	RCX4JATZ0103
	CARBON RES. 1/6W J 10K Ω	132A103T
R 6041	CARBON RES. 1/4W J 10K Ω or	RCX4JATZ0103
	CARBON RES. 1/6W J 10K Ω	132A103T
R 6042	CARBON RES. 1/4W J 10K Ω or	RCX4JATZ0103
	CARBON RES. 1/6W J 10K Ω	132A103T
R 6043	CARBON RES. 1/4W J 12K Ω or	RCX4JATZ0123
	CARBON RES. 1/6W J 12K Ω	132A123T
R 6044	CARBON RES. 1/4W J 8.2K Ω or	RCX4JATZ0822
	CARBON RES. 1/6W J 8.2K Ω	132A822T
R 6046	CARBON RES. 1/4W J 47K Ω or	RCX4JATZ0473
	CARBON RES. 1/6W J 47K Ω	132A473T
R 6047	CARBON RES. 1/4W J 330K Ω or	RCX4JATZ0334
	CARBON RES. 1/6W J 330K Ω	132A334T
R 6049	CARBON RES. 1/4W J 2.2K Ω or	RCX4JATZ0222
	CARBON RES. 1/6W J 2.2K Ω	132A222T
R 6050	CARBON RES. 1/4W J 330K Ω or	RCX4JATZ0334
	CARBON RES. 1/6W J 330K Ω	132A334T
R 6052	CARBON RES. 1/4W J 39K Ω or	RCX4JATZ0393
	CARBON RES. 1/6W J 39K Ω	132A393T
R 6053	CARBON RES. 1/4W J 10K Ω or	RCX4JATZ0103
	CARBON RES. 1/6W J 10K Ω	132A103T
R 6055	CARBON RES. 1/4W J 330K Ω or	RCX4JATZ0334
	CARBON RES. 1/6W J 330K Ω	132A334T
R 6056	CARBON RES. 1/4W J 6.8K Ω or	RCX4JATZ0682
	CARBON RES. 1/6W J 6.8K Ω	132A682T
	(VIP-5000LR model only)	
R 6057	CARBON RES. 1/4W J 2.2K Ω or	RCX4JATZ0222
	CARBON RES. 1/6W J 2.2K Ω	132A222T
R 6059	CARBON RES. 1/4W J 820 Ω or	RCX4JATZ0821
	CARBON RES. 1/6W J 820 Ω	132A821T
R 6060	CARBON RES. 1/4W J 2.2K Ω or	RCX4JATZ0222
	CARBON RES. 1/6W J 2.2K Ω	132A222T
R 6061	CARBON RES. 1/4W J 10K Ω or	RCX4JATZ0103
	CARBON RES. 1/6W J 10K Ω	132A103T
R 6062	CARBON RES. 1/4W J 10K Ω or	RCX4JATZ0103
	CARBON RES. 1/6W J 10K Ω	132A103T
R 6065	CARBON RES. 1/4W J 82K Ω or	RCX4JATZ0823
	CARBON RES. 1/6W J 82K Ω	132A823T
R 6066	CARBON RES. 1/4W J 470 Ω or	RCX4JATZ0471
	CARBON RES. 1/6W J 330 Ω	132A471T
	(VIP-5000LR model only)	
R 6067	CARBON RES. 1/4W J 4.7K Ω or	RCX4JATZ0472
	CARBON RES. 1/6W J 4.7K Ω	132A472T
R 6068	CARBON RES. 1/4W J 4.7K Ω or	RCX4JATZ0472
	CARBON RES. 1/6W J 4.7K Ω	132A472T
R 6069	CARBON RES. 1/4W J 82K Ω or	RCX4JATZ0823
	CARBON RES. 1/6W J 82K Ω	132A823T
R 6071	CARBON RES. 1/4W J 8.2K Ω or	RCX4JATZ0822
	CARBON RES. 1/6W J 8.2K Ω	132A822T
R 6072	CARBON RES. 1/4W J 10K Ω or	RCX4JATZ0103

Ref. No.	Description	Part No.
	CARBON RES. 1/6W J 10K Ω	132A103T
R 6075	CARBON RES. 1/4W J 4.7K Ω or	RCX4JATZ0472
	CARBON RES. 1/6W J 4.7K Ω	132A472T
R 7501	CARBON RES. 1/4W J 68 Ω or	RCX4JATZ0680
	CARBON RES. 1/6W J 68 Ω	132A680T
R 7502	CARBON RES. 1/4W J 150 Ω or	RCX4JATZ0151
	CARBON RES. 1/6W J 150 Ω	132A151T
R 7503	CARBON RES. 1/4W J 180 Ω or	RCX4JATZ0181
	CARBON RES. 1/6W J 180 Ω	132A181T
R 7504	CARBON RES. 1/4W J 75 Ω or	RCX4JATZ0750
	CARBON RES. 1/6W J 75 Ω	132A750T
	(VIP-5000LR model only)	
R 7505	CARBON RES. 1/4W J 47K Ω or	RCX4JATZ0473
	CARBON RES. 1/6W J 47K Ω	132A473T
	(VIP-5000A MKII model only)	
R 7505	CARBON RES. 1/4W J 47K Ω	RCX4JATZ0473
	(VCP-500 model only)	
R 7506	CARBON RES. 1/4W J 4.7K Ω or	RCX4JATZ0472
	CARBON RES. 1/6W J 4.7K Ω	132A472T
	(VIP-5000A MKII/VCP-500 model only)	
SWITCHES		
SW6002	PUSH SWITCH EVQ-21509K or	SST0101MS011
	PUSH SWITCH SKHVBH or	SST0101AL011
	PUSH SWITCH S0R-142HS R66-4519	SST0101MM011
	(VIP-5000LR model only)	
SW6003	PUSH SWITCH EVQ-21509K or	SST0101MS011
	PUSH SWITCH SKHVBH or	SST0101AL011
	PUSH SWITCH SOR-142HS R66-4519	SST0101MM011
SW6005	PUSH SWITCH SPPB61	SSP0102AL001
	(VIP-5000LR model only)	
SW6007	PUSH SWITCH SW-112-3	SSP0101KB001
VARIABLE RESISTORS		
VR3001	CARBON POTENTIOMETER 4.7K Ω or	238A394Y
	CARBON POTENTIOMETER 5K Ω or	238A422Y
	CARBON POTENTIOMETER 5K Ω or	238N492Y
	CARBON POTENTIOMETER 5K Ω B	VRCB502KA010
	(VIP-5000LR model only)	
VR3002	CARBON POTENTIOMETER 4.7K Ω or	238A394Y
	CARBON POTENTIOMETER 5K Ω or	238A422Y
	CARBON POTENTIOMETER 5K Ω or	238N492Y
	CARBON POTENTIOMETER 5K Ω B	VRCB502KA010
	(VIP-5000LR model only)	
VR3003	CARBON POTENTIOMETER 4.7K Ω or	238A394Y
	CARBON POTENTIOMETER 5K Ω or	238A422Y
	CARBON POTENTIOMETER 5K Ω or	238N492Y
	CARBON POTENTIOMETER 5K Ω B	VRCB502KA010
	(VIP-5000LR model only)	
VR4301	VOLUME 10K Ω A or	VRCA103AL013
	VOLUME 10K Ω A	VRCA103MS013
	(VIP-8000K MKII model only)	
VR4302	VOLUME 10K Ω A or	VRCA103AL013
	VOLUME 10K Ω A	VRCA103MS013
	(VIP-8000K MKII model only)	
VR4303	VOLUME 10K Ω A or	VRCA103AL013
	VOLUME 10K Ω A	VRCA103MS013
	(VIP-8000K MKII model only)	
VR6001	CARBON POTENTIOMETER 100K Ω or	238A402Y
	CARBON POTENTIOMETER 100K Ω or	238A427Y
	CARBON POTENTIOMETER 100K Ω or	238N497Y
	CARBON POTENTIOMETER 100K Ω B	VRCB104KA010

Ref. No.	Description	Part No.
CRYSTAL OSCILLATORS		
X 3001	CRYSTAL OSCILLATOR 4.433619MHZ or	1811366
	CRYSTAL OSCILLATOR 4.433619MHZ	1811388
X 6001	CRYSTAL OSCILLATOR 12MHZ	FXE126TFS001
MISCELLANEOUS		
	HOLDER, REEL SENSOR	0VM200965B
	LEAD CLAMPER	1790356
2B 4	HEAT SINK	0VM405258
	(VCP-500D/VCP-500 model only)	
2B 8	BUSH, LED R8700U6:VD6574	6N50114
2L041	SCREW, A-TIGHT M3X10 BIND HEAD+	DBM13100
	(VCP-500D/VCP-500 model only)	
2L 051	SCREW, S-TIGHT, BIND HEAD M3X5	GBMS3050
RF CONVERTOR EXCLUSIVE(A)		
A 11	JACK BOARD(A)	0VM201405
	(VIP-5000HCMKII/VIP-5000LR/VIP-8000K	
	MKII model only)	
RF CONVERTOR EXCLUSIVE(B)		
A 11	JACK BOARD(A)	0VM201447
	(VIP-5000HCMKII/VIP-5000LR/VIP-8000K	
	MKII model only)	
A 11	JACK BOARD (A)	0VM301944
	(VIP-50000A MKII/VCP-500 model only)	
A 12	JACK BOARD(B)	0VM301935
	(VIP-5000HC MKII/VIP-5000A MKII/VCP-	
	500D/VCP-500/VIP-8000K MKII model only)	
AC1001 ⚠	AC CORD LA-1296-2 or	WAE0202LW006
	AC CORD EP-631-E01 or	WAE0202NW008
	AC CORD	WAE0202BX001
DL3001	COMB FILTER 4.433619MHZ or	1813522
	COMB FILTER 4.433619MHZ	1813274
	(VIP-5000HC MKII/VIP-5000A MKII/VCP-	
	500D/VCP-500/VIP-5000LR model only)	
DL3001	COMB FILTER 2H+1H or	FDZ445PKL001
	COMB FILTER 2H+1H	FDZ445PAC001
	(VIP-8000K MKII model only)	
F 1001 ⚠	FUSE T1.60A/250V or	1790483
	FUSE T1.60A/250V	1790994
FH1001	FUSE HOLDER FH-V-03078-1 or	XH01Z00DK002
	HOLDER, FUSE CNT41-0014	1790424
FH1002	FUSE HOLDER FH-V-03078-1 or	XH01Z00DK002
	HOLDER, FUSE CNT41-0014	1790424
JK4301	PHONE JACK HLJ5315-01-4100 or	JYBL030HD001
	PHONE JACK JY-6303-01-120GD or	JYBL040JD001
	PHONE JACK LGR6511-0401	JYBL030SR001
	(VIP-8000K MKII model only)	
JK4302	PHONE JACK HLJ5315-01-4100 or	JYBL030HD001
	PHONE JACK JY-6303-01-120GD or	JYBL040JD001
	PHONE JACK LGR6511-0401	JYBL030SR001
	(VIP-8000K MKII model only)	
JK7501	RCA JACK(YELLOW/WHITE)	JXRL030HD002
	JPJ8011-01-340	
JK7502	RCA JACK (YELLOW/WHITE)	JXRL030HD002
	JPJ8011-01-340	
	(VIP-5000LR model only)	
RF CONVERTOR EXCLUSIVE(A)		
MD7501	RF CONVERTOR(PAL-G/K)	URFCPLSJR001
	NJH3032GE001 or	
	RF CONVERTOR(PAL-G/K) ENC-47997	URFCPLSMS009
	(VIP-5000HCMKII/VCP-500D/VIP-	
	5000LR/VIP-8000K MKII model only)	
MD7501	RF CONVERTOR(PAL-B) MDLK5D634A or	URFCPLBAL004

Ref. No.	Description	Part No.
	RF CONVERTOR YAA21-0826G (VIP-5000A MKII/VCP-500 model only)	URFCPLBJC001
RF CONVERTOR EXCLUSIVE(B)		
MD7501	RF CONVERTOR MDLK6E735A or	1813510
	RF CONVERTOR E1653GF or	URFCPLSSH001
	RF CONVERTOR ENC-47975 or	URFCPLSMS007
	RF CONVERTOR ENC-47992 (VIP-5000HC MKII/VCP-500D/VIP-5000LR model only)	URFCPLSMS008
SN6001	DEW SENSOR EYHS-10R4 (VIP-5000LR model only)	PCZHUMZMS004
T 1001 ⚠	PULSE TRANS FT-28C85 or	LTT00ZPKM005
	PULSE TRANS S0989BC A0531 (VIP-5000HC MKII/VIP-5000A MKII/VIP-5000LR/VIP-8000K MKII model only)	LTT00ZPSA008
T 1001 ⚠	SWITCHING TRANS FT-28C82 or	LTT00ZPKM003
	PULSE TRANS S0986 A0530 (VCP-500D/VCP-500 model only)	LTT00ZPSA006

LED (MCV-B) CBA

Ref. No.	Description	Part No.
	LED (MCV-B) CBA Consists of the following:	----------
	CAPACITORS	
C 5701	ELECTROLYTIC CAP. 47μF/6.3V M H7	526R476S
LEVEL METER IC EXCLUSIVE(A)		
C 5704	ELECTROLYTIC CAP. 10μF/16V M H7	526T106
C 5705	ELECTROLYTIC CAP. 4.7μF/25V M H7	526U475
LEVEL METER IC EXCLUSIVE(B)		
C 5704	ELECTROLYTIC CAP. 0.47μF/50V M H7	526W474
C 5705	ELECTROLYTIC CAP. 4.7μF/25V M H7	526U475
	CONNECTOR	
CN5701	PIN HEADER, ANGLE, 11P (VIP-5000HC MKII/VIP-5000A MKII/VCP-500D/VCP-500/VIP-8000K MKII model only)	5700297
CN5701	PIN HEADER, ANGLE, 13P (VIP-5000LR model only)	5700299
	DIODES	
LED EXCLUSIVE(A)		
D 5701	LED(ORANGE) SEL2915DMEX	QP6Z2915DMEX
D 5702	LED(GREEN) SEL2315GMEX	QP5Z2315GMEX
D 5703	LED(ORANGE) SEL2915DMEX	QP6Z2915DMEX
D 5704	LED(RED) SEL2115RMEX	QP4Z2115RMEX
D 5705	LED(RED) SEL2115RMEX	QP4Z2115RMEX
D 5706	LED(RED) SEL2115RMEX	QP4Z2115RMEX
D 5707	LED(RED) SEL2115RMEX	QP4Z2115RMEX
D 5708	LED(RED) SEL2115RMEX (VIP-5000LR model only)	QP4Z2115RMEX
D 5709	LED(RED) SEL2115RMEX (VIP-5000LR model only)	QP4Z2115RMEX
D 5717	LED(GREEN) SEL2315GMEX	QP5Z2315GMEX
D 5718	LED(GREEN) SEL2315GMEX	QP5Z2315GMEX
D 5719	LED(GREEN) SEL2315GMEX	QP5Z2315GMEX
D 5720	LED(RED) SEL2115RMEX	QP4Z2115RMEX
D 5721	LED(RED) SEL2115RMEX	QP4Z2115RMEX
LED EXCLUSIVE(B)		
D 5701	LED(ORANGE) 3YD4	NP4Z00003YD4
D 5702	LED(GREEN) 3GD4	NP4Z00003GD4
D 5703	LED(ORANGE) 3YD4	NP4Z00003YD4
D 5704	LED(RED) 3RD4	NP4Z00003RD4

Ref. No.	Description	Part No.
D 5705	LED(RED) 3RD4	NP4Z00003RD4
D 5706	LED(RED) 3RD4	NP4Z00003RD4
D 5707	LED(RED) 3RD4	NP4Z00003RD4
D 5708	LED(RED) 3RD4 (VIP-5000LR model only)	NP4Z00003RD4
D 5709	LED(RED) 3RD4 (VIP-5000LR model only)	NP4Z00003RD4
D 5717	LED(GREEN) 3GD4	NP4Z00003GD4
D 5718	LED(GREEN) 3GD4	NP4Z00003GD4
D 5719	LED(GREEN) 3GD4	NP4Z00003GD4
D 5720	LED(RED) 3RD4	NP4Z00003RD4
D 5721	LED(RED) 3RD4	NP4Z00003RD4
	ICS	
LEVEL METER IC EXCLUSIVE(A)		
IC5702	IC, LEVEL METER LB1403N	GLB1403N****
LEVEL METER IC EXCLUSIVE(B)		
IC5702	IC KIA6966S	NSBLA0SJY001
	RESISTORS	
R 5704	CARBON RES. 1/4W J 270 Ω or	RCX4JATZ0271
	CARBON RES. 1/6W J 270 Ω	132A271T
R 5705	CARBON RES. 1/4W J 330 Ω or	RCX4JATZ0331
	CARBON RES. 1/6W J 330 Ω	132A331T
R 5706	CARBON RES. 1/4W J 330 Ω or	RCX4JATZ0331
	CARBON RES. 1/6W J 330 Ω	132A331T
R 5707	CARBON RES. 1/4W J 330 Ω or	RCX4JATZ0331
	CARBON RES. 1/6W J 330 Ω	132A331T
R 5708	CARBON RES. 1/4W J 330 Ω or	RCX4JATZ0331
	CARBON RES. 1/6W J 330 Ω	132A331T
R 5709	CARBON RES. 1/4W J 330 Ω or	RCX4JATZ0331
	CARBON RES. 1/6W J 330 Ω	132A331T
R 5710	CARBON RES. 1/4W J 330 Ω or	RCX4JATZ0331
	CARBON RES. 1/6W J 330 Ω (VIP-5000LR model only)	132A331T
R 5711	CARBON RES. 1/4W J 330 Ω or	RCX4JATZ0331
	CARBON RES. 1/6W J 330 Ω (VIP-5000LR model only)	132A331T
R 5725	CARBON RES. 1/4W J 330 Ω or	RCX4JATZ0331
	CARBON RES. 1/6W J 330 Ω	132A331T
R 5726	CARBON RES. 1/4W J 330 Ω or	RCX4JATZ0331
	CARBON RES. 1/6W J 330 Ω	132A331T
LEVEL METER IC EXCLUSIVE(A)		
R 5727	CARBON RES. 1/4W J 10K Ω or	RCX4JZPZ0103
	CARBON RES. 1/6W J 10K Ω	132A103
R 5729	CARBON RES. 1/4W J 180K Ω or	RCX4JZPZ0184
	CARBON RES. 1/6W J 180K Ω	132A184
LEVEL METER IC EXCLUSIVE(B)		
R 5731	CARBON RES. 1/4W J 270K Ω or	RCX4JZPZ0274
	CARBON RES. 1/6W J 270K Ω	132A274
	MISCELLANEOUS	
2B 7	HOLDER, L.E.D.	0VM201412
RS5701	REMOTE CONTROL UNIT HC-278N or	USESJRSKK008
	REMOTE CONTROL UNIT NJH32H367A	USESJRSJR004

FUNCTION (MCV-C) CBA

Ref. No.	Description	Part No.
	FUNCTION (MCV-C) CBA Consists of the following:	----------
	CONNECTOR	
CN5501	ANGLE SOCKET CONNECTOR, 3P	1770598
	RESISTORS	
R 5501	CARBON RES. 1/4W J 1.8K Ω or	RCX4JATZ0182
	CARBON RES. 1/6W J 1.8K Ω	132A182T
R 5502	CARBON RES. 1/4W J 1K Ω or	RCX4JATZ0102
	CARBON RES. 1/6W J 1K Ω	132A102T
R 5503	CARBON RES. 1/4W J 1.2K Ω or	RCX4JATZ0122
	CARBON RES. 1/6W J 1.2K Ω	132A122T
R 5504	CARBON RES. 1/4W J 1.5K Ω or	RCX4JATZ0152
	CARBON RES. 1/6W J 1.5K Ω	132A152T
R 5505	CARBON RES. 1/4W J 2.2K Ω or	RCX4JATZ0222
	CARBON RES. 1/6W J 2.2K Ω	132A222T
R 5506	CARBON RES. 1/4W J 3.9K Ω or	RCX4JATZ0392
	CARBON RES. 1/6W J 3.9K Ω	132A392T
	SWITCHES	
SW5501	PUSH SWITCH EVQ-21509K or	SST0101MS011
	PUSH SWITCH SKHVBH or	SST0101AL011
	PUSH SWITCH SOR-142HS R66-4519	SST0101MM011
SW5502	PUSH SWITCH EVQ-21509K or	SST0101MS011
	PUSH SWITCH SKHVBH or	SST0101AL011
	PUSH SWITCH SOR-142HS R66-4519	SST0101MM011
SW5503	PUSH SWITCH EVQ-21509K or	SST0101MS011
	PUSH SWITCH SKHVBH or	SST0101AL011
	PUSH SWITCH SOR-142HS R66-4519	SST0101MM011
SW5504	PUSH SWITCH EVQ-21509K or	SST0101MS011
	PUSH SWITCH SKHVBH or	SST0101AL011
	PUSH SWITCH SOR-142HS R66-4519	SST0101MM011
SW5505	PUSH SWITCH EVQ-21509K or	SST0101MS011
	PUSH SWITCH SKHVBH or	SST0101AL011
	PUSH SWITCH SOR-142HS R66-4519	SST0101MM011
SW5506	PUSH SWITCH EVQ-21509K or	SST0101MS011
	PUSH SWITCH SKHVBH or	SST0101AL011
	PUSH SWITCH SOR-142HS R66-4519	SST0101MM011
SW5507	PUSH SWITCH EVQ-21509K or	SST0101MS011
	PUSH SWITCH SKHVBH or	SST0101AL011
	PUSH SWITCH SOR-142HS R66-4519	SST0101MM011

EXPLODED VIEWS

* Marked Parts see the Electrical Parts List.

Front Panel (Models: A,B,C,D,E)

COMPARISON CHART OF MODELS AND MARKS

MODEL	MARK	MODEL	MARK
VIP-5000HC MKII	A	VCP-500	D
VIP-5000A MKII	B	VIP-5000LR	E
VCP-500D	C	VIP-8000K MKII	F

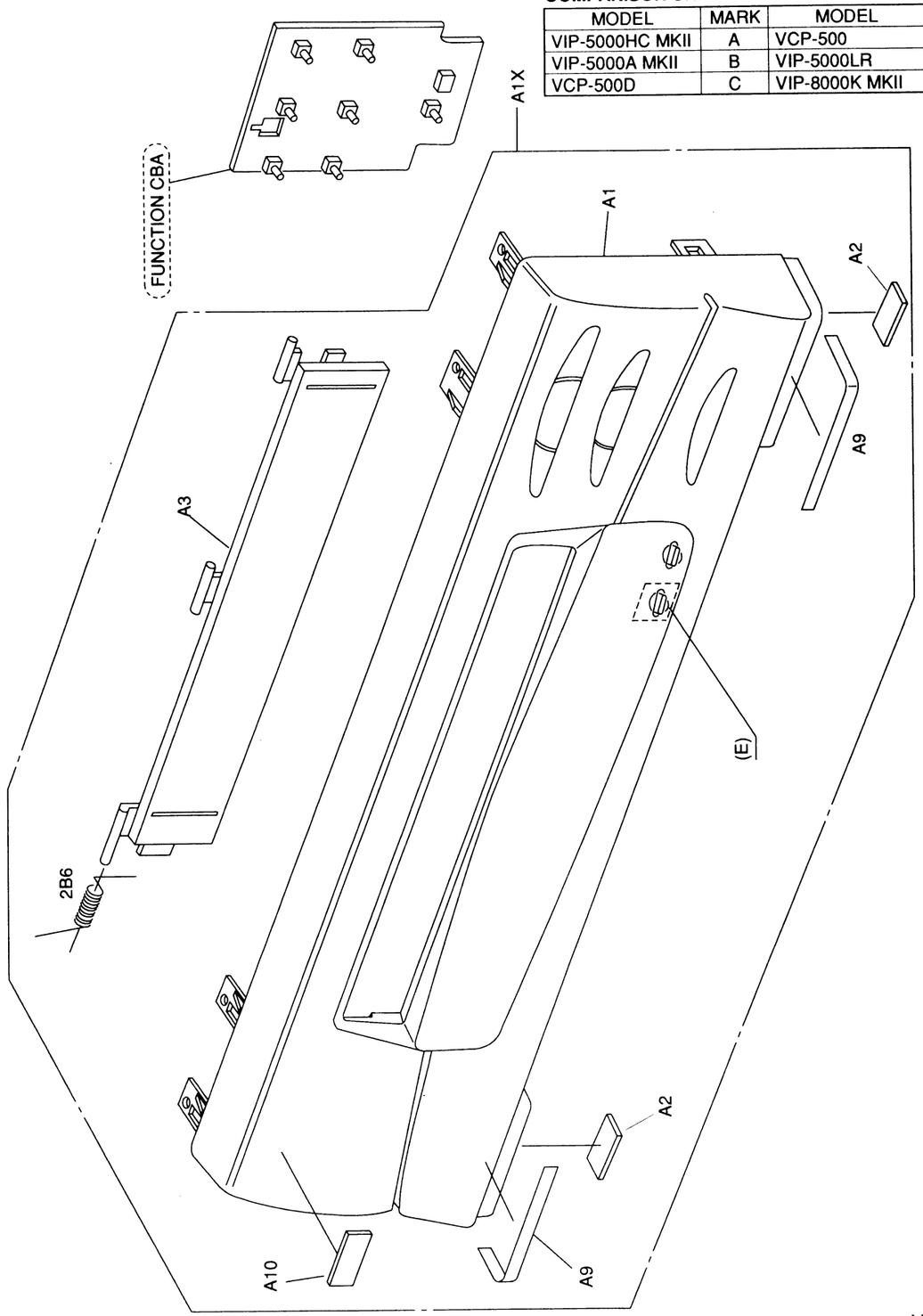

1-14-1

V2000FEX

* Marked Parts see the Electrical Parts List.

Front Panel (Model: F)

COMPARISON CHART OF MODELS AND MARKS

MODEL	MARK	MODEL	MARK
VIP-5000HC MKII	A	VCP-500	D
VIP-5000A MKII	B	VIP-5000LR	E
VCP-500D	C	VIP-8000K MKII	F

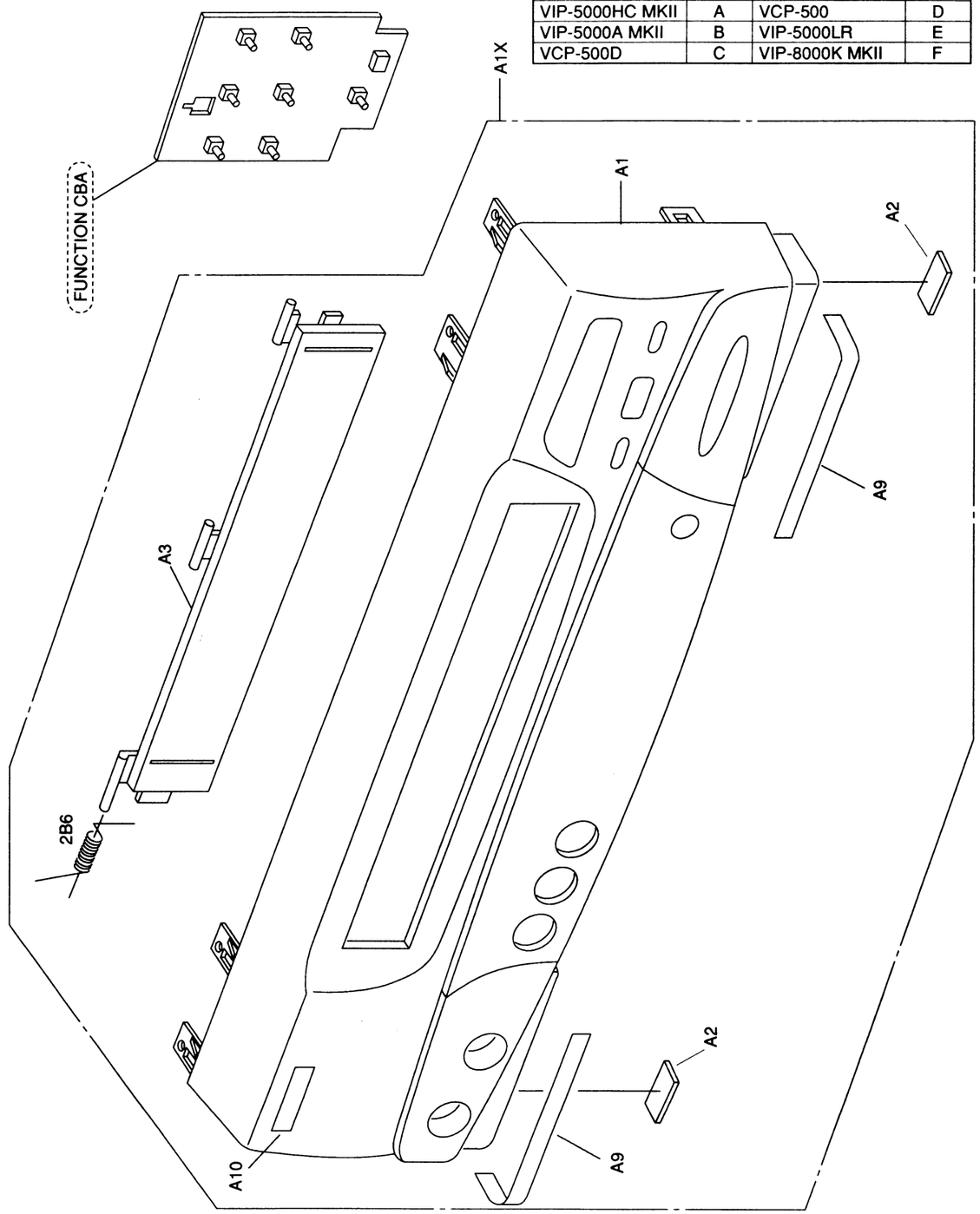

1-14-2

V2010FEX

Cabinet

See the Electrical Parts List for parts with this mark.

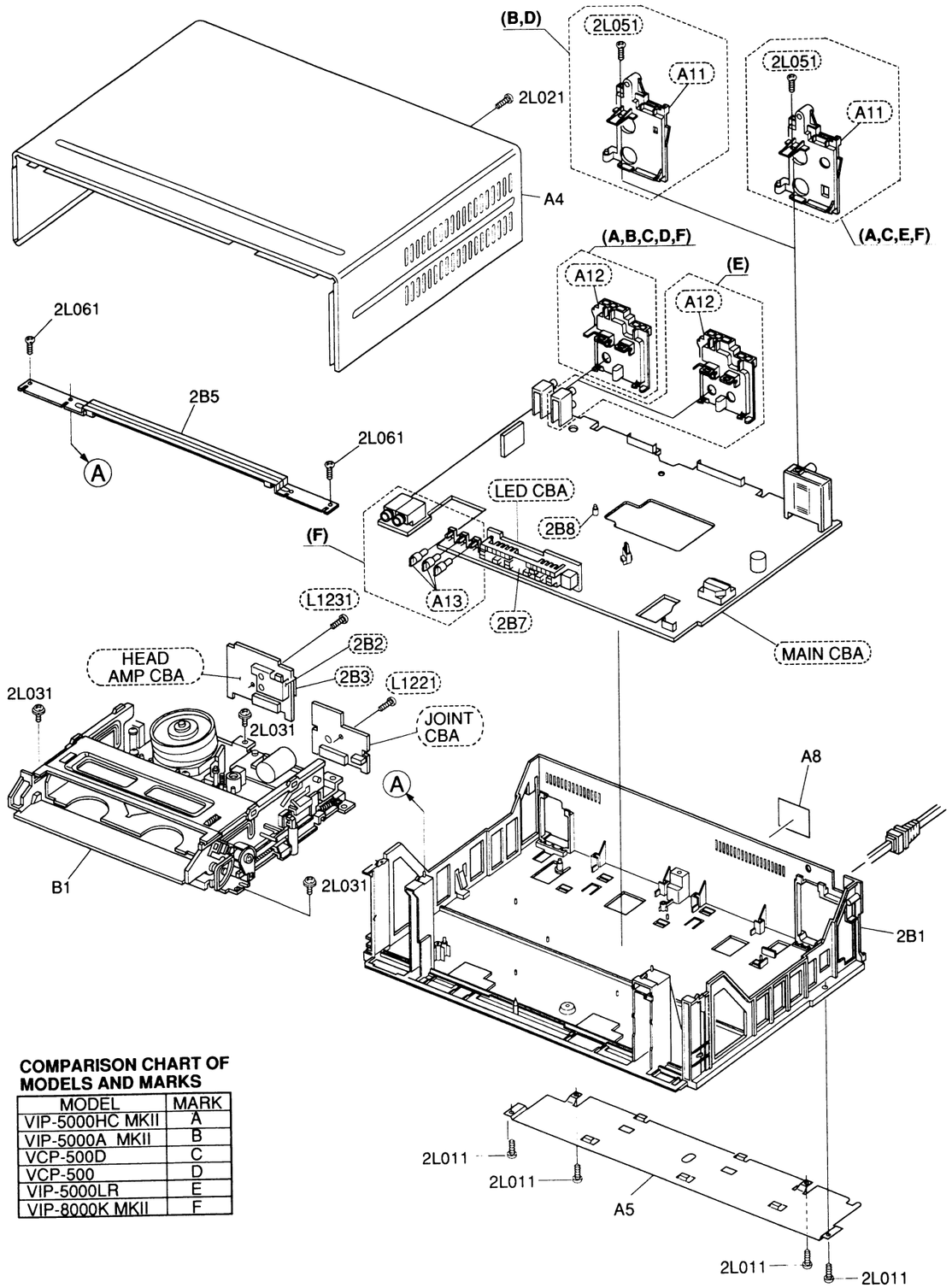

COMPARISON CHART OF MODELS AND MARKS

MODEL	MARK
VIP-5000HC MKII	A
VIP-5000A MKII	B
VCP-500D	C
VCP-500	D
VIP-5000LR	E
VIP-8000K MKII	F

CABINET PARTS LIST

PRODUCT SAFETY NOTE: Products marked with a ⚠ have special characteristics important to safety. Before replacing any of these components, read carefully the product safety notice in this service manual. Don't degrade the safety of the product through improper servicing.

Ref. No.	Description	Part No.
A1X	FRONT ASSEMBLY (VIP-5000HC MKII model only)	0VM201413
A1X	FRONT ASSEMBLY (VIP-5000A MKII model only)	0VM201435
A1X	FRONT ASSEMBLY (VCP-500D model only)	0VM201423
A1X	FRONT ASSEMBLY (VCP-500 model only)	0VM201436
A1X	FRONT ASSEMBLY (VIP-5000LR model only)	0VM201424
A1X	FRONT ASSEMBLY (VIP-8000K MKII model only)	0VM201474
A 1	FRONT PANEL ASSEMBLY (VIP-5000HC MKII model only)	0VM201413X
A 1	FRONT PANEL ASSEMBLY (VIP-5000A MKII model only)	0VM201435X
A 1	FRONT PANEL ASSEMBLY (VCP-500D model only)	0VM201423X
A 1	FRONT PANEL ASSEMBLY (VCP-500 model only)	0VM201436X
A 1	FRONT PANEL ASSEMBLY (VIP-5000LR model only)	0VM201424X
A 1	FRONT PANEL ASSEMBLY (VIP-8000K MKII model only)	0VM201474X
A 2	FOOT	0VM403657
A 3	DOOR, CASSETTE (VIP-5000HC MKII/VIP-5000A MKII/VCP-500D/VCP-500/VIP-5000LR model only)	0VM405109
A 3	DOOR, CASSETTE (VIP-8000K MKII model only)	0VM405297
A 4	CASE, TOP	0VM100504
A 5	PANEL, BOTTOM	0VM201403
A 8 ⚠	LABEL, RATING (VIP-5000HC MKII model only)	0VM405118
A 8 ⚠	LABEL, RATING (VIP-5000A MKII model only)	0VM405121
A 8 ⚠	LABEL, RATING (VCP-500D model only)	0VM405123
A 8 ⚠	LABEL, RATING (VCP-500 model only)	0VM405125
A 8 ⚠	LABEL, RATING (VIP-5000LR model only)	0VM405128
A 8 ⚠	LABEL, RATING (VIP-8000K MKII model only)	0VM405299
A 9	FILM, INSULATOR (VIP-5000HC MKII/VIP-5000A MKII/VCP-500D/VCP-500/VIP-5000LR model only)	0VM405069
A 9	FILM, INSULATOR (VIP-8000K MKII model only)	0VM405253
A 10	BADGE VD40444	6D52254
A 13	KNOB (VOL.) (VIP-8000K MKII model only)	0VM405095

Ref. No.	Description	Part No.
B 1	DECK ASSEMBLY or	N2116AN
	DECK ASSEMBLY (VCP-5000HC MKII/VIP-5000A MKII/VCP-500D/VCP-500 /VIP-8000K MKII model only)	N2116XN
B 1	DECK ASSEMBLY or	N2102AN
	DECK ASSEMBLY (VIP-5000LR model only)	N2102XN
B 88	CLEANING CALKING ASSEMBLY	0VM403982
B 89	CLEANING BEARING	0VM403208
B 90	CLEANING ROLLER	0VM403613
B 91	CLEANING SPRING	0VM403614
B 92	P.S.W 7.5X2.1X0.5T	0VM403615
B 93	CUT P.S.W 6.1X1.6X0.5T	0VM403616
B 94	IR ARM	0VM301195
B 95	SPRING IR	0VM403211
B 96	SHAFT CIR	0VM403214D
B 97	P.S.W A	0VM402624
2B 1	CHASSIS	0VM000057
2B 5	HOLDER, DECK	0VM301936
2B 6	SPRING, DOOR	0VM403265
L1261	SCREW, SEMS, PAN HEAD M3X5	CPM33050
2L 011	SCREW, RAMI-TIGHT M3X10 +BIND	DZM23100
2L 021	SCREW, P-TIGHT BIND HEAD 4X12 +	GBKP4120
2L 031	SCREW, P-TIGHT, WASHER HEAD M3X10	GCMP3100
2L 061	SCREW, RAMI-TIGHT M3X10 +BIND	DZM23100
	ACCESSORY KIT	
X 1	REMOCON BOX RRS2000-1401R (VIP-5000HC MKII/VIP-5000A MKII/VCP-500D/VCP-500/VIP-8000K MKII model only)	UREMT12SR011
X 1	REMOCON BOX RRS2000-1401R (VIP-5000LR model only)	UREMT12SR017
X 2 ⚠	OWNER'S MANUAL (VIP-5000HC MKII model only)	0VMN01313
X 2 ⚠	OWNER'S MANUAL (VIP-5000A MKII model only)	0VMN01314
X 2 ⚠	OWNER'S MANUAL (VCP-500D model only)	0VMN01315
X 2 ⚠	OWNER'S MANUAL (VCP-500 model only)	0VMN01316
X 2 ⚠	OWNER'S MANUAL (VIP-5000LR model only)	0VMN01317
X 2 ⚠	OWNER'S MANUAL (VIP-8000K MKII model only)	0VMN01358
X 3	RF CORD PAL 1.2M (VIP-5000HC MKII/VIP-5000A MKII/VCP-500D/VCP-500/VIP-5000LR model only)	WPZ0122TM001

Ref. No.	Description	Part No.
X 3	RF CABLE WRL1991-0090 (VIP-8000K MKII model only)	WPZ0102SR001
X 7	DRY BATTERY UM-3(M) 2PCS PACK or	1790849
	DRY BATTERY UM3/RS6 2PCS PACK (VIP-5000HC MKII/VIP-5000A MKII/VCP-500D/VCP-500/VIP-5000LR model only)	579W099

DECK MECHANISM BLOCK

VIDEO CASSETTE PLAYER

VIP-5000HC MKII / VIP-5000A MKII / VCP-500D / VCP-500 / VIP-5000LR / VIP-8000K MKII

Sec. 2: Deck Mechanism Block

- Standard Maintenance
- Alignment for Mechanism
- Disassembly / Assembly of Mechanism
- Deck Schematic Diagram
- Deck CBA' s
- Deck Exploded Views
- Deck Parts List

TABLE OF CONTENTS

STANDARD MAINTENANCE

Service Schedule of Components

H: Hours ○: Check ●: Change

Deck		Periodic Service Schedule			
Ref. No.	Part Name	1,000 H	2,000 H	3,000 H	4,000 H
B2	Cylinder Assembly	○	●	○	●
B3	Loading Motor			●	
B6	Pinch Roller Arm Assembly		●		●
B8	Pulley Assembly		●		●
B21	Loading Belt		●		●
B27	Band Brake Assembly		●		●
B28	Main Brake S Assembly		●		●
B29	Main Brake T Assembly		●		●
B30	T Brake Arm Assembly		●		●
B31	ACE Head Assembly			●	
B32	Reel Assembly			●	
B37	Capstan Motor		●		●
B52	Capstan Belt		●		●
B54	Ground Brush Assembly			●	
B73	Full Erase Head			●	
B132	Clutch Assembly		●		●
B133	Arm Idler Assembly		●		●

Note:

1. Clean all parts for the tape transport (Upper Drum with Video Head / Pinch Roller / Audio Control Head / Full Erase Head) using 90% Isopropyl Alcohol.
2. After cleaning the parts, do all DECK ADJUSTMENTS.
3. For the reference numbers listed above, refer to Deck Exploded Views.

Cleaning

Cleaning of Video Head

Clean the head with a head cleaning stick or chamois skin.

Procedure

1. Remove the top cabinet.
2. Put on a glove (thin type) to avoid touching the upper and lower drum with your bare hand.
3. Put a few drops of 90% Isopropyl alcohol on the head cleaning stick or on the chamois skin and, by slightly pressing it against the head tip, turn the upper drum to the right and to the left.

Notes:

1. The video head surface is made of very hard material, but since it is very thin, avoid cleaning it vertically.
2. Wait for the cleaned part to dry thoroughly before operating the unit.
3. Do not reuse a stained head cleaning stick or a stained chamois skin.

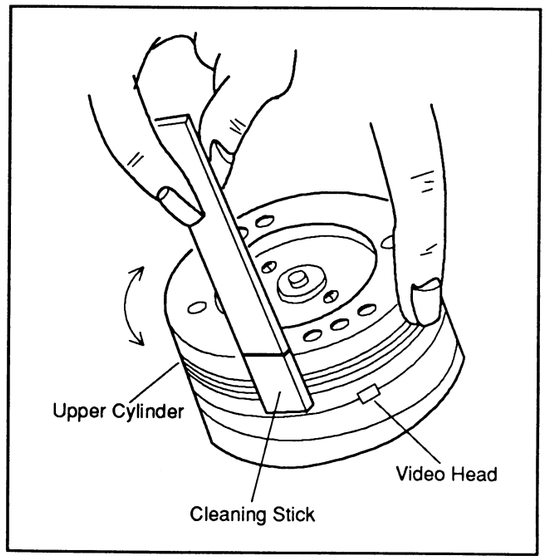

Cleaning of Audio Control Head

Clean the head with a cotton swab.

Procedure

1. Remove the top cabinet.
2. Dip the cotton swab in 90% isopropyl alcohol and clean the audio control head. Be careful not to damage the upper drum and other tape running parts.

Notes:

1. Avoid cleaning the audio control head vertically.
2. Wait for the cleaned part to dry thoroughly before operating the unit or damage may occur.

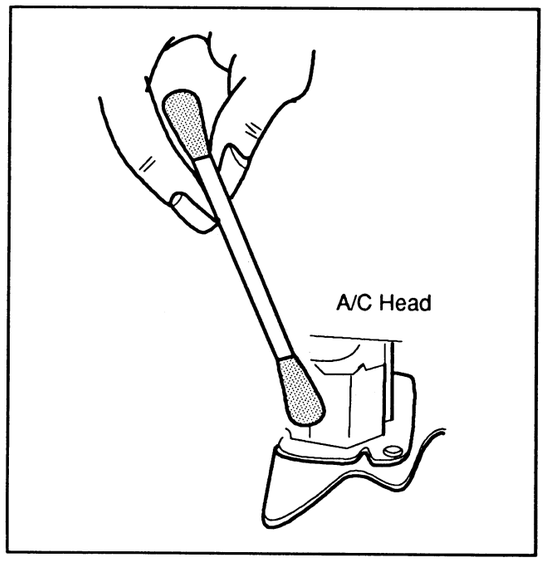

SERVICE FIXTURE AND TOOLS

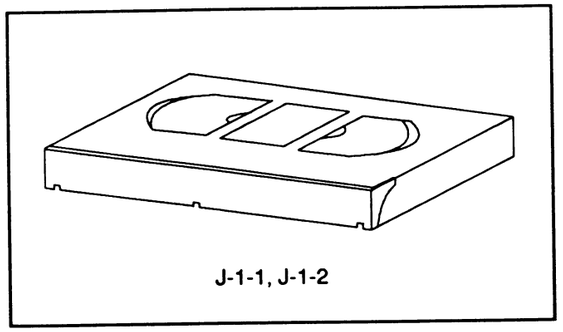
J-1-1, J-1-2

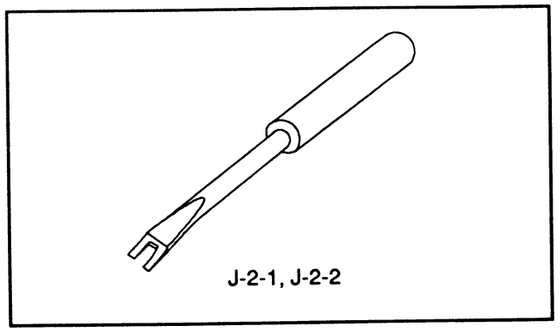
J-2-1, J-2-2

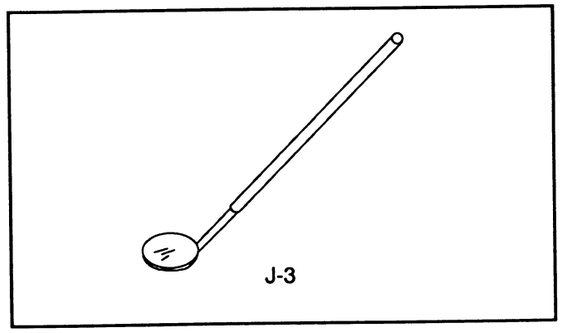
J-3

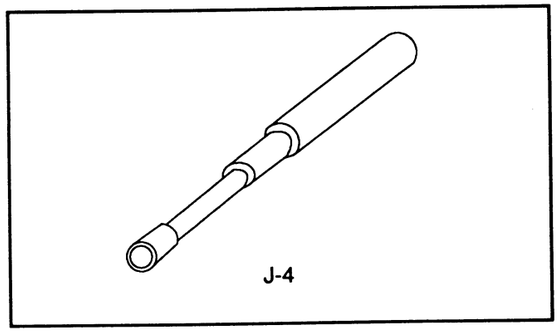
J-4

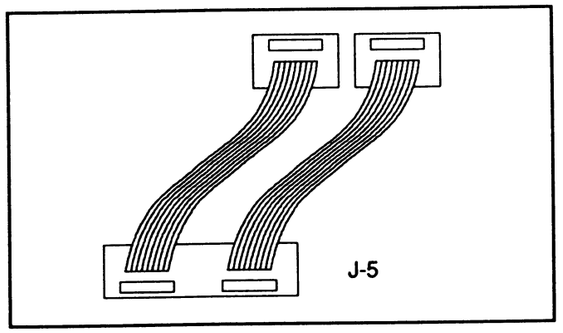
J-5

Ref. No.	Name	Part No.	Adjustment
J-1-1	Alignment Tape	F6-A	Head Adjustment of Audio Control Head
J-1-2	Alignment Tape	F6-N	Azimuth and X Value Adjustment of Audio Control Head / Adjustment of Envelope Waveform
J-2-1	Special Driver, Large	FSJ-0001	X Value
J-2-2	Special Driver, Small	FSJ-0006	Guide Roller
J-3	Mirror	FSJ-0004	Tape Transportation Check
J-4	Box Driver, Mx3	FSJ-0005	A/C Head Height
J-5	Deck Extention Cable	N1099XA	All Mechanical and Electrical Adjustments

Note: Before starting any adjustment, take the Deck Assembly out of the cabinet and use J-5 to connect the Deck Assembly with the Main CBA.

MECHANICAL ALIGNMENT PROCEDURES

Service Information

A. Method for Manual Tape Loading/Unloading of VCR.
To place the Cassette Holder in the down position, turn the Pulley Assembly clockwise as viewed from the back of Deck. To place the Cassette Holder in the up position, turn the Pulley Assembly counterclockwise as viewed from the back of the Deck.

B. How to place the Cassette Holder in the down position without a cassette tape.

METHOD

1. Disconnect the AC Plug and remove the Top Cover.
2. Cover the LED Sensors located below Prism L and Prism R.

Note: The tape sensor is extremely susceptible to damage from static electricity. When handling the tape sensor use a conductive mat, a grounded soldering iron, and so on, to protect the tape sensor from static damage.

3. Turn the Pulley Assembly clockwise as viewed from the back of the Deck.

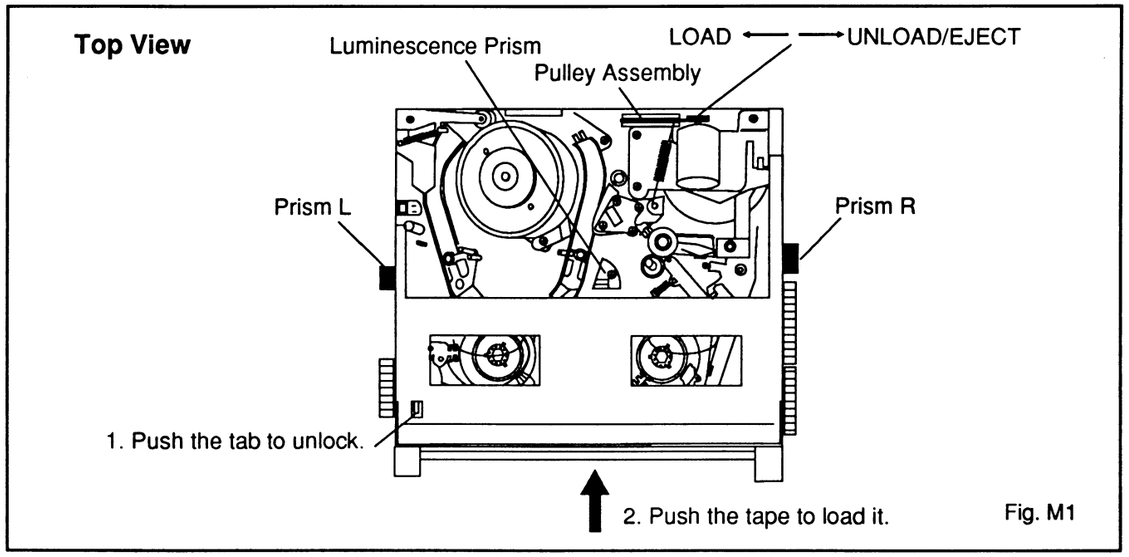

Fig. M1

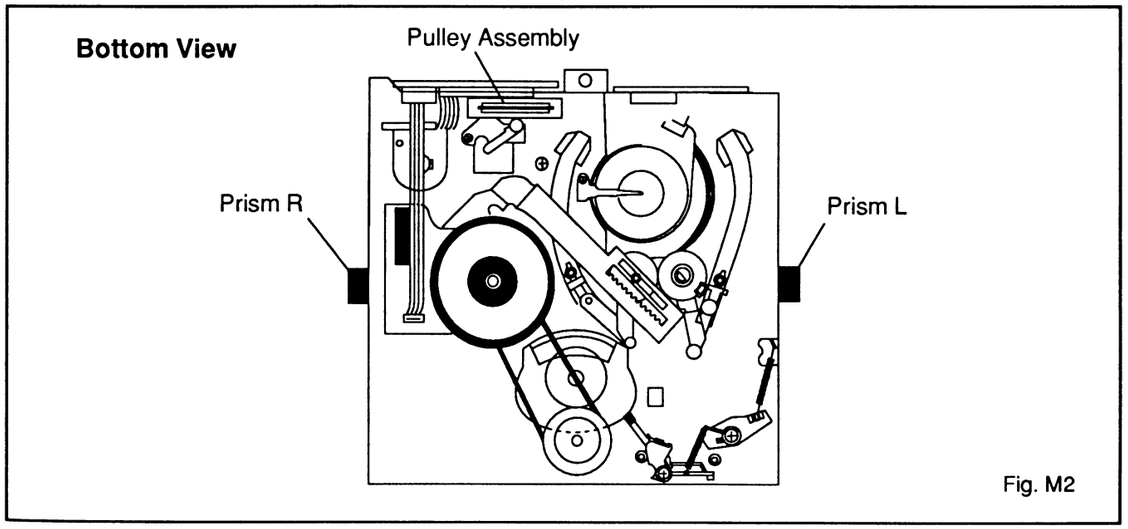

Fig. M2

1. Tape Interchangeability Alignment (Final Alignment)

Note: To do these alignment procedures, be sure that the Tracking Control Circuit is set to the Neutral mode.

Equipment required :

Dual Trace Oscilloscope
VHS Alignment Tape (F6-A, F6-N)
Post Alignment Screwdriver
X-Position Alignment Fixture
Screwdriver (For the Tape Guide Rollers)
Box Driver M3

Note: After this Mechanical Alignment is completed, secure screw [C] shown in Fig.M6 with lock paint and do all the procedures in the Electrical Adjustment.

Tape Running Alignment Flowchart

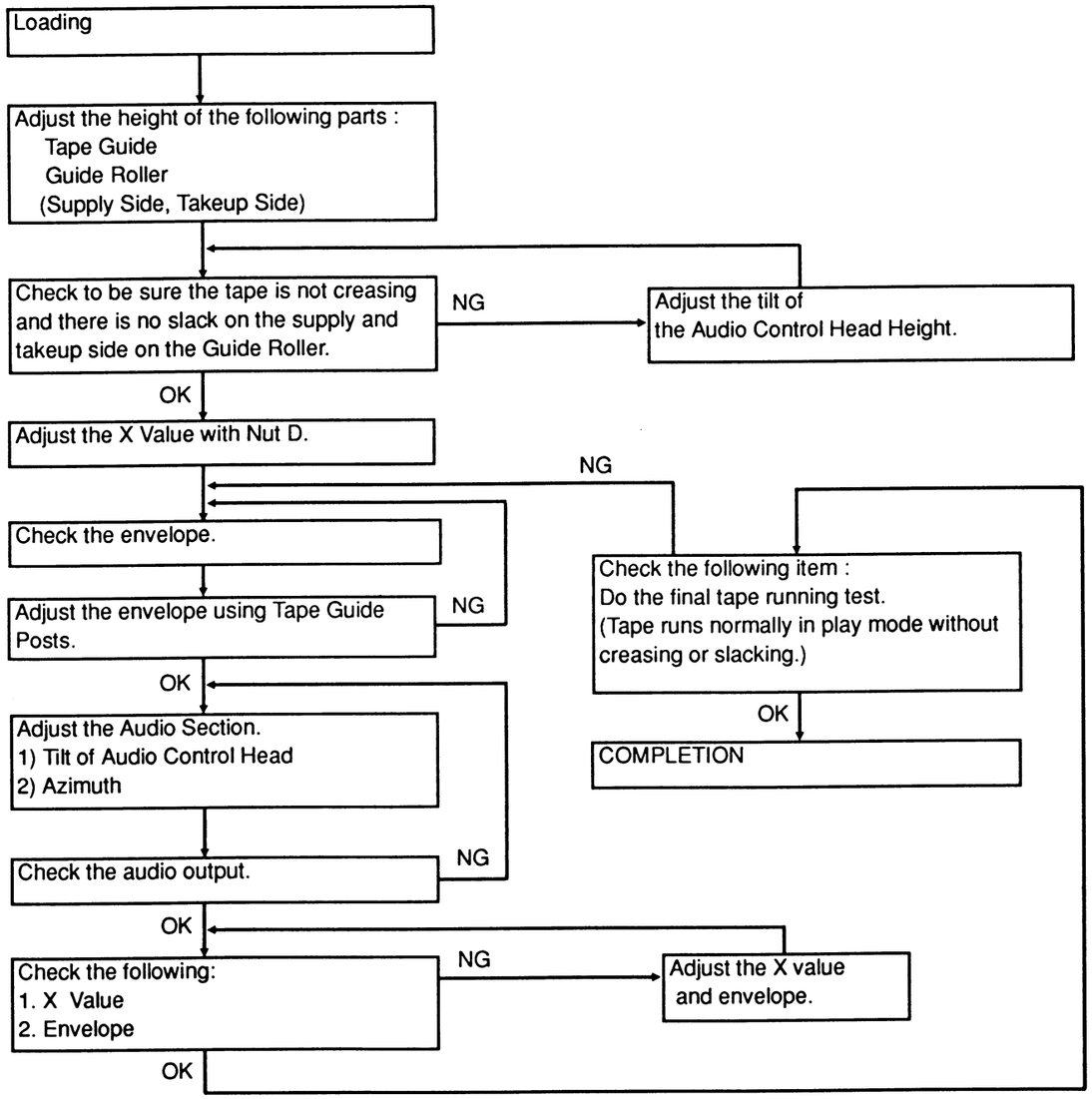

1-A. Preliminary Checking and Alignment of Tape Running

Purpose:

To make sure that the tape running is well stabilized.

Symptom of Misalignment:

If the tape runs with unstability, the tape will be damaged.

1. Play back a cassette tape and check that the tape runs without creasing at Guide Rollers [2] and [3], and at points A and B on the lead surface. (Refer to Fig M3 and M4)
2. If creasing is apparent, align the height of the guide rollers by turning the top of Guide Rollers [2] and [3] with a Post Adjustment Screwdriver. (Refer to Fig. M3 and M5)
   Note: Before turning the Guide Rollers, loosen the Lock Screw using a lock screwdriver.

Note: Do not use an Alignment Tape for this procedure. If the unit is not correctly aligned, the tape may be damaged.

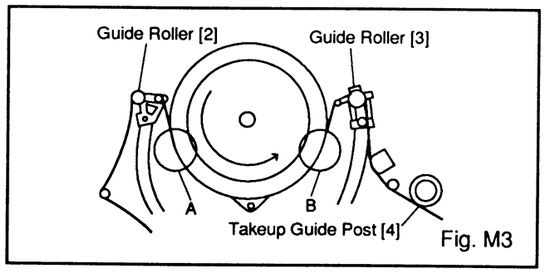

Fig. M3

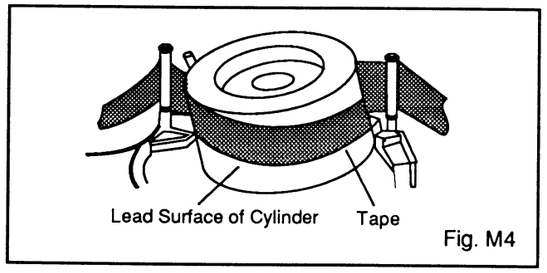

Fig. M4

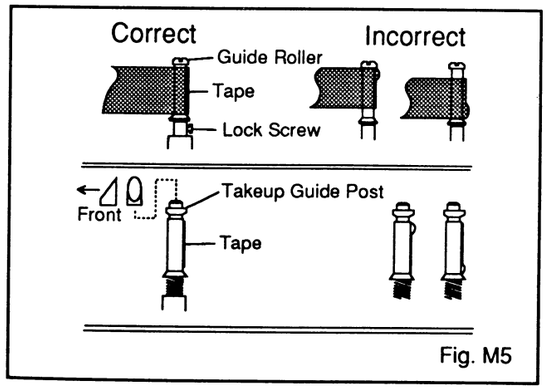

Fig. M5

1-B. Preliminary Checking of Audio/ Control Head Height

Purpose :

To make sure that the tape runs properly along the Control Head.

Symptom of Misalignment:

If the control signal is not properly picked up, proper Servo Operation cannot be achieved.

The head height adjustment is required when the Audio/Control Head is replaced.
For final alignment, do the adjustments described in 1-C and 1-D.

Note: Play back a cassette tape. Looking at the lower edge of the Control Head with the tape in motion, make sure that the lower edge of the tape runs 0.15~0.25mm above the lower edge of the Control Head. If it does not run properly, turn Height Adjustment Nut [A] slightly in either direction as necessary to correct it. Turn clockwise, as viewed from the top, to lower the head and counterclockwise to raise it. (Refer to Fig. M6 and M7.)

1-C. Preliminary Checking of Tilt of Audio/Control Head

Purpose:

To check that the tape running is well stabilized. In particular, check that the signals on the tape are properly picked up by the Audio Head at the upper part and by the Control Head at the lower part.

Symptom of Misalignment:

If the tilt of the Audio/Control Head is poorly aligned, the tape will eventually be damaged.
Play back a cassette tape and check that there is no tape slack between Takeup Guide Post [4] in Fig. M3 and the Audio/Control Head. If there is any slack, align the Audio/Control Head by turning tilt adjustment screw [C] in Fig. M6 so that the tape has no slack.

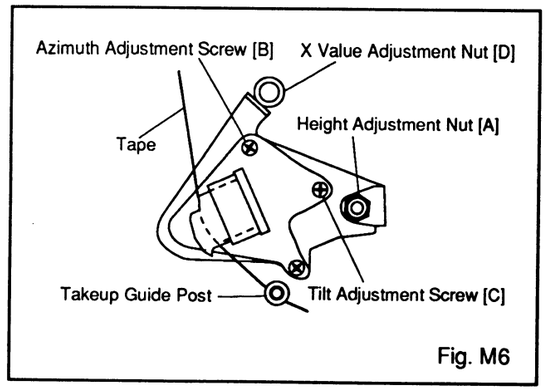

Fig. M6

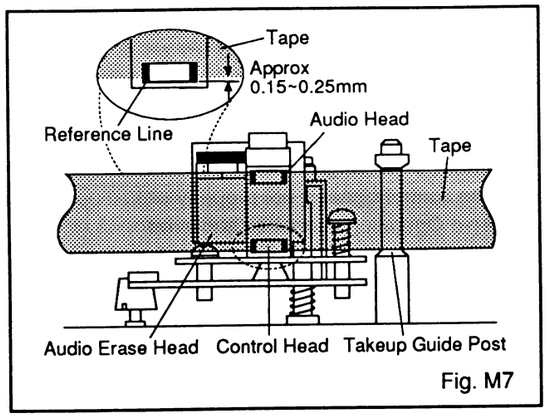

Fig. M7

1-D. Final Alignment of Audio/ Control Head Height

Purpose:

To align the position and height of the Audio/Control Head so that it meets the tape tracks properly.

Symptom of Misalignment:

If the position of the Audio/Control Head is not properly aligned, the Audio S/N Ratio or Frequency Response will be poor.

1. Connect the oscilloscope to the audio output jack on the rear side of the deck.
2. Check that there is no tape slack between the Takeup Guide Roller and the Audio/Control Head. If there is any tape slack, remove it by turning Tilt Adjustment screw [C]. Then realign the height of the Guide Rollers (Refer to 1-A).
3. Play back the Color Bar (1kHz, Audio) on the alignment tape (F6-A) and check that the audio signal output level is 1kHz. Finally, adjust Height Adjustment Nut [A] so that the output level is at maximum.(Fig. M6, Fig. M8[b])
4. Adjust Azimuth Adjustment Nut [B] so that the output level on the AC Voltmeter is at maximum.(Fig. M6)

Note: Secure screw [C] with lock paint after realignment.

Azimuth Alignment of Audio/Control Head

Purpose:

To correct the Azimuth alignment so that the Audio/Control Head angle meets tape tracks properly.

Symptom of Misalignment:

If the position of the Audio/Control Head is not properly aligned, the Audio S/N Ratio or Frequency Response will be poor.

1. Connect the oscilloscope to the audio output jack on the rear side of the deck.
2. Play back the Gray Scale (6kHz, audio) on the alignment tape (F6-N), and adjust Height Adjustment Nut [A] so that the output level on the AC Voltmeter or the waveform of the oscilloscope is at maximum. (Fig. M6, Fig. M8[a])

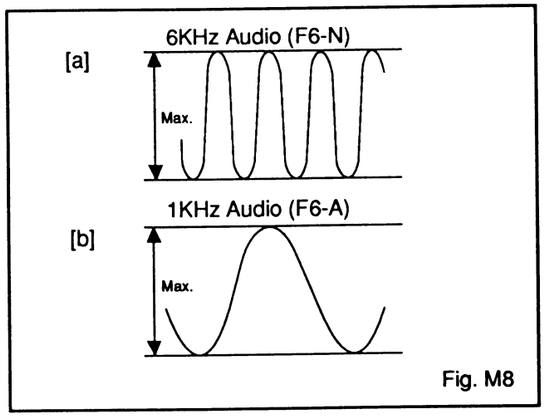

Fig. M8

1-E. X Value Alignment

Purpose:

To align the Horizontal Position of the Audio/Control Head.

Symptom of Misalignment:

If the Horizontal Position of the Audio/Control Head is not properly aligned, maximum envelope cannot be obtained at the Neutral mode of the Tracking Control Circuit.

1. Set the Tracking Control Circuit to the Neutral mode by pressing CH UP and DOWN buttons on VCR simultaneously.
2. Connect the oscilloscope to TP of C-PB on the Main CBA. Use TP of RF-SW as a trigger.
3. Play back the Gray Scale of the Alignment Tape (F6-N) and confirm that the PB FM signal is present.
4. Adjust X Value adjustment Nut [D] with the X Position Adj-Fixture so that the PB FM signal at the TP of C-PB or at the TP of A-OUT is maximum. (Fig.M9)

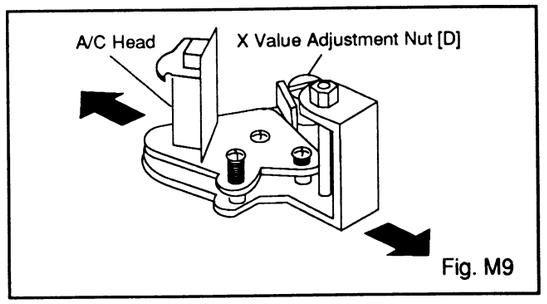

Fig. M9

1-F. Final Checking/Adjustment of Envelope Waveform

Purpose:

To achieve a satisfactory picture and precise tracking.

Symptom of Misalignment:

If the envelope output is poor, noise will appear in the picture. The tracking will then lose precision and the playback picture will be distorted by any slight variation of the Tracking Control.

1. Set the Tracking Control Circuit to the Neutral mode by pressing both CH UP and DOWN buttons on VCR simultaneously.
2. Connect the oscilloscope to TP of C-PB on the Main CBA. Use TP of RF-SW as a trigger.
3. Play back the Gray Scale on the Alignment Tape (F6-N). Adjust the height of Guide Rollers [2] and [3] (Fig.M3) watching the oscilloscope display so that the envelope becomes as flat as possibile. If adjustment is required, turn the top of the Guide Roller with the Post Adjustment Screwdriver.
4. When the envelope is as shown in Fig. M10, adjust the height of Guide Roller [2] (Refer to Fig.M3) so that the waveform looks like the one shown in Fig. M12.
5. When the envelope is as shown in Fig. M11, adjust the height of Guide Roller [3] (Refer to Fig.M3) so that the waveform looks like the one shown in Fig. M12.
6. When Guide Rollers [2] and [3] (Refer to Fig.M3) are aligned properly, there is no envelope drop either at the beginning or end of track as shown in Fig. M12.

Note: Upon completion of the adjustment of Guide Rollers [2] and [3] (Refer to Fig.M3), tighten the Lock Screws on these Guide Rollers [2] and [3], using a lock screw wrench. Then check the X VALUE by pushing the Tracking Control Up or Down buttons alternately, to check the symmetry of the envelope. If required, redo the "X VALUE ALIGNMENT." Secure screw [C] shown in Fig.M6 with lock paint.

Dropping envelope level at the beginning of track.

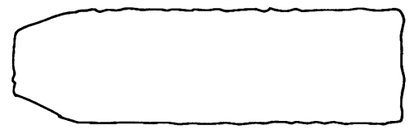
Fig. M10

Dropping envelope level at the end of track.


Fig. M11

Envelope is adjusted properly. (No envelope drop)

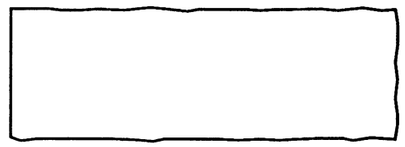
Fig. M12

DISASSEMBLY/ASSEMBLY PROCEDURES OF DECK MECHANISM

Main Mechanism

This procedure starts with the condition that the Cabinet Parts and Front Loading Assembly have been removed. (Refer to the Cabinet Disassembly Instructions of Section 1.) Also, all the following procedures for adjustment and parts replacement should be done in Stop mode. When reassembling, follow the steps in reverse order.

STEP /LOC. NO.	START -ING NO.	PART		REMOVAL		INSTALLATION
				FIG. NO.	REMOVE/*UNHOOK/ UNLOCK/RELEASE/ UNPLUG/DESOLDER	ADJUSTMENT CONDITION
[1]	[1]	Motor Holder Assembly	T	DM1 DM4 DM5	3(S-1), (P-7) Loading Belt	(+)
[2]	[1]	Loading Motor Assembly	T	DM1 MD3 DM4	2(S-2), CN2902	
[3]	[1]	Cassette Drive Lever Assembly	T	DM1 DM4		(+)
[4]	[1]	Pinch Roller Arm Assembly	T	DM1 DM4	(C-1) Pinch Roller Spring	
[5]	[1]	Pinch Arm Assembly	T	DM1 DM4		
[6]	[1]	Cam	T	DM1 DM4		(+) See Fig. DM4
[7]	[1]	Pulley Assembly	T	DM1 DM5	Loading Belt (W-1)	(+)
[8]	[8]	Joint CBA	T/B	DM1 DM2 DM3 DM6 DM7	(S-3), CN2801, CN2902, CL2902, CL2901	For Connecting, Refer to Connectors' Points
[9]	[9]	Head Amp CBA	T/B	DM1 DM2 DM3 DM7	(S-4), (S-14) CN02, CN03, CL02	For Connecting, Refer to Connectors' Points.
[10]	[8]	Mode SW CBA	B	DM2 DM7	*(L-1)	
[11]	[11]	Arm Idler Assembly	T	DM1 DM8	Clutch Bushing	
[12]	[12]	Clutch Assembly	B	DM2 DM8	(C-2), (W-2) Capstan Belt	
[13]	[9]	Capstan Motor Unit	B	DM2 DM9	3(S-5)	
[14]	[1]	M Lever Holder	T	DM1 DM10	(S-6)	
[15]	[1]	Kick Arm Holder	B	DM2 DM10		
[16]	[15]	Kick Arm	B	DM2 DM10	Bushing	
[17]	[17]	Mode Change Lever	T	DM1 DM11	*2(L-2)	(+)
[18]	[1]	Main Lever Assembly	T	DM1 DM12	*(L-3)	
[19]	[19]	Tape Guide Assembly	T	DM1 DM12	*(P-1), *(L-4)	See Fig. DM12
[20]	[20]	A/C Head Assembly	T	DM1 DM13	Nylon Nut, Head Height Adjustment Spring	See Fig. DM13
[21]	[21]	Tension Lever Sub Assembly	T	DM1 DM14	*(L-5)	
[22]	[21]	Band Brake Sub Assembly	T	DM1 DM14	(S-7), *(L-6)	
[23]	[17]	M Brake (S)	T	DM1 DM15	*(P-2), *(L-7)	When reassembling, hook the Spring after installation of Mode Change Lever.

STEP /LOC. NO.	START -ING NO.	PART		REMOVAL		INSTALLATION
				FIG. NO.	REMOVE/*UNHOOK/ UNLOCK/RELEASE/ UNPLUG/DESOLDER	ADJUSTMENT CONDITION
[24]	[17]	M Brake (S) Lever	T	DM1 DM15		
[25]	[17]	S Brake Arm	T	DM1 DM15	*(P-3)	When reassembling, hook the Spring after installation of Mode Change Lever.
[26]	[9]	M Brake (T) Assembly	T	DM1 DM15		
[27]	[17]	T Brake Arm Assembly	T	DM1 DM15	*(P-4)	When reassembling, hook the Spring after installation of Mode Change Lever
[28]	[17]	Reel Base Assemblies (S+T)	T	DM1 DM16	2 Poly Slider Washers	
*[29]	[29]	Earth Brush Assembly	B	DM2 DM17 DM18	(S-8)	When reassembling, check that the brush is within 1 mm of center of shaft.
[30]	[9]	Cylinder Drum Assembly	T	DM1 DM17	3(S-9)	
[31]	[1]	Moving Guide Assembly	T	DM1 DM19		(+)
[32]	[1]	Moving Guide T Assembly	T	DM1 DM19		(+)
[33]	[33]	FE Head	T	DM1 DM19	(S-10)	
[34]	[34]	Main Prism	T	DM1 DM19	(S-11)	
[35]	[1]	Loading Arm M Assembly	B	DM2 DM20	(C-3)	(+)When installing, match the marks.
[36]	[1]	Loading Gear A	B	DM2 DM20		(+)
[37]	[1]	Loading Gear B	B	DM2 DM20		(+)
[38]	[38]	Rec Arm	B	DM2 DM21	(S-12),*(P-5)	
[39]	[38]	BT Drive Arm	B	DM2 DM21	(S-13), (P-6)	
*[40]	[40]	Cleaning Head	T	DM1	(C-4)	

① ② ③ ④ ⑤ ⑥ ⑦

①: Order of steps in Procedure. When reassembling, follow the steps in reverse order. These numbers are also used as the identification (Location) No. of parts in Figures.

②: The start No. followed by corresponding part to be removed at this stage. For example, Arm Idler Assembly [11] can be removed without removing any other parts. But BT Drive Arm [39] can be removed only after removing Rec Arm [38].

③: Parts to be removed or installed.

④: Location of part; T=Top, B=Bottom, R=Right, L=Left

⑤: Fig. No. shows Procedure or Part Location

⑥: Identification of part to be removed, unhooked, unlocked, released, unplugged, unclamped or desoldered. S=Screw, W=Washer, C=Cut Washer, P=Spring, *=Unhook/Unlock/Release/Unplug/Desolder 2(C-2) = two Cut Washers(C-2), 2(L-2) = two Locking Tabs(L-2)

⑦: Adjustment Information for Installation (+): Refer to Deck Exploded Views for lubrication information.

NOTE: Cylinder Drum Assembly with CBA. (Upper side of Cylinder Drum Assembly) --------- Type A
Cylinder Drum Assembly with CBA. (Lower side of Cylinder Drum Assembly) --------- Type B
*[29] ----- Type A (N2116XA) only.
*[40] ----- For Head Cleaner models only

Top View

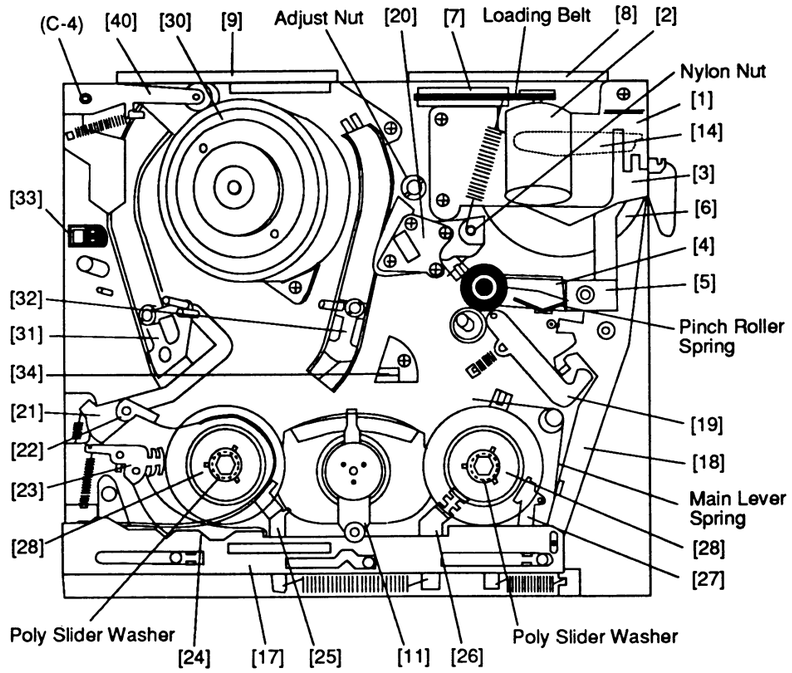

Fig. DM1

Bottom View

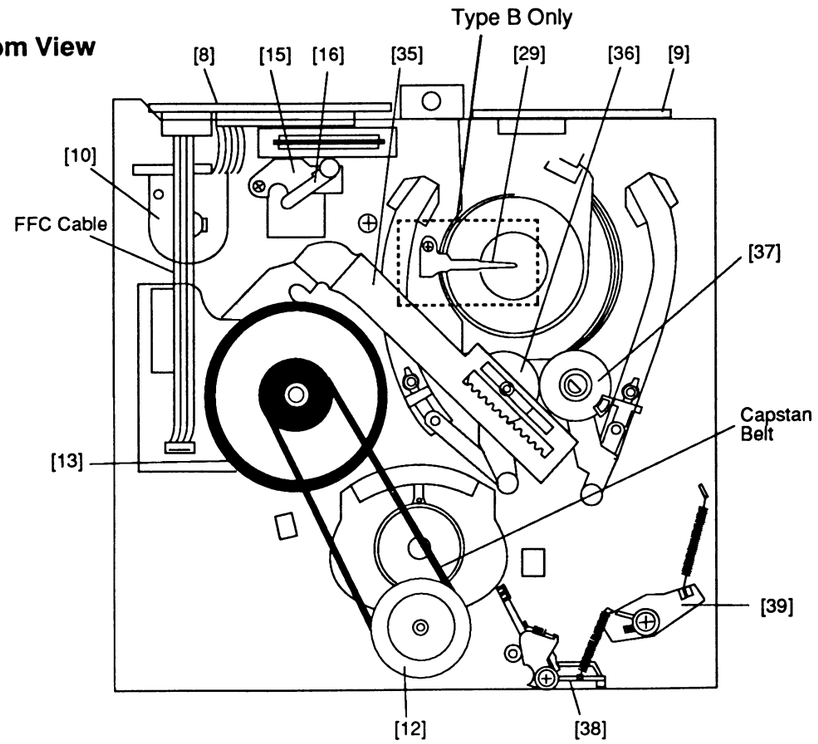

Fig. DM2

Deck Connectors

Note: Disconnect Connectors shown below before disassembling the Deck.

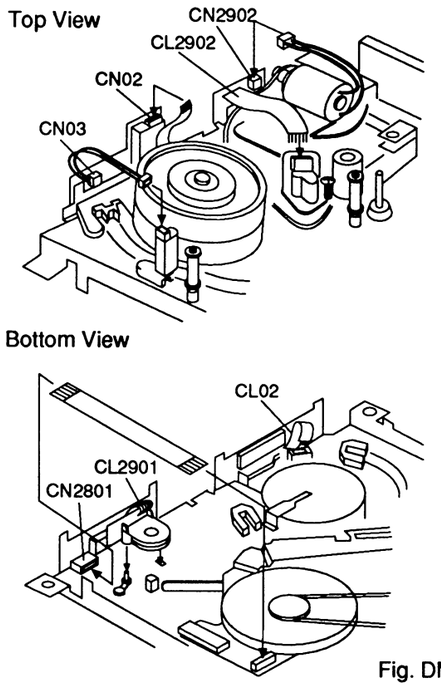

Fig. DM3

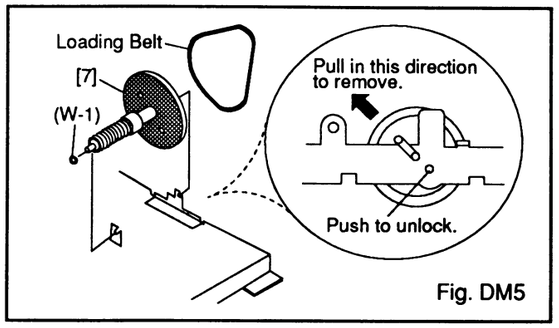

Fig. DM5

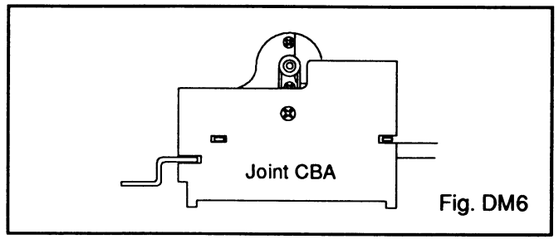

Fig. DM6

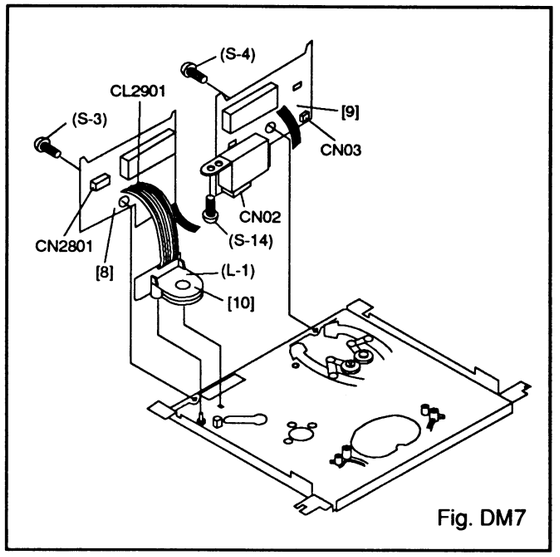

Fig. DM7

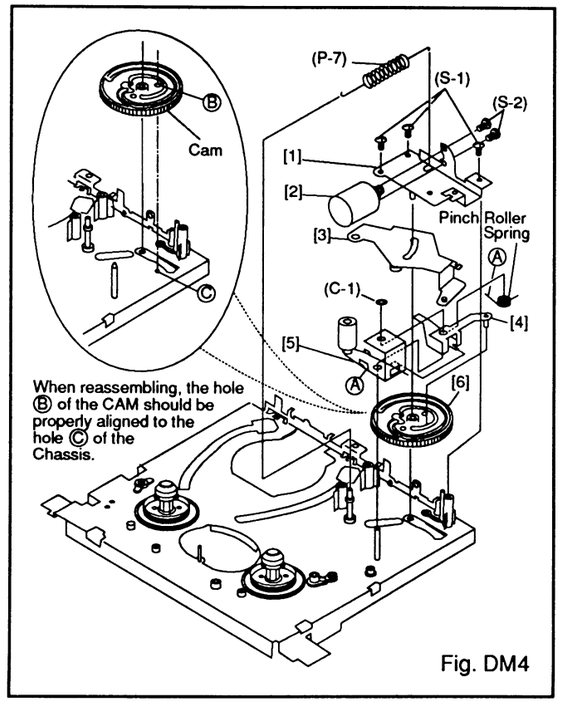

Fig. DM4

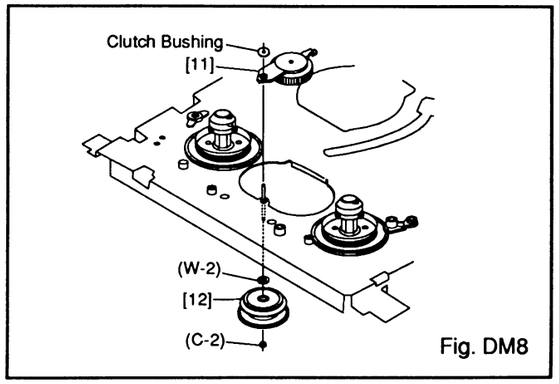

Fig. DM8

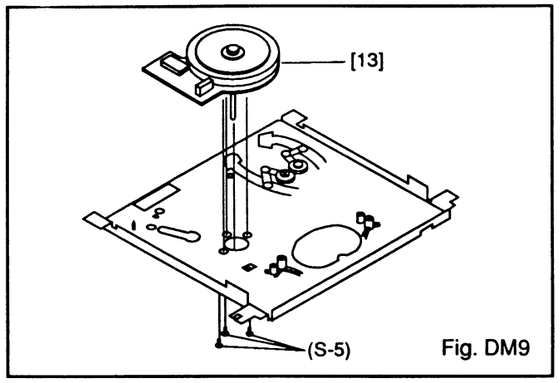

Fig. DM9

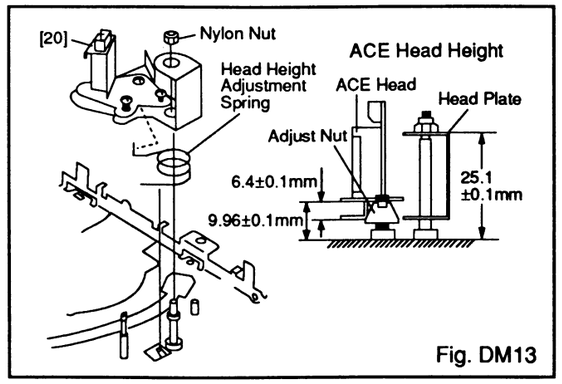

Fig. DM13

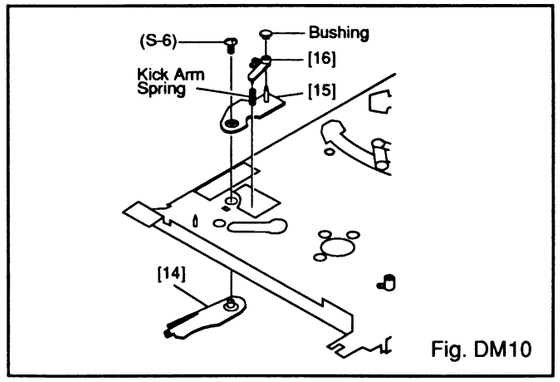

Fig. DM10

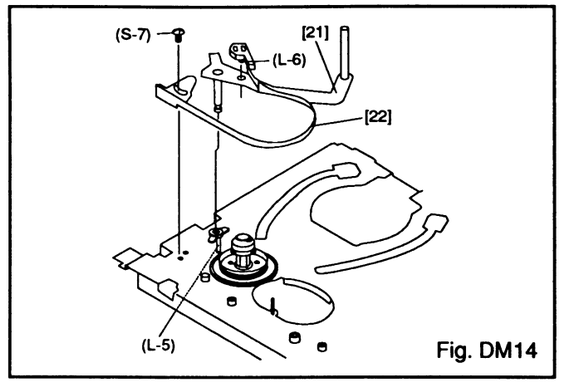

Fig. DM14

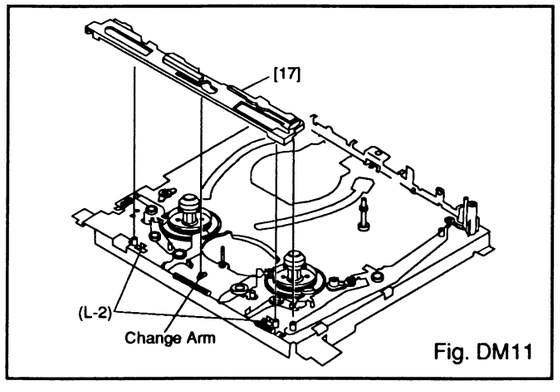

Fig. DM11

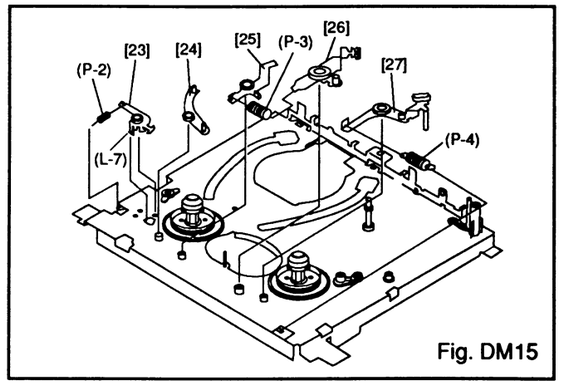

Fig. DM15

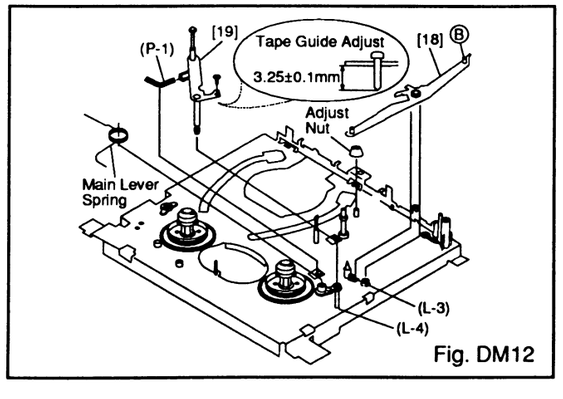

Fig. DM12

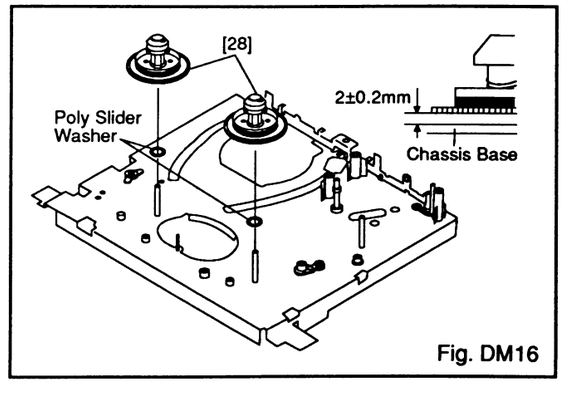

Fig. DM16

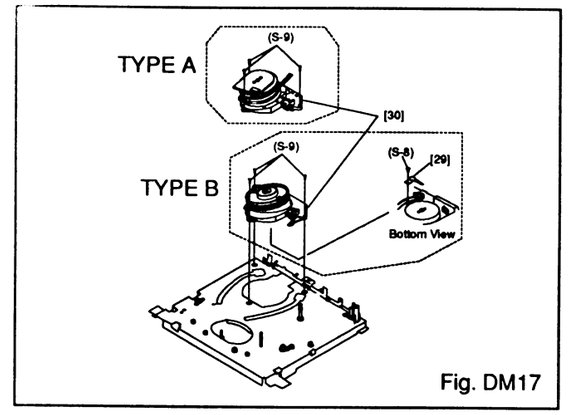

Fig. DM17

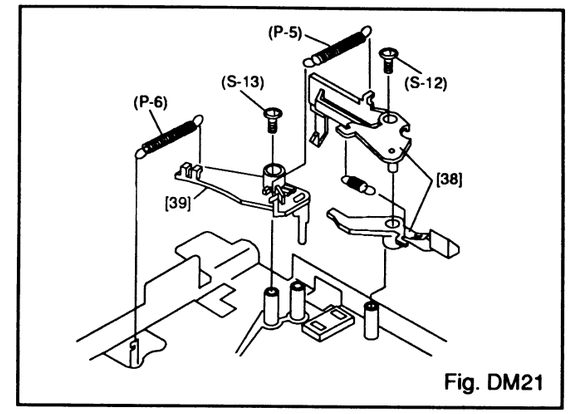

Fig. DM21

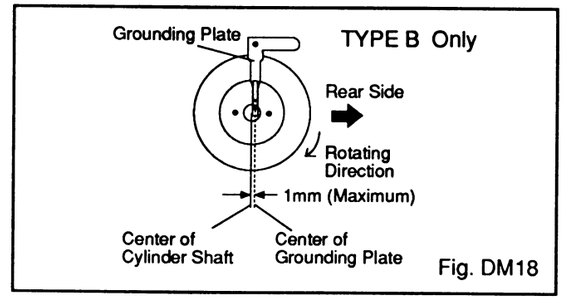

Fig. DM18

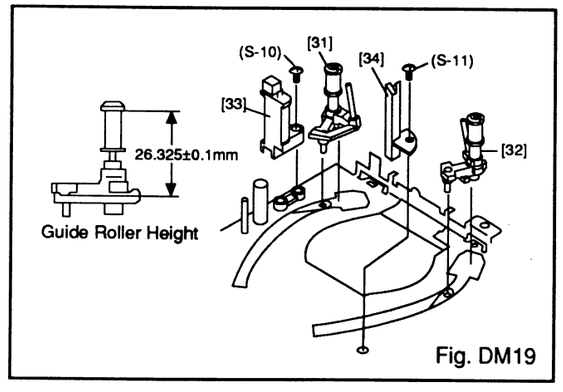

Fig. DM19

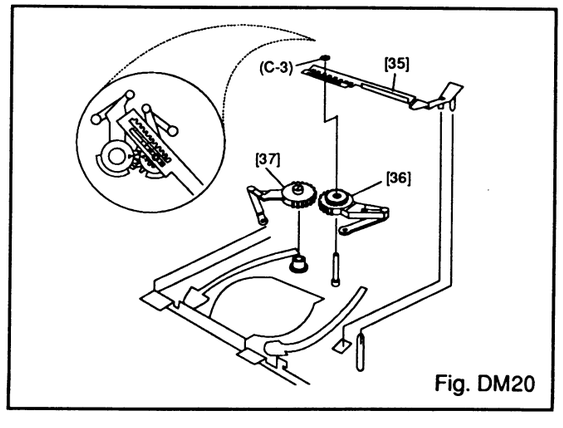

Fig. DM20

Front Loading Assembly

This procedure starts with the condition that the Front Loading Assembly has been removed from the chassis. When reassembling, follow the steps in reverse order.

STEP /LOC. NO.	START -ING NO.	PART		REMOVAL		INSTALLATION
				FIG. NO.	REMOVE *UNHOOK/ UNLOCK/RELEASE/ UNPLUG/DESOLDER	ADJUSTMENT CONDITION
[1]	[1]	Drive Gear Reinforcement	R	DM22	(S-1)	
[2]	[1]	Cassette Drive Gear (R)	R	DM22	*(L-1)	Refer to the setting condition in Fig. DM22.
[3]	[3]	Prism (R)	R	DM22	*2(L-2)	
[4]	[4]	Door Opener	R	DM22	Door Opener Spring	When installing the Door Opener Spring, refer to the setting condition in Fig. DM22.
[5]	[1]	Rack Assembly	R	DM22		
[6]	[6]	Cassette Drive Gear (L)	L	DM23	*(L-3)	When installing, refer to the setting condition in Fig. DM23.
[7]	[7]	Prism (L)	L	DM23	*2(L-4)	
[8]	[8]	Cassette Holder Plate	T	DM24	*2(L-5)	
①	②	③	④	⑤	⑥	⑦

①: Order of steps in Procedure. When reassembling, follow the steps in reverse order.
These numbers are also used as the identification (Location) No. of parts in Figures.

②: The start No. followed by corresponding part to be removed at this stage. For example, Prism (R) [3] can be removed without removing any other parts. But Cassette Drive Gear (R) [2] can be removed only after removing Drive Gear Reinforcement [1].

③: Parts to be removed or installed.

④: Location of part; T=Top, B=Bottom, R=Right, L=Left

⑤: Fig. No. shows Procedure or Part Location

⑥: Identification of part to be removed, unhooked, unlocked, released, unplugged, unclamped, or desoldered.
P=Spring, W=Washer, C=Cut Washer, S=Screw, *=Unhook/Unlock/Release/Unplug/Desolder
2(C-2) = 2 Cut Washer(C-2), 2(L-2) = 2 Locking Clips(L-2), (N-1) = 1 Locking Pin(N-1)

⑦: Adjustment Information for Installation (+): Refer to Deck Exploded Views for lubrication information.

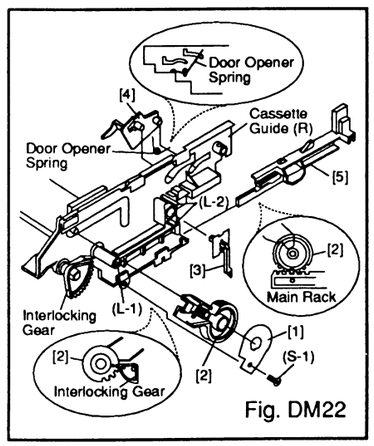

Fig. DM22

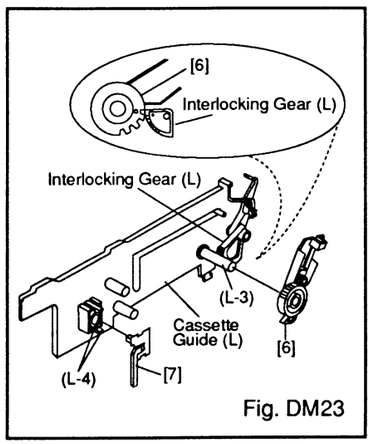

Fig. DM23

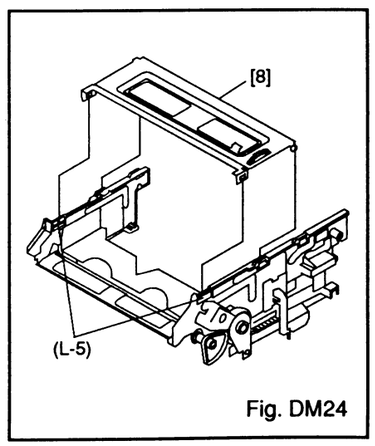

Fig. DM24

U7DA2H-3

ACE Head CBA Top View (MODELS: A, B, C, D, F)

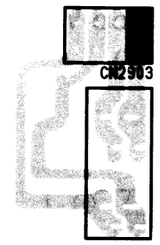

BK4050F01002-3

Mode SW CBA Top View (MODELS: A, B, C, D, F)

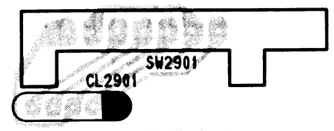

BK4050F01002-3

Joint CBA Top View (MODELS: A, B, C, D, F)

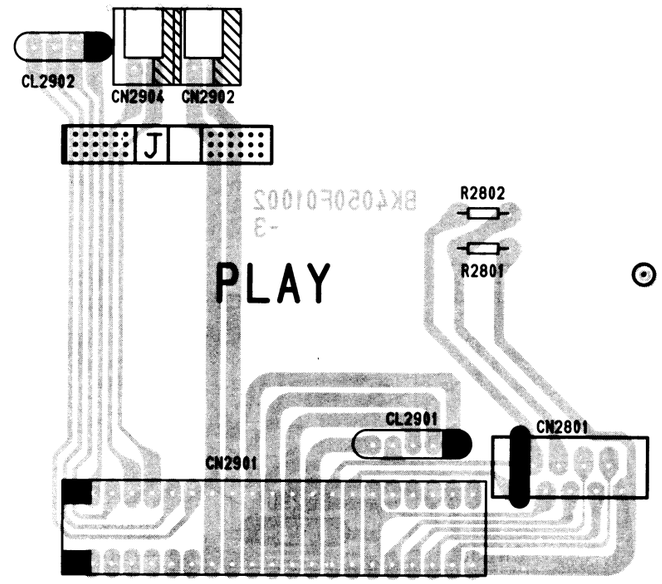

BK4050F01002-3

ACE Head CBA Top View (MODEL: E)

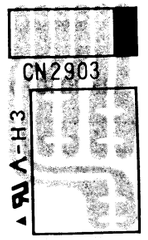

BK7010F01002C

Mode SW CBA Top View (MODEL: E)

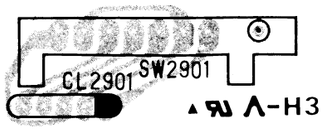

BK7010F01002B

Joint CBA Top View (MODEL: E)

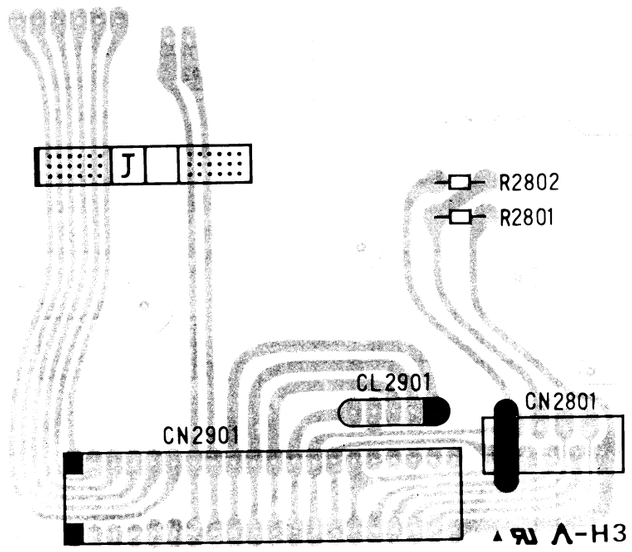

BK7010F01002A

DECK EXPLODED VIEWS

TYPE: B {(Cylinder Drum Assembly with CBA. (Lower Side of Cylinder Drum Assembly)}

View 1

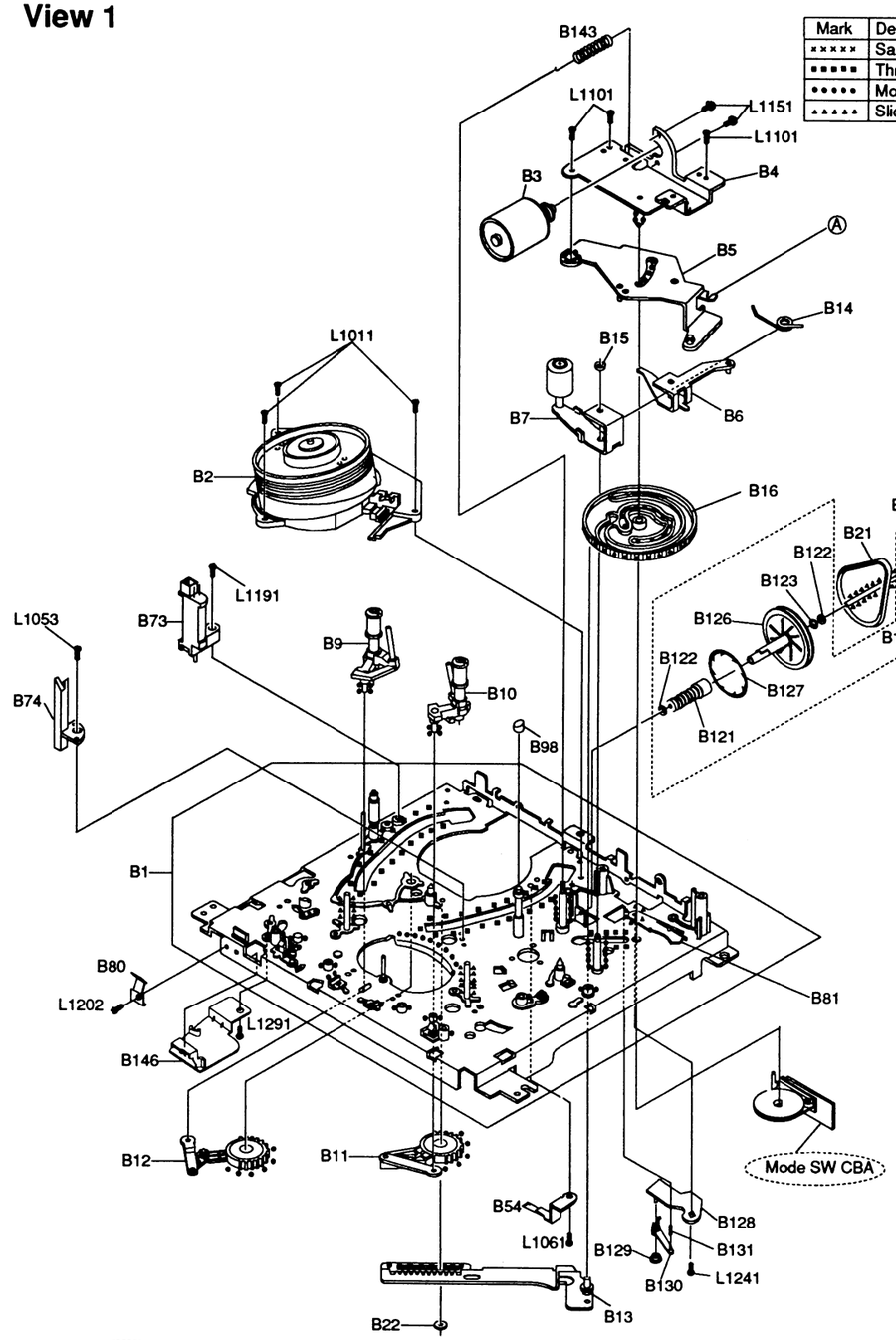

Mark	Description	Part No.
××××××	Sankohl	0VZZ00062
■■■■■■	Three Bond	0VZZ00063
●●●●●●	Molycoat	0VZZ00064
▲▲▲▲▲▲	Slidus Oil	0VZZ00065

See the Deck Electrical Parts List.

TYPE: A {{ Cylinder Drum Assembly with CBA. (Upper Side of Cylinder Drum Assembly)}

View 1

NOTE: Disconnect Connectors shown below before disassembling the Head Amp CBA.

Mark	Description	Part No.
××××××	Sankohl	0VZZ00062
■■■■■■	Three Bond	0VZZ00063
●●●●●●	Molycoat	0VZZ00064
▲▲▲▲▲▲	Slidus Oil	0VZZ00065

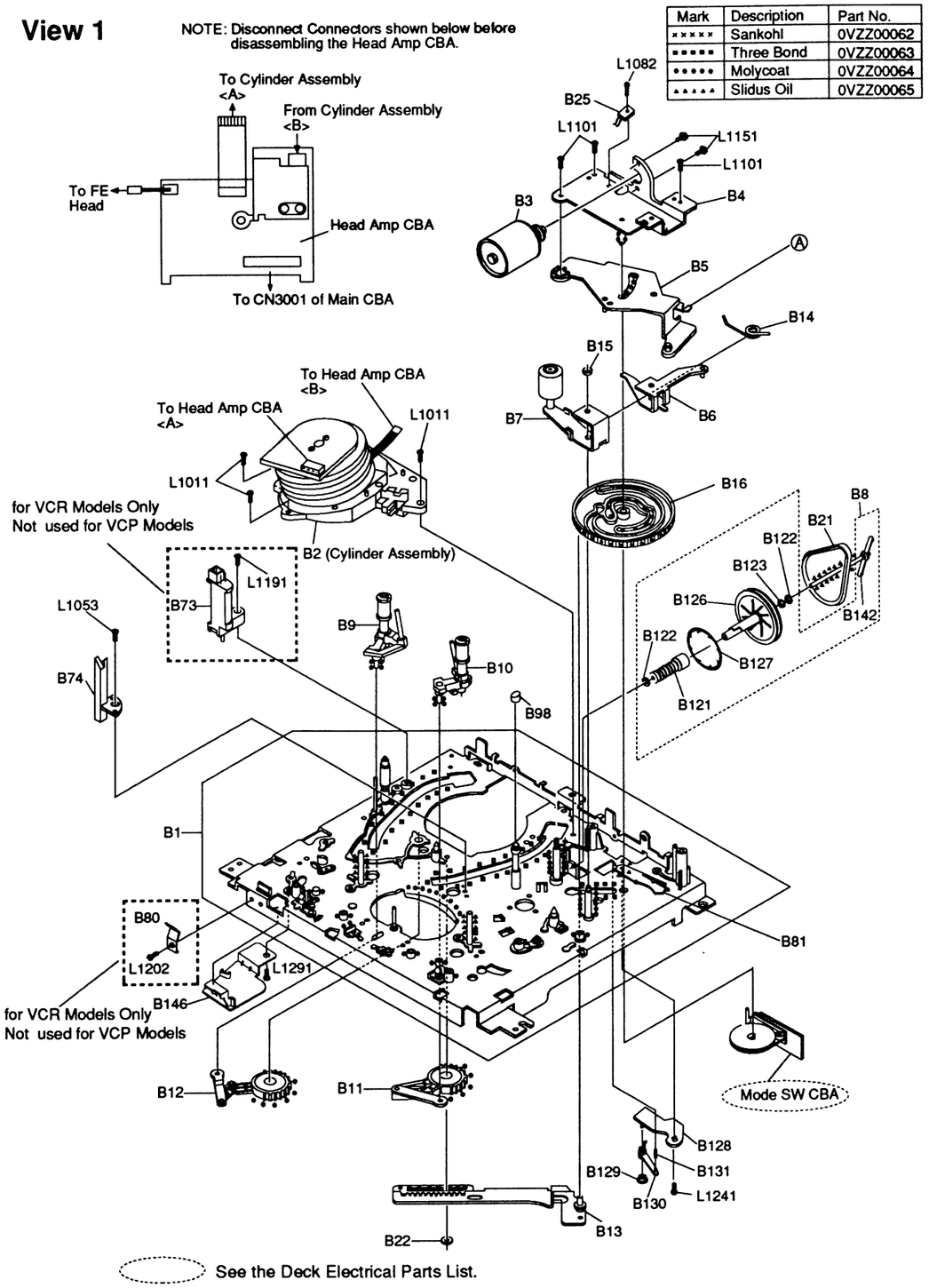

See the Deck Electrical Parts List.

MODEL: A, B, C, D, F

View 2

Mark	Description	Part No.
××××××	Sankohl	0VZZ00062
■■■■■■	Three Bond	0VZZ00063
●●●●●●	Molycoat	0VZZ00064
▲▲▲▲▲▲	Slidus Oil	0VZZ00065

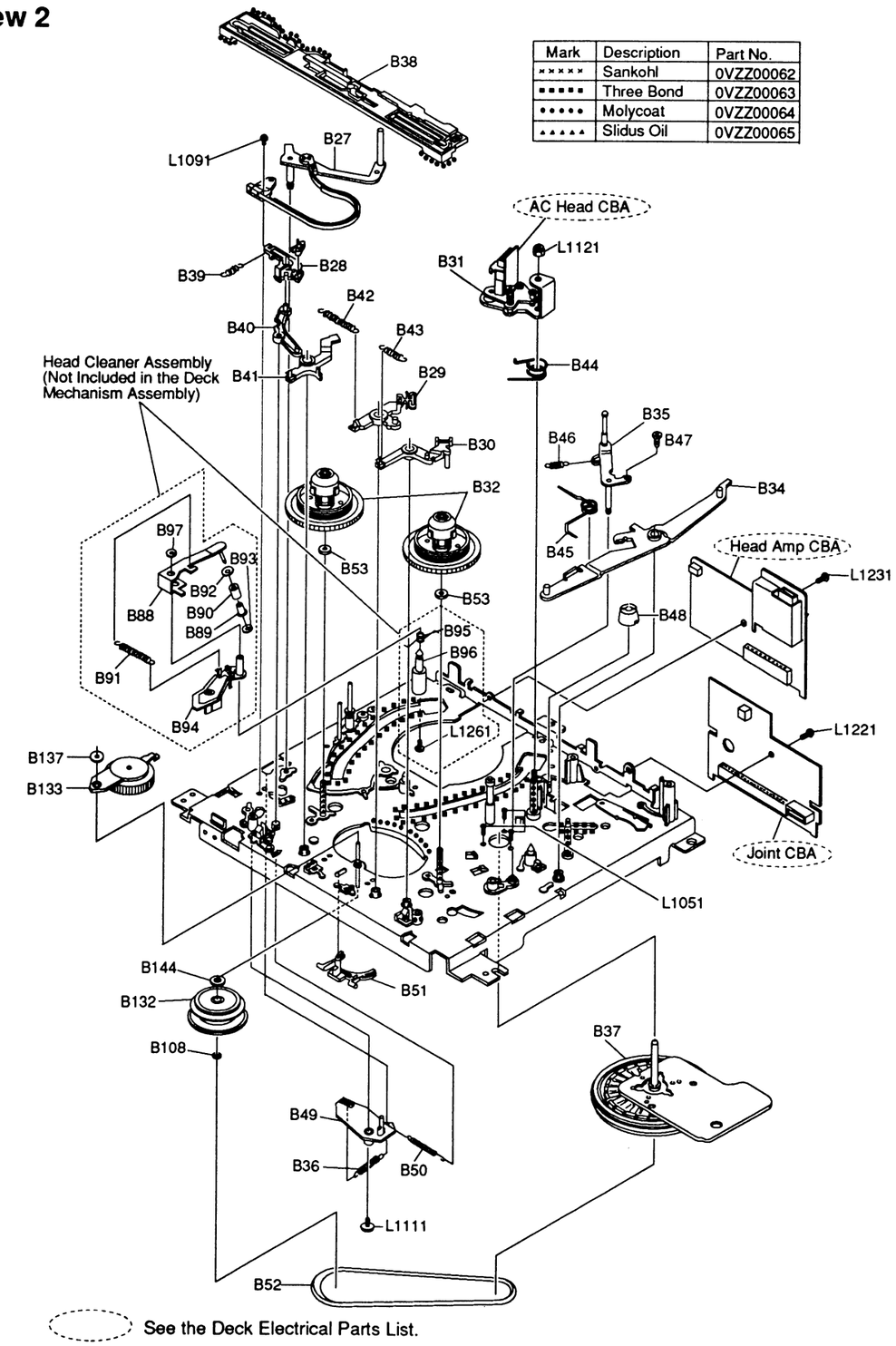

See the Deck Electrical Parts List.

MODEL: E

View 2

Mark	Description	Part No.
××××××	Sankohl	0VZZ00062
■■■■■■	Three Bond	0VZZ00063
●●●●●●	Molycoat	0VZZ00064
▲▲▲▲▲▲	Slidus Oil	0VZZ00065

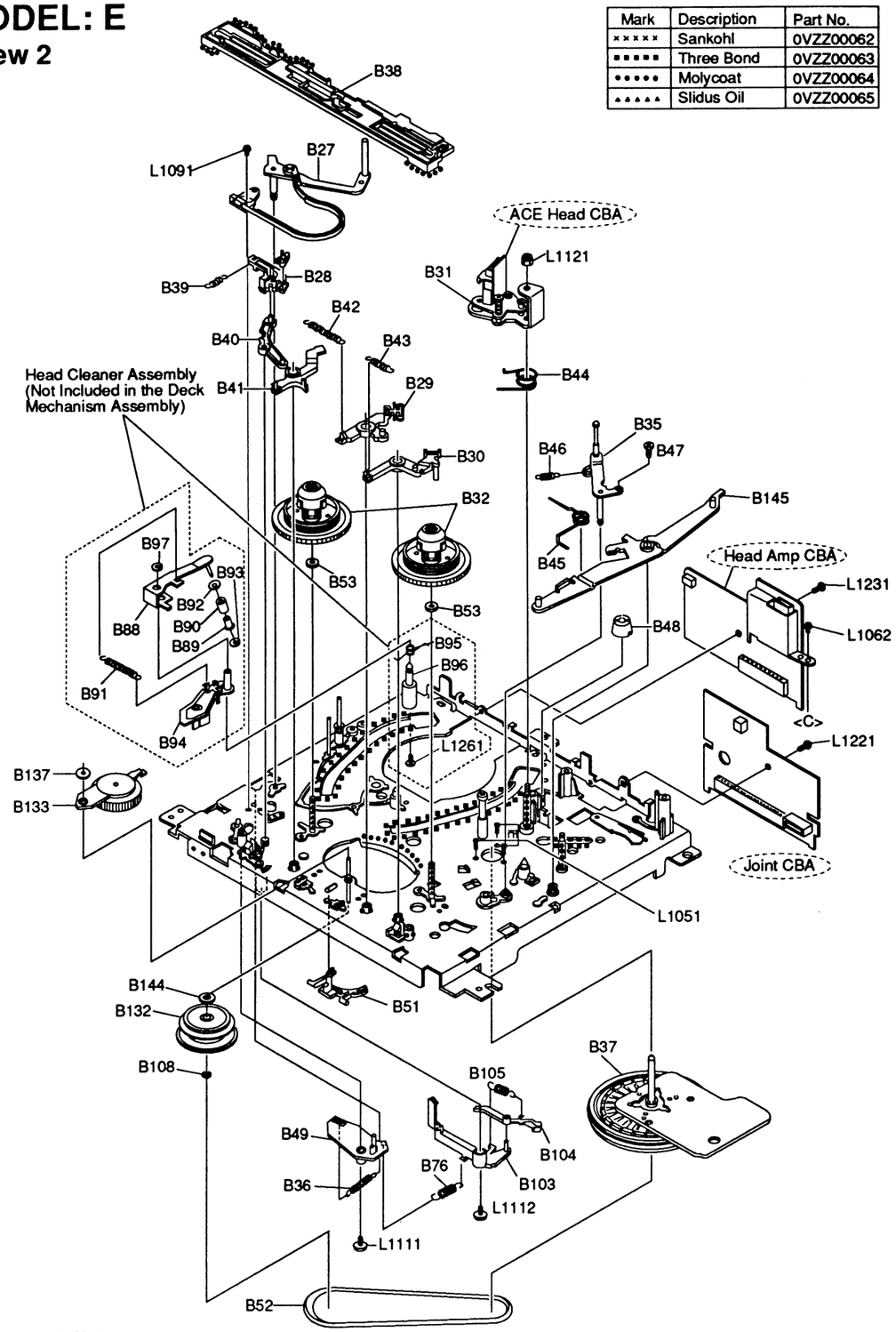

See the Deck Electrical Parts List.

View 3

Mark	Description	Part No.
××××××	Sankohl	0VZZ00062
■■■■■■	Three Bond	0VZZ00063
●●●●●●	Molycoat	0VZZ00064
▲▲▲▲▲▲	Slidus Oil	0VZZ00065

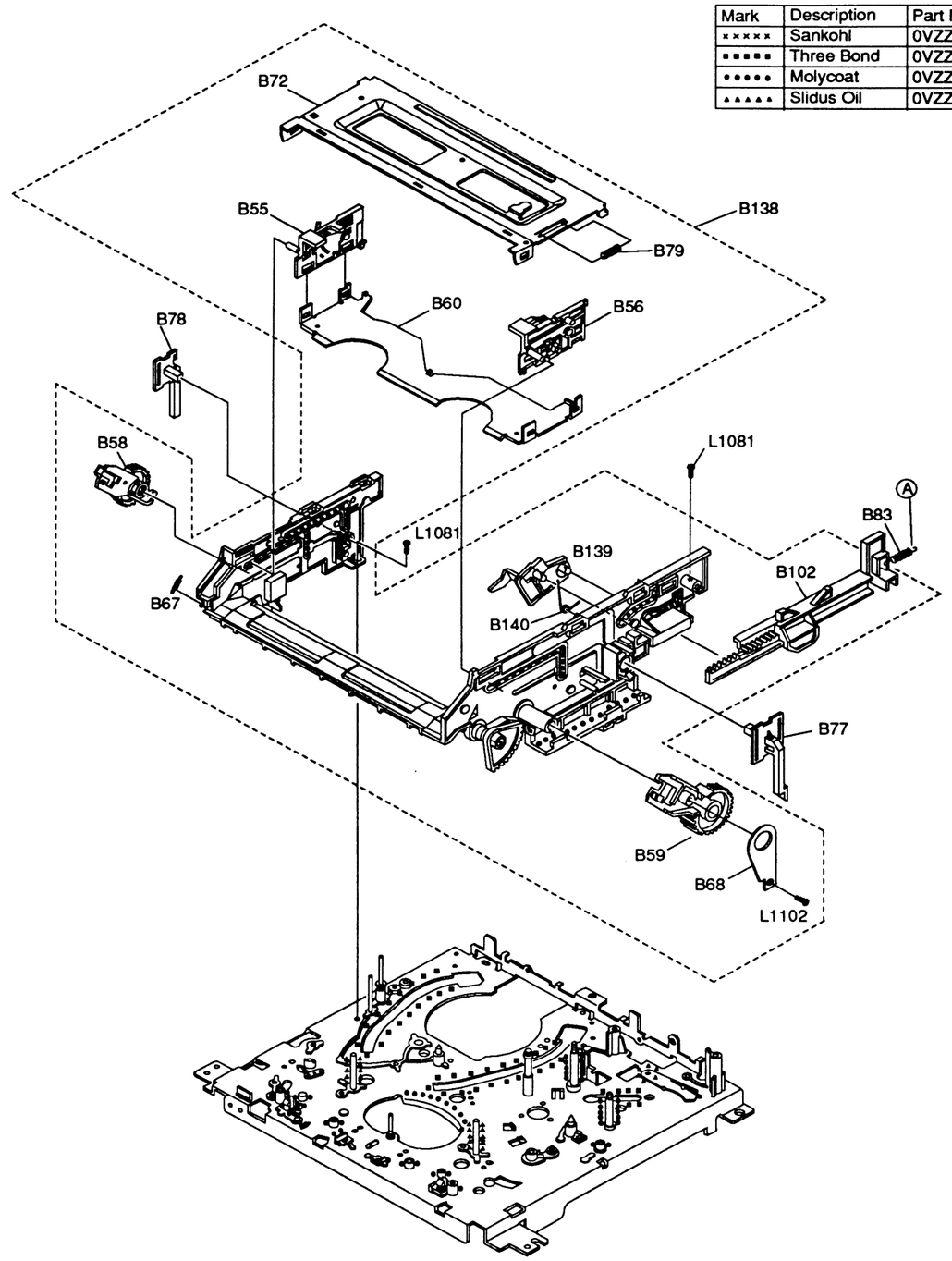

DECK MECHANICAL PARTS LIST (MODEL : A, B, C, D, F)
(TYPE : A)

Ref. No.	Description	Part No.
B 1	CHASSIS ASSEMBLY	0VSA05627
B 2	CYLINDER DRUM ASSEMBLY	0VM301585
B 3	LOADING MOTOR ASSEMBLY	0VSA04781
B 4	MOTOR HOLDER CALKING ASSEMBLY	0VM403364
B 5	CASSETTE DRIVE LEVER ASSEMBLY	0VM403507I
B 6	PINCH ROLLER ARM ASSEMBLY	0VSA05848
B 7	PINCH ARM ASSEMBLY or	0VM402387
	PINCH ARM ASSEMBLY	0VSA05924
B 8	PULLEY ASSEMBLY	0VSA05505
B 9	MOVING GUIDE S ASSEMBLY	0VSA05722
B 10	MOVING GUIDE T ASSEMBLY	0VSA05723
B 11	LOADING ARM T ASSEMBLY	0VSA05503
B 12	LOADING ARM B ASSEMBLY	0VSA04215
B 13	LOADING ARM M ASSEMBLY	0VM404693
B 14	PINCH ROLLER SP	0VM403949
B 15	LUMIRROR WASHER 3.1X6X0.35	0VM403269
B 16	CAM	0VM100453
B 21	LOADING BELT or	0VM403432
	LOADING BELT	0VM403952
B 22	P.S.W(CUT)	0VM404679
B 25	DEW SENSOR or	PCZHUMZHH003
	DEW SENSOR EYHS-10R4	PCZHUMZMS004
B 27	BAND BRAKE ASSEMBLY	0VSA04658
B 28	MAIN BRAKE S ASSEMBLY	0VSA04212
B 29	MAIN BRAKE T ASSEMBLY	0VSA04213
B 30	T BRAKE ARM ASSEMBLY	0VSA04641
B 31	ACE HEAD ASSEMBLY	0VSA04204
B 32	REEL BASE ASSEMBLY	0VSA04759
B 34	MAIN LEVER ASSEMBLY	0VM402558
B 35	TAPE GUIDE ASSEMBLY	0VM402560
B 36	TENSION LEVER SP ASSEMBLY	0VSA04550
B 37	CAPSTAN MOTOR F2QKB92 or	MMDDB5ZSJ002
	CAPSTAN MOTOR DFX67B5VWA1	MMDCB12MS001
B 38	MODE CHANGE LEVER	0VM201234G
B 39	M BRAKE(S)SPRING	0VM402579
B 40	M BRAKE(S)LEVER	0VM300753
B 41	S BREAKE ARM	0VM301759
B 42	M BRAKE T ARM SPRING	0VM402582
B 43	T BRAKE SPRING	0VM402580
B 44	HEAD ADJUST SPRING	0VM402567A
B 45	M LEVER SPRING	0VM402570
B 46	TAPE GUIDE ARM SPRING	0VM402581
B 47	TAPE GUIDE ARM ADJUST SCREW	0VM403242
B 48	ADJUST NUT (B)	0VM404678A
B 49	BT DRIVE ARM	0VM300756K
B 50	B.T DRIVING ARM SPRING	0VM402960
B 51	CHANGE ARM	0VM402441E
B 52	CAPSTAN BELT or	0VM402397
	CAPSTAN BELT	0VM403950
B 53	P.S.W B	0VM402625
B 55	C.SLIDER L ASSEMBLY	0VSA04487
B 56	C.SLIDER R ASSEMBLY	0VSA04488
B 58	C.D. GEAR L ASSEMBLY	0VSA04494
B 59	C.D. GEAR R ASSEMBLY	0VSA04495

Ref. No.	Description	Part No.
B 60	CASSETTE PLATE A	0VM301932
B 67	FRONT DOOR OPENER SPRING	0VM403962
B 68	DRIVING GEAR REINFORCEMENT	0VM402961
B 72	UPPER PLATE	0VM201033
B 74	LUMINESCENCE PRISM(B)	0VM301764F
B 77	PRISM R	0VM301292
B 78	PRISM L	0VM301293D
B 79	EARTH SPRING	0VM403524E
B 81	M LEVER HOLDER	0VM301717
B 83	RACK SPRING	0VM403894
B 98	T,G CAP (2)	0VM404937
B 102	FL RACK	0VM201022J
B 108	P.S.W F	0VM402629
B 121	WORM	0VM402429
B 122	P.S.W C	0VM402626
B 123	P.S.W (WORM THRUST)	0VM403348
B 126	PULLEY	0VM301718D
B 127	PULLEY FELT	0VM404952
B 128	KICK ARM HOLDER	0VM301716
B 129	PRESS FIT BUSH	0VM403652
B 130	KICK ARM	0VM404382
B 131	KICK ARM SPRING	0VM404424
B 132	CLUTCH ASSEMBLY	0VSA05509
B 133	ARM IDLER ASSEMBLY	0VSA05512
B 137	BUSH CLUTCH	0VM404513
B 138	FL ASSEMBLY	0VDM05358
B 139	DOOR OPENER	0VM300780H
B 140	DOOR OPENER SPRING	0VM402510
B 142	SHAFT LOCK ASSEMBLY	0VSA04642
B 144	CLUTCH WASHER MK2	0VM404428
B 146	SPRING SUPPORTER	0VM405084
L1011	SCREW, C-TIGHT M3X9 PAN HEAD +	GPMC3090
L1051	SCREW, S-TIGHT M2.6X6 PAN HEAD +	GPMS9060
L1053	SCREW, S-TIGHT M2.6X6 PAN HEAD +	GPMS9060
L1081	SCREW, S-TIGHT BIND HEAD 3X6	GBMS3060
L1082	SCREW, S-TIGHT BIND HEAD 3X6	GBMS3060
L1091	SCREW, S- TIGHT M3X6 CUP+	GCMS3060
L1101	SCREW, P-TIGHT BIND HEAD 3X8	GBMP3080
L1102	SCREW, P-TIGHT BIND HEAD 3X8	GBMP3080
L1111	SCREW, P-TIGHT, WASHER HEAD M3X8	GCMP3080
L1121	HEXAGON NUT M3	NHMN030
L1151	SCREW, SEMS M3X4 PAN HEAD +	CPM33040
L1221	SCREW,SPECIAL	0VM403688
L1231	SPACER SCREW ASSEMBLY	0VM403752
L1241	SCREW, P-TIGHT SCREW M2X6 BIND+	GBMP2060
L1291	SCREW, P-TIGHT M2.6X6 PAN HEAD +	GPMP9060

DECK MECHANICAL PARTS LIST (MODEL : A, B, C, D, F)
(TYPE : B)

Ref. No.	Description	Part No.
B 1	CHASSIS ASSEMBLY	0VSA05627
B 2	CYLINDER ASSEMBLY or	0VM301796
	CYLINDER ASSEMBLY(SAMSUMG)	0VM201335
B 3	LOADING MOTOR ASSEMBLY	0VSA04781
B 4	MOTOR HOLDER CALKING ASSEMBLY	0VM403364
B 5	CASSETTE DRIVE LEVER ASSEMBLY	0VM403507I
B 6	PINCH ROLLER ARM ASSEMBLY	0VSA05848
B 7	PINCH ARM ASSEMBLY or	0VM402387
	PINCH ARM ASSEMBLY	0VSA05924
B 8	PULLEY ASSEMBLY	0VSA05505
B 9	MOVING GUIDE S ASSEMBLY	0VSA05722
B 10	MOVING GUIDE T ASSEMBLY	0VSA05723
B 11	LOADING ARM T ASSEMBLY	0VSA05503
B 12	LOADING ARM B ASSEMBLY	0VSA04215
B 13	LOADING ARM M ASSEMBLY	0VM404693
B 14	PINCH ROLLER SP	0VM403949
B 15	LUMIRROR WASHER 3.1X6X0.35	0VM403269
B 16	CAM	0VM100453
B 21	LOADING BELT or	0VM403432
	LOADING BELT	0VM403952
B 22	P.S.W(CUT)	0VM404679
B 25	DEW SENSOR or	PCZHUMZHH003
	DEW SENSOR EYHS-10R4	PCZHUMZMS004
B 27	BAND BRAKE ASSEMBLY	0VSA04658
B 28	MAIN BRAKE S ASSEMBLY	0VSA04212
B 29	MAIN BRAKE T ASSEMBLY	0VSA04213
B 30	T BRAKE ARM ASSEMBLY	0VSA04641
B 31	ACE HEAD ASSEMBLY	0VSA04204
B 32	REEL BASE ASSEMBLY	0VSA04759
B 34	MAIN LEVER ASSEMBLY	0VM402558
B 35	TAPE GUIDE ASSEMBLY	0VM402560
B 36	TENSION LEVER SP ASSEMBLY	0VSA04550
B 37	CAPSTAN MOTOR F2QKB92 or	MMDDB5ZSJ002
	CAPSTAN MOTOR DFX67B5VWA1	MMDCB12MS001
B 38	MODE CHANGE LEVER	0VM201234G
B 39	M BRAKE(S)SPRING	0VM402579
B 40	M BRAKE(S)LEVER	0VM300753
B 41	S BREAKE ARM	0VM301759
B 42	M BRAKE T ARM SPRING	0VM402582
B 43	T BRAKE SPRING	0VM402580
B 44	HEAD ADJUST SPRING	0VM402567A
B 45	M LEVER SPRING	0VM402570
B 46	TAPE GUIDE ARM SPRING	0VM402581
B 47	TAPE GUIDE ARM ADJUST SCREW	0VM403242
B 48	ADJUST NUT (B)	0VM404678A
B 49	BT DRIVE ARM	0VM300756K
B 50	B.T DRIVING ARM SPRING	0VM402960
B 51	CHANGE ARM	0VM402441E
B 52	CAPSTAN BELT or	0VM402397
	CAPSTAN BELT	0VM403950
B 53	P.S.W B	0VM402625
B 54	GROUND BRUSH ASSEMBLY or	0VM404524
	GROUND BRUSH ASSEMBLY or	0VM404534
	GROUND BRUSH ASSEMBLY	0VM404827

Ref. No.	Description	Part No.
B 55	C.SLIDER L ASSEMBLY	0VSA04487
B 56	C.SLIDER R ASSEMBLY	0VSA04488
B 58	C.D. GEAR L ASSEMBLY	0VSA04494
B 59	C.D. GEAR R ASSEMBLY	0VSA04495
B 60	CASSETTE PLATE A	0VM301932
B 67	FRONT DOOR OPENER SPRING	0VM403962
B 68	DRIVING GEAR REINFORCEMENT	0VM402961
B 72	UPPER PLATE	0VM201033
B 74	LUMINESCENCE PRISM(B)	0VM301764F
B 77	PRISM R	0VM301292
B 78	PRISM L	0VM301293D
B 79	EARTH SPRING	0VM403524E
B 81	M LEVER HOLDER	0VM301717
B 83	RACK SPRING	0VM403894
B 98	T,G CAP (2)	0VM404937
B 102	FL RACK	0VM201022J
B 108	P.S.W F	0VM402629
B 121	WORM	0VM402429
B 122	P.S.W C	0VM402626
B 123	P.S.W (WORM THRUST)	0VM403348
B 126	PULLEY	0VM301718D
B 127	PULLEY FELT	0VM404952
B 128	KICK ARM HOLDER	0VM301716
B 129	PRESS FIT BUSH	0VM403652
B 130	KICK ARM	0VM404382
B 131	KICK ARM SPRING	0VM404424
B 132	CLUTCH ASSEMBLY	0VSA05509
B 133	ARM IDLER ASSEMBLY	0VSA05512
B 137	BUSH CLUTCH	0VM404513
B 138	FL ASSEMBLY	0VDM05358
B 139	DOOR OPENER	0VM300780H
B 140	DOOR OPENER SPRING	0VM402510
B 142	SHAFT LOCK ASSEMBLY	0VSA04642
B 144	CLUTCH WASHER MK2	0VM404428
B 146	SPRING SUPPORTER	0VM405084
L1011	SCREW, C-TIGHT M3X9 PAN HEAD +	GPMC3090
L1051	SCREW, S-TIGHT M2.6X6 PAN HEAD +	GPMS9060
L1053	SCREW, S-TIGHT M2.6X6 PAN HEAD +	GPMS9060
L1061	SCREW, S-TIGHT M2.6X4 PAN HEAD +	GPMS9040
L1081	SCREW, S-TIGHT BIND HEAD 3X6	GBMS3060
L1082	SCREW, S-TIGHT BIND HEAD 3X6	GBMS3060
L1091	SCREW, S-TIGHT M3X6 CUP+	GCMS3060
L1101	SCREW, P-TIGHT BIND HEAD 3X8	GBMP3080
L1102	SCREW, P-TIGHT BIND HEAD 3X8	GBMP3080
L1111	SCREW, P-TIGHT, WASHER HEAD M3X8	GCMP3080
L1121	HEXAGON NUT M3	NHMN030
L1151	SCREW, SEMS M3X4 PAN HEAD +	CPM33040
L1221	SCREW,SPECIAL	0VM403688
L1231	SPACER SCREW ASSEMBLY	0VM403752
L1241	SCREW, P-TIGHT M2X6 BIND+	GBMP2060
L1291	SCREW, P-TIGHT M2.6X6PAN HEAD +	GPMP9060

DECK MECHANICAL PARTS LIST (MODEL : E)

(TYPE : A)

Ref. No.	Description	Part No.
B 1	CHASSIS ASSEMBLY	0VSA05627
B 2	CYLINDER DRUM ASSEMBLY	0VM301585
B 3	LOADING MOTOR ASSEMBLY	0VSA04781
B 4	MOTOR HOLDER CALKING ASSEMBLY	0VM403364
B 5	CASSETTE DRIVE LEVER ASSEMBLY	0VM403507I
B 6	PINCH ROLLER ARM ASSEMBLY	0VSA05848
B 7	PINCH ARM ASSEMBLY or	0VM402387
	PINCH ARM ASSEMBLY or	0VSA05924
	PINCH ARM ASSEMBLY	0VM402393
B 8	PULLEY ASSEMBLY	0VSA05505
B 9	MOVING GUIDE S ASSEMBLY	0VSA05722
B 10	MOVING GUIDE T ASSEMBLY	0VSA05723
B 11	LOADING ARM T ASSEMBLY	0VSA05503
B 12	LOADING ARM B ASSEMBLY	0VSA04215
B 13	LOADING ARM M ASSEMBLY	0VM404693
B 14	PINCH ROLLER SP	0VM403949
B 15	LUMIRROR WASHER 3.1X6X0.35	0VM403269
B 16	CAM	0VM100453
B 21	LOADING BELT or	0VM403432
	LOADING BELT	0VM403952
B 22	P.S.W(CUT)	0VM404679
B 27	BAND BRAKE ASSEMBLY	0VSA04658
B 28	MAIN BRAKE S ASSEMBLY	0VSA04212
B 29	MAIN BRAKE T ASSEMBLY	0VSA04213
B 30	T BRAKE ARM ASSEMBLY	0VSA04641
B 31	AC HEAD ASSEMBLY	0VSA04756
B 32	REEL BASE ASSEMBLY	0VSA04759
B 34	MAIN LEVER ASSEMBLY	0VM402558
B 35	TAPE GUIDE ASSEMBLY	0VM402560
B 36	TENSION LEVER SP ASSEMBLY	0VSA04550
B 37	CAPSTAN MOTOR F2QKB92	MMDDB5ZSJ002
B 38	MODE CHANGE LEVER	0VM201234G
B 39	M BRAKE(S)SPRING	0VM402579
B 40	M BRAKE(S)LEVER	0VM300753
B 41	S BREAKE ARM	0VM301759
B 42	M BRAKE T ARM SPRING	0VM402582
B 43	T BRAKE SPRING	0VM402580
B 44	HEAD ADJUST SPRING	0VM402567A
B 45	M LEVER SPRING	0VM402570
B 46	TAPE GUIDE ARM SPRING	0VM402581
B 47	TAPE GUIDE ARM ADJUST SCREW	0VM403242
B 48	ADJUST NUT (B)	0VM404678A
B 49	BT DRIVE ARM	0VM300756K
B 51	CHANGE ARM	0VM402441E
B 52	CAPSTAN BELT or	0VM402397
	CAPSTAN BELT	0VM403950
B 53	P.S.W B	0VM402625
B 55	C.SLIDER L ASSEMBLY	0VSA04487
B 56	C.SLIDER R ASSEMBLY	0VSA04488
B 58	C.D. GEAR L ASSEMBLY	0VSA04494
B 59	C.D. GEAR R ASSEMBLY	0VSA04495
B 60	CASSETTE PLATE	0VM301932
B 67	FRONT DOOR OPENER SPRING	0VM403962
B 68	DRIVING GEAR REINFORCEMENT	0VM402961
B 72	UPPER PLATE	0VM201033
B 73	FE HEAD HVFHF0002A or	DHVEC01AL001

Ref. No.	Description	Part No.
	FE HEAD VTR-1X2ERS11-109	DHVEC01TE001
B 74	LUMINESCENCE PRISM or	0VM301291C
	LUMINESCENCE PRISM(B)	0VM301764F
B 76	REC ARM SPRING	0VM402578
B 77	PRISM R	0VM301292
B 78	PRISM L	0VM301293D
B 79	EARTH SPRING	0VM403524E
B 80	SPRING FOR PRESSING PACK	0VM403674
B 81	M LEVER HOLDER	0VM301717
B 83	RACK SPRING	0VM403894
B 98	T,G CAP (2)	0VM404937
B 102	FL RACK	0VM201022J
B 103	REC ARM A	0VM301441H
B 104	REC ARM B	0VM301442G
B 105	REC SPRING	0VM403724
B 108	P.S.W F	0VM402629
B 121	WORM	0VM402429
B 122	P.S.W C	0VM402626
B 123	P.S.W (WORM THRUST)	0VM403348
B 126	PULLEY	0VM301718D
B 127	PULLEY FELT	0VM404952
B 128	KICK ARM HOLDER	0VM301716
B 129	PRESS FIT BUSH	0VM403652
B 130	KICK ARM	0VM404382
B 131	KICK ARM SPRING	0VM404424
B 132	CLUTCH ASSEMBLY	0VSA05509
B 133	ARM IDLER ASSEMBLY	0VSA05512
B 137	BUSH CLUTCH	0VM404513
B 138	FL ASSEMBLY	0VDM05358
B 139	DOOR OPENER	0VM300780H
B 140	DOOR OPENER SPRING	0VM402510
B 142	SHAFT LOCK ASSEMBLY	0VSA04642
B 143	GROUND SPRING	0VM404920A
B 144	CLUTCH WASHER MK2	0VM404428
B146	SPRING SUPPORTER	0VM405084
L1011	SCREW, C-TIGHT M3X9 PAN HEAD +	GPMC3090
L1051	SCREW, S-TIGHT M2.6X6 PAN HEAD +	GPMS9060
L1053	SCREW, S-TIGHT M2.6X6 PAN HEAD +	GPMS9060
L1081	SCREW,S-TIGHT BIND HEAD M3X6	GBMS3060
L1091	SCREW, S-TIGHT M3X6 CUP+	GCMS3060
L1101	SCREW, P-TIGHT BIND HEAD 3X8	GBMP3080
L1102	SCREW, P-TIGHT BIND HEAD 3X8	GBMP3080
L1111	SCREW, P-TIGHT WASHER HEAD M3X8	GCMP3080
L1112	SCREW, P-TIGHT WASHER HEAD M3X8	GCMP3080
L1121	HEXAGON NUT M3	NHMN030
L1151	SCREW, SEMS M3X4 PAN HEAD +	CPM33040
L1191	SCREW, P-TIGHT M2.6X10 PAN HEAD +	GPMP9100
L1202	SCREW, B-TIGHT M3X6 PAN HEAD +	GPMB3060
L1221	SCREW,SPECIAL K7010UA	0VM403688
L1231	SPACER SCREW ASSEMBLY	0VM403752
L1241	SCREW, P-TIGHT M2X6 BIND+	GBMP2060
L1291	SCREW, P-TIGHT M2.6X6 BIND+	GPMP9060

DECK MECHANICAL PARTS LIST (MODEL : E)

(TYPE : B)

Ref. No.	Description	Part No.
B 1	CHASSIS ASSEMBLY	0VSA05627
B 2	CYLINDER ASSEMBLY	0VM301796
	CYLINDER ASSEMBLY	0VM201335
B 3	LOADING MOTOR ASSEMBLY	0VSA04781
B 4	MOTOR HOLDER CALKING ASSEMBLY	0VM403364
B 5	CASSETTE DRIVE LEVER ASSEMBLY	0VM403507I
B 6	PINCH ROLLER ARM ASSEMBLY	0VSA05848
B 7	PINCH ARM ASSEMBLY or	0VM402387
	PINCH ARM ASSEMBLY or	0VSA05924
	PINCH ARM ASSEMBLY	0VM402393
B 8	PULLEY ASSEMBLY	0VSA05505
B 9	MOVING GUIDE S ASSEMBLY	0VSA05722
B 10	MOVING GUIDE T ASSEMBLY	0VSA05723
B 11	LOADING ARM T ASSEMBLY	0VSA05503
B 12	LOADING ARM B ASSEMBLY	0VSA04215
B 13	LOADING ARM M ASSEMBLY	0VM404693
B 14	PINCH ROLLER SP	0VM403949
B 15	LUMIRROR WASHER 3.1X6X0.35	0VM403269
B 16	CAM	0VM100453
B 21	LOADING BELT or	0VM403432
	LOADING BELT	0VM403952
B 22	P.S.W(CUT)	0VM404679
B 27	BAND BRAKE ASSEMBLY	0VSA04658
B 28	MAIN BRAKE S ASSEMBLY	0VSA04212
B 29	MAIN BRAKE T ASSEMBLY	0VSA04213
B 30	T BRAKE ARM ASSEMBLY	0VSA04641
B 31	AC HEAD ASSEMBLY	0VSA04756
B 32	REEL BASE ASSEMBLY	0VSA04759
B 34	MAIN LEVER ASSEMBLY	0VM402558
B 35	TAPE GUIDE ASSEMBLY	0VM402560
B 36	TENSION LEVER SP ASSEMBLY	0VSA04550
B 37	CAPSTAN MOTOR F2QKB92	MMDDB5ZSJ002
B 38	MODE CHANGE LEVER	0VM201234G
B 39	M BRAKE(S)SPRING	0VM402579
B 40	M BRAKE(S)LEVER	0VM300753
B 41	S BREAKE ARM	0VM301759
B 42	M BRAKE T ARM SPRING	0VM402582
B 43	T BRAKE SPRING	0VM402580
B 44	HEAD ADJUST SPRING	0VM402567A
B 45	M LEVER SPRING	0VM402570
B 46	TAPE GUIDE ARM SPRING	0VM402581
B 47	TAPE GUIDE ARM ADJUST SCREW	0VM403242
B 48	ADJUST NUT (B)	0VM404678A
B 49	BT DRIVE ARM	0VM300756K
B 51	CHANGE ARM	0VM402441E
B 52	CAPSTAN BELT or	0VM402397
	CAPSTAN BELT	0VM403950
B 53	P.S.W B	0VM402625
B 54	GROUND BRUSH ASSEMBLY or	0VM404524
	GROUND BRUSH ASSEMBLY or	0VM404534
	GROUND BRUSH ASSEMBLY	0VM404827
B 55	C.SLIDER L ASSEMBLY	0VSA04487
B 56	C.SLIDER R ASSEMBLY	0VSA04488
B 58	C.D. GEAR L ASSEMBLY	0VSA04494
B 59	C.D. GEAR R ASSEMBLY	0VSA04495
B 60	CASSETTE PLATE	0VM301932

Ref. No.	Description	Part No.
B 67	FRONT DOOR OPENER SPRING	0VM403962
B 68	DRIVING GEAR REINFORCEMENT	0VM402961
B 72	UPPER PLATE	0VM201033
B 73	FE HEAD HVFHF0002A or	DHVEC01AL001
	FE HEAD VTR-1X2ERS11-109	DHVEC01TE001
B 74	LUMINESCENCE PRISM or	0VM301291C
	LUMINESCENCE PRISM(B)	0VM301764F
B 76	REC ARM SPRING	0VM402578
B 77	PRISM R	0VM301292
B 78	PRISM L	0VM301293D
B 79	EARTH SPRING	0VM403524E
B 80	SPRING FOR PRESSING PACK	0VM403674
B 81	M LEVER HOLDER	0VM301717
B 83	RACK SPRING	0VM403894
B 98	T,G CAP (2)	0VM404937
B 102	FL RACK	0VM201022J
B 103	REC ARM A	0VM301441H
B 104	REC ARM B	0VM301442G
B 105	REC SPRING	0VM403724
B 108	P.S.W F	0VM402629
B 121	WORM	0VM402429
B 122	P.S.W C	0VM402626
B 123	P.S.W (WORM THRUST)	0VM403348
B 126	PULLEY	0VM301718D
B 127	PULLEY FELT	0VM404952
B 128	KICK ARM HOLDER	0VM301716
B 129	PRESS FIT BUSH	0VM403652
B 130	KICK ARM	0VM404382
B 131	KICK ARM SPRING	0VM404424
B 132	CLUTCH ASSEMBLY	0VSA05509
B 133	ARM IDLER ASSEMBLY	0VSA05512
B 137	BUSH CLUTCH	0VM404513
B 138	FL ASSEMBLY	0VDM05358
B 139	DOOR OPENER	0VM300780H
B 140	DOOR OPENER SPRING	0VM402510
B 142	SHAFT LOCK ASSEMBLY	0VSA04642
B 143	GROUND SPRING	0VM404920A
B 144	CLUTCH WASHER MK2	0VM404428
B146	SPRING SUPPORTER	0VM405084
L1011	SCREW, C-TIGHT M3X9 PAN HEAD +	GPMC3090
L1051	SCREW, S-TIGHT M2.6X6 PAN HEAD +	GPMS9060
L1053	SCREW, S-TIGHT M2.6X6 PAN HEAD +	GPMS9060
L1061	SCREW, S- TIGHT M2.6 X 4PAN HEAD +	GPMS9040
L1062	SCREW, S- TIGHT M2.6 X 4PAN HEAD +	GPMS9040
L1081	SCREW,S-TIGHT BIND HEAD M3X6	GBMS3060
L1091	SCREW, S-TIGHT M3X6 CUP+	GCMS3060
L1101	SCREW, P-TIGHT BIND HEAD 3X8	GBMP3080
L1102	SCREW, P-TIGHT BIND HEAD 3X8	GBMP3080
L1111	SCREW, P-TIGHT WASHER HEAD M3X8	GCMP3080
L1112	SCREW, P-TIGHT WASHER HEAD M3X8	GCMP3080
L1121	HEXAGON NUT M3	NHMN030
L1151	SCREW, SEMS M3X4 PAN HEAD +	CPM33040
L1191	SCREW, P-TIGHT 2.6X10 PAN HEAD +	GPMP9100
L1202	SCREW, B-TIGHT M3X6 PAN HEAD +	GPMB3060
L1221	SCREW,SPECIAL K7010UA	0VM403688

Ref. No.	Description	Part No.
L1231	SPACER SCREW ASSEMBLY	0VM403752
L1241	SCREW, P-TIGHT M2X6 BIND+	GBMP2060
L1291	SCREW, P-TIGHT M2.6X6 BIND+	GPMP9060

DECK ELECTRICAL PARTS LIST (MODEL : A, B, C, D, F)

PRODUCT SAFETY NOTE: Products marked with a ⚠ have special characteristics important to safety. Before replacing any of these components, read carefully the product safety notice in this service manual. Don't degrade the safety of the product through improper servicing.

NOTE: Parts that not assigned part numbers (----------) are not available.

JOINT CBA

Ref. No.	Description	Part No.
	JOINT CBA	0VSA05729
	Consists of the following:	
	JOINT (JNT-A) CBA	----------
	MODE SW (JNT-B) CBA	----------
	ACE HEAD (JNT-C) CBA	----------

JOINT (JNT-A) CBA

Ref. No.	Description	Part No.
	JOINT (JNT-A) CBA	----------
	Consists of the following:	
	CONNECTORS	
CN2801	FFC CONNECTOR BASE, TOP 9P or	JC2SJ09ERH0C
	FFC CONNECTOR BASE, TOP 9P or	1700915
	FFC CONNECTOR BASE, TOP 9P or	1700449
	FFC CONNECTOR BASE, TOP 9P or	1700515
	FFC CONNECTOR BASE, TOP 9P	1700986
CN2901	ANGLE SOCKET CONNECTOR, 20P	1770615
CN2902	ANGLE PIN HEADER, 2P	1740775
CN2904	ANGLE PIN HEADER, 2P	1740775
	RESISTORS	
R 2801	CARBON RES. 1/5W J 27K Ω or	1324273T
	CARBON RES. 1/6W J 27K Ω or	132A273T
	CARBON RES. 1/4W J 27K Ω	RCX4JATZ0273
R 2802	CARBON RES. 1/5W J 27K Ω or	1324273T
	CARBON RES. 1/6W J 27K Ω or	132A273T
	CARBON RES. 1/4W J 27K Ω	RCX4JATZ0273
	MISCELLANEOUS	
CL2901	JUMPER WIRE, 5P AWG26#20080/P2.0/50	WX1K7010-003
	JUMPER WIRE, 4P AWG26#20080/P2.0/80	WX1K4050-001
	FFC CABLE, 9P FFC/P1.25/120	WX3909QZ4413

MODE SW (JNT-B) CBA

Ref. No.	Description	Part No.
	MODE SW (JNT-B) CBA	----------
	Consists of the following:	
SW2901	MODE SWITCH HMW0420-710010	SSR0104HD001

ACE HEAD (JNT-C) CBA

Ref. No.	Description	Part No.
	ACE HEAD (JNT-C) CBA	----------
	Consists of the following:	
CN2903	FLAT CABLE CONNECTOR 4P	JEHBJ04JE001

HEAD AMP (PRV) CBA

Ref. No.	Description	Part No.
	HEAD AMP (PRV) CBA	0VSA05559
	Consists of the following:	
	CAPACITORS	
C 3501	CERAMIC CAP. F Z 0.1μF/50V	3F40104T
C 3502	ELECTROLYTIC CAP. 100μF/6.3V M H7	526R107S
C 3503	ELECTROLYTIC CAP. 0.22μF/50V M H7	526W224S
C 3507	CERAMIC CAP. F Z 0.1μF/50V	3F40104T
C 3509	CERAMIC CAP. F Z 0.1μF/50V	3F40104T
C 3521	CERAMIC CAP. B J 100pF/50V	3B11101
C 3522	CERAMIC CAP. SL J 47pF/50V	3S11470
	CONNECTORS	
CN3501	ANGLE SOCKET CONNECTOR 15P	1770610
CN3502	FFC CONNECTOR BASE, SIDE 5P or	JC96J05ERC0C
	FFC CONNECTOR BASE, SIDE 5P	1700471
CN3504	FFC CONNECTOR BASE, SIDE 6P or	JC96J06ERC0C
	FFC CONNECTOR BASE, SIDE 6P	1700472
	IC	
IC3501	IC, VIDEO H-AMP LA7376	QSBLA0SSY035
	COILS	
L 3501	INDUCTOR 22μH-K-26T or	LLAXKDTKA220
	INDUCTOR 22μH-K-26T	LLAXKATTU220
	RESISTORS	
R 3501	CARBON RES. 1/4W J 22K Ω or	RCX4JATZ0223
	CARBON RES. 1/6W J 22K Ω	132A223T
R 3502	CARBON RES. 1/4W J 8.2K Ω or	RCX4JATZ0822
	CARBON RES. 1/6W J 8.2K Ω or	132A822T
	MISCELLANEOUS	
2B 2	SHIELD, TOP (A)	0VM301599A
2B 3	SHIELD, BOTTOM (A)	0VM301600
	FFC CABLE, 6P FFC/P1.25/40	WX3906QZ44A5

DECK ELECTRICAL PARTS LIST (MODEL : E)

PRODUCT SAFETY NOTE: Products marked with a ⚠ have special characteristics important to safety. Before replacing any of these components, read carefully the product safety notice in this service manual. Don't degrade the safety of the product through improper servicing.

GENERAL NOTE: "CBA" is an abbreviation for "Circuit Board Assembly".
NOTE: Parts that not assigned part numbers (----------) are not available.

Tolerance of Capacitors and Resistors are noted with the following symbols.

C.....±0.25%
D.....±0.5%
F.....±1%
G.....±2%
J.....±5%
K.....±10%
M.....±20%
N.....±30%
Z.....+80/-20%

JOINT CBA

Ref. No.	Description	Part No.
	JOINT CBA (JOINT-A/B/C) Consists of the following:	0VSA05796
	JOINT (JOINT-A) BLOCK	----------
	MODE SW. (JOINT-B) BLOCK	----------
	ACE HEAD (JOINT-C) BLOCK	----------

JOINT (JOINT-A) BLOCK

Ref. No.	Description	Part No.
	JOINT (JOINT-A) BLOCK Consists of the following:	----------
	Connectors	
CN2801	FFC CONNECTOR BASE, TOP 9P or	JC2SJ09ERH0C
	FFC CONNECTOR BASE, TOP 9P or	1700915
	FFC CONNECTOR BASE, TOP 9P or	1700449
	FFC CONNECTOR BASE, TOP 9P or	1700515
	FFC CONNECTOR BASE, TOP 9P	1700986
CN2901	ANGLE SOCKET CONNECTOR, 20P	1770615
CN2902	ANGLE PIN HEADER, 2P	1740775
	Resistors	
R 2801	CARBON RES. 1/4W J 27K Ω or	RCX4JATZ0273
	CARBON RES. 1/6W J 27K Ω	132A273T
R 2802	CARBON RES. 1/4W J 27K Ω or	RCX4JATZ0273
	CARBON RES. 1/6W J 27K Ω	132A273T
	Miscellaneous	
CL2901	JUMPER WIRE, 5P	WX1K7010-003
CL2902	JUMPER WIRE, 6P	WX1K7010-001
	FFC CABLE, 9P	WX3909QZ4413

MODE SW. (JOINT-B) BLOCK

Ref. No.	Description	Part No.
	MODE SW. (JOINT-B) BLOCK Consists of the following:	----------
SW2901	MODE SWITCH	SSR0104HD001

ACE HEAD (JOINT-C) BLOCK

Ref. No.	Description	Part No.
	ACE HEAD (JOINT-C) BLOCK Consists of the following:	----------
CN2903	FLAT CABLE CONNECTOR 6P	JEHBJ06JE001

HEAD AMP (PRV) CBA

Ref. No.	Description	Part No.
	HEAD AMP (PRV) CBA Consists of the following:	0VSA05795
	Capacitors	
C 3501	CERAMIC CAP. F Z 0.1μF/50V	3F40104T
C 3502	ELECTROLYTIC CAP. 100μF/6.3V M	526R107S
C 3503	ELECTROLYTIC CAP. 0.22μF/50V M	526W224S
C 3504	CERAMIC CAP. Y M 0.01μF/16V or	3Y4D103T
	CERAMIC CAP. F Z 0.01μF/16V	1220842T
C 3505	CERAMIC CAP. Y M 0.01μF/16V or	3Y4D103T
	CERAMIC CAP. F Z 0.01μF/16V	1220842T
C 3506	CERAMIC CAP. Y M 0.01μF/16V or	3Y4D103T
	CERAMIC CAP. F Z 0.01μF/16V	1220842T
C 3507	CERAMIC CAP. F Z 0.1μF/50V	3F40104T
C 3509	CERAMIC CAP. F Z 0.1μF/50V	3F40104T
C 3513	CERAMIC CAP. SL J 15pF/50V	3S11150
C 3521	CERAMIC CAP. B J 100pF/50V	3B11101
C 3522	CERAMIC CAP. SL J 47pF/50V	3S11470
	Connectors	
CN3501	ANGLE SOCKET CONNECTOR 15P	1770610
CN3502	FFC CONNECTOR BASE, SIDE 5P or	JC96J05ERC0C
	FFC CONNECTOR BASE, SIDE 5P	1700471
CN3503	CONNECTOR ASSEMBLY 2P	WX1K7010-007
CN3504	FFC CONNECTOR BASE, SIDE 6P	JC96J06ERC0C
	Coil	
L 3501	INDUCTOR 22μH-K-26T or	LLAXKDTKA220
	INDUCTOR 22μH-K-26T	LLAXKATTU220
	IC	
IC3501	IC, VIDEO H-AMP LA7376	QSBLA0SSY035
	Resistors	
R 3501	CARBON RES. 1/5W J 22K Ω or	1324223T
	CARBON RES. 1/6W J 22K Ω or	132A223T
	CARBON RES. 1/4W J 22K Ω	RCX4JATZ0223
R 3502	CARBON RES. 1/5W J 8.2K Ω or	1324822T
	CARBON RES. 1/6W J 8.2K Ω or	132A822T
	CARBON RES. 1/4W J 8.2K Ω	RCX4JATZ0822
R 3503	CARBON RES. 1/5W J 1K Ω or	1324102T
	CARBON RES. 1/6W J 1K Ω or	132A102T
	CARBON RES. 1/4W J 1K Ω	RCX4JATZ0102
R 3504	CARBON RES. 1/5W J 5.6K Ω or	1324562T
	CARBON RES. 1/6W J 5.6K Ω or	132A562T
	CARBON RES. 1/4W J 5.6K Ω	RCX4JATZ0562
R 3505	CARBON RES. 1/5W J 33K Ω or	1324333T

Ref. No.	Description	Part No.
	CARBON RES. 1/6W J 33K Ω or	132A333T
	CARBON RES. 1/4W J 33K Ω or	RCX4JATZ0333
	Miscellaneous	
2B 2	SHIELD, TOP (A)	0VM301599
2B 3	SHIELD, BOTTOM (A)	0VM301600
	FFC CABLE 6P	WX3906QZ4405

Main 3/5 Schematic Diagram (MODEL: F)

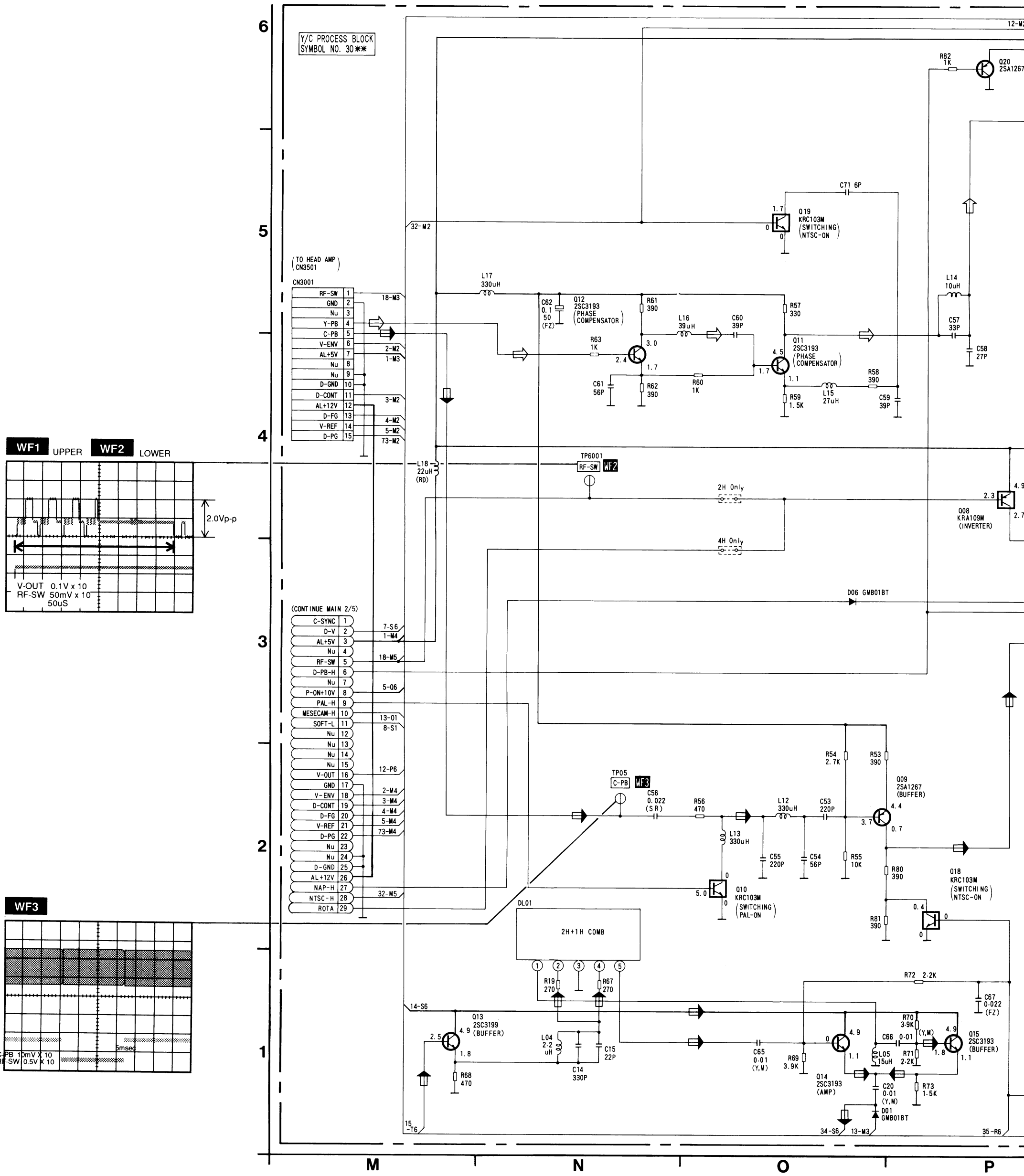

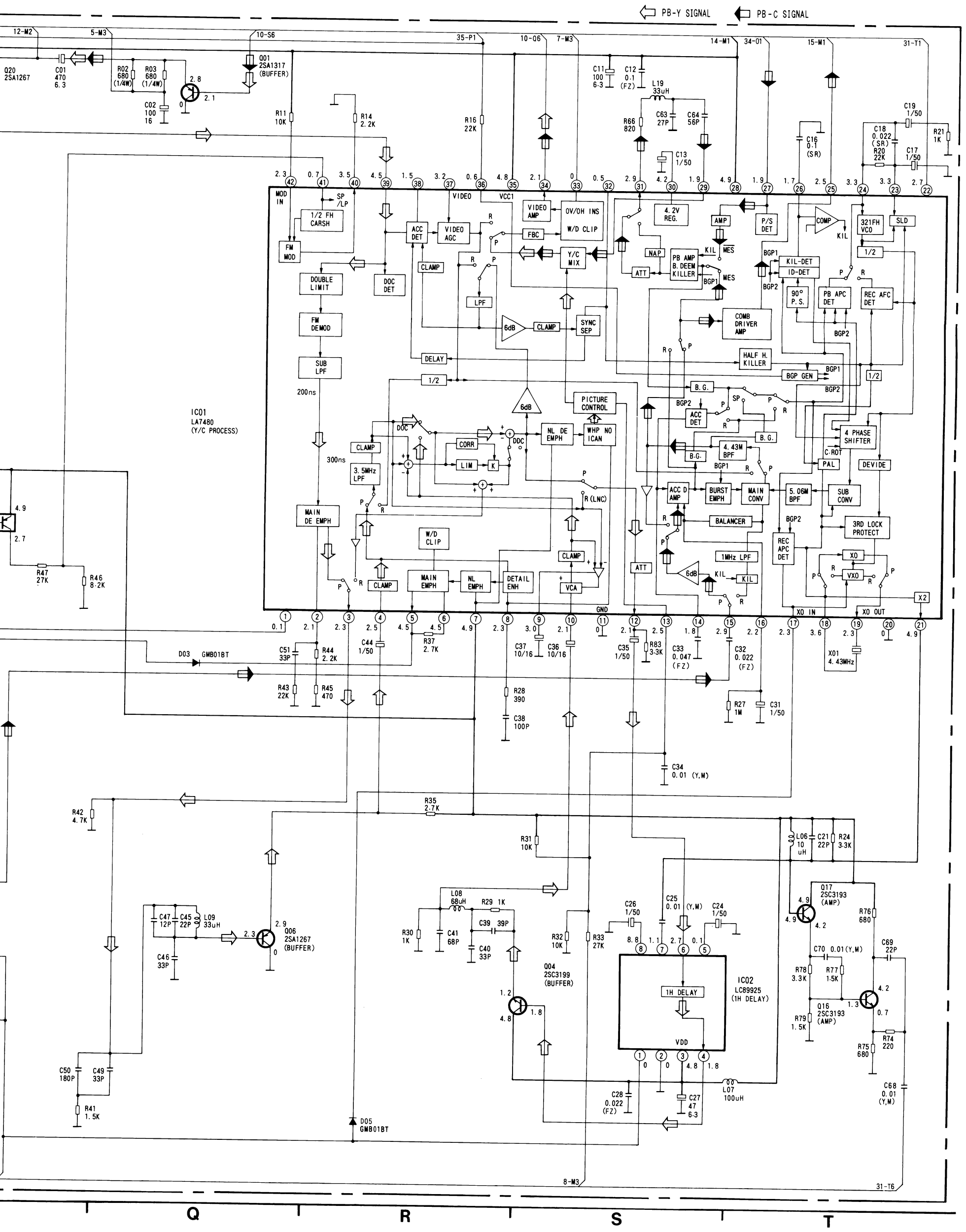
PB-Y SIGNAL
PB-C SIGNAL
IC01
LA7480
(Y/C PROCESS)
IC02
LC89925
(1H DELAY)
Q20
2SA1267
Q01
2SA1317
(BUFFER)
Q06
2SA1267
(BUFFER)
Q04
2SC3199
(BUFFER)
Q17
2SC3193
(AMP)
Q16
2SC3193
(AMP)
X01
4.43MHz
D03 GMB01BT
D05 GMB01BT
MOD IN
SP /LP
1/2 FH CARSH
FM MOD
DOUBLE LIMIT
FM DEMOD
SUB LPF
200ns
300ns
MAIN DE EMPH
3.5MHz LPF
CLAMP
DOC DET
ACC DET
VIDEO AGC
VIDEO
VCC1
VIDEO AMP
OV/OH INS
W/D CLIP
FBC
Y/C MIX
LPF
6dB
SYNC SEP
DELAY
1/2
PICTURE CONTROL
NL DE EMPH
WHP NO ICAN
CORR
LIM
K
DDC
DOC
W/D CLIP
MAIN EMPH
NL EMPH
DETAIL ENH
VCA
R (LNC)
4.2V REG.
NAP
ATT
PB AMP
B. DEEM
KILLER
KIL
MES
BGP1
BGP2
COMB DRIVER AMP
HALF H. KILLER
BGP GEN
B. G.
SP
4.43M BPF
ACC D AMP
BURST EMPH
MAIN CONV
5.06M BPF
SUB CONV
BALANCER
1MHz LPF
AMP
P/S DET
COMP
KIL-DET
ID-DET
90° P. S.
PB APC DET
REC AFC DET
REC APC DET
321FH VCO
SLD
4 PHASE SHIFTER
C-ROT
PAL
DEVIDE
3RD LOCK PROTECT
XO
VXO
X2
XO IN
XO OUT
GND
R11 10K
R14 2.2K
R16 22K
R66 820
R21 1K
R20 22K
R37 2.7K
R35 2.7K
R31 10K
R28 390
R27 1M
R83 3.3K
R43 22K
R45 470
R44 2.2K
R42 4.7K
R47 27K
R46 8.2K
R41 1.5K
R30 1K
R29 1K
R32 10K
R33 27K
R24 3.3K
R78 3.3K
R77 1.5K
R79 1.5K
R76 680
R75 680
R74 220
C01 470 6.3
C02 100 16
C11 100 6.3
C12 0.1 (FZ)
L19 33uH
C63 27P
C64 56P
C13 1/50
C16 0.1 (SR)
C18 0.022 (SR)
C19 1/50
C17 1/50
C51 33P
C44 1/50
C37 10/16
C36 10/16
C35 1/50
C33 0.047 (FZ)
C32 0.022 (FZ)
C31 1/50
C38 100P
C34 0.01 (Y,M)
C47 12P
C45 22P
L09 33uH
C46 33P
C50 180P
C49 33P
L08 68uH
C39 39P
C40 33P
C41 68P
C26 1/50
C25 0.01 (Y,M)
C24 1/50
C28 0.022 (FZ)
C27 47 6.3
L07 100uH
L06 10 uH
C21 22P
C70 0.01(Y,M)
C69 22P
C68 0.01 (Y,M)
8-M3
31-T6
Q
R
S
T

V2010SCM3

Main 4/5 Schematic Diagram (MODELS: A, B)

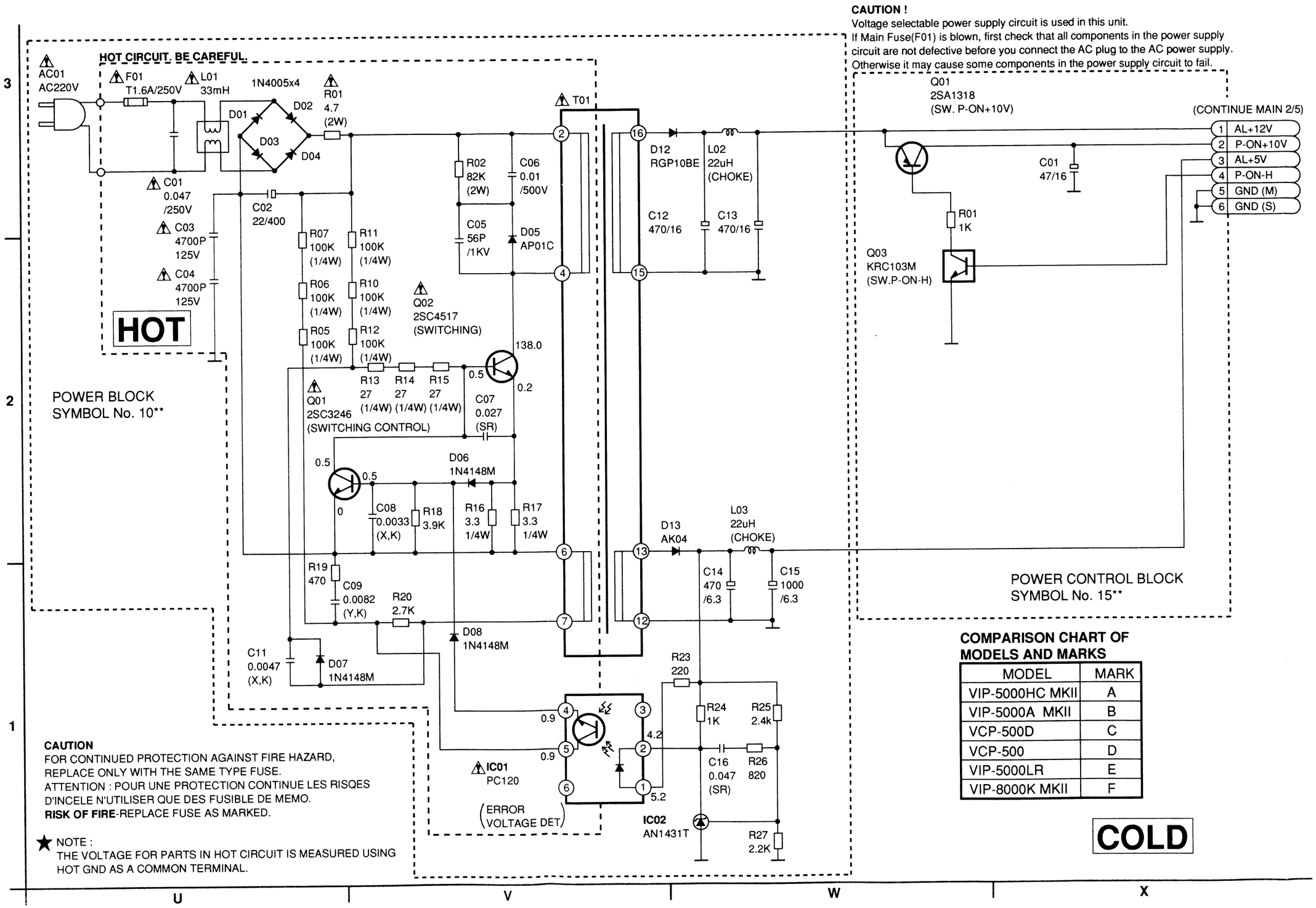

COMPARISON CHART OF MODELS AND MARKS

MODEL	MARK
VIP-5000HC MKII	A
VIP-5000A MKII	B
VCP-500D	C
VCP-500	D
VIP-5000LR	E
VIP-8000K MKII	F

SYSTEM CONTROL TIMING CHARTS

Mode SW : LD-A/LD-B/LD-C/LD-D

LD-SW				Symbol	
LD-A	LD-B	LD-C	LD-D		
L	H	H	H	EJ	Eject
H	H	H	H	CL	REW Reel
L	L	H	H	SB	Stop (B)
H	L	H	H	TL	Brake Cancel
H	L	L	H	FB	
H	H	L	H	SF	FF / REW, Stop (A)
H	H	L	L	AU	
H	H	H	L	AL	Play / REC (FS Pause 2 Head Still)
H	L	H	L	SS	4 Head Slow / Still
H	H	H	H	GC	Capstan Reversal
L	H	H	L	RS	RS (REV Reel)

Note:

EJ ⟶ RS : Loading FWD (LM-FWD "H", LM-REV "L")

RS ⟶ EJ : Loading REV (LM-FWD "L", LM-REV "H")

Stop (A) = Loading

Stop (B) = Unloading

Note :

Symbol	Loading Status
EJ	Eject
CL	Eject ~ Loading Completion
SB	REW ~ Stop(B)
TL	Stop(B) ~ Brake Cancel
FB	Brake Cancel ~ FF / REW
SF	FF / REW ~ Stop(A)
AU	Stop(A) ~ Play / REC
AL	Play / REC ~ 4 Head Still / Slow
SS	4 Head Still / Slow ~ Capstan Reversal
GC	Capstan Reversal ~ REW Reel
RS	REW

Loading Motor/Control

LM-FWD	LM-REV	Description
H	H	Stop
H	L	Loading Forward Rotation
L	H	Loading Reverse Rotation

Capstan Motor/Control

C-DRIVE	C-F/R	Description
L	L/H	Stop, The brake is not applied.
H	L	Capstan, Reel Forward Rotation
H	H	Capstan, Reel Reverse Rotation

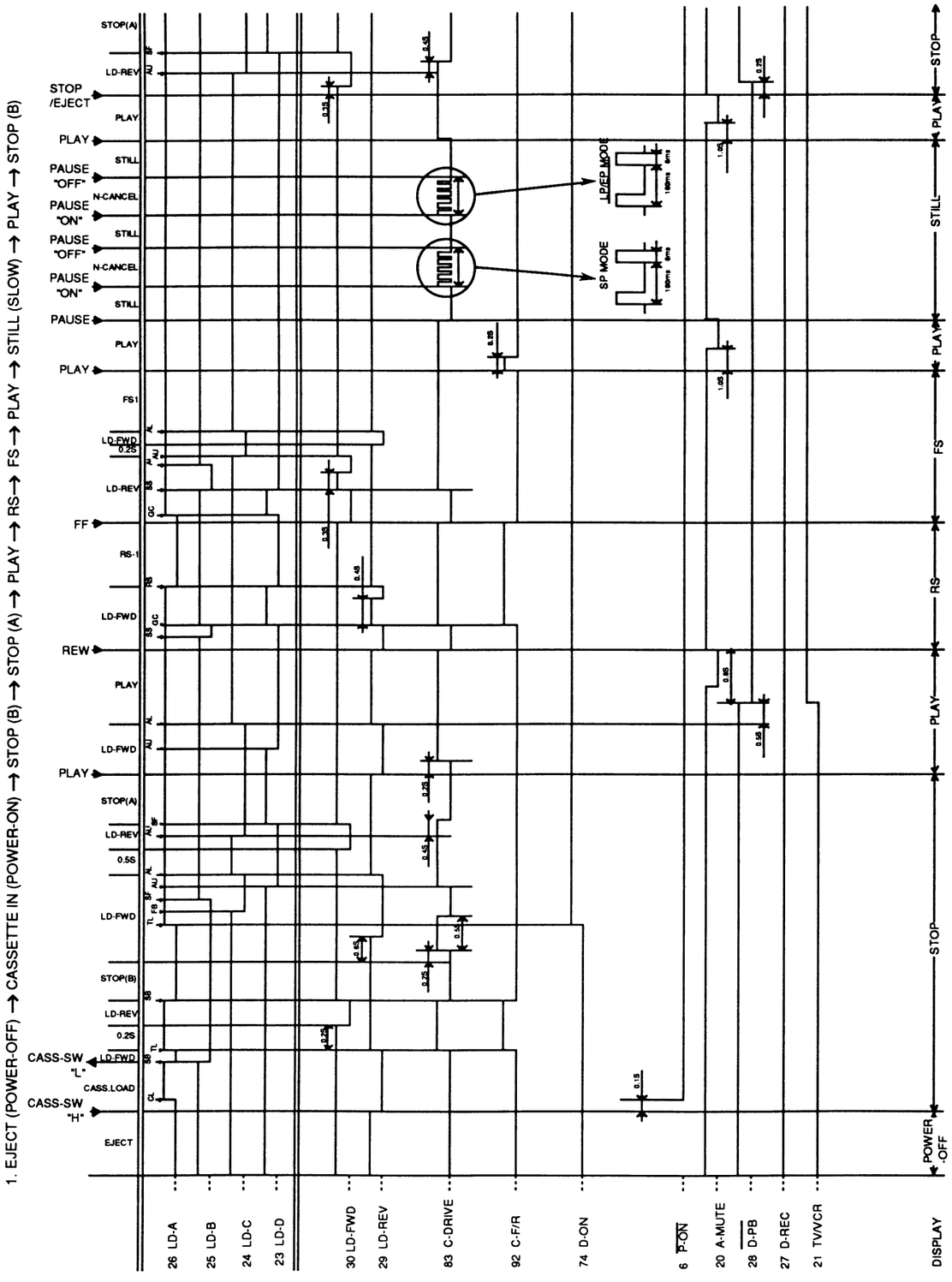
1. EJECT (POWER-OFF) → CASSETTE IN (POWER-ON) → STOP (B) → STOP (A) → PLAY → RS → FS → PLAY → STILL (SLOW) → PLAY → STOP (B)
STOP(A)
LD-REV
STOP /EJECT
PLAY
PLAY
STILL
PAUSE "OFF"
N-CANCEL
PAUSE "ON"
STILL
PAUSE "OFF"
N-CANCEL
PAUSE "ON"
STILL
PAUSE
PLAY
PLAY
FS1
LD-FWD
0.2S
LD-REV
FF
RS-1
LD-FWD
REW
PLAY
LD-FWD
PLAY
STOP(A)
LD-REV
0.5S
LD-FWD
STOP(B)
LD-REV
0.2S
CASS-SW "L"
LD-FWD
CASS.LOAD
CASS-SW "H"
EJECT
LP/EP MODE
SP MODE
STOP
PLAY
STILL
PLAY
FS
RS
PLAY
STOP
POWER -OFF
26 LD-A
25 LD-B
24 LD-C
23 LD-D
30 LD-FWD
29 LD-REV
83 C-DRIVE
92 C-F/R
74 D-ON
6 P-ON
20 A-MUTE
28 D-PB
27 D-REC
21 TV/VCR
DISPLAY

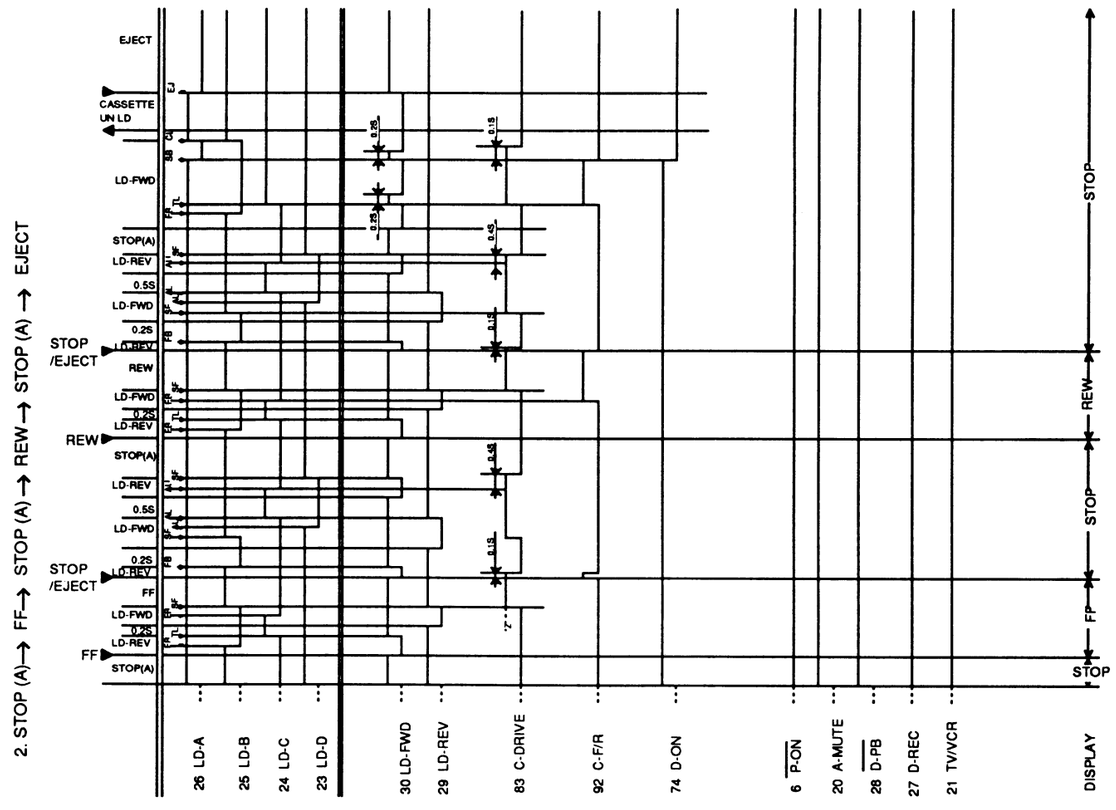
2. STOP (A)→ FF→ STOP (A) → REW→ STOP (A) → EJECT
EJECT
CASSETTE UN LD
LD-FWD
STOP(A)
LD-REV
0.5S
LD-FWD
0.2S
STOP /EJECT
LD-REV
REW
LD-FWD
0.2S
LD-REV
REW
STOP(A)
LD-REV
0.5S
LD-FWD
0.2S
STOP /EJECT
LD-REV
FF
LD-FWD
0.2S
LD-REV
FF
STOP(A)
STOP
REW
STOP
FP
STOP
26 LD-A
25 LD-B
24 LD-C
23 LD-D
30 LD-FWD
29 LD-REV
83 C-DRIVE
92 C-F/R
74 D-ON
6 P-ON
20 A-MUTE
28 D-PB
27 D-REC
21 TV/VCR
DISPLAY

MODEL : E

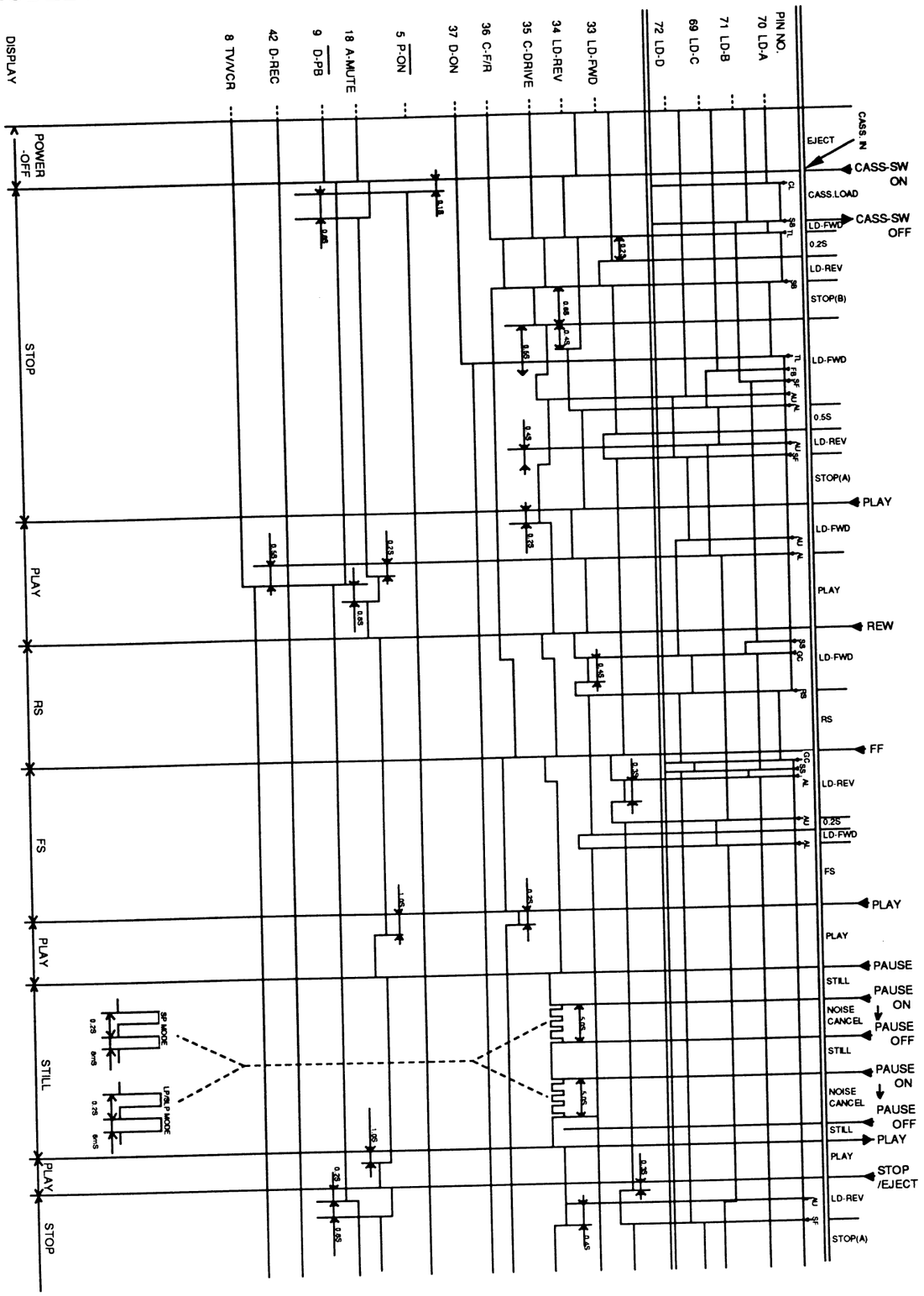

MODEL : E

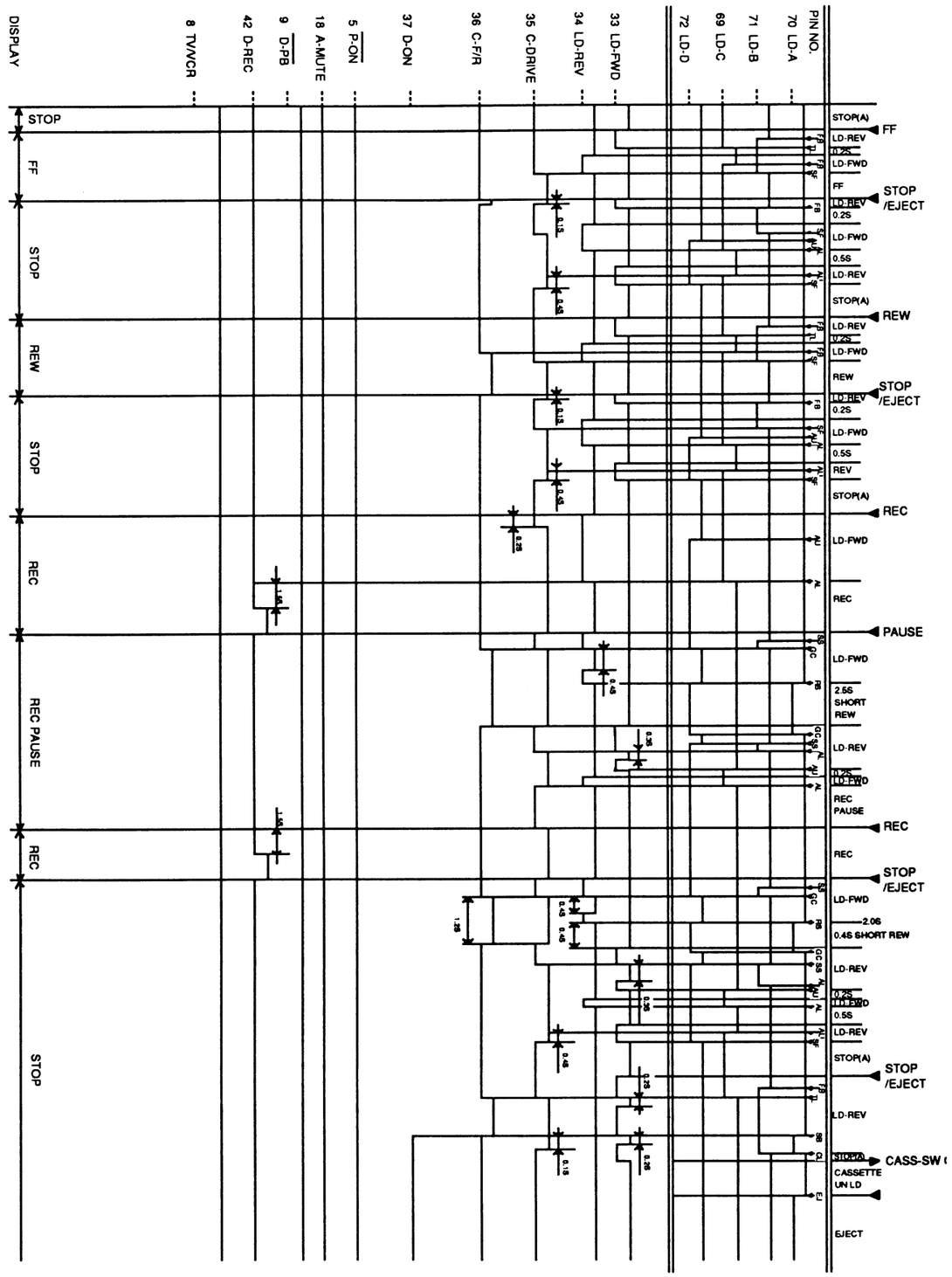

IC PIN FUNCTION DESCRIPTION (MODELS : A, B, C, D, F)

COMPARISON CHART OF MODELS AND MARKS

MODEL	MARK
VIP-5000HC MKII	A
VIP-5000A MKII	B
VCP-500D	C
VCP-500	D
VIP-5000LR	E
VIP-8000K MKII	F

IC6001 QSMQA0RSN023 or QSMQB0RSN023 (SERVO/SYSTEM CONTROL)

"H" ≥ 4.6, "L"≤ 0.5

Pin No.	IN/OUT	Signal Name	Function	Active Level
1	OUT	RF-SW	Video Head Switching Pulse	H/L
2	–	GRAY-H	Not Used	–
3				
4	OUT	ROTA	Color Phase Rotary Change over Signal	H/L
5				
6				
7	OUT	MESECAM-H	MESECAM mode = "H"	H
8				
9	OUT	NAP	PAL-TV mode/NTSC4.43 TV mode Switching Signal = PALTV "H" NTSC4.43 "L"	H/L
10	OUT	PAL-H	PAL mode = "H"	H
11	OUT	PAL/NTSC	PAL/NTSC mode Switching Signal (PAL = "L"/NTSC = "H")	H/L
12	IN	D-V (B)	Dummy V-SYNC (B)	H/L
13	IN	D-V (A)	Dummy V-SYNC (A)	H/L
14				
15	OUT	P-ON-L	Power-on Instruction Signal (P-ON = "L")	L
16	OUT	P-ON-H	Power-on Instruction Signal (P-ON = "H")	H
17				
18				
19	OUT	A-MUTE-H	Audio Mute Output (Mute = "H")	H
20	OUT	D-PB-L	Video/Audio Playback Instruction Signal (Playback = "L")	L
21	OUT	TV/VCR	RF CONV. ON/OFF Signal	H
22	IN	CAS-SW	Cassette IN/OUT Detector (IN/OUT Rotation = "H")	H
23	IN	LD-C	Loading Position Detector	H/L
24	IN	LD-A	Loading Position Detector	H/L
25	IN	LD-B	Loading Position Detector	H/L
26	IN	LD-D	Loading Position Detector	H/L
27				
28	OUT	D-PB-H	Video/Audio Playback Instruction Signal (Playback = "H")	H
29	OUT	LD-FWD	Loading Motor Forward Control Output (Forward/Stop = "H")	H
30	OUT	LD-REV	Loading Motor Reverse Control Output (Reverse/Stop = "H")	H
31	OUT	FF-IND	FF Mode Display Output	L
32	OUT	PLAY-IND	PLAY Mode Display Output	L
33	OUT	REW-IND	REW mode Display Output	L
34	OUT	SOFT-IND	Soft Position Mode Display Output	L

Pin No.	IN/OUT	Signal Name	Function	Active Level
35	OUT	A-REPEAT-IND	Auto Repeat Mode Display Output	L
36	OUT	Power/DEW-IND	Power-ON Mode Display Output/Dew mode Display Output (LED Flashing)	L
37				
38				
39				
40	IN	RESET	System Reset Signal (Usually = "H"/Reset = "L")	L
41	–	VSS	Digital Power GND	–
42	OUT	OSC	Crystal Oscillator 12 MHz	–
43	IN	OSC	Crystal Oscillator 12 MHz	–
44,				
45				
46				
47				
48	OUT	SOFT-Position	Soft Position Mode Switching Signal (Soft Position ON = "H")	H
49	IN	A/D KEY - 2	Key Scan Signal Input	–
50	IN	A/D KEY - 1	Key Scan Signal Input	–
51	OUT	DM-ON	Drum Rotation Control Signal Output (Rotation = "H")	H
52	–	A-VSS	Analog Power GND	–
53	–	V REF	Servo Reference Voltage	–
54	–	A-VDD	Analog Power Source +5V	–
55	IN	END-S	Tape END Position Detect	L
56	IN	ST-S	Tape Start Position Detect	L
57				
58	IN	T-REEL	Take up Reel Rotation Signal Input	H/L
59	IN	V-ENV	Video DC Envelope Voltage Input	–
60				
61				
62	IN	PG-DELAY	RF-SW Signal Delay Adjust Voltage Input	–
63	IN	SENS-INH	Interrupt Signals from "Start" "END" "Reel" sensor at "L"	L
64				
65	IN	DEW	Dew Sensor Position Detect	L
66	IN	C-SYNC	Composite Sync Signal Input (V-SYNC Sepa)	H
67	IN	PB-CTL	Capstan Motor Control Pulse Input at Playback Mode	–
68	IN	D-PG	Drum Pulse Generator Input	–
69	IN	D-FG	Drum Frequency Generator Input	–
70	IN	C-FG	Capstan Frequency Generator Signal Input	–
71	OUT	D-CONT	Drum Motor Control Signal	–
72	OUT	C-CONT	Capstan Motor Control Signal	–
73				
74				
75				
76				
77	IN	CAS-S-INH	Cassette Loading Motion Inhibit by Start Sensor	L
78	–	VCC	+5V	–
79				
80				
81				
82	OUT	C-DRIVE	Capstan Motor Drive Signal Output (Rotation = "H"/Stop = "L")	H

Pin No.	IN/OUT	Signal Name	Function	Active Level
83	–	D-H	Not Used	–
84				
85	IN	REMOCON	Remote Control Input Signal	H
86				
87				
88	–	VSS	GND	–
89	–	VSS	GND	–
90				
91	OUT	A-MUTE-L	Audio Mute Output (Mute = "L")	L
92	OUT	C-F/R	Capstan Motor FWD/REV Control Signal (FWD = "L"/REW = "H")	H/L
93				
94				
95				
96				
97	OUT	FAULT-CHK	SYS-CON Mecha Error Display	H
98	OUT	LED-P	Pulse Signal for ST/END sensor	–
99	OUT	EP-H	Tape Speed EP mode = "H" output	H
100	OUT	LP/EP-H	Tape Speed LP or EP mode = "H" output	H

IC PIN FUNCTION DESCRIPTION (MODEL : E)

COMPARISON CHART OF MODELS AND MARKS

MODEL	MARK
VIP-5000HC MKII	A
VIP-5000A MKII	B
VCP-500D	C
VCP-500	D
VIP-5000LR	E
VIP-8000K MKII	F

IC6001 QSMQA0RSN023 or QSMQB0RSN023 (SERVO/SYSTEM CONTROL)

"H" ≥ 4.6, "L"≤ 0.5

Pin No.	IN/OUT	Signal Name	Function	Active Level
1	OUT	RF-SW	Video Head Switching Pulse	H/L
2	–	GRAY-H	Not Used	–
3				
4	OUT	ROTA	Color Phase Rotary Change over Signal	H/L
5				
6				
7	OUT	MESECAM-H	MESECAM mode = "H"	H
8				
9	OUT	NAP	PAL-TV mode/NTSC4.43 TV mode Switching Signal = PALTV "H" NTSC4.43 "L"	H/L
10	OUT	PAL-H	PAL mode = "H"	H
11	OUT	PAL/NTSC	PAL/NTSC mode Switching Signal (PAL = "L"/NTSC = "H")	H/L
12	OUT	D-V (B)	Dummy V-SYNC (B)	H/L
13	OUT	D-V (A)	Dummy V-SYNC (A)	H/L
14				
15	OUT	P-ON-L	Power-on Instruction Signal (P-ON = "L")	L
16	OUT	P-ON-H	Power-on Instruction Signal (P-ON = "H")	H
17				
18				
19	OUT	A-MUTE-H	Audio Mute Output (Mute = "H")	H
20	OUT	D-PB-L	Video/Audio Playback Instruction Signal (Playback = "L")	L
21	OUT	TV/VCR	RF CONV. ON/OFF Signal	H
22	IN	CAS-SW	Cassette IN/OUT Detector (IN/OUT Rotation = "H")	H
23	IN	LD-C	Loading Position Detector	H/L
24	IN	LD-A	Loading Position Detector	H/L
25	IN	LD-B	Loading Position Detector	H/L
26	IN	LD-D	Loading Position Detector	H/L
27	OUT	D-REC	Video/Audio Recording Instruction Signal (Recording = "H")	H
28	OUT	D-PB-H	Video/Audio Playback Instruction Signal (Playback = "H")	H
29	OUT	LD-FWD	Loading Motor Forward Control Output (Forward/Stop = "H")	H
30	OUT	LD-REV	Loading Motor Reverse Control Output (Reverse/Stop = "H")	H
31	OUT	FF-IND	FF Mode Display Output	L
32	OUT	PLAY-IND	PLAY Mode Display Output	L
33	OUT	REW-IND	REW mode Display Output	L
34	OUT	SOFT-IND	Soft Position Mode Display Output	L

Pin No.	IN/OUT	Signal Name	Function	Active Level
35	OUT	A-REPEAT-IND	Auto Repeat Mode Display Output	L
36	OUT	Power/DEW-IND	Power-ON Mode Display Output/Dew mode Display Output (LED Flashing)	L
37	OUT	REC-IND	Rec Mode Display Output	L
38				
39				
40	IN	RESET	System Reset Signal (Usually = "H"/Reset = "L")	L
41	–	VSS	Digital Power GND	–
42	OUT	OSC	Crystal Oscillator 12 MHz	–
43	IN	OSC	Crystal Oscillator 12 MHz	–
44,				
45				
46				
47				
48	OUT	SOFT-Position	Soft Position Mode Switching Signal (Soft Position ON = "H")	H
49	IN	A/D KEY - 2	Key Scan Signal Input	–
50	IN	A/D KEY - 1	Key Scan Signal Input	–
51	OUT	DM-ON	Drum Rotation Control Signal Output (Rotation = "H")	H
52	–	A-VSS	Analog Power GND	–
53	–	V REF	Servo Reference Voltage	–
54	–	A-VDD	Analog Power Source +5V	–
55	IN	END-S	Tape END Position Detect	L
56	IN	ST-S	Tape Start Position Detect	L
57	IN	A/D KEY-3	Key Scan Signal Input	–
58	IN	T-REEL	Take up Reel Rotation Signal Input	H/L
59	IN	V-ENV	Video DC Envelope Voltage Input	–
60				
61				
62	IN	PG-DELAY	RF-SW Signal Delay Adjust Voltage Input	–
63	IN	SENS-INH	Interrupt Signals from "Start" "END" "Reel" sensor at "L"	L
64	IN	REC-SAFETY	Erasere Prevention switch	H
65	IN	DEW	Dew Sensor Position Detect	L
66	IN	C-SYNC	Composite Sync Signal Input (V-SYNC Sepa)	H
67	IN	PB-CTL	Capstan Motor Control Pulse Input at Playback Mode	–
68	IN	D-PG	Drum Pulse Generator Input	–
69	IN	D-FG	Drum Frequency Generator Input	–
70	IN	C-FG	Capstan Frequency Generator Signal Input	–
71	OUT	D-CONT	Drum Motor Control Signal	–
72	OUT	C-CONT	Capstan Motor Control Signal	–
73	OUT	CTL-GAIN	CTL Gain switching signal	H
74				
75				
76				
77	IN	CAS-S-INH	Cassette Loading Motion Inhibit by Start Sensor	L
78	IN	VCC	+5V	–
79				
80				
81				
82	OUT	C-DRIVE	Capstan Motor Drive Signal Output (Rotation = "H"/Stop = "L")	H

Pin No.	IN/OUT	Signal Name	Function	Active Level
83	–	D-H	Not Used	–
84				
85	IN	REMOCON	Remote Control Input Signal	H
86				
87				
88				
89	–	VSS	GND	–
90	IN	VDD	+5V	–
91	OUT	A-MUTE-L	Audio Mute Output (Mute = "L")	L
92	OUT	C-F/R	Capstan Motor FWD/REV Control Signal (FWD = "L"/REW = "H")	H/L
93				
94				
95				
96				
97	OUT	FAULT-CHK	SYS-CON Mecha Error Display	–
98	OUT	LED-P	Pulse Signal for ST/END sensor	–
99	OUT	EP-H	Tape Speed EP mode = "H" output	H
100	OUT	LP/EP-H	Tape Speed LP or EP mode = "H" output	H

LEAD IDENTIFICATIONS

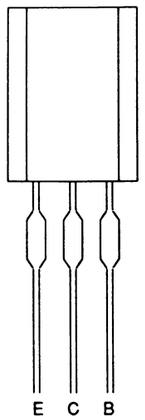

2SA1267
2SC3199
2SA608
2SA1317
2SA1346
2SC536
2SC2058
2SC2839
2SC3400
2SD400
DTA143
DTA144
KRA103M
KRC103M
KRA109M

2SC4953
2SC4418
2SC1913

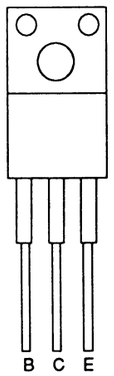

GP1S38

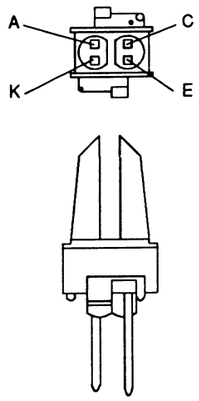

SID1K10CXM

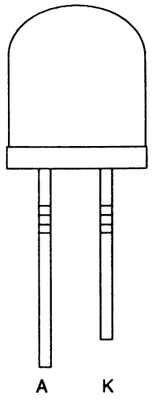

PT-380F

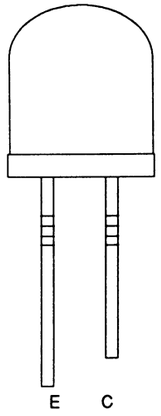

SG-211L

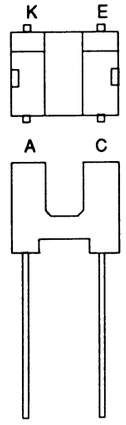

K1A6966S
TA7291S
LA1403N

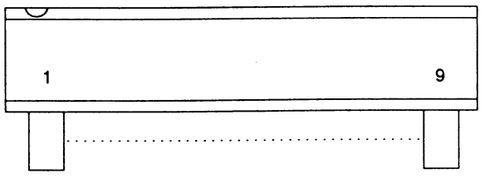

PS2501

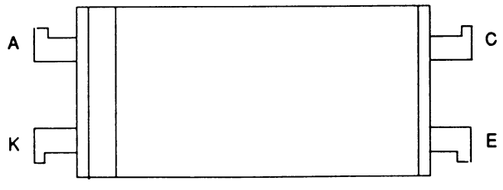

KIA7042P
PST529D

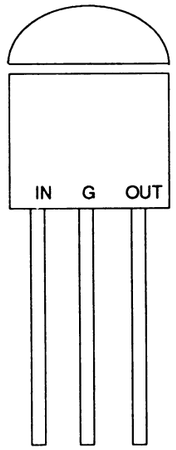

2SC3241
2SC4204

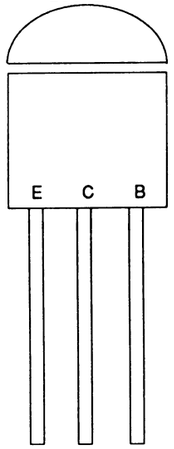

AN1431T
L5431

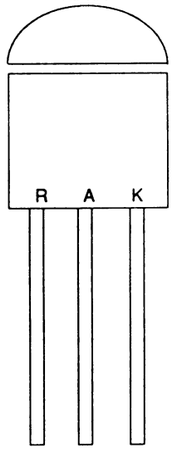

LA7383L
LA7383

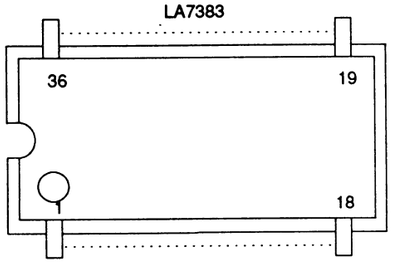

LA7311

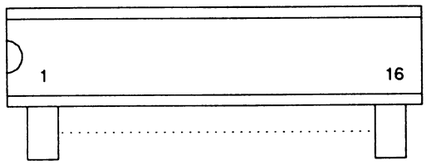

QSMQA0RSN023
QSMQB0RSN023

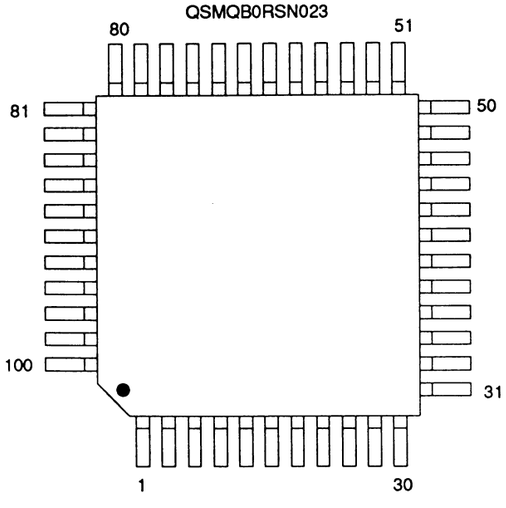

4558DD
MN3102
M3207

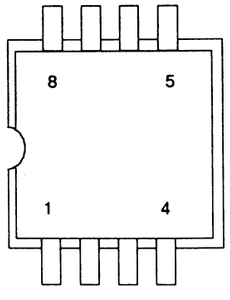

ELECTRICAL PARTS LIST

PRODUCT SAFETY NOTE: Products marked with a ⚠ have special characteristics important to safety. Before replacing any of these components, read carefully the product safety notice in this service manual. Don't degrade the safety of the product through improper servicing.

NOTE: Parts that not assigned part numbers (----------) are not available.

Tolerance of Capacitors and Resistors are noted with the following symbols.

C.....±0.25% F.....±1% J.....±5% M.....±20% Z.....+80/-20%
G.....±2% K.....±10% N.....±30%

COMPARISON CHART OF MODELS AND MARKS

MODEL	MARK
VIP-5000HC MKII	A
VIP-5000A MKII	B
VCP-500D	C
VCP-500	D
VIP-5000LR	E
VIP-8000K MKII	F

MCV CBA

Ref. No.	Description	Part No.
	MCV CBA (MODEL A)	0VSA06172
	MCV CBA (MODEL B)	0VSA06191
	MCV CBA (MODEL C)	0VSA06192
	MCV CBA (MODEL D)	0VSA06194
	MCV CBA (MODEL E)	0VSA06196
	MCV CBA (MODEL F)	0VSA06305
	Consists of (MCV A/B/C):	
	MAIN (MCV-A) CBA	----------
	LED(MCV-B) CBA	----------
	FUNCTION(MCV-C) CBA	----------

MAIN (MCV-A) CBA

Ref. No.	Description	Part No.
	MAIN (MCV-A) CBA	----------
	Consists of the following:	
	CAPACITORS	
C 1001 ⚠	METALLIZED FILM CAP. 0.047μF/250V K or	CT2E473NC004
	METALLIZED FILM CAP. 0.047μF/250V M or	CA2E473MS005
	METALLIZED FILM CAP. 0.047μF/250V K or	CT2E473NC011
	METALLIZED FILM CAP. 0.047μF/250V M	CT2E473UN009
C 1002	ELECTROLYTIC CAP. 22μF/400V M or	CA2H220NC010
	ELECTROLYTIC CAP. 22μF/400V M (VIP-5000HC MKII/VIP-5000A MKII/VIP-5000LR/VIP-8000K MKII model only)	CA2H220SP027
C 1002	ELECTROLYTIC CAP. 100μF/400V M or	CA2H101NC008
	ELECTROLYTIC CAP. 100μF/400V M or	CA2H101EA008
	ELECTROLYTIC CAP. 100μF/400V M (VCP-500D/VCP-500 model only)	CA2H101MS002
C 1003	SUMITUBE	0VM405336
C 1003 ⚠	CERAMIC CAP., SAFETY 4700pF or	1220885
	CERAMIC CAP., SAFETY E M 4700pF	CCG2HMP0E472
C 1004	SUMITUBE	0VM405336
C 1004 ⚠	CERAMIC CAP., SAFETY 4700pF or	1220885
	CERAMIC CAP., SAFETY E M 4700pF	CCG2HMP0E472

Ref. No.	Description	Part No.
C 1005	CERAMIC CAP. SL J 56pF/1KV or	CA3A560MR506
	CERAMIC CAP. SL K 56pF/1KV	CCD3AKPSL560
C 1006	CERAMIC CAP. 0.01μF/500V or	CA2J103TU001
	CERAMIC CAP. B K 0.01μF/500V	CCD2JKP0B103
C 1007	SEMICONDUCTOR CAP. SR K 0.027μF/25V	12Y2273S
C 1008	CERAMIC CAP. X K 0.0033μF/16V	3X4C332T
C 1009	CERAMIC CAP. Y K 0.0082μF/16V	3Y4C822T
C 1011	CERAMIC CAP. X K 0.0047μF/16V	3X4C472T
C 1012	ELECTROLYTIC CAP. 470μF/16V M	126C477S
C 1013	ELECTROLYTIC CAP. 470μF/16V M (VIP-5000HC MKII/VIP-5000A MKII/VCP-500D/VCP-500 model only)	126C477
C 1013	ELECTROLYTIC CAP. 100μF/16V M (VIP-5000LR/VIP-8000K MKII model only)	126C107
C 1014	ELECTROLYTIC CAP. 470μF/6.3V M	126A477S
C 1015	ELECTROLYTIC CAP. 1000μF/6.3V M	126A108
C 1016	SEMICONDUCTOR CAP. SR K 0.047μF/25V	12Y2473S
C 1501	ELECTROLYTIC CAP. 47μF/16V M H7	526T476S
C 1502	CERAMIC CAP. F Z 0.022μF/50V or	122Z122T
	CERAMIC CAP. F Z 0.022μF/50V (VIP-5000LR/VIP-8000K MKII model only)	1220843T
C 3001	ELECTROLYTIC CAP. 470μF/6.3V M	126A477S
C 3002	ELECTROLYTIC CAP. 100μF/16V M H7	526T107S
C 3004	CERAMIC CAP. SL J 39pF/50V (VIP-5000LR model only)	3S41390T
C 3005	CERAMIC CAP. B J 150pF/50V (VIP-5000LR model only)	3B41151T
C 3006	CERAMIC CAP. SL J 68pF/50V (VIP-5000LR model only)	3S41680T
C 3008	CARBON RES. 1/4W J 100K Ω (VIP-5000LR model only)	RCX4JATZ0101
C 3010	ELECTROLYTIC CAP. 4.7μF/25V M H7 (VIP-5000LR model only)	526U475S

Main 2/5 Schematic Diagram (MODEL: E)

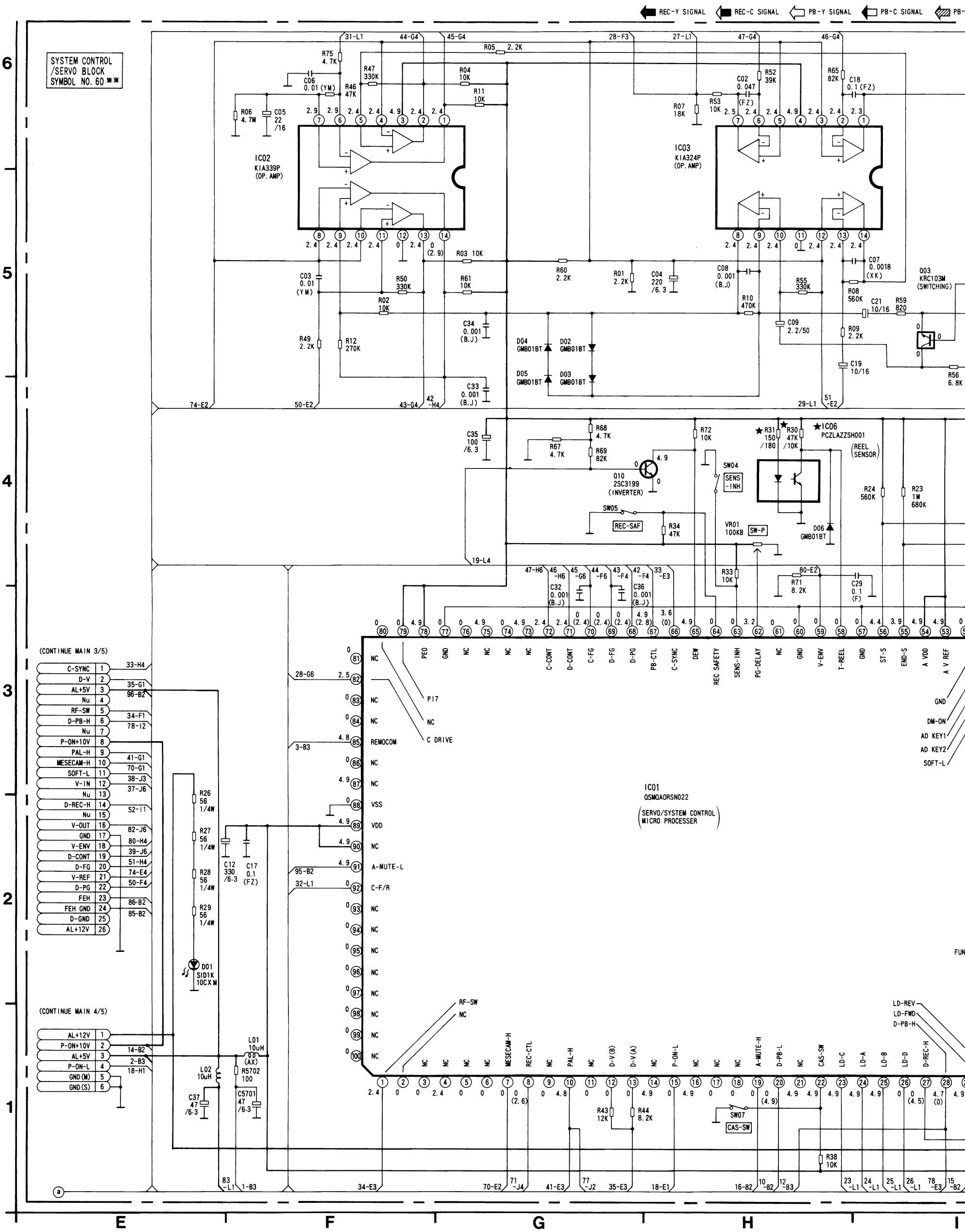

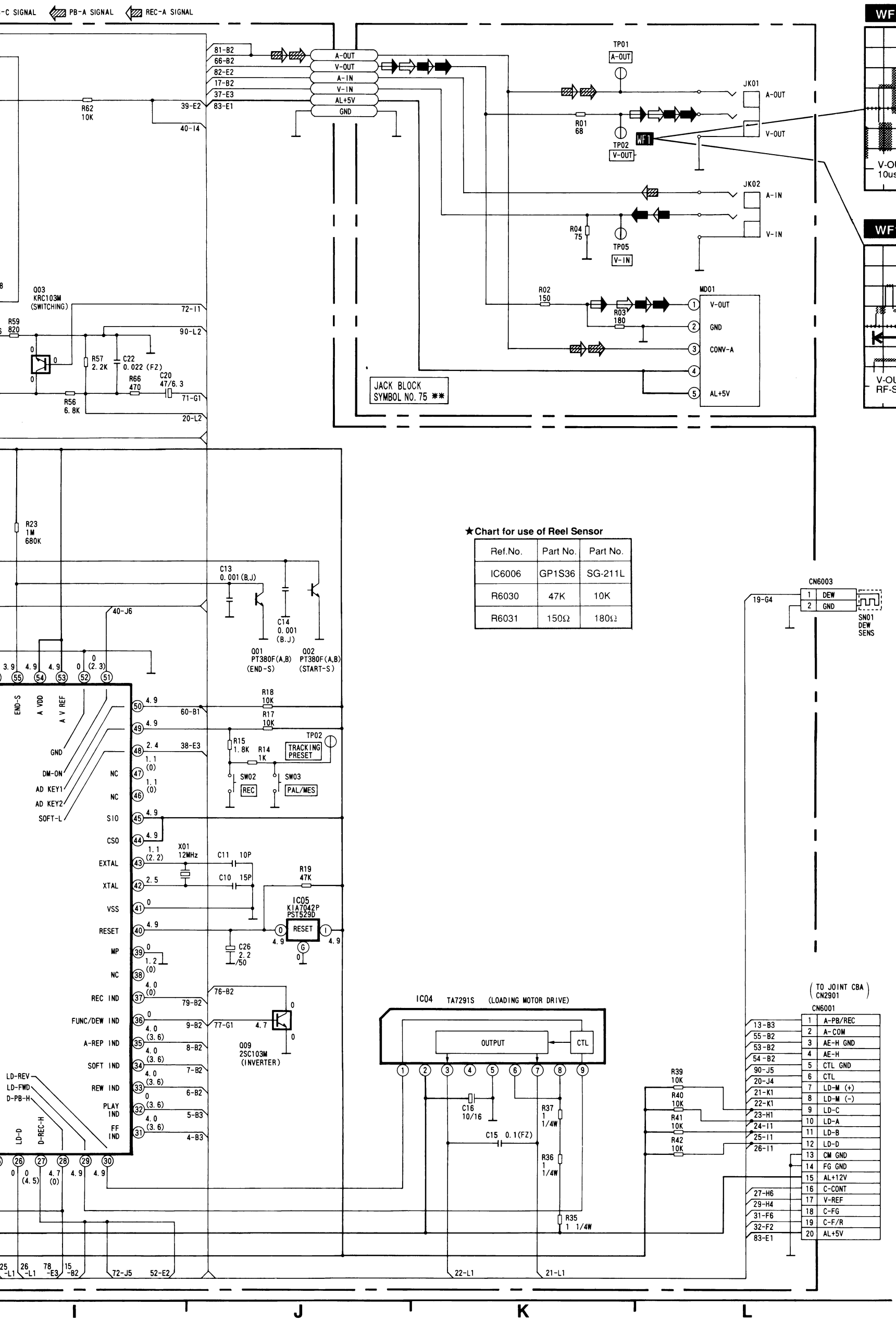

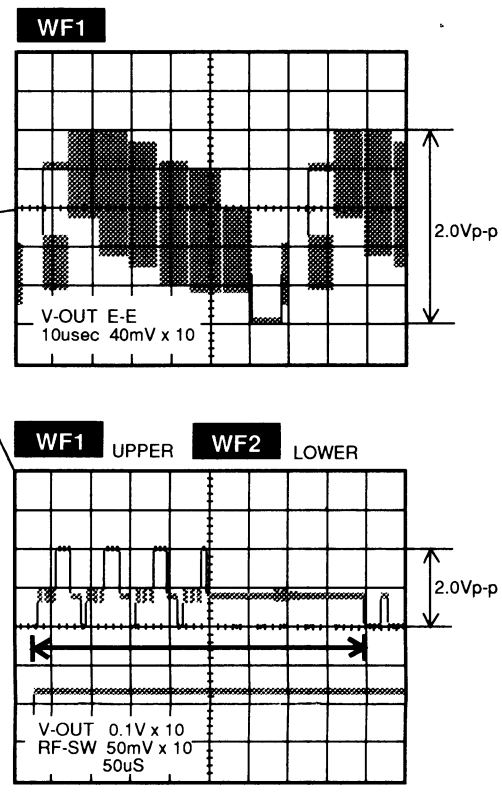

★Chart for use of Reel Sensor

Ref.No.	Part No.	Part No.
IC6006	GP1S36	SG-211L
R6030	47K	10K
R6031	150Ω	180Ω

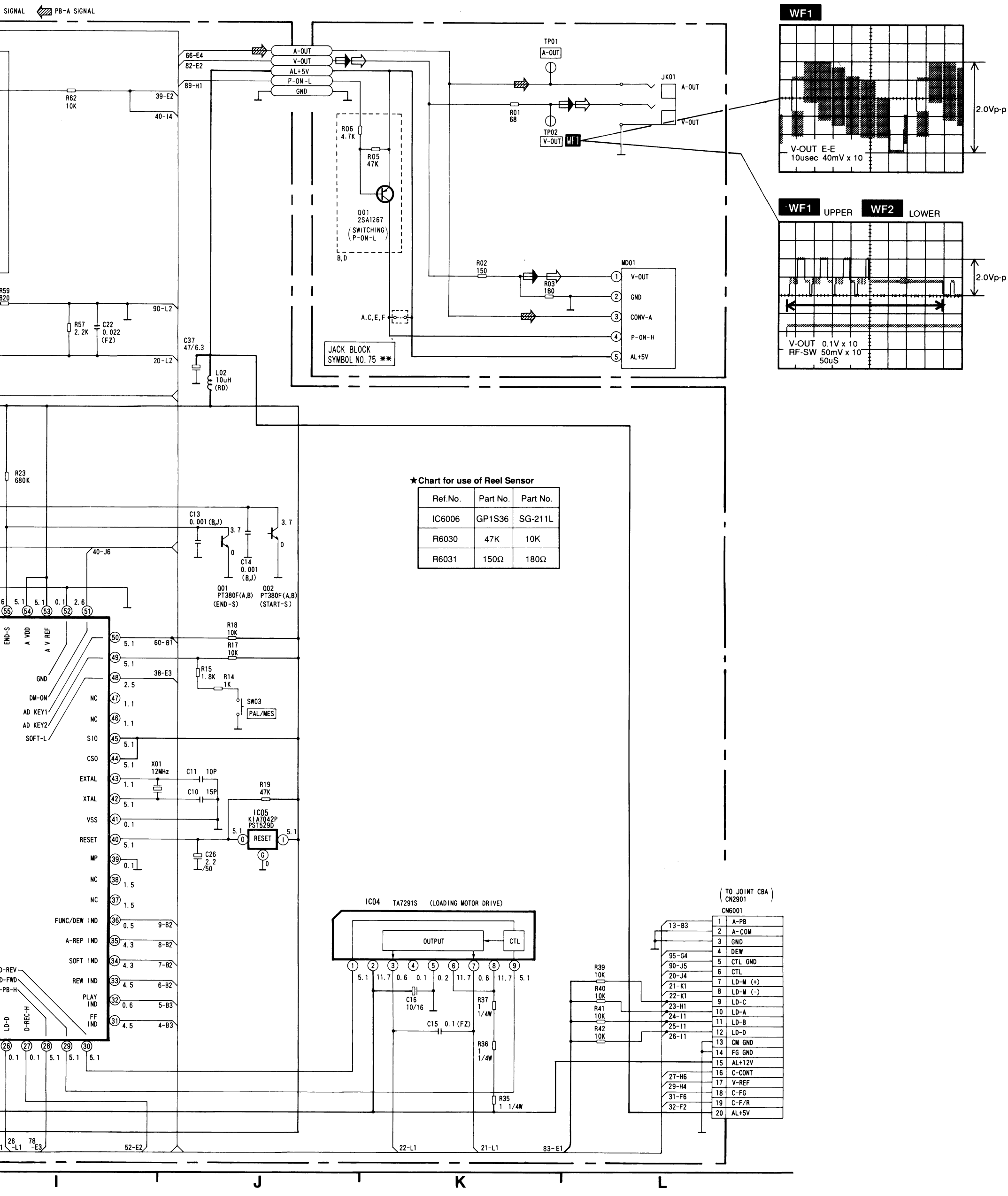

★Chart for use of Reel Sensor

Ref.No.	Part No.	Part No.
IC6006	GP1S36	SG-211L
R6030	47K	10K
R6031	150Ω	180Ω

Main 2/5 Schematic Diagram (MODELS: A, B, C, D, F)

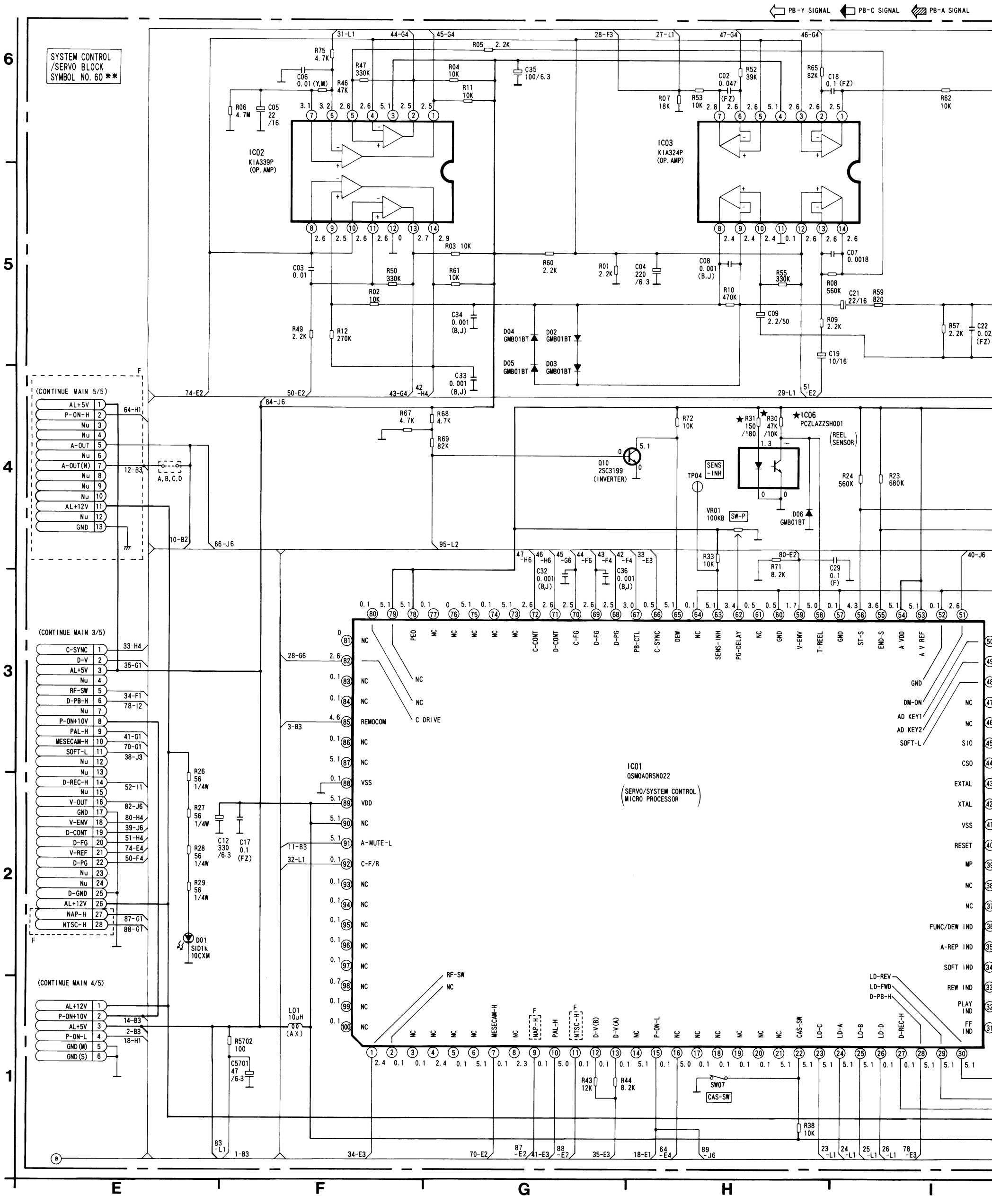

Main 3/5 Schematic Diagram (MODEL: E)

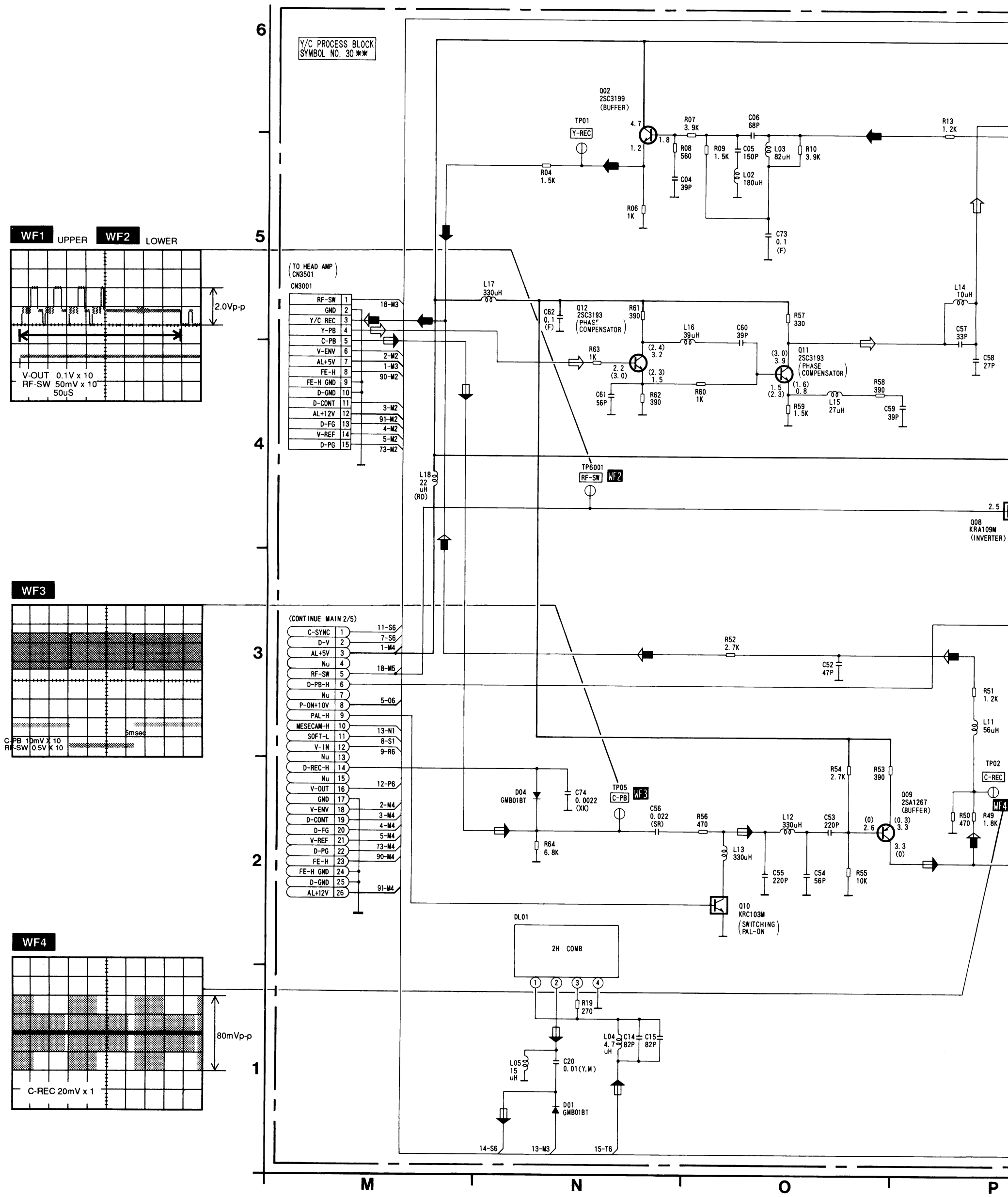

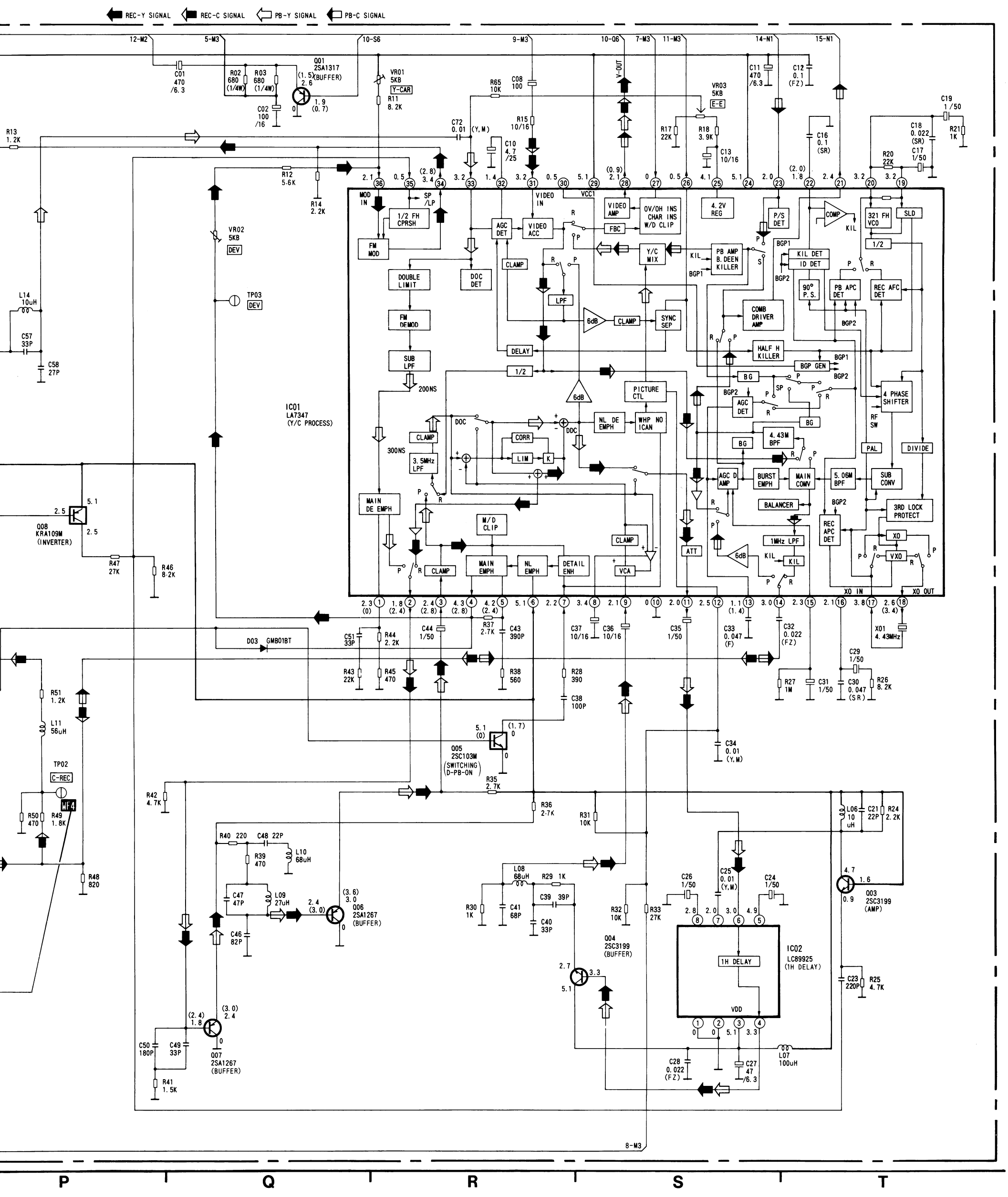
REC-Y SIGNAL
REC-C SIGNAL
PB-Y SIGNAL
PB-C SIGNAL
IC01
LA7347
(Y/C PROCESS)
IC02
LC89925
(1H DELAY)
Q01
2SA1317
(BUFFER)
Q03
2SC3199
(AMP)
Q004
2SC3199
(BUFFER)
Q005
2SC103M
(SWITCHING
D-PB-ON)
Q006
2SA1267
(BUFFER)
Q007
2SA1267
(BUFFER)
Q008
KRA109M
(INVERTER)
VR01
5KB
Y-CAR
VR02
5KB
DEV
VR03
5KB
E-E
TP02
C-REC
TP03
DEV
D03 GMB01BT
X01
4.43MHz
XO IN
XO OUT
MOD IN
SP /LP
VIDEO IN
VCC1
V-OUT
1/2 FH CPRSH
FM MOD
FM DEMOD
DOUBLE LIMIT
DOC DET
SUB LPF
AGC DET
VIDEO ACC
VIDEO AMP
FBC
OV/OH INS CHAR INS W/D CLIP
4.2V REG
P/S DET
COMP
KIL
321 FH VCO
SLD
1/2
KIL DET
ID DET
90° P.S.
PB APC DET
REC AFC DET
Y/C MIX
PB AMP B.DEEN KILLER
COMB DRIVER AMP
HALF H KILLER
BGP GEN
BG
4 PHASE SHIFTER
RF SW
PAL
DIVIDE
SUB CONV
5.06M BPF
MAIN COMV
BURST EMPH
AGC D AMP
4.43M BPF
3RD LOCK PROTECT
XO
VXO
REC APC DET
1MHz LPF
BALANCER
6dB
CLAMP
LPF
SYNC SEP
DELAY
PICTURE CTL
NL DE EMPH
WHP NO ICAN
CORR
LIM
K
3.5MHz LPF
MAIN DE EMPH
M/D CLIP
MAIN EMPH
NL EMPH
DETAIL ENH
VCA
ATT
DOC
DDC
200NS
300NS
1H DELAY
VDD
R13 1.2K
R12 5.6K
R14 2.2K
R51 1.2K
L11 56uH
R50 470
R49 1.8K
R48 820
R47 27K
R46 8.2K
L14 10uH
C57 33P
C58 27P
R42 4.7K
R41 1.5K
R40 220
C48 22P
R39 470
L10 68uH
C47 47P
L09 27uH
C46 82P
C50 180P
C49 33P
R36 2.7K
R35 2.7K
R31 10K
R30 1K
C41 68P
L08 68uH
R29 1K
C39 39P
C40 33P
R32 10K
R33 27K
C26 1/50
C25 0.01 (Y,M)
C24 1/50
C28 0.022 (FZ)
C27 47 /6.3
L07 100uH
C23 220P
R25 4.7K
L06 10 uH
C21 22P
R24 2.2K
C01 470 /6.3
R02 680 (1/4W)
R03 680 (1/4W)
C02 100 /16
R11 8.2K
R65 10K
C08 100
C72 0.01 (Y,M)
C10 4.7 /25
R15 10/16
R17 22K
R18 3.9K
C13 10/16
C11 470 /6.3
C12 0.1 (FZ)
C16 0.1 (SR)
C19 1/50
C18 0.022 (SR)
C17 1/50
R21 1K
R20 22K
C51 33P
R44 2.2K
C44 1/50
R37 2.7K
C43 390P
R43 22K
R45 470
R38 560
R28 390
C38 100P
C37 10/16
C36 10/16
C35 1/50
C33 0.047 (F)
C32 0.022 (FZ)
C34 0.01 (Y,M)
R27 1M
C31 1/50
C29 1/50
C30 0.047 (SR)
R26 8.2K
8-M3
12-M2
5-M3
10-S6
9-M3
10-Q6
7-M3
11-M3
14-N1
15-N1
P
Q
R
S
T

V2004

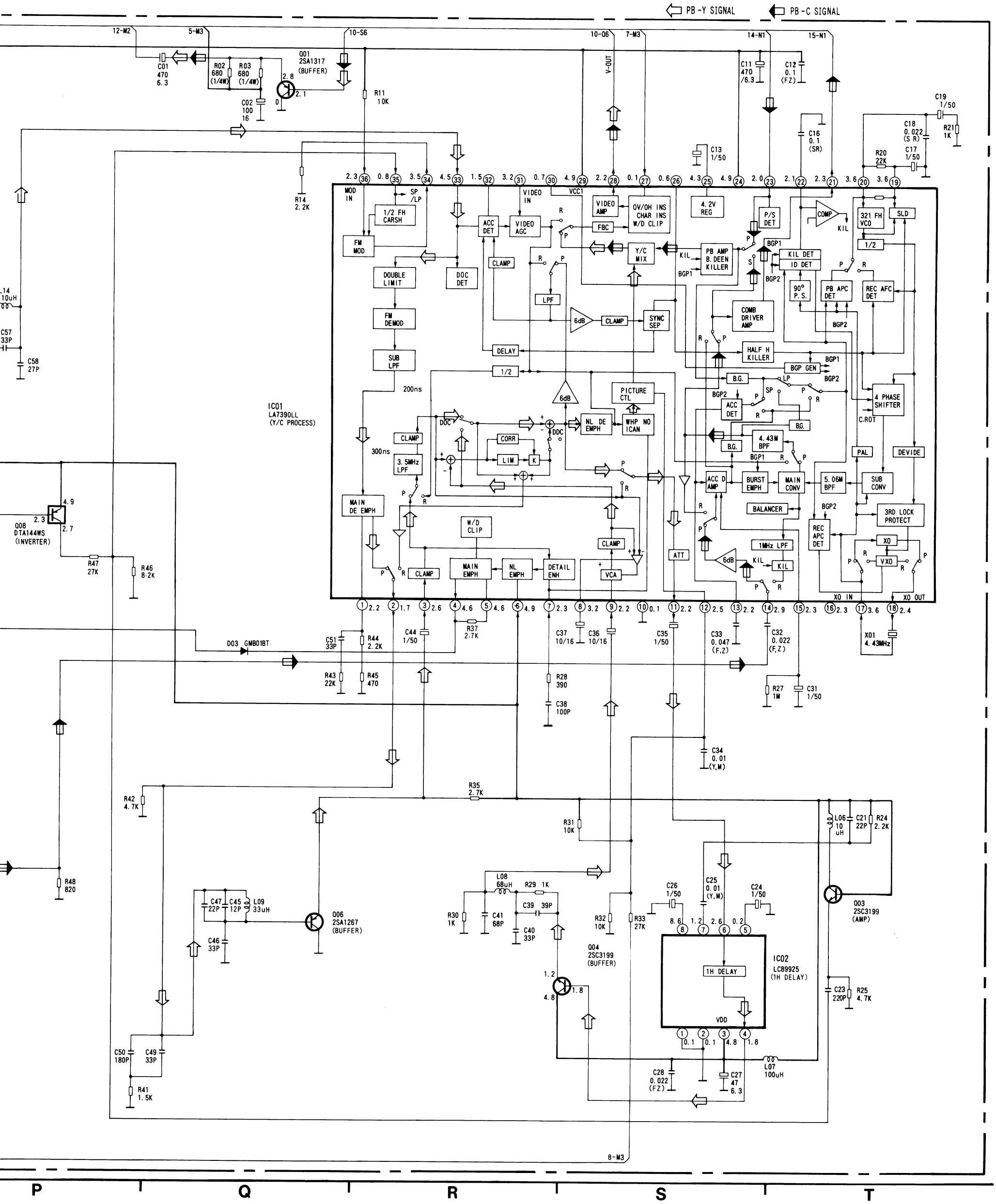
PB-Y SIGNAL
PB-C SIGNAL
IC01
LA7390LL
(Y/C PROCESS)
IC02
LC89925
(1H DELAY)
Q01
2SA1317
(BUFFER)
Q08
DTA144WS
(INVERTER)
Q06
2SA1267
(BUFFER)
Q04
2SC3199
(BUFFER)
Q03
2SC3199
(AMP)
D03 GMB01BT
X01
4.43MHz
MOD IN
SP /LP
1/2 FH CARSH
FM MOD
DOUBLE LIMIT
FM DEMOD
SUB LPF
200ns
300ns
3.5MHz LPF
MAIN DE EMPH
CLAMP
DOC DET
ACC DET
VIDEO AGC
VIDEO IN
VCC1
VIDEO AMP
FBC
OV/OH INS CHAR INS W/D CLIP
4.2V REG
P/S DET
COMP
321 FH VCO
SLD
1/2
Y/C MIX
PB AMP B.DEEN KILLER
KIL DET
ID DET
90° P.S.
PB APC DET
REC AFC DET
COMB DRIVER AMP
SYNC SEP
6dB
LPF
DELAY
HALF H KILLER
BGP GEN
B.G.
PICTURE CTL
NL DE EMPH
WHP NO ICAN
CORR
LIM
K
DDC
DOC
4.43M BPF
ACC D AMP
BURST EMPH
MAIN CONV
5.06M BPF
SUB CONV
4 PHASE SHIFTER
C.ROT
PAL
DEVIDE
BALANCER
3RD LOCK PROTECT
REC APC DET
XO
VXO
1MHz LPF
KIL
ATT
W/D CLIP
MAIN EMPH
NL EMPH
DETAIL ENH
VCA
XO IN
XO OUT
V-OUT
BGP1
BGP2
1H DELAY
VDD
R48 820
R47 27K
R46 8.2K
R42 4.7K
R41 1.5K
R35 2.7K
R31 10K
R30 1K
R32 10K
R33 27K
R29 1K
R25 4.7K
R24 2.2K
R21 1K
R20 22K
R14 2.2K
R11 10K
R02 680 (1/4W)
R03 680 (1/4W)
R43 22K
R45 470
R44 2.2K
R37 2.7K
R28 390
R27 1M
C01 470 6.3
C02 100 16
C11 470 /6.3
C12 0.1 (FZ)
C13 1/50
C16 0.1 (SR)
C17 1/50
C18 0.022 (S R)
C19 1/50
C57 33P
C58 27P
C51 33P
C44 1/50
C37 10/16
C36 10/16
C35 1/50
C33 0.047 (F,Z)
C32 0.022 (F,Z)
C31 1/50
C38 100P
C34 0.01 (Y,M)
C25 0.01 (Y,M)
C26 1/50
C24 1/50
C23 220P
C21 22P
C47 22P
C45 12P
C46 33P
C50 180P
C49 33P
C41 68P
C40 33P
C39 39P
C28 0.022 (FZ)
C27 47 6.3
L14 10uH
L09 33uH
L08 68uH
L06 10 uH
L07 100uH
8-M3
12-M2
5-M3
10-S6
10-O6
7-M3
14-N1
15-N1
P
Q
R
S
T

Main 3/5 Schematic Diagram (MODELS: A, B, C, D)

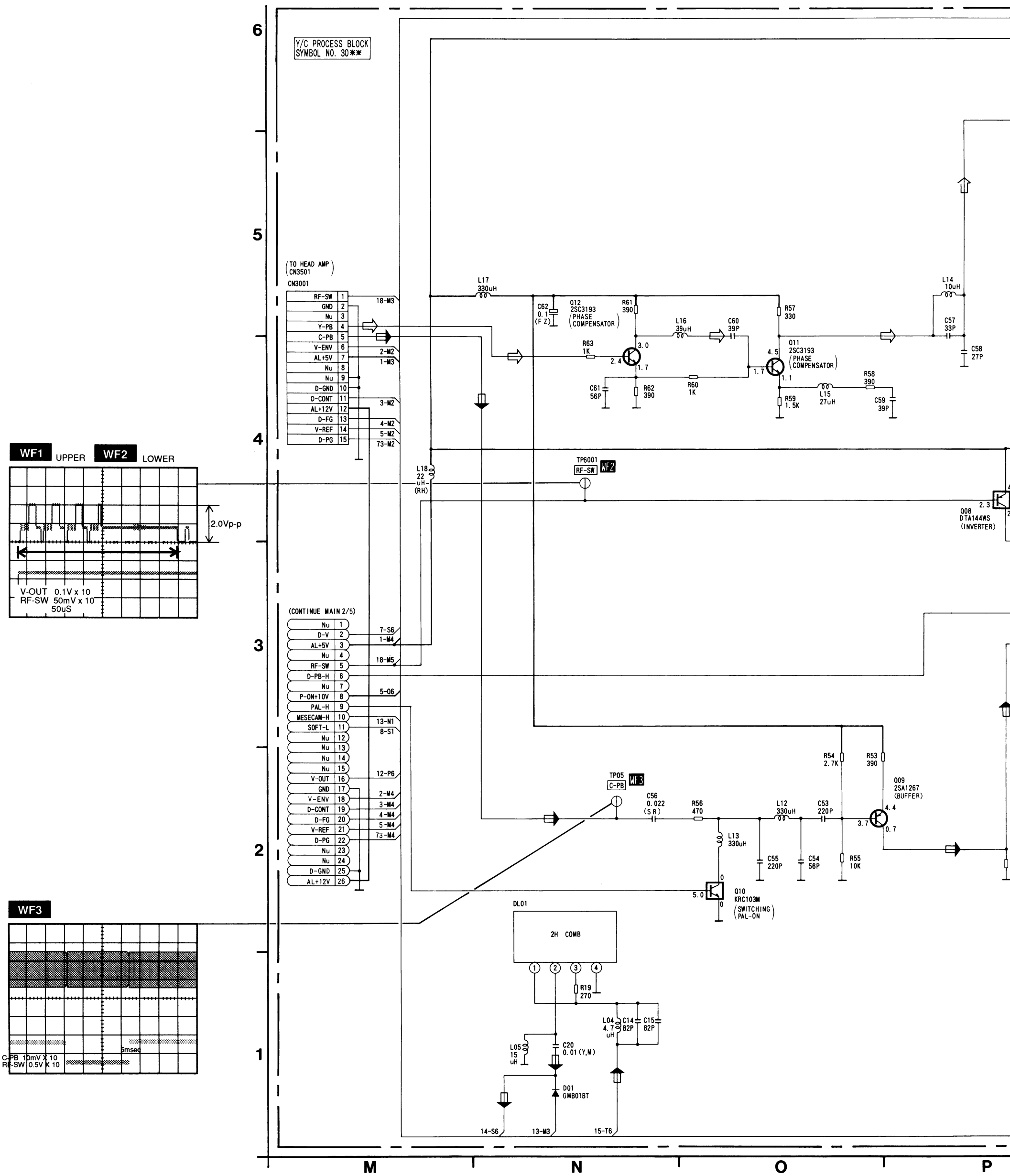

JOINT / MODE SW / ACE HEAD Schematic Diagrams

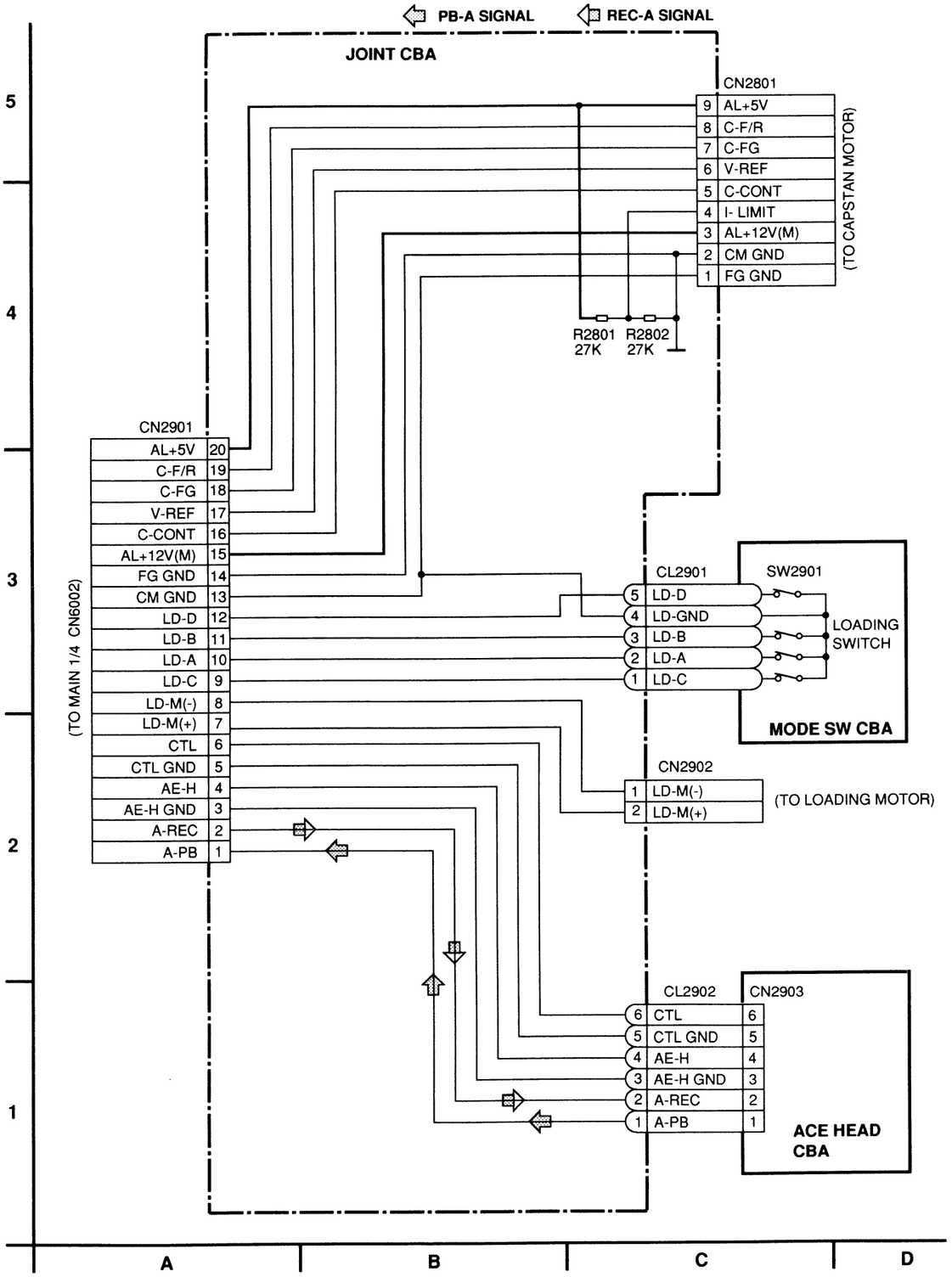

K4110SCJ

ELECTRICAL PARTS LIST

PRODUCT SAFETY NOTE: Products marked with a ⚠ have special characteristics important to safety. Before replacing any of these components, read carefully the product safety notice in this service manual. Don't degrade the safety of the product through improper servicing.

NOTE: Parts that not assigned part numbers (----------) are not available.

Tolerance of Capacitors and Resistors are noted with the following symbols.

C.....±0.25% F.....±1% J.....±5% M.....±20% Z.....+80/-20%
G.....±2% K.....±10% N.....±30%

COMPARISON CHART OF MODELS AND MARKS

MODEL	MARK
VIP-5000HC MKII	A
VIP-5000A MKII	B
VCP-500D	C
VCP-500	D
VIP-5000LR	E
VIP-8000K MKII	F

MCV CBA

Ref. No.	Description	Part No.
	MCV CBA (MODEL A)	0VSA06172
	MCV CBA (MODEL B)	0VSA06191
	MCV CBA (MODEL C)	0VSA06192
	MCV CBA (MODEL D)	0VSA06194
	MCV CBA (MODEL E)	0VSA06196
	MCV CBA (MODEL F)	0VSA06305
	Consists of (MCV A/B/C):	
	MAIN (MCV-A) CBA	----------
	LED(MCV-B) CBA	----------
	FUNCTION(MCV-C) CBA	----------

MAIN (MCV-A) CBA

Ref. No.	Description	Part No.
	MAIN (MCV-A) CBA	----------
	Consists of the following:	
	CAPACITORS	
C 1001 ⚠	METALLIZED FILM CAP. 0.047µF/250V K or	CT2E473NC004
	METALLIZED FILM CAP. 0.047µF/250V M or	CA2E473MS005
	METALLIZED FILM CAP. 0.047µF/250V K or	CT2E473NC011
	METALLIZED FILM CAP. 0.047µF/250V M	CT2E473UN009
C 1002	ELECTROLYTIC CAP. 22µF/400V M or	CA2H220NC010
	ELECTROLYTIC CAP. 22µF/400V M (VIP-5000HC MKII/VIP-5000A MKII/VIP-5000LR/VIP-8000K MKII model only)	CA2H220SP027
C 1002	ELECTROLYTIC CAP. 100µF/400V M or	CA2H101NC008
	ELECTROLYTIC CAP. 100µF/400V M or	CA2H101EA008
	ELECTROLYTIC CAP. 100µF/400V M (VCP-500D/VCP-500 model only)	CA2H101MS002
C 1003	SUMITUBE	0VM405336
C 1003 ⚠	CERAMIC CAP., SAFETY 4700pF or	1220885
	CERAMIC CAP., SAFETY E M 4700pF	CCG2HMP0E472
C 1004	SUMITUBE	0VM405336
C 1004 ⚠	CERAMIC CAP., SAFETY 4700pF or	1220885
	CERAMIC CAP., SAFETY E M 4700pF	CCG2HMP0E472

Ref. No.	Description	Part No.
C 1005	CERAMIC CAP. SL J 56pF/1KV or	CA3A560MR506
	CERAMIC CAP. SL K 56pF/1KV	CCD3AKPSL560
C 1006	CERAMIC CAP. 0.01µF/500V or	CA2J103TU001
	CERAMIC CAP. B K 0.01µF/500V	CCD2JKP0B103
C 1007	SEMICONDUCTOR CAP. SR K 0.027µF/25V	12Y2273S
C 1008	CERAMIC CAP. X K 0.0033µF/16V	3X4C332T
C 1009	CERAMIC CAP. Y K 0.0082µF/16V	3Y4C822T
C 1011	CERAMIC CAP. X K 0.0047µF/16V	3X4C472T
C 1012	ELECTROLYTIC CAP. 470µF/16V M	126C477S
C 1013	ELECTROLYTIC CAP. 470µF/16V M (VIP-5000HC MKII/VIP-5000A MKII/VCP-500D/VCP-500 model only)	126C477
C 1013	ELECTROLYTIC CAP. 100µF/16V M (VIP-5000LR/VIP-8000K MKII model only)	126C107
C 1014	ELECTROLYTIC CAP. 470µF/6.3V M	126A477S
C 1015	ELECTROLYTIC CAP. 1000µF/6.3V M	126A108
C 1016	SEMICONDUCTOR CAP. SR K 0.047µF/25V	12Y2473S
C 1501	ELECTROLYTIC CAP. 47µF/16V M H7	526T476S
C 1502	CERAMIC CAP. F Z 0.022µF/50V or	122Z122T
	CERAMIC CAP. F Z 0.022µF/50V (VIP-5000LR/VIP-8000K MKII model only)	1220843T
C 3001	ELECTROLYTIC CAP. 470µF/6.3V M	126A477S
C 3002	ELECTROLYTIC CAP. 100µF/16V M H7	526T107S
C 3004	CERAMIC CAP. SL J 39pF/50V (VIP-5000LR model only)	3S41390T
C 3005	CERAMIC CAP. B J 150pF/50V (VIP-5000LR model only)	3B41151T
C 3006	CERAMIC CAP. SL J 68pF/50V (VIP-5000LR model only)	3S41680T
C 3008	CARBON RES. 1/4W J 100K Ω (VIP-5000LR model only)	RCX4JATZ0101
C 3010	ELECTROLYTIC CAP. 4.7µF/25V M H7 (VIP-5000LR model only)	526U475S

Video (MODELS: A, B, C, D)

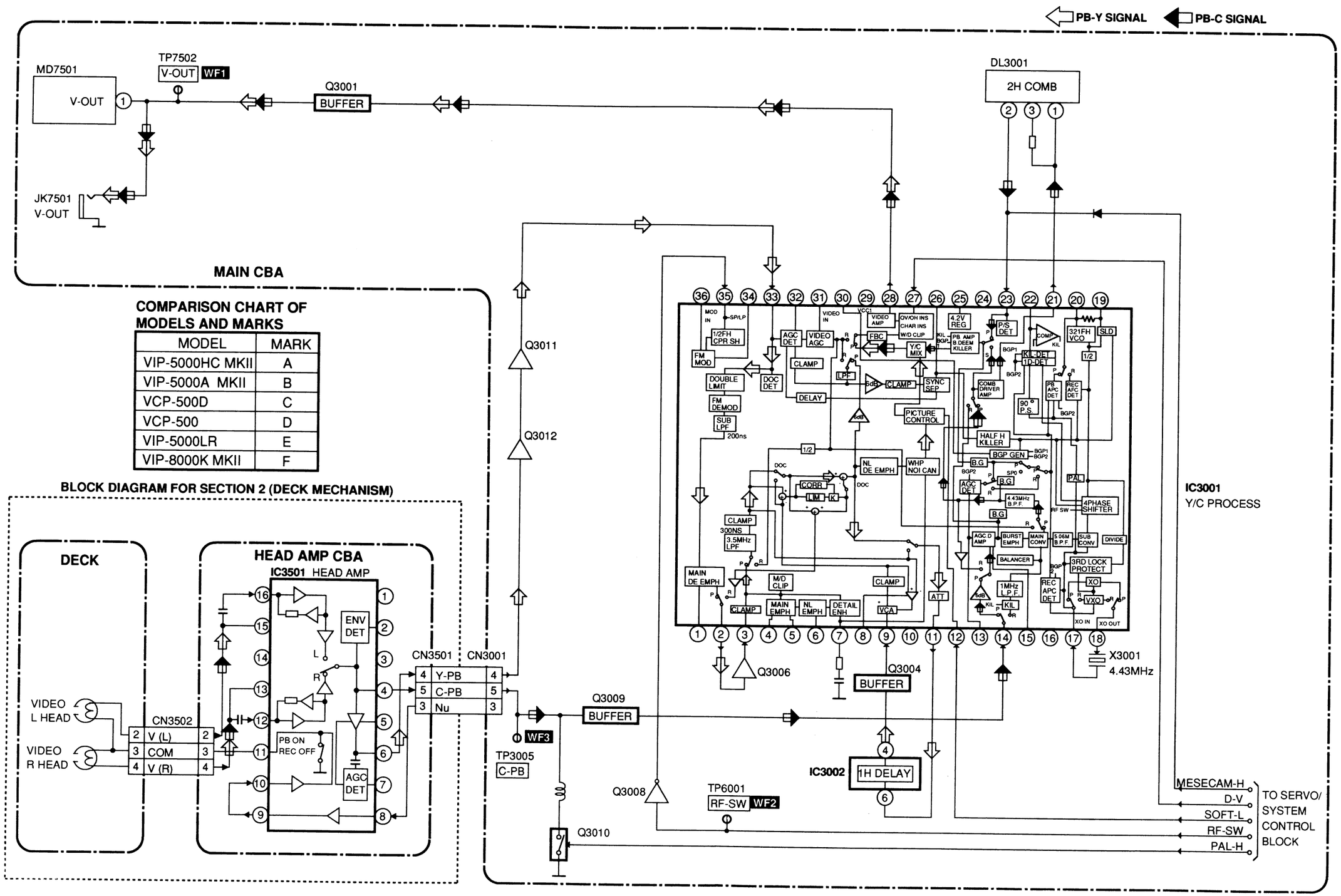

COMPARISON CHART OF MODELS AND MARKS

MODEL	MARK
VIP-5000HC MKII	A
VIP-5000A MKII	B
VCP-500D	C
VCP-500	D
VIP-5000LR	E
VIP-8000K MKII	F

Video (MODEL: E)

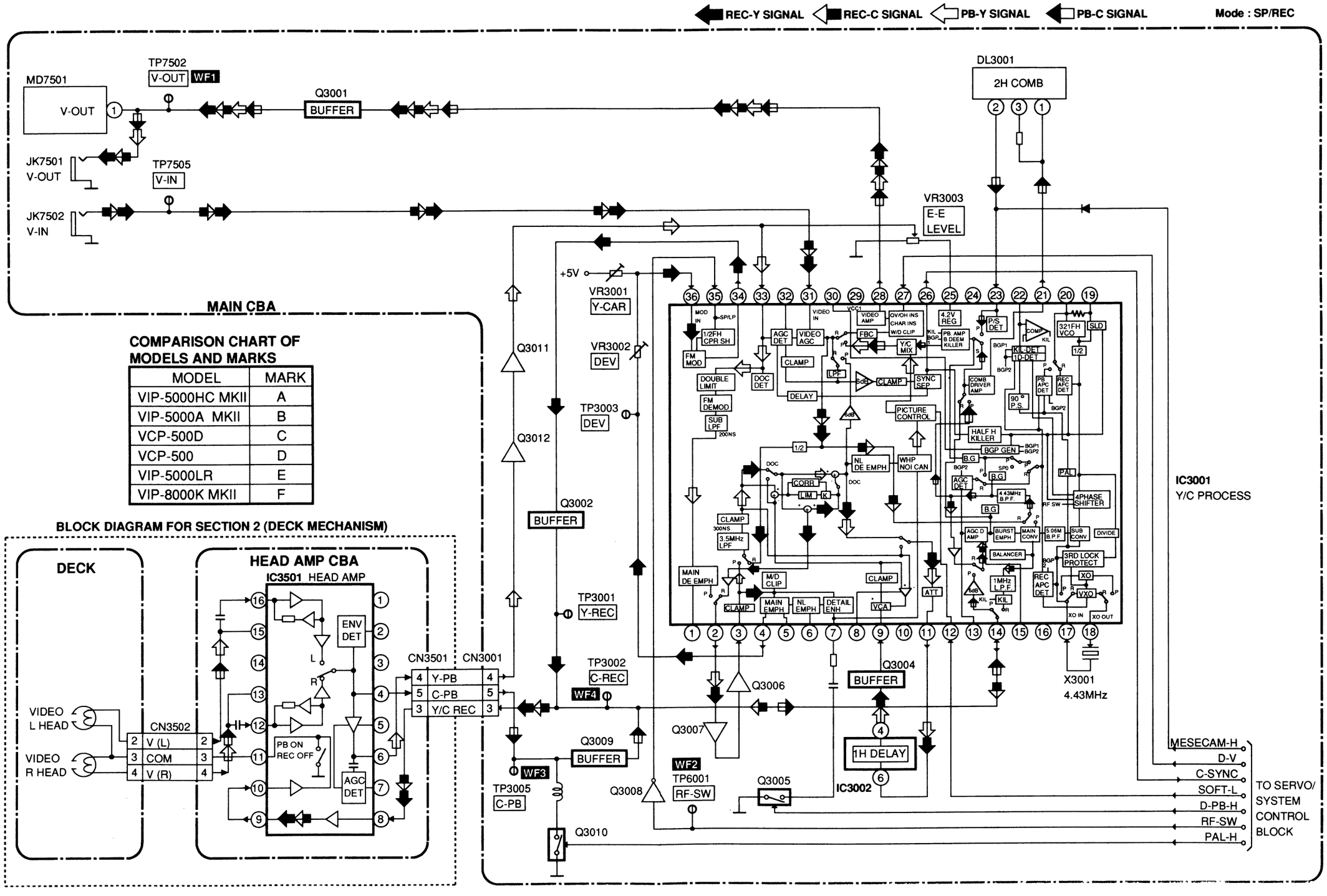

V2004BLV

SCHEMATIC DIAGRAMS / CBA'S AND TEST POINTS

Main 1/5 Schematic Diagram (MODELS: A, B, C, D, F)

COMPARISON CHART OF MODELS AND TYPES

MODEL	MARK
VIP-5000HC MKII	A
VIP-5000A MKII	B
VCP-500D	C
VCP-500	D
VIP-5000LR	E
VIP-8000K MKII	F

USE EITHER TYPE A OR TYPE B.

	IC5702	R5729	R5731	R5727	C5704	C5705
TYPE A	KIA6966S	NOT USED	270K	NOT USED	0.47u/50V	4.7u/25V
TYPE B	LB1403N	180K	NOT USED	10K	10u/16V	SHORT

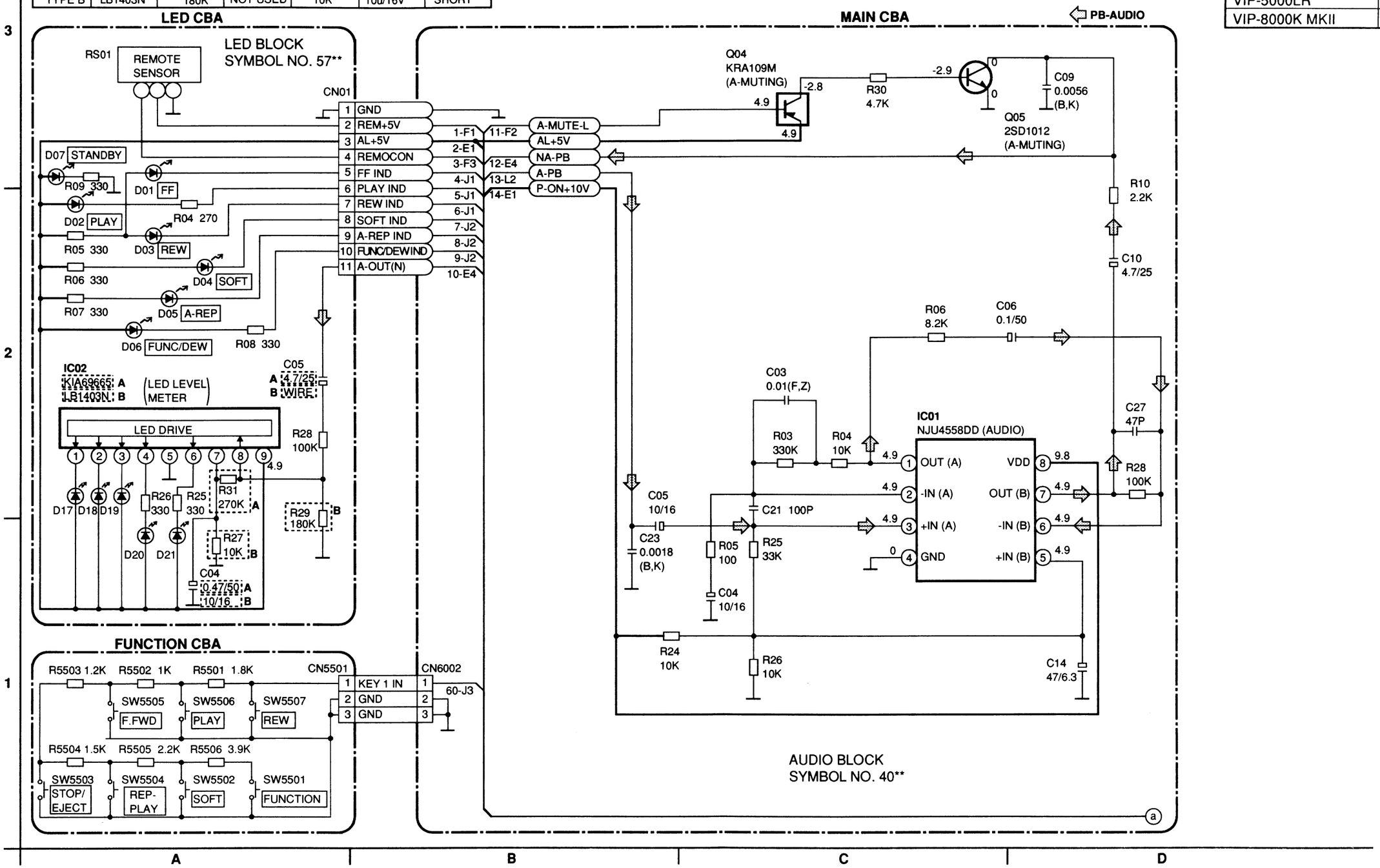

Main 1/5 Schematic Diagram (MODEL: E)

COMPARISON CHART OF MODELS AND MARKS

MODEL	MARK	MODEL	MARK
VIP-5000HC MKII	A	VCP-500	D
VIP-5000A MKII	B	VIP-5000LR	E
VCP-500D	C	VIP-8000K MKII	F

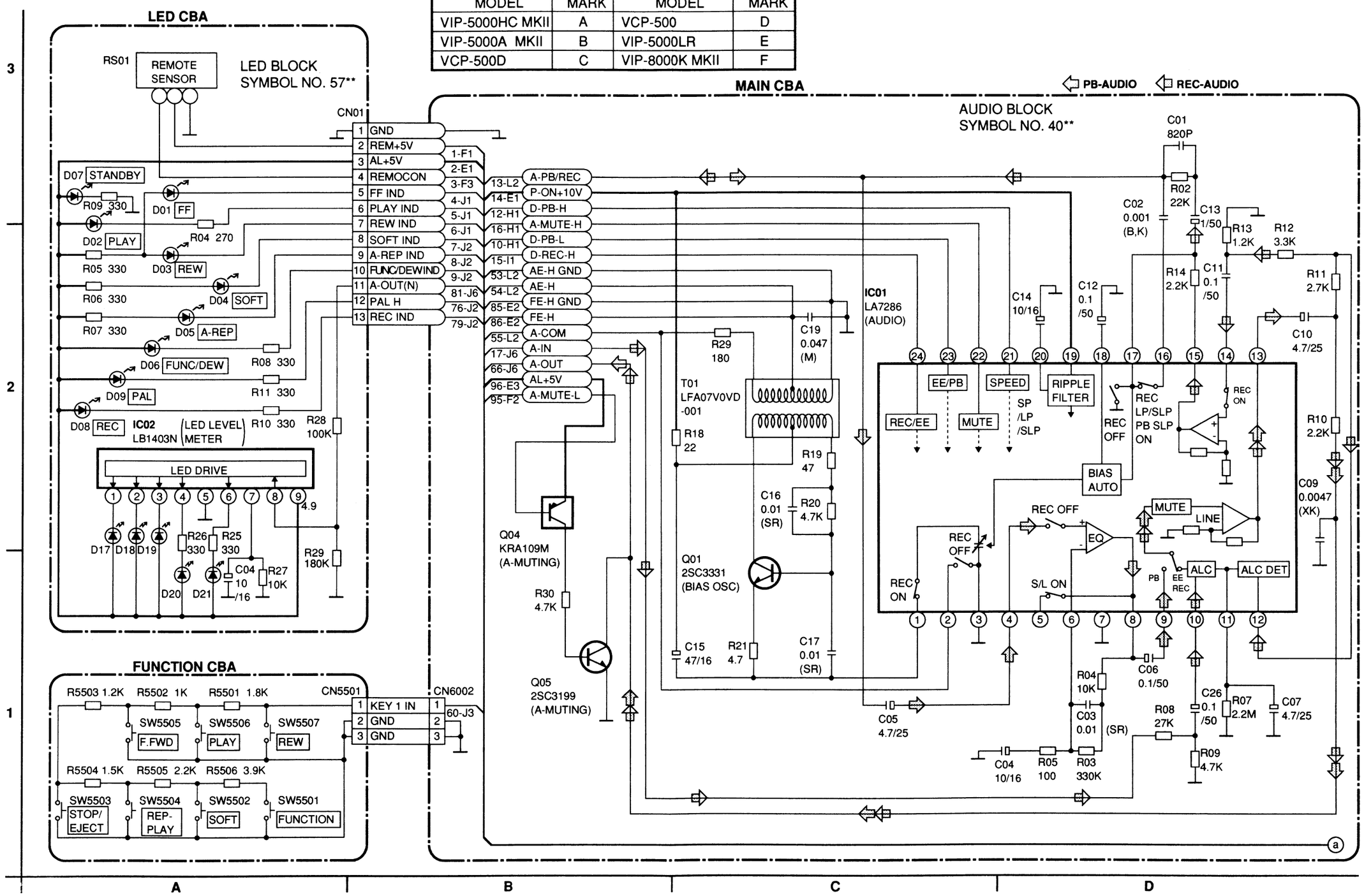

V2004SCM1

Audio (MODELS: A, B, C, D, F)

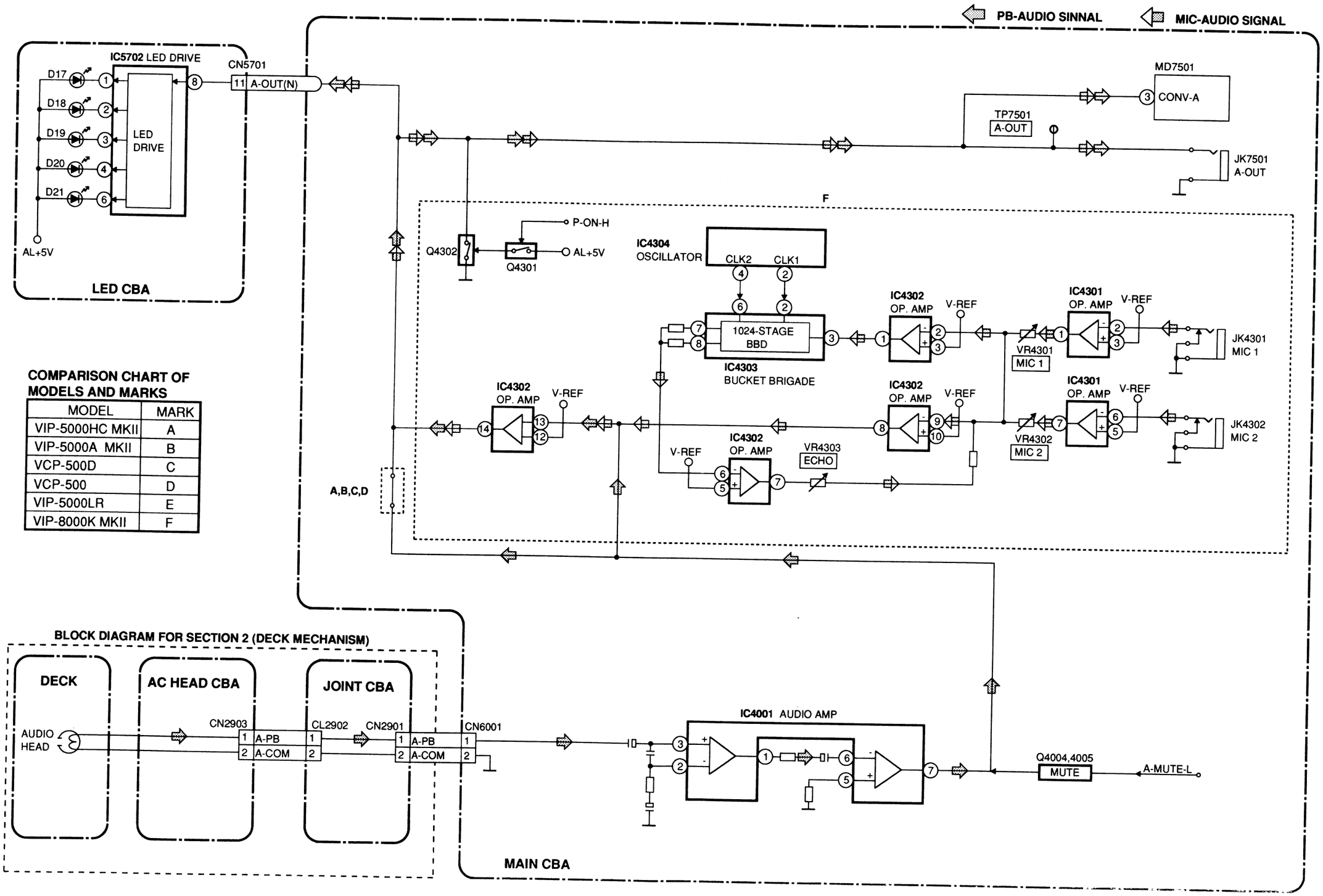

COMPARISON CHART OF MODELS AND MARKS

MODEL	MARK
VIP-5000HC MKII	A
VIP-5000A MKII	B
VCP-500D	C
VCP-500	D
VIP-5000LR	E
VIP-8000K MKII	F

Video (MODEL: F)

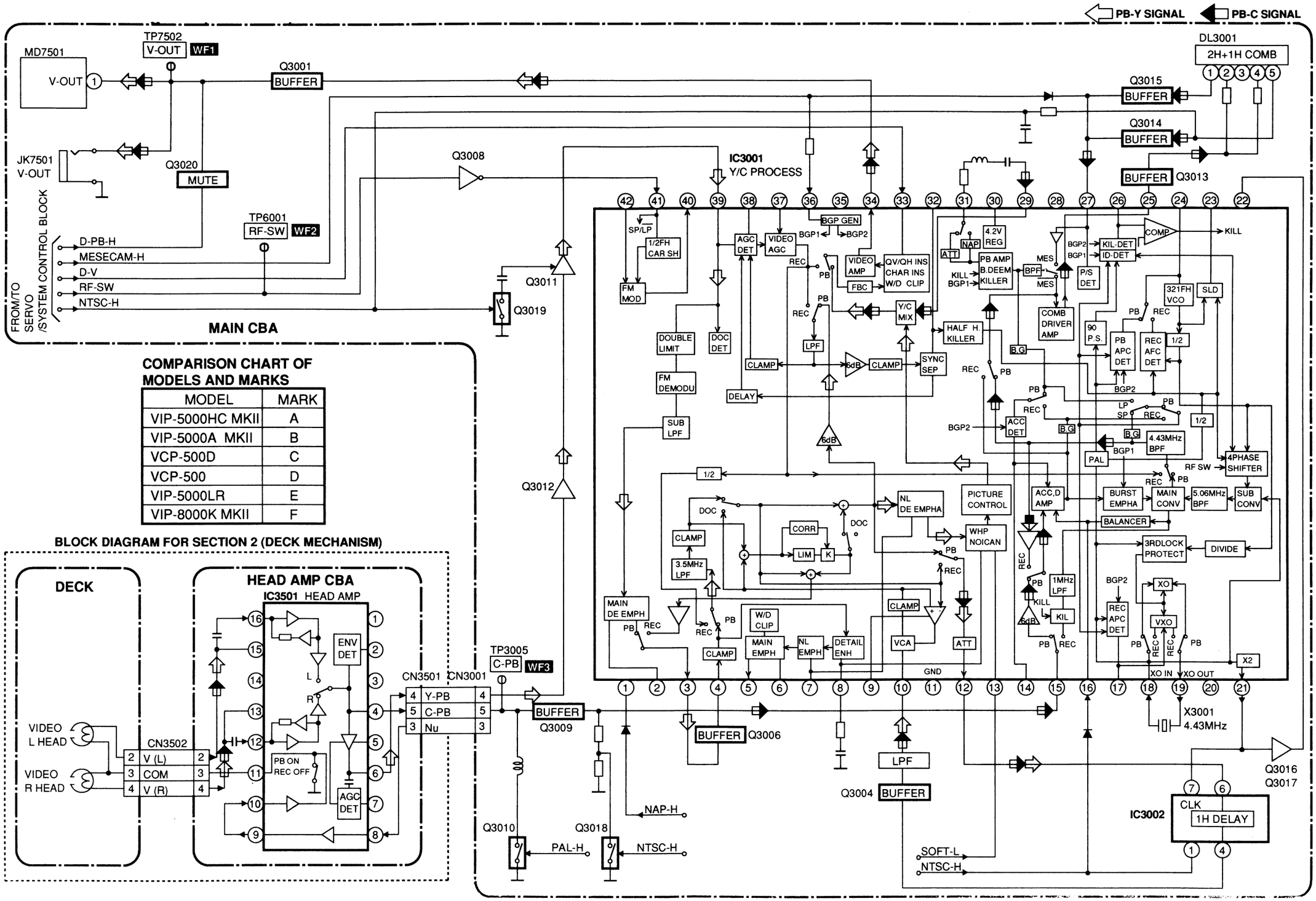

MODEL	MARK
VIP-5000HC MKII	A
VIP-5000A MKII	B
VCP-500D	C
VCP-500	D
VIP-5000LR	E
VIP-8000K MKII	F

ELECTRICAL ADJUSTMENT INSTRUCTIONS

General Note: "CBA" is an abbreviation for "Circuit Board Assembly".

NOTE:

Electrical adjustments are required after replacing circuit components and certain mechanical parts. It is important to do these adjustments only after all repairs and replacements have been completed. Also, do not attempt these adjustments unless the proper equipment is available.

Test Equipment Required

1. Oscilloscope: Dual-trace with 10:1 probe, V-Range: 0.001~50V/Div., F-Frange: AC~DC-20MHz
2. PAL Pattern Generator (color bar with 100% white)
3. AC Voltmeter (RMS)
4. Alignment Tape (F6-A, F8-A, Blank Tape)
5. Spectrum Analyzer

COMPARISON CHART OF MODELS AND MARKS

MODEL	MARK
VIP-5000HC MKII	A
VIP-5000A MKII	B
VCP-500D	C
VCP-500	D
VIP-5000LR	E

PAL Head Switching Position Adjustment

Purpose:

To determine the Head Switching point during playback.

Sympton of Misadjustment:

May cause Head Switching noise or vertical jitter in the picture.

Test Point	Adjustment Point	Mode	Input
TP7502 (V-OUT) TP6001 (RF-SW) GND	VR6001 (Switching Point) (Main CBA)	PLAY	----
Tape	**M. EQ.**	**Spec.**	
F6-A	Oscilloscope	6.5H±1H (412.7μs)	
Connections of M. EQ.			

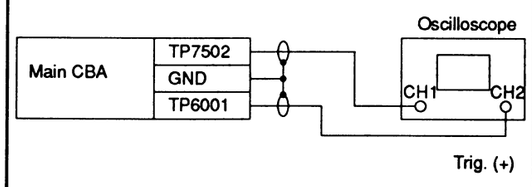

Figure

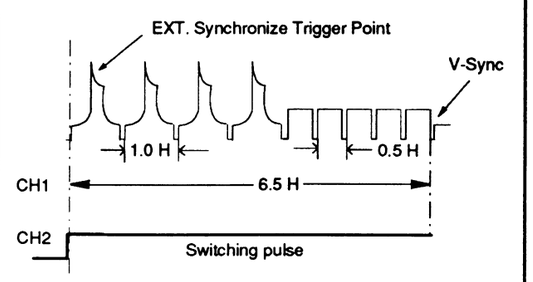

Reference Notes:

1. Connect the oscilloscope as shown in the above table.
2. Set the "PAL/MESECAM" select switch to "PAL" side.
3. Playback the test tape and adjust VR6001 so that the V-sync front edge of CH1 video output waveform is at the 6.5H(412.7μs) delayed position from the rising edge of the CH2 Head Switching Pulse waveform.

NTSC Head Switching Position Adjustment (MODEL: F)

Purpose:

To determine the Head Switching point during playback.

Sympton of Misadjustment:

May cause Head Switching noise or vertical jitter in the picture.

Test Point	Adjustment Point	Mode	Input
TP7502 (V-OUT) TP6001 (RF-SW) GND	VR6001 (Switching Point) (Main CBA)	PLAY	----
Tape	**M. EQ.**	**Spec.**	
F8-A	Oscilloscope	6.5H±1H (416μs)	
Connections of M. EQ.			

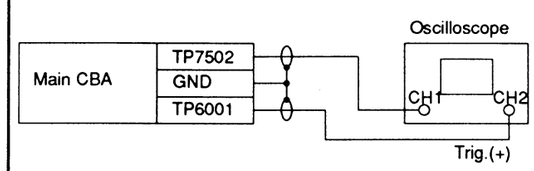

Figure

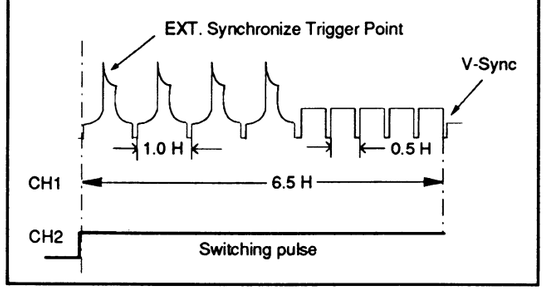

Reference Notes:

1. Connect the equipment as shown in the above table.
2. Set the "PAL/MESECAM" select switch to "PAL" side.
3. Playback the test tape and adjust VR6001 so that the V-sync front edge of CH1 video output waveform is at the 6.5H(416μs) delayed position from the rising edge of the CH2 Head Switching Pulse waveform.

V-Out Level Adjustmen (MODEL: E)

Purpose:

Set optimum luminance v-out level.

Sympton of Misadjustment:

If the v-out level is too high, TV may overload. If the level is too low, the S/N ratio deteriorates.

Test Point	Adjustment Point	Mode	Input
TP7502 (V-Out) GND	VR3003 (E-E Level) (Main CBA)	E-E	Color Bar Signal with 100% white
Tape	**M. EQ.**	**Spec.**	
-----	Pattern Generator Oscilloscope	2±0.4Vp-p	
Connections of M. EQ.			

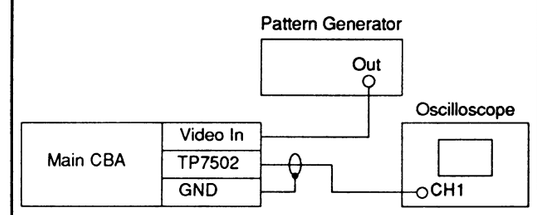

Figure

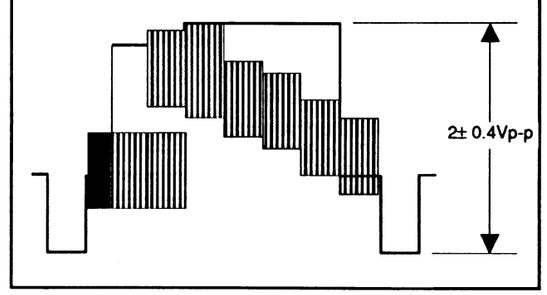

Reference Notes:

1. Connect the equipment as shown in the above table.
2. Input the color bar signal with 100% white to video input.
3. Adjust VR3003 so that the video level becomes 2±0.1Vp-p. (Connected to TV)

Audio (MODEL: E)

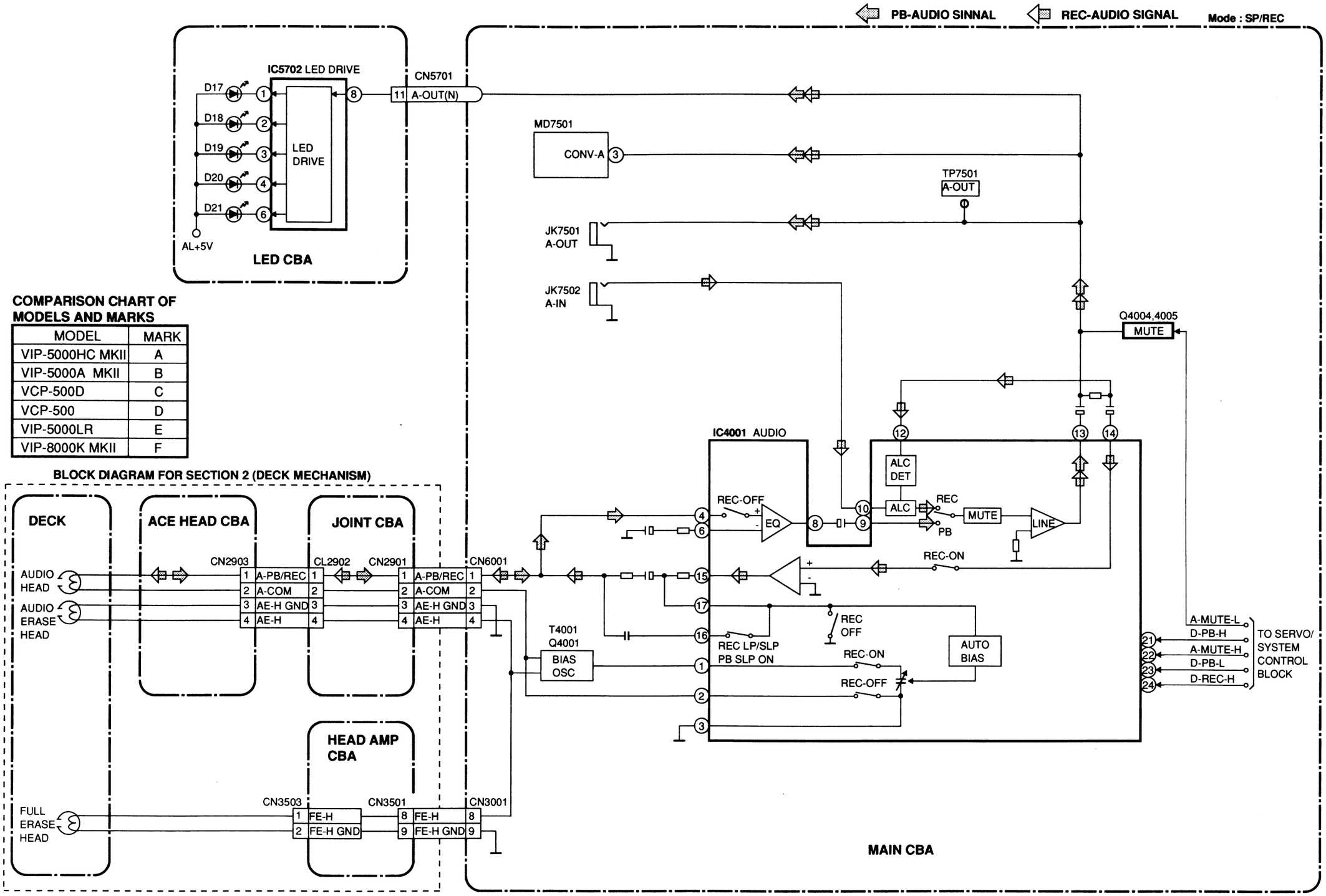

COMPARISON CHART OF MODELS AND MARKS

MODEL	MARK
VIP-5000HC MKII	A
VIP-5000A MKII	B
VCP-500D	C
VCP-500	D
VIP-5000LR	E
VIP-8000K MKII	F

SCHEMATIC DIAGRAMS and CBA'S

Standard Notes

WARNING

Many electrical and mechanical parts in this chassis have special characteristics. These characteristics often pass unnoticed and the protection afforded by them cannot necessarily be obtained by using replacement components rated for higher voltage, wattage, etc. Replacement parts that have these special safety characteristics are identified in this manual and its supplements; electrical components having such features are identified by the mark " ⚠ " in the schematic diagram and the parts list. Before replacing any of these components, read the parts list in this manual carefully. The use of substitute replacement parts that do not have the same safety characteristics as specified in the parts list may create shock, fire, or other hazards.

Capacitor Temperature Markings

Mark	Capacity change rate	Standard temperature	Temperature range
(B)	±10%	20°C	-25~+85°C
(F)	+30 -80%	20°C	-25~+85°C
(SR)	±15%	20°C	-25~+85°C
(Z)	+30 -80%	20°C	-10~+70°C

Note:

1 Do not use the part number shown on these drawings for ordering. The correct part number is shown in the parts list, and may be slightly different or amended since these drawings were prepared.

2 All resistance values are indicated in ohms ($K=10^3$, $M=10^6$).

3 Resistor wattages are 1/5W or 1/6W unless otherwise specified.

4 All capacitance values are indicated in μF ($P=10^{-6}\mu F$).

5 All voltages are DC voltages unless otherwise specified.

6 Electrical parts such as capacitors, connectors, diodes, IC's, transistors, resistors, switches, and fuses are identified by four digits. The first two digits are not shown for each component. In each block of the diagram, there is a note such as shown below to indicate these abbreviated two digits.

TUNER BLOCK SYMBOL NO. 70**

Example: "C08" in this "TUNER BLOCK" is C7008.

Capacitors and transistors are represented by the following symbols.

CBA Symbols

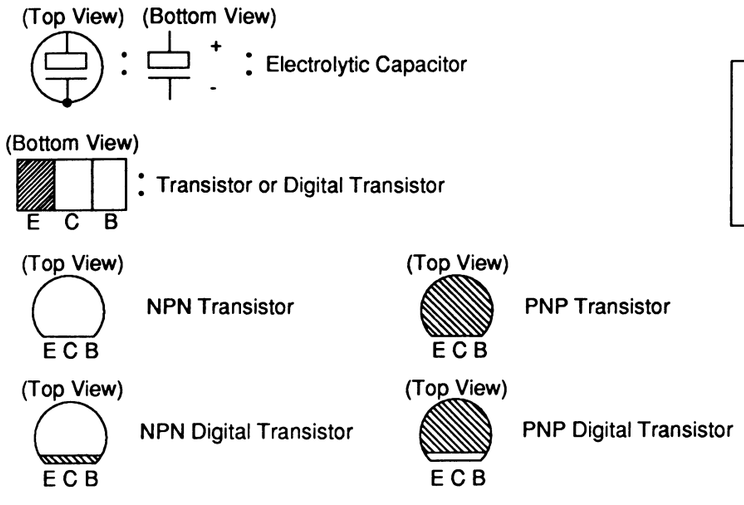

Schematic Diagram Symbols

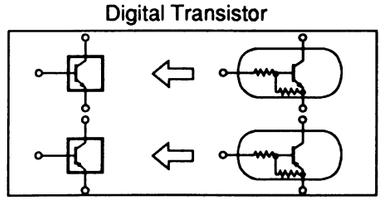

COMPARISON CHART OF MODELS AND TYPES

MODEL	MARK
VIP-5000HC MKII	A
VIP-5000A MKII	B
VCP-500D	C
VCP-500	D
VIP-5000LR	E
VIP-8000K MKII	F

Head Amp Schematic Diagram (MODELS: A, B, C, D, F)

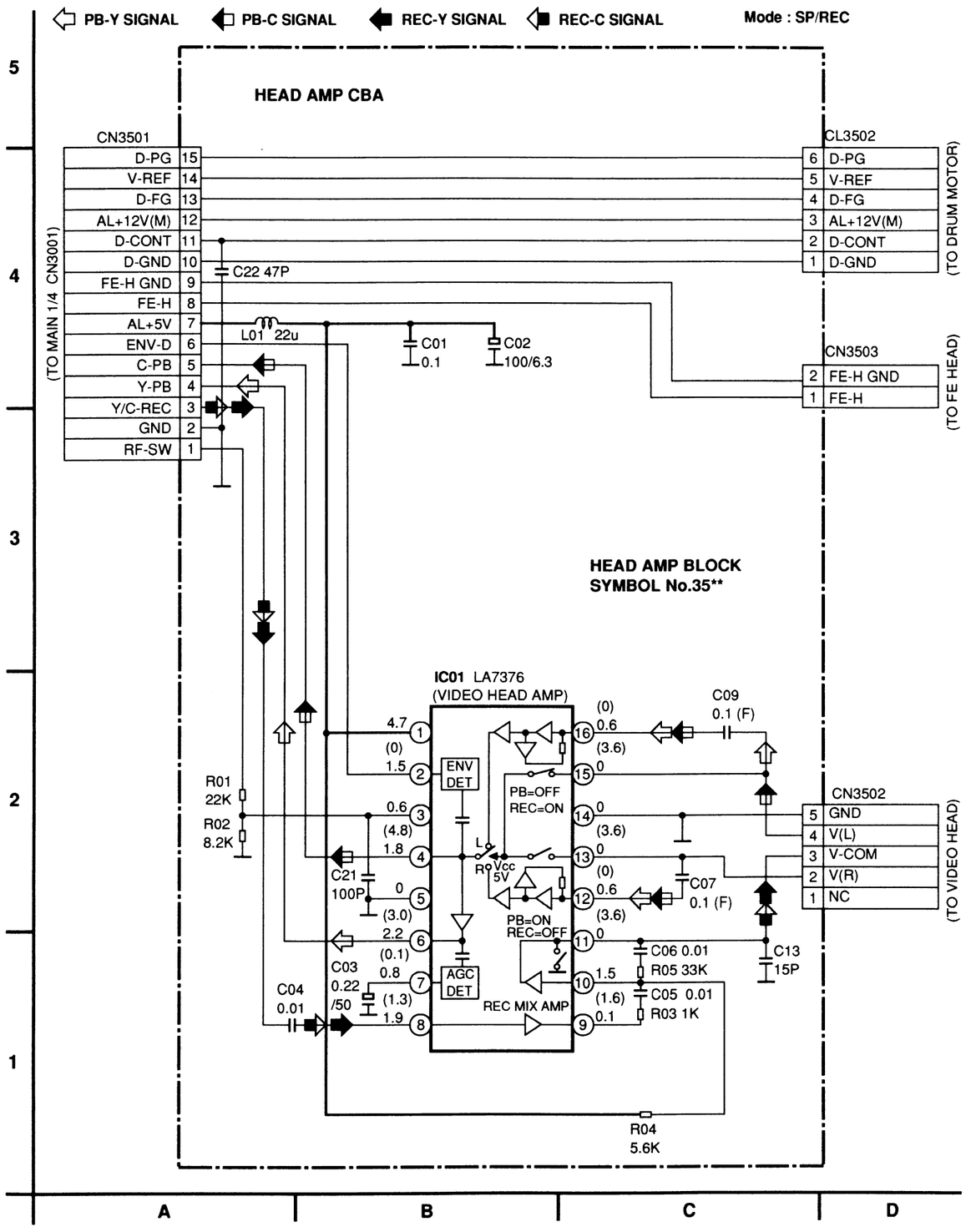

K4110SCH

Head Amp Schematic Diagram (MODELS: E)

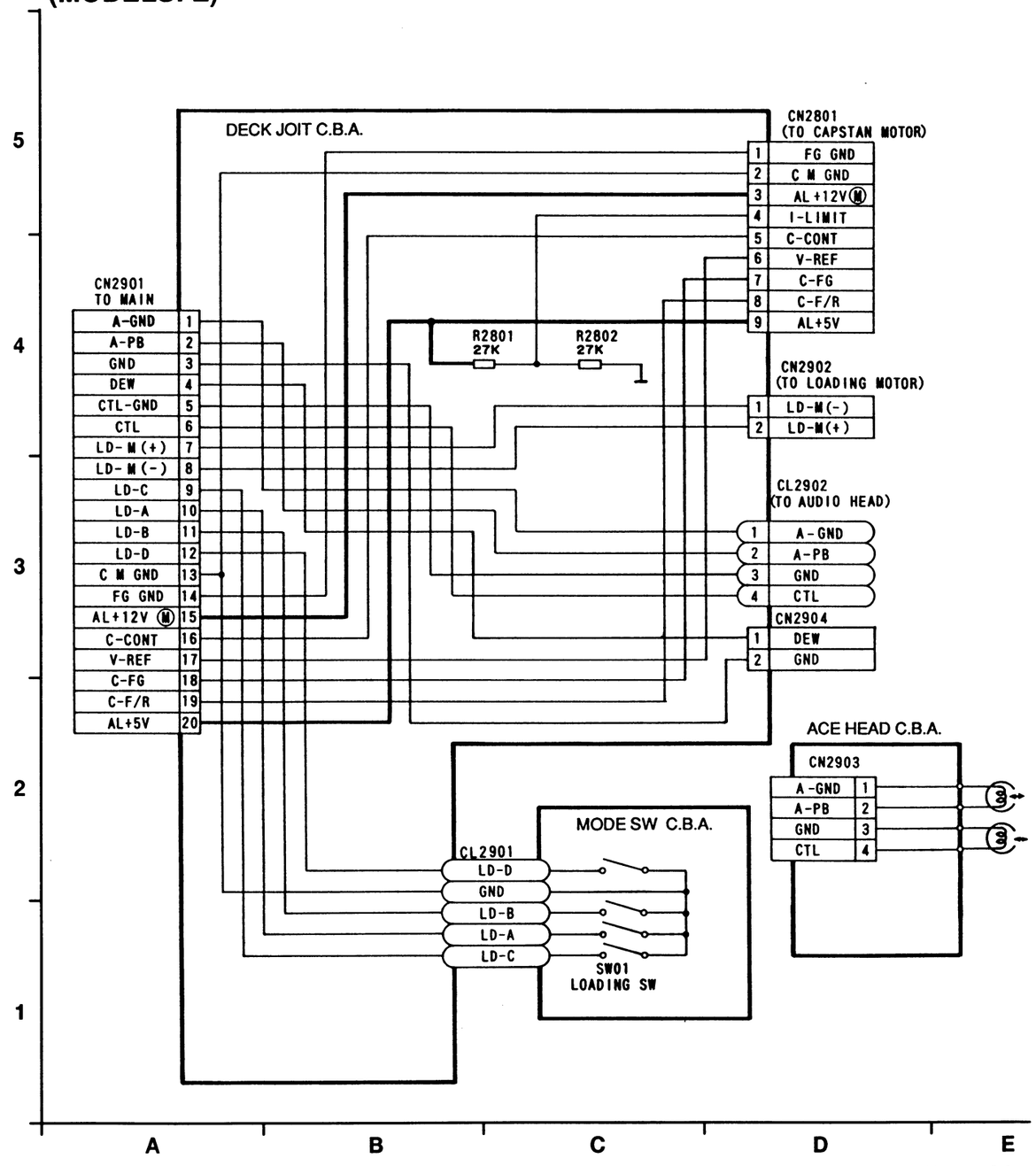

K4000-SCH

Servo/System Control (MODEL: E)

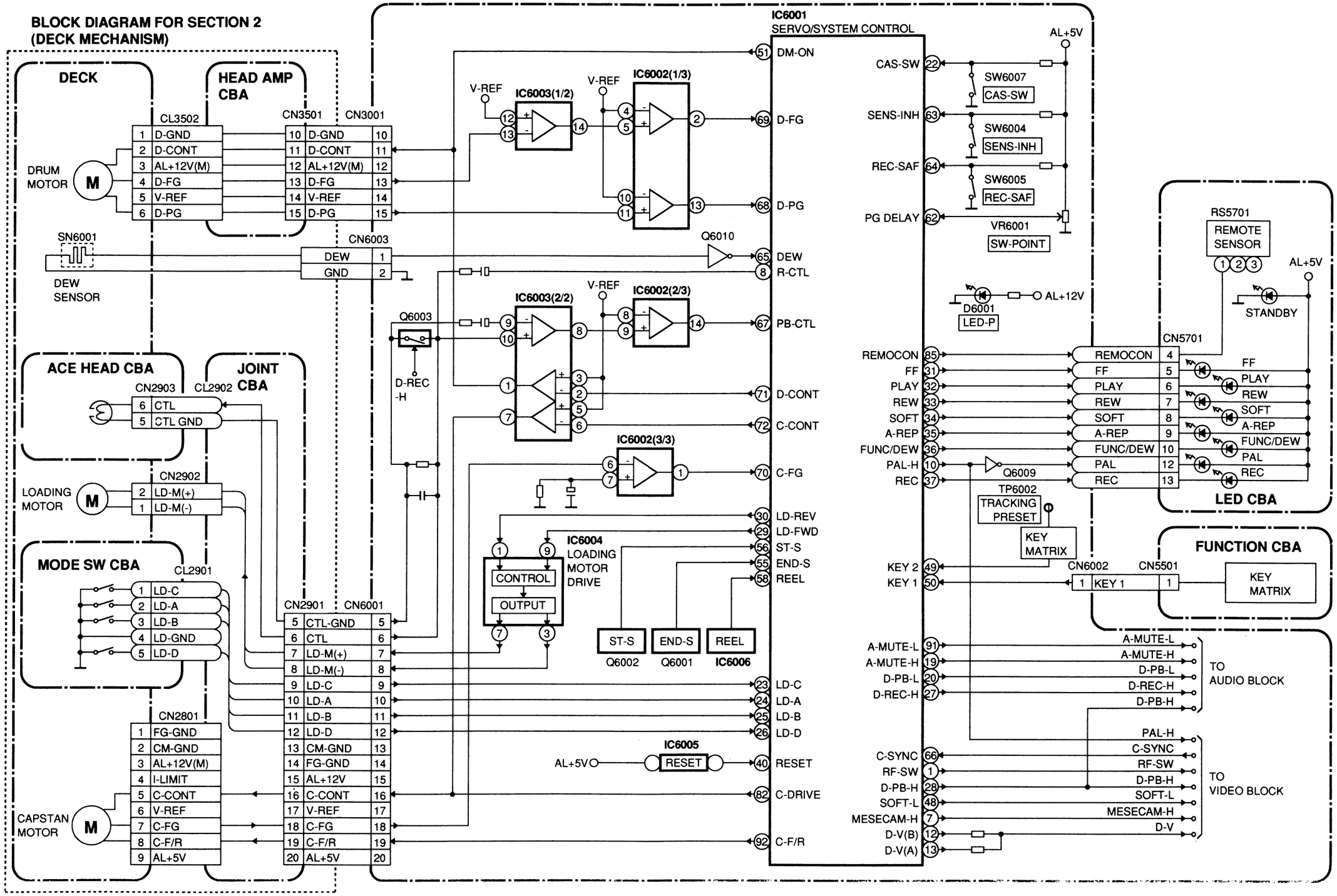

BLOCK DIAGRAMS

Servo/System Control (MODELS: A, B, C, D, F)

COMPARISON CHART OF MODELS AND TYPES

MODEL	MARK
VIP-5000HC MKII	A
VIP-5000A MKII	B
VCP-500D	C
VCP-500	D
VIP-5000LR	E
VIP-8000K MKII	F

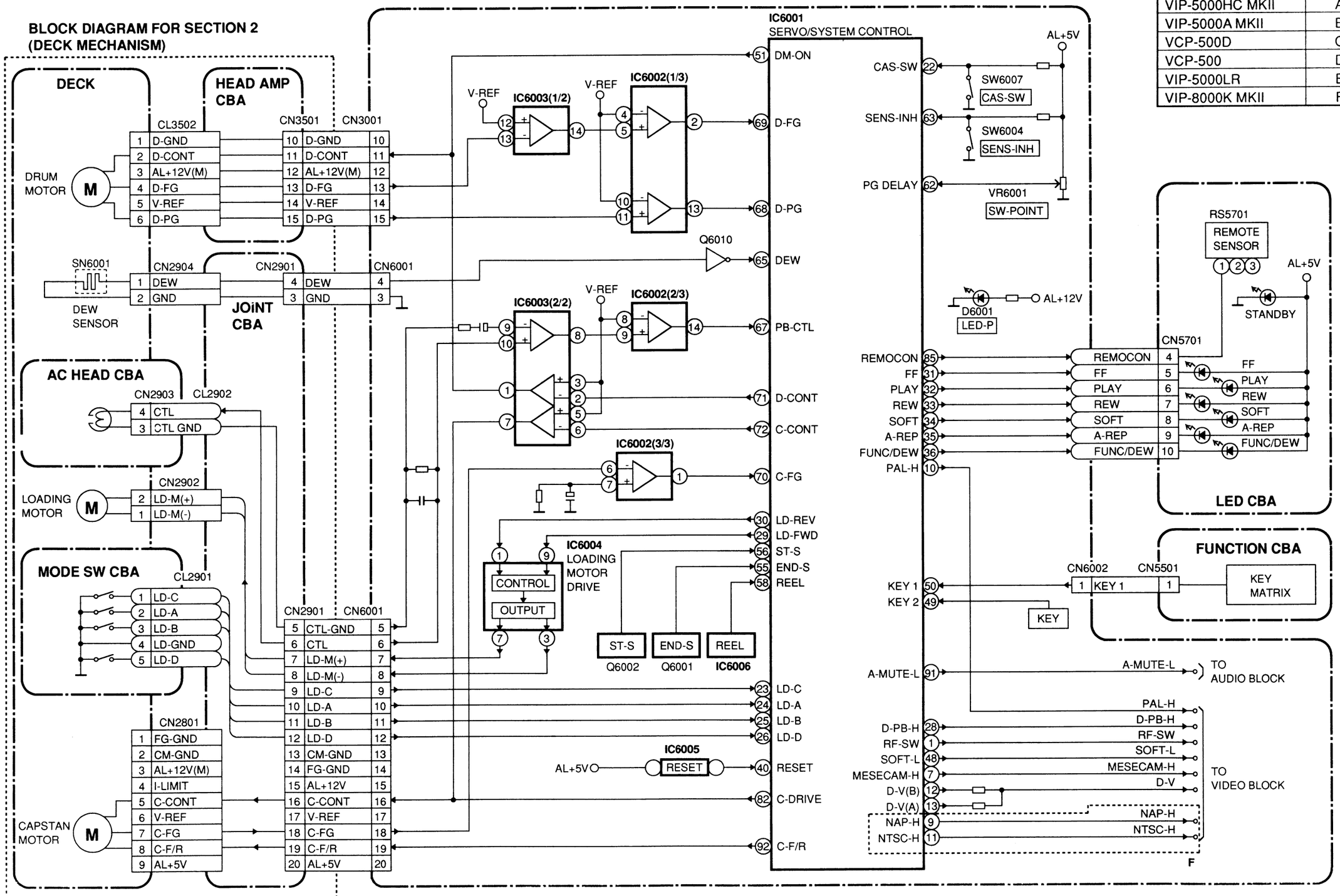

WIRING DIAGRAM (MODEL: E)

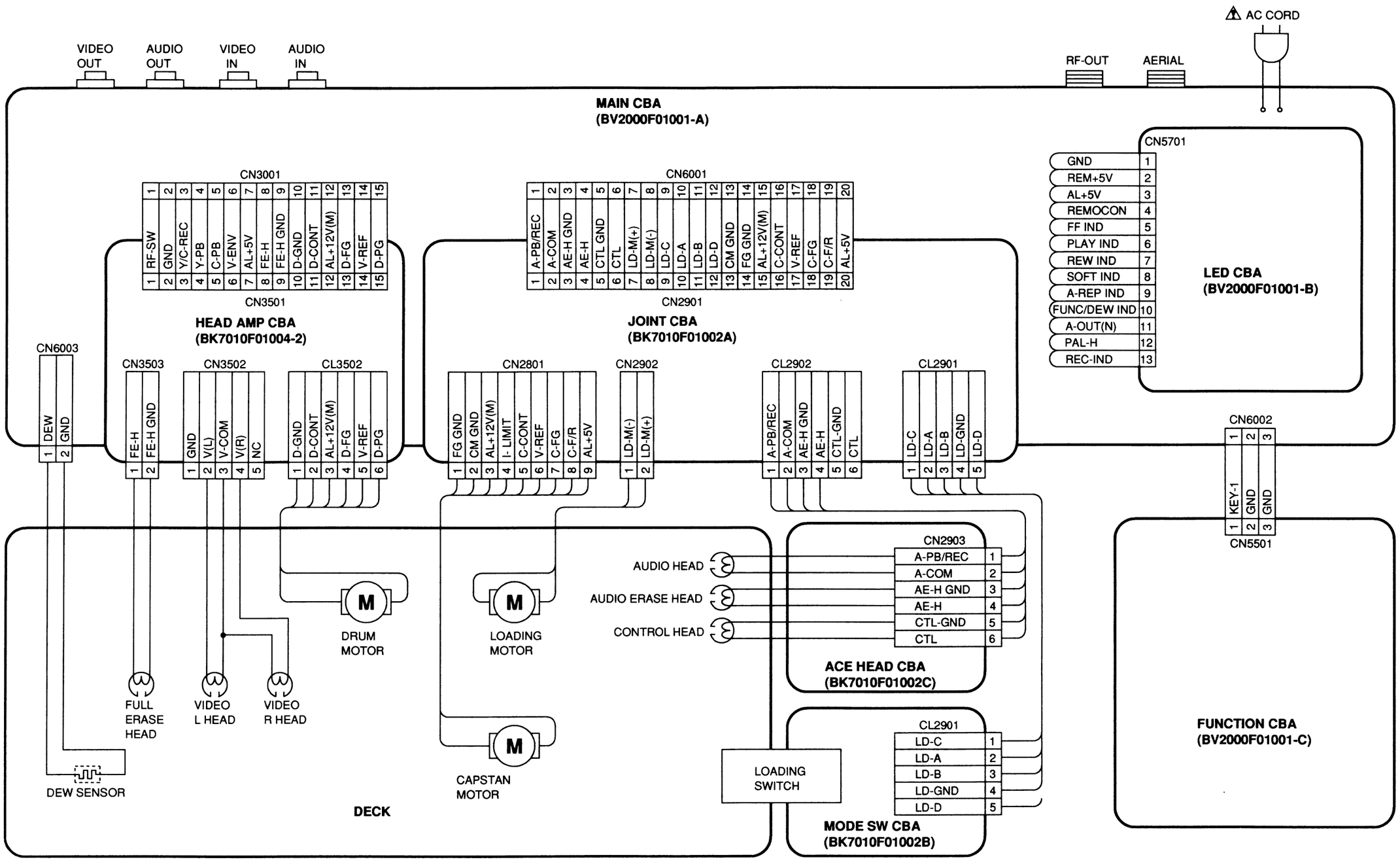

V2004WI

WIRING DIAGRAM (MODELS: A, B, C, D, F)

COMPARISON CHART OF MODELS AND TYPES

MODEL	MARK
VIP-5000HC MKII	A
VIP-5000A MKII	B
VCP-500D	C
VCP-500	D
VIP-5000LR	E
VIP-8000K MKII	F

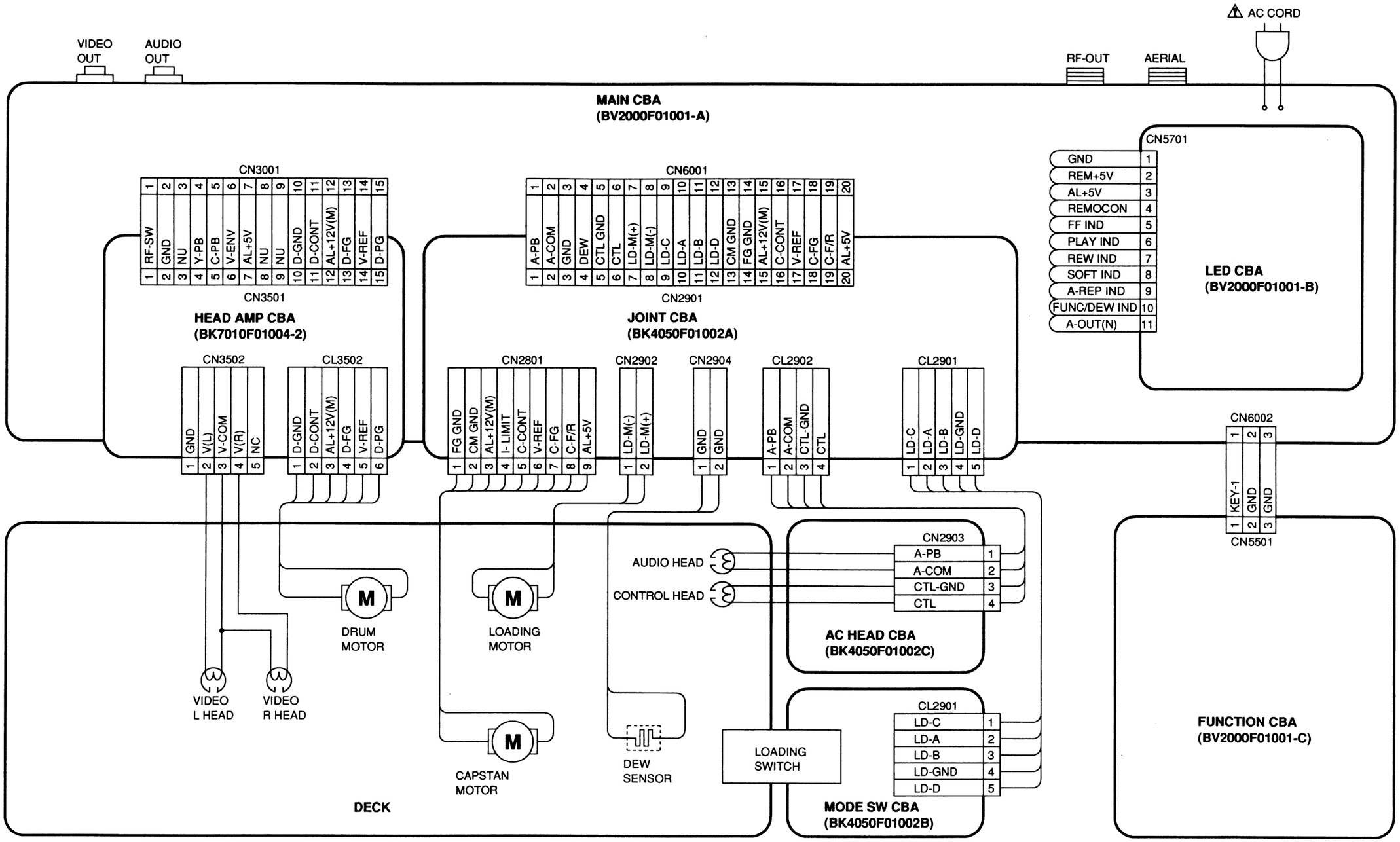

Main 5/5 Schematic Diagrams (MODEL: F)

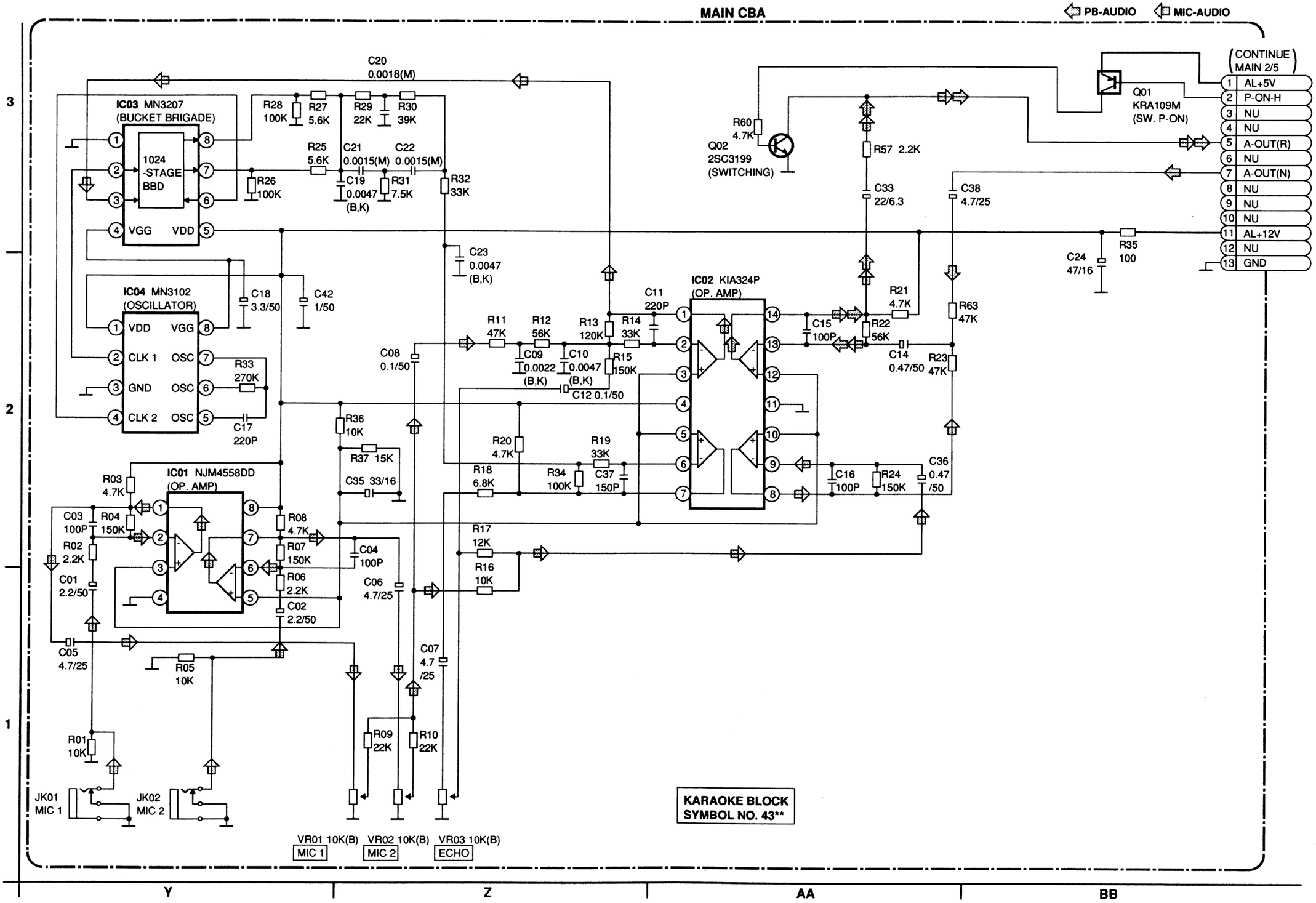

V2010SCM5

Main CBA Top View

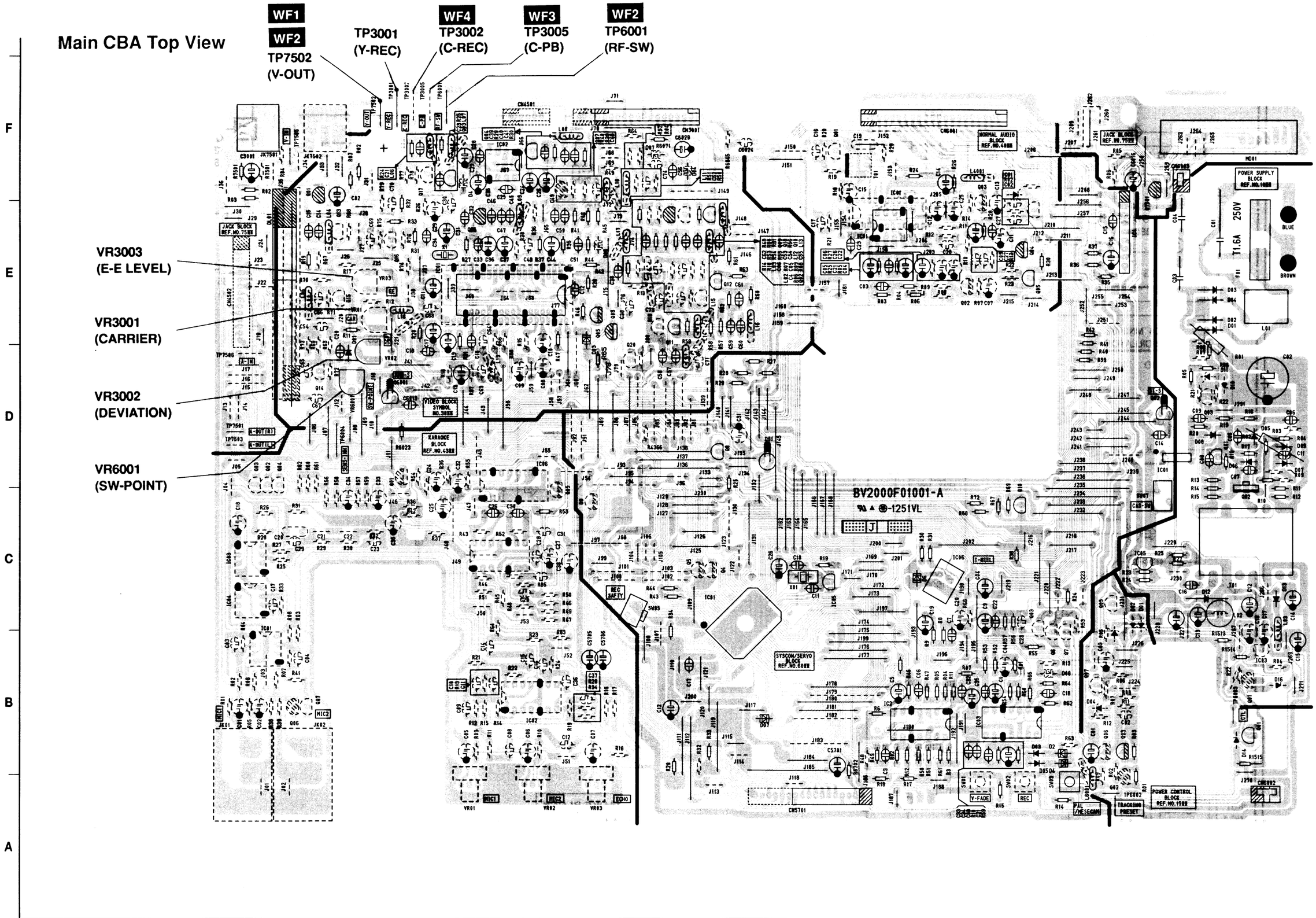

Main 4/5 Schematic Diagram (MODELS: E, F)

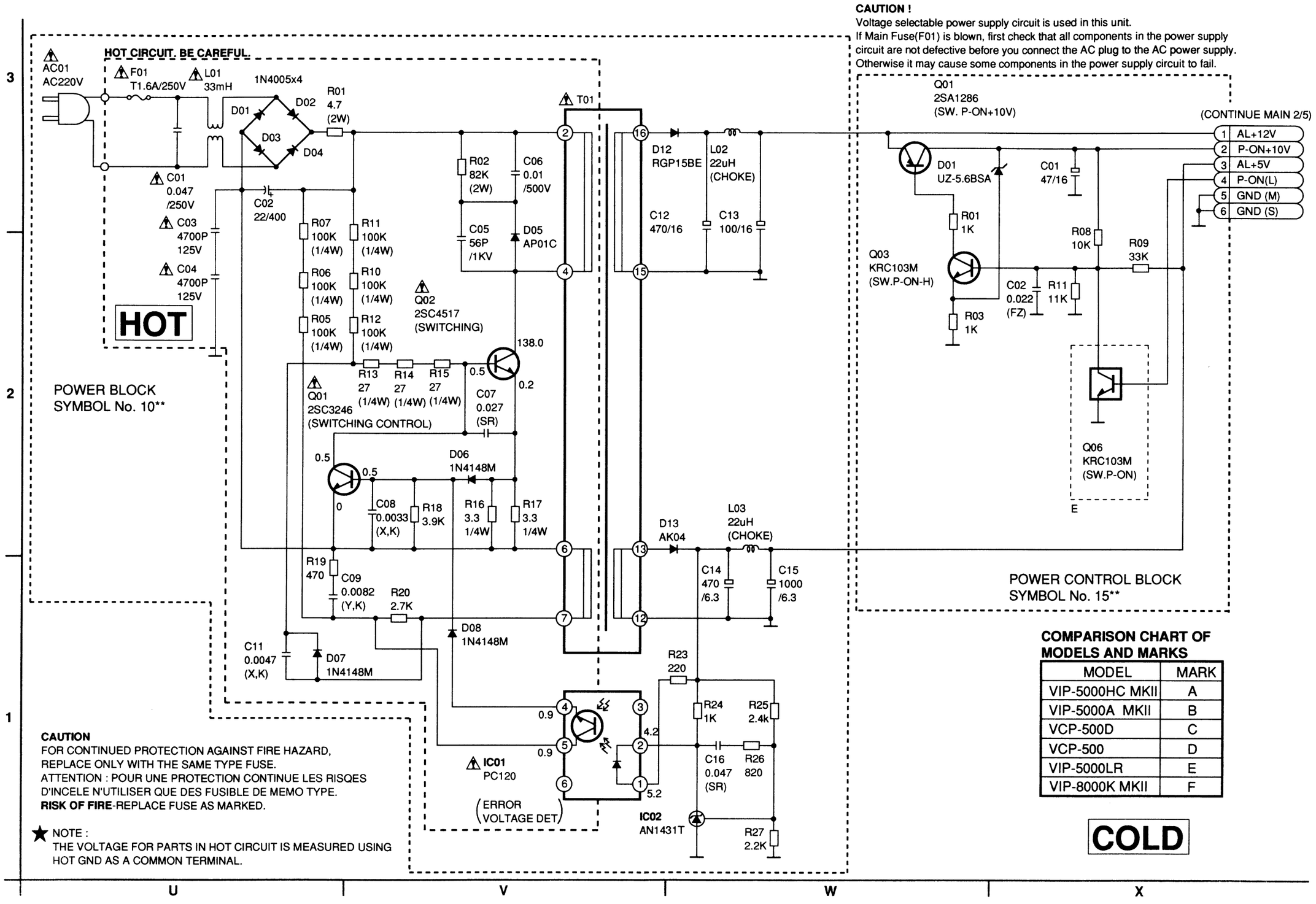

COMPARISON CHART OF MODELS AND MARKS

MODEL	MARK
VIP-5000HC MKII	A
VIP-5000A MKII	B
VCP-500D	C
VCP-500	D
VIP-5000LR	E
VIP-8000K MKII	F

V2004SCM4

Main 4/5 Schematic Diagram (MODELS: C, D)

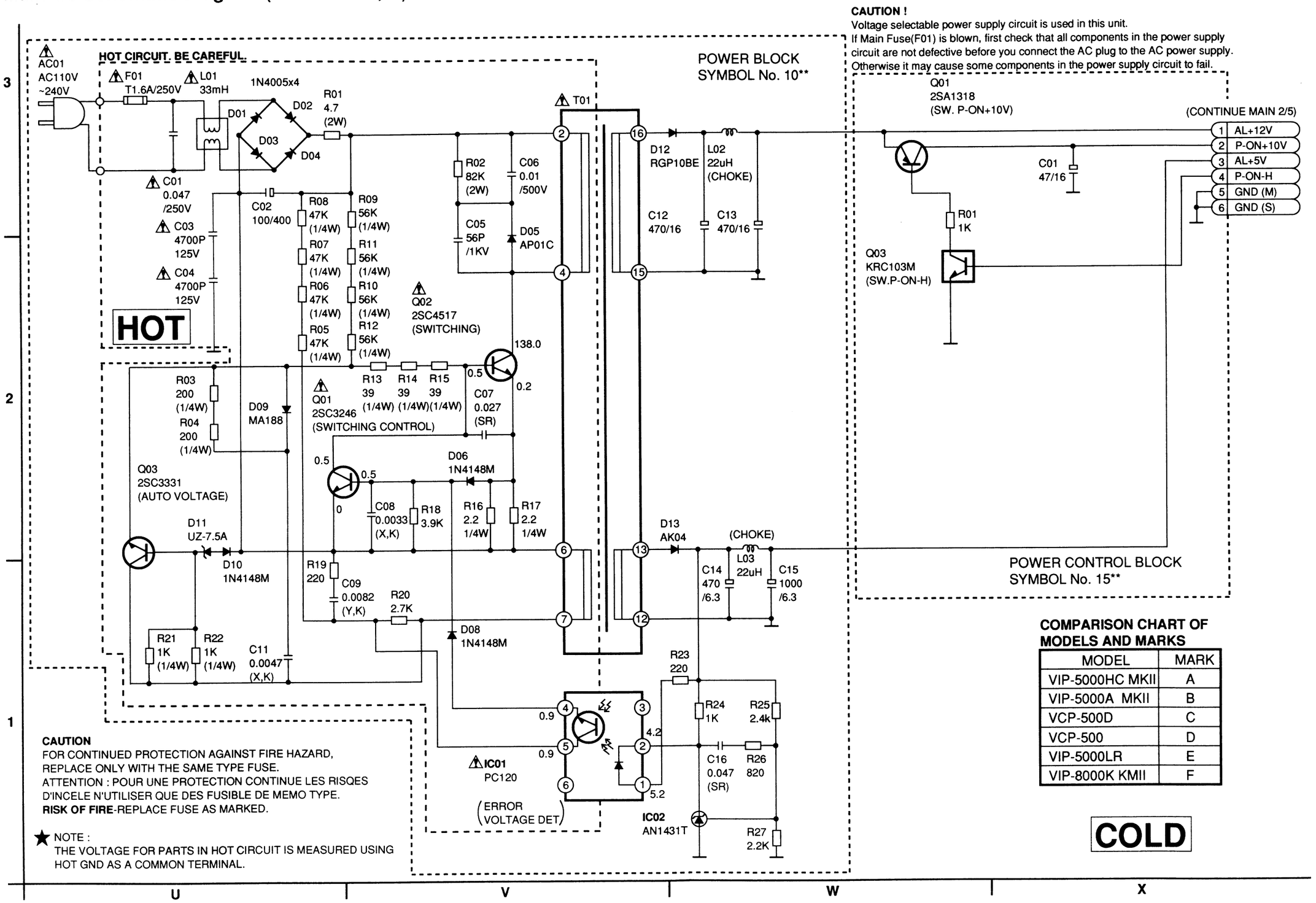

COMPARISON CHART OF MODELS AND MARKS

MODEL	MARK
VIP-5000HC MKII	A
VIP-5000A MKII	B
VCP-500D	C
VCP-500	D
VIP-5000LR	E
VIP-8000K KMII	F