SECTION 5
DIAGRAMS

5-1. BLOCK DIAGRAMS

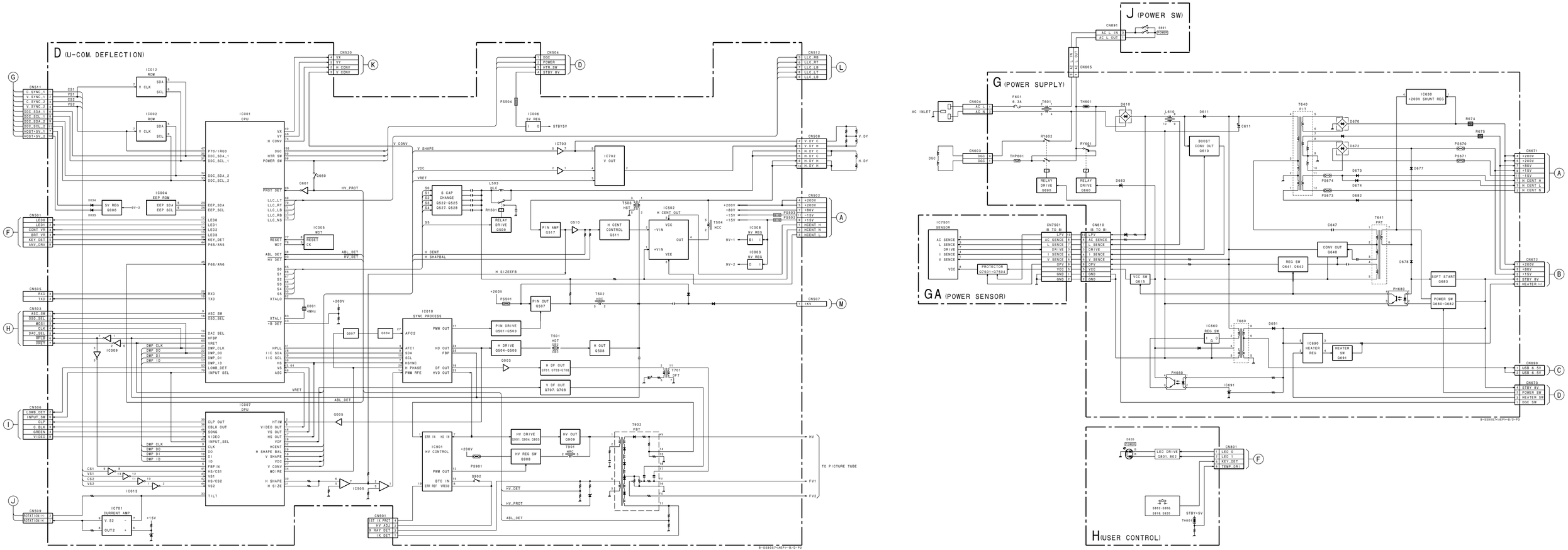

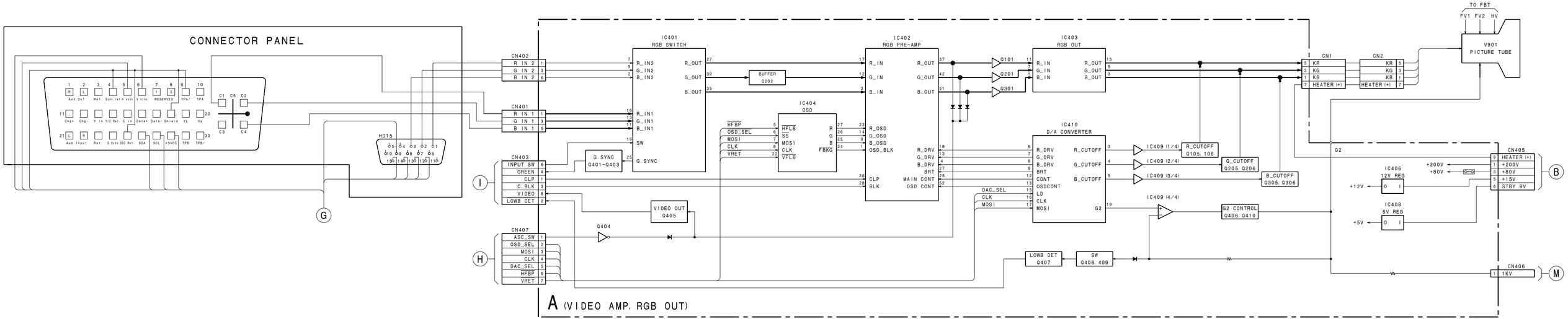
CONNECTOR PANEL
HD15
CN402
R IN 2
G IN 2
B IN 2
CN401
R IN 1
G IN 1
B IN 1
CN403
INPUT SW
GREEN
CLP
C BLK
VIDEO
LOWB DET
CN407
ASC_SW
OSD_SEL
MOSI
CLK
DAC_SEL
HFBP
VRET
IC401
RGB SWITCH
R_IN2
G_IN2
B_IN2
R_IN1
G_IN1
B_IN1
SW
G SYNC
R_OUT
G_OUT
B_OUT
BUFFER
Q202
G SYNC
Q401-Q403
VIDEO OUT
Q405
Q404
IC402
RGB PRE-AMP
R_IN
G_IN
B_IN
R_OSD
G_OSD
B_OSD
OSD_BLK
CLP
BLK
R_DRV
G_DRV
B_DRV
BRT
MAIN CONT
OSD CONT
IC404
OSD
HFLB
SS
MOSI
CLK
VFLB
R
G
B
FBKG
Q101
Q201
Q301
IC403
RGB OUT
IC410
D/A CONVERTER
CONT
OSDCONT
LD
CLK
MOSI
R_CUTOFF
G_CUTOFF
B_CUTOFF
G2
IC409 (1/4)
IC409 (2/4)
IC409 (3/4)
IC409 (4/4)
R_CUTOFF
Q105, 106
G_CUTOFF
Q205, Q206
B_CUTOFF
Q305, Q306
G2 CONTROL
Q406, Q410
LOWB DET
Q407
SW
Q408, 409
TO FBT
FV1 FV2 HV
V901
PICTURE TUBE
CN1
KR
KG
KB
HEATER (+)
CN2
CN405
HEATER (+)
+200V
+80V
+15V
STBY 8V
IC406
12V REG
+12V
IC408
5V REG
+5V
CN406
1KV
A (VIDEO AMP, RGB OUT)
B-SS9057<AEP>-B/D-P1
CN5002
H CONV
V CONV
VX
VY
GS5001
GEOMAGNETIC
SENSOR
CN5001
LLC-RB
LLC-RT
LLC-LB
LLC-LT
LLC-NS
IC5401 (1/2)
IC5401 (2/2)
IC5301 (1/2)
IC5301 (2/2)
IC5101 (1/2)
IC5101 (2/2)
IC5201
CN5004
H STAT (+)
H STAT (-)
V STAT (+)
V STAT (-)
CN5003
LLC-LT (+)
LLC-LT (-)
LLC-LB (+)
LLC-LB (-)
LLC-RT (+)
LLC-RT (-)
LLC-RB (+)
LLC-RB (-)
LLC-NS (+)
LLC-NS (-)
ROTATION (+)
ROTATION (-)
ROTATION
H STAT
V STAT
LLC-LT
LLC-LB
LLC-RT
LLC-RB
LLC-NS
L (V. STAT. H. STAT. LLC
GEO MAGNETIC SENSOR)

FRAME SCHEMATIC DIAGRAM

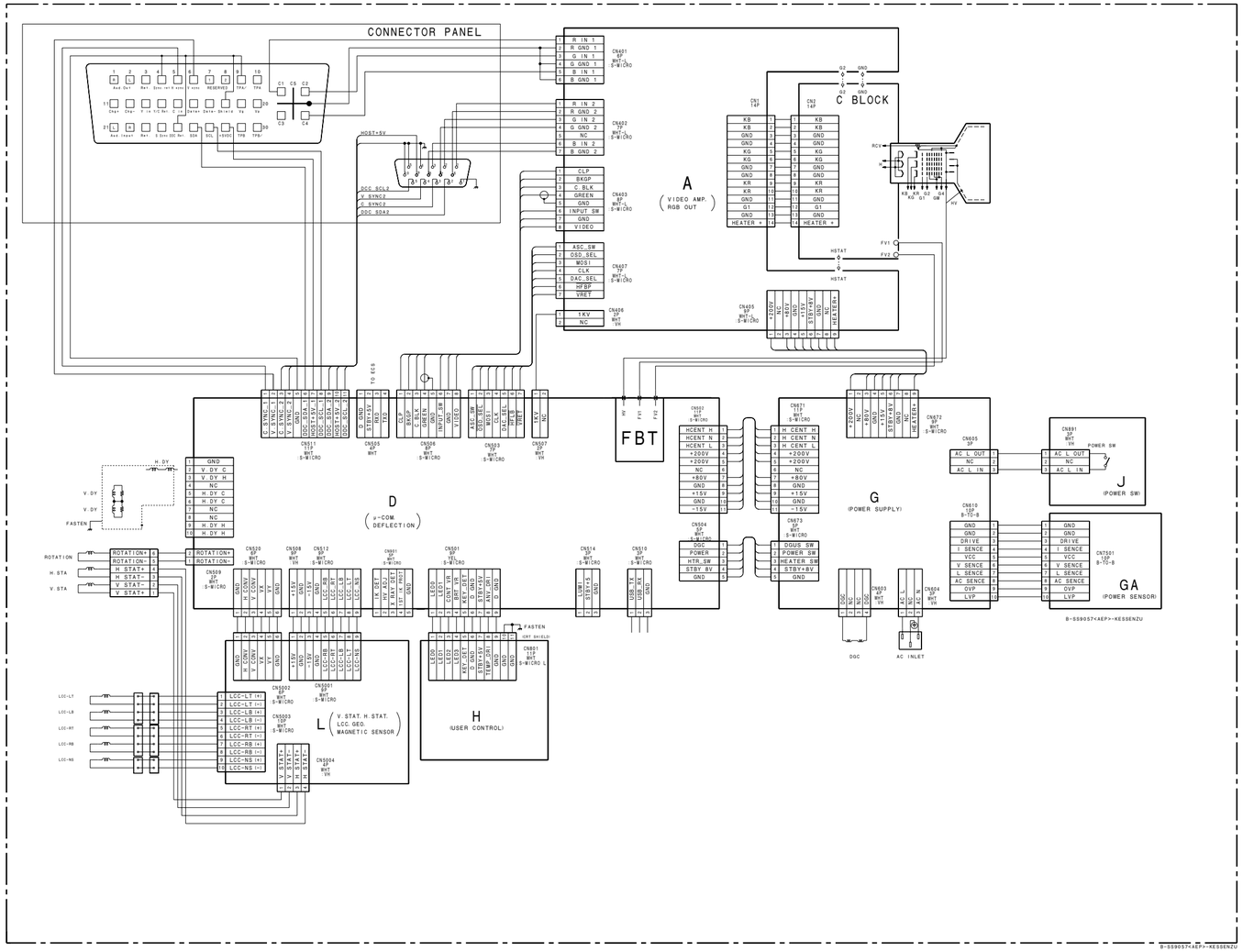

5-3. CIRCUIT BOARDS LOCATION

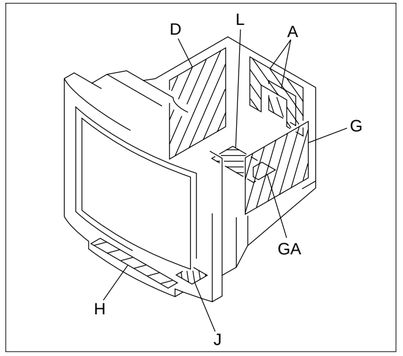

Note: The components identified by shading and mark ⚠ are critical for safety. Replace only with part number specified.

Note: Les composants identifiés per un tramé et une marque ⚠ sont critiques pour la sécurité. Ne les remplacer que par une pièce portant le numéro spécifié.

- All voltages are in V.
- Readings are taken with a 10 M digital multimeter.
- Readings are taken with a color-bar signal input.
- Voltage variations may be noted due to normal production tolerances.
- ∗ : Can not be measured.
- Circled numbers are waveform references.
- ━━━ : B + bus.
- ▬ ▬ ▬ : B – bus.

5-4. SCHEMATIC DIAGRAMS AND PRINTED WIRING BOARDS

Note:

- All capacitors are in µF unless otherwise noted. (pF: µµF) Capacitors without voltage indication are all 50 V.
- Indication of resistance, which does not have one for rating electrical power, is as follows.

Pitch: 5 mm Rating electrical power 1/4 W (CHIP : 1/10 W)

- All resistors are in ohms.
- ▭ : nonflammable resistor.
- ▭ : fusible resistor.
- △ : internal component.
- ▭ : panel designation, and adjustment for repair.
- All variable and adjustable resistors have characteristic curve B, unless otherwise noted.
- ⊥ : earth-ground.
- ⏚ : earth-chassis.
- The components identified by ⋈ in this basic schematic diagram have been carefully factory-selected for each set in order to satisfy regulations regarding X-ray radiation. Should replacement be required, replace only with the value originally used.
- When replacing components identified by ◪, make the necessary adjustments indicated. (See page 3-1)
- When replacing the part in below table, be sure to perform the related adjustment.

	Part replaced (◪)	
HV Regulator Circuit Check	D Board	IC901, T902 • Mounted D board
HV Protector Circuit Check	D Board	Q660, Q661, D916, D935, C924, R665, R667, R940, R980, T902 • Mounted D board
	G Board	PH680, Q680, Q683, D680, R680, R685, R686, R687, R688, R689 • Mounted G board
Beam Current Protector Circuit Check	D Board	IC901, D904, D907, D908, R011, R908, R909, R921, R925, R926, R929, R930, T902 • Mounted D board

Terminal name of semiconductors in silk screen printed circuit (∗)

	Device	Printed symbol	Terminal name	Circuit
①	Transistor	T	Collector Base T Emitter	
②	Transistor	▬	Collector Base ▬ Emitter	
③	Diode	▭	Cathode ▭ Anode	
④	Diode	T	Cathode Anode T (NC)	
⑤	Diode	▬	Cathode Anode ▬ (NC)	
⑥	Diode	T	Common Anode T Cathode	
⑦	Diode	▬	Common Anode ▬ Cathode	
⑧	Diode	T	Common Anode T Anode	
⑨	Diode	▬	Common Anode ▬ Anode	
⑩	Diode	T	Common Cathode T Cathode	
⑪	Diode	▬	Common Cathode ▬ Cathode	
⑫	Diode	▌	Anode ▌ Cathode Anode ▌ Anode Cathode ▌ Anode	
⑬	Transistor (FET)	▌	Drain ▌ Source Gate	
⑭	Transistor (FET)	▌	Drain ▬ Source Gate	
⑮	Transistor (FET)	▌	☐ Source ☐ Drain ☐ Gate	
⑯	Transistor	▌	☐ Emitter ☐ Collector ☐ Base	
–	Discrete semiconductot			

(Chip semiconductors that are not actually used are included.)

Ver.1.5

— D BOARD (Conductor Side) —

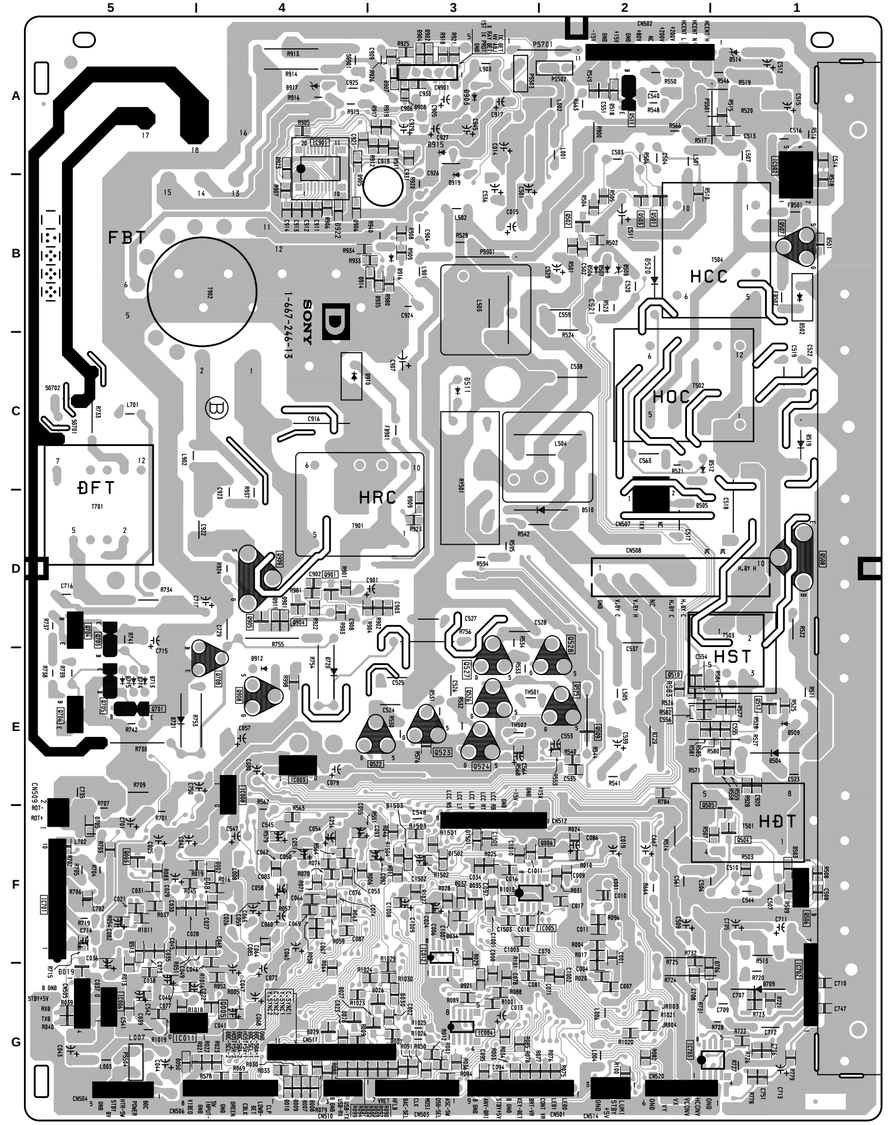

• D BOARD SEMICONDUCTOR LOCATION

IC	(Conductor Side)	(Component Side)
IC001		F–3
IC002		F–3
IC003	E–2	E–4
IC004	G–3	
IC005	F–3	
IC006	G–1	G–5
IC007		F–4
IC008	E–2	E–4
IC009		F–3
IC010		F–5
IC011	G–1	G–5
IC012	F–3	
IC013		G–3
IC502	A–5	A–1
IC505		E–4
IC701	F–1	F–5
IC702	G–5	G–1
IC703	G–4	
IC901	A–2	

TRANSISTOR	(Conductor Side)	(Component Side)	*
Q001		F–5	②
Q003	F–1		①
Q004		F–4	②
Q005	G–2		①
Q006	F–4		①
Q007		F–4	②
Q501	B–4		①
Q502	B–4		①
Q503	B–4		①
Q504	F–5		①
Q505	F–5		①
Q506	F–5	F–5	–
Q507	B–5	B–1	–
Q508	D–5	D–1	–
Q509	E–4		①
Q510	E–4		①
Q511	A–4	A–2	–
Q512		E–3	②
Q513		E–3	②
Q517	E–5		①
Q522	E–3	E–3	–
Q523	E–3	E–3	–
Q524	E–3	E–3	–
Q525	E–4	E–2	–
Q526	E–3	E–3	–
Q527	E–3	E–3	–
Q528	E–4	E–2	–
Q660		E–2	②
Q661		F–2	②
Q701	E–1	E–5	–
Q703	D–1	D–5	–
Q704	D–1	D–5	–
Q705	E–1	E–5	–
Q706	E–1	E–5	–
Q707		E–4	②
Q708	E–2	E–5	–
Q901	D–2		①
Q902		A–3	②
Q904	D–2		①
Q905	D–2		①
Q908	E–2	E–4	–
Q909	D–2	D–4	–

DIODE	(Conductor Side)	(Component Side)	*
D004		G–3	⑦
D007	G–2		③
D008	G–2		③
D009	G–2		③
D010	G–2		③
D012		G–2	⑦
D013		G–2	⑦
D014		G–2	⑦
D015		G–2	⑦
D016		G–3	⑦
D019	F–1		⑥
D020		G–5	⑦
D025		F–5	③
D026	G–3		⑥
D027	G–3		⑥
D028	G–2		⑥
D029	G–2		⑥
D032	F–3		③
D033		F–3	③
D034	F–3		⑥
D035	F–3		⑥
D050	G–1		③
D501	B–5		③
D502	B–5	B–1	–
D503	F–5		③
D504	E–5	E–1	–
D505	D–4	D–1	–
D506	B–4	B–2	–
D507	B–4	B–2	–
D508	B–4	B–2	–
D509	E–5	E–1	–
D510	D–4	D–2	–
D511	C–3	C–3	–
D512	C–4	C–2	–
D513	F–1		③
D514	A–5	A–1	–
D515		E–3	③
D516		E–3	③
D517		E–3	③
D518	A–4		③
D519	C–5	C–1	–
D520	B–4	B–2	–
D521		B–2	③
D660		E–2	③
D701		F–5	③
D704		F–5	③
D705	F–1		③
D706	G–5		③
D709	G–5	G–1	–
D713	E–1	E–5	–
D714	E–1	E–5	–
D715	E–1	E–5	–
D718		E–5	③
D720	E–2	E–4	–
D721	E–1	E–5	–
D901	D–2		③
D902	A–3		③
D903	A–3	A–3	–
D904	A–3		③
D905	A–2		③
D906	B–2		③
D907	A–3		③
D908	A–3		③
D909	D–3		③
D910	C–2	C–4	–
D911	D–2		③
D913		A–3	③
D915	A–3	A–3	–
D916	B–3	B–3	–
D917	A–2	A–4	–
D919	A–3	A–3	–
D921	G–3		③
D922	B–2		③
D923	A–2		③
D924		F–2	③
D935	B–3		③
D1501	F–3		③
D1502	F–3		③
D1503	F–3		③

CRYSTAL	(Conductor Side)	(Component Side)
X001	F–4	F–2

*: Refer to Terminal name of semiconductors in silk screen printed circuit (see page 5-9)

NOTE:
The circuit indicated as left contains high voltage of over 600 Vp-p. Care must be paid to prevent an electric shock in inspection or repairing.

— D BOARD (Component Side) —

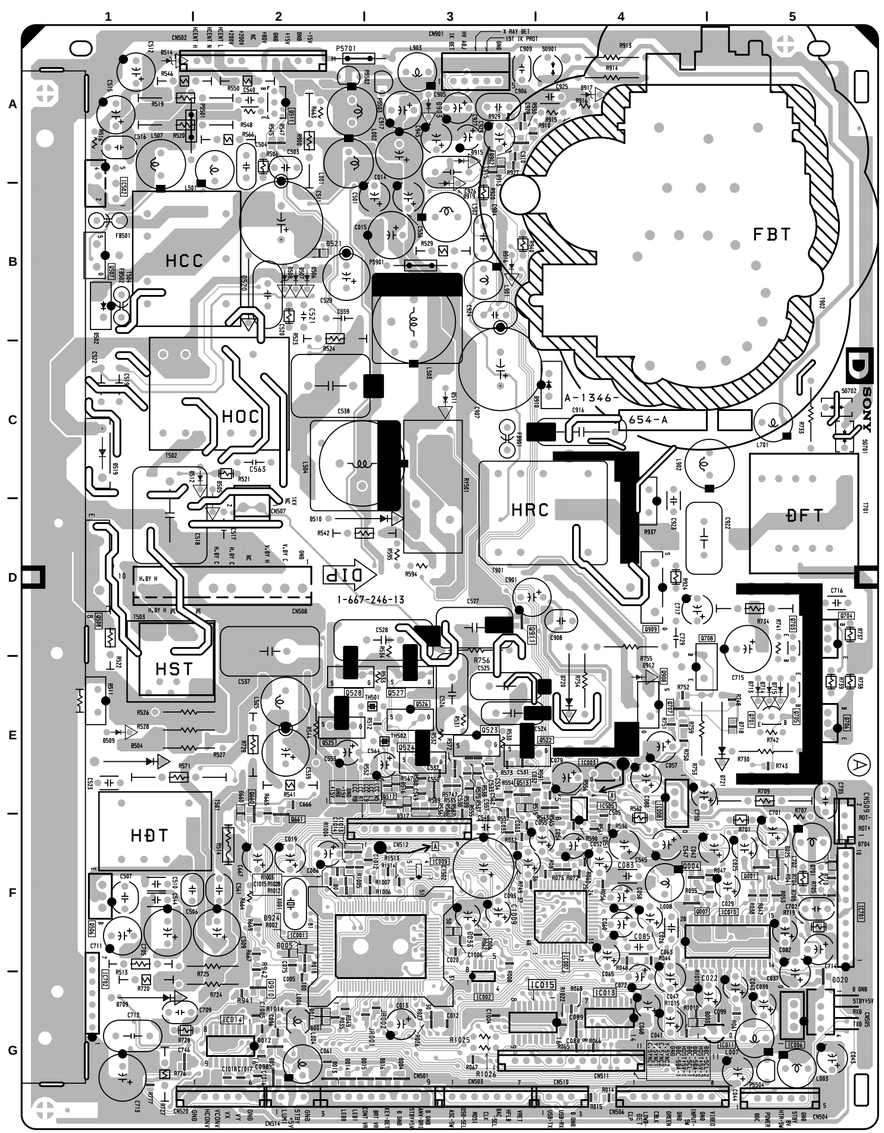

(1) Schematic Diagram of D Board

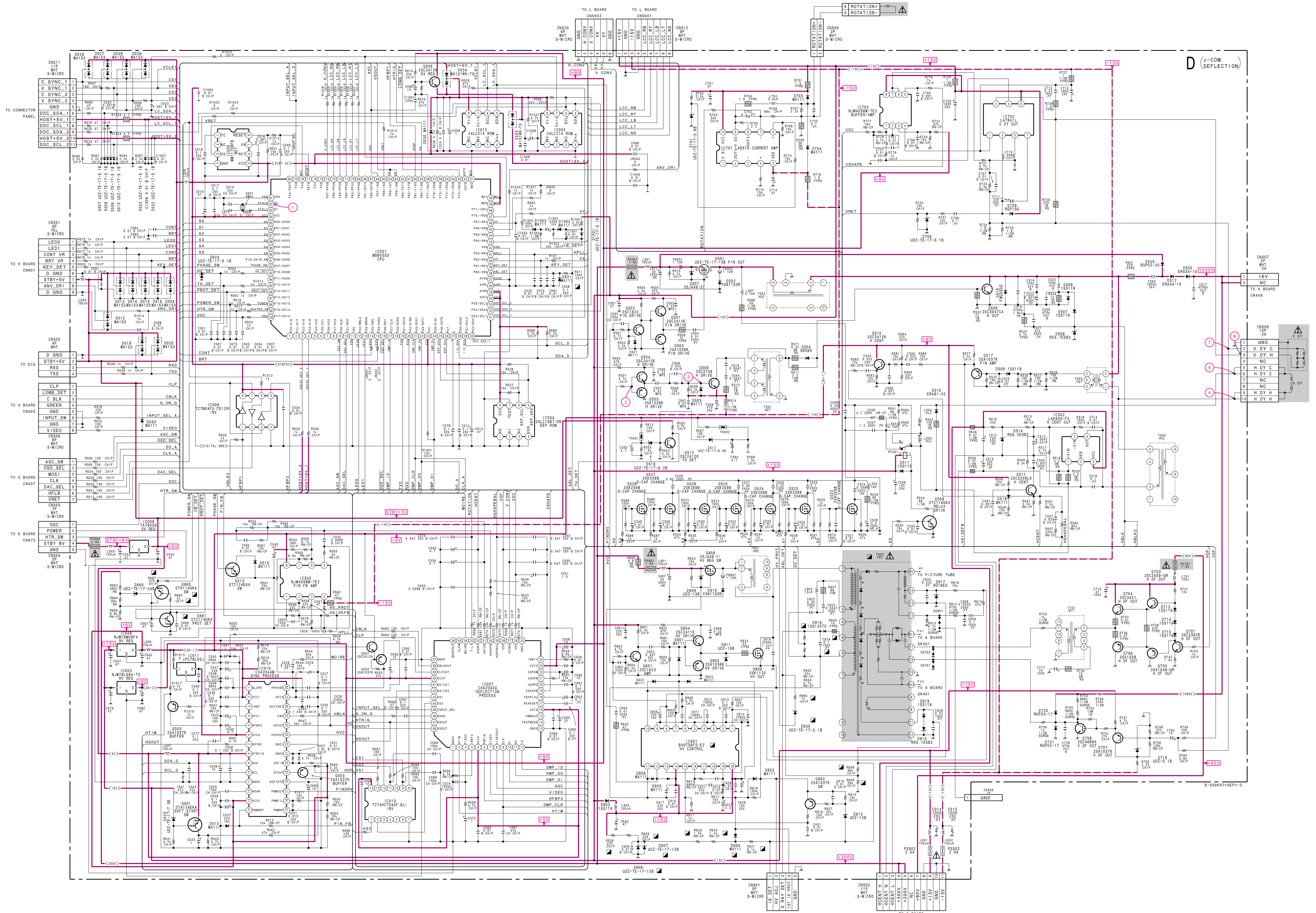

• D BOARD WAVEFORMS

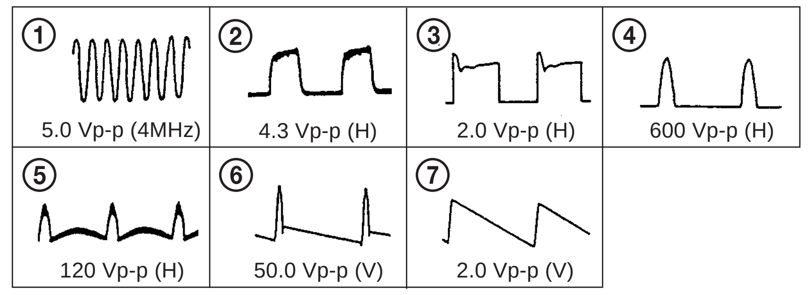

• D BOARD IC701 LA6510

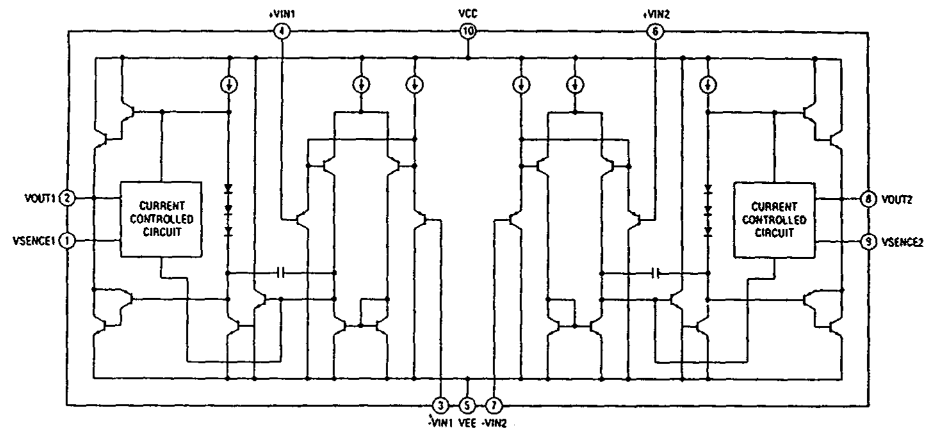

• D BOARD VOLTAGE LIST

Ref.	Pin No.	Voltage [V]
IC002	5	1.1
	6	4.2
	7	0
IC004	5	4.8
	6	4.8
IC005	1	0.4
	3	0
	7	1.5
	8	4.8
IC009	1	–0.1
	2	4.7
	3	4.5
	5	0.3
	6	0.3
	7	4.5
IC010	1	4.0
	3	3.0
	4	2.8
	5	2.3
	6	2.6
	7	0.6
	9	4.8
	10	4.8
	12	5.4
	14	4.5
	15	4.5
	16	5.4
	17	1.0
	18	0
	19	5.1
	20	3.7
	23	0.8
	24	2.5
	25	–0.1
	26	4.0
	27	4.0
	28	4.4
IC012	5	0.6
	6	3.9
	7	4.1
IC013	1	0
	2	4.9
	8	0.6
	9	3.6
	10	4.9
	11	0
	13	5.7
IC014	1	3.5
	3	3.5
	5	2.7
	9	0
	10	0.1
	12	4.9
	13	4.9
	14	3.2
	15	3.9
IC015	1	0.5
	2	4.2
	3	0.5
	4	0.5
	5	0
	6	0
	8	0
	9	0
	13	0
IC502	1	41.4
	2	41.4
	3	33.7
	4	42.3
	5	48.3
IC505	1	4.5
	2	0
	3	0
	5	0
	6	0
	7	–10.0
IC701	1	14.2
	2	14.2
	3	0
	4	3.6
	6	3.0
	7	3.0
	8	–0.7
	9	–0.7
IC702	2	0.4
	3	13.5
	4	1.2
	5	1.2
	7	–13.0
IC703	1	1.2
	2	1.6
	3	1.6
	5	2.8
	6	2.8
	7	2.8
IC901	1	9.3
	2	5.6
	4	5.0
	6	1.1
	7	0.9
	8	9.3
	10	0

Ref.	Pin No.	Voltage [V]
	11	0
	12	11.2
	15	0
	16	8.4
	19	9.2
Q003	B	5.1
	C	0
	E	5.7
Q005	B	2.5
	C	0
	E	3.1
Q501	B	11.2
	C	13.8
	E	10.8
Q502	B	0.2
	C	11.2
Q503	B	11.2
	E	10.9
Q504	B	2.5
	C	12.0
	E	2.5
Q505	B	2.5
	E	2.4
Q506	B	–14.0
	C	–0.2
	E	–14.0
Q507	G	197.4
	D	41.8
Q508	B	–1.4
	C	41.0
Q509	B	0
	C	14.1
Q510	B	4.5
	E	3.9
Q511	B	3.2
	C	33.5
	E	2.6
Q517	B	4.6
	E	5.1
Q522	G	0
	D	15.2
Q523	G	4.7
	D	0
Q524	G	4.7
	D	0
Q525	G	4.7
	D	0
Q527	G	4.7
	D	0
Q528	G	4.7
	D	0
Q660	B	4.2
	C	0
	E	4.2
Q661	B	0
	C	4.2
Q701	B	5.7
	C	36.0
	E	5.1
Q703	B	37.9
	E	37.4
Q704	B	37.4
	E	37.0
Q705	B	36.0
	E	36.6
Q706	B	36.6
	E	37.0
Q707	B	–0.6
	C	–5.0
	E	0
Q708	B	0.6
	C	477.0
Q901	B	0.1
	C	9.9
Q902	B	9.0
	C	0
	E	9.0
Q904	B	8.6
	C	13.0
	E	8.4
Q905	B	8.6
	E	8.4
Q908	G	196.6
	D	40.1
Q909	G	8.4
	D	40.4

(2) Schematic Diagrams of G, GA, H, J and L Boards

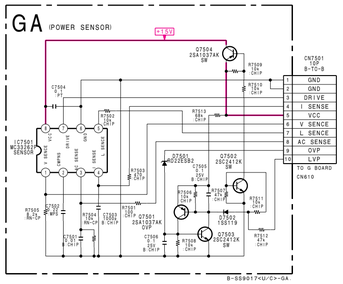

• GA BOARD
VOLTAGE LIST

Ref.	Pin No.	Voltage [V]
IC7501	1	2.6
	2	2.5
	3	1.7
	4	0.2
	5	0
	7	8.6
Q7501	B	14.0
	C	0
	E	14.0
Q7502	B	0.7
	C	0.1
Q7503	B	0
	C	14.0
Q7504	B	13.4

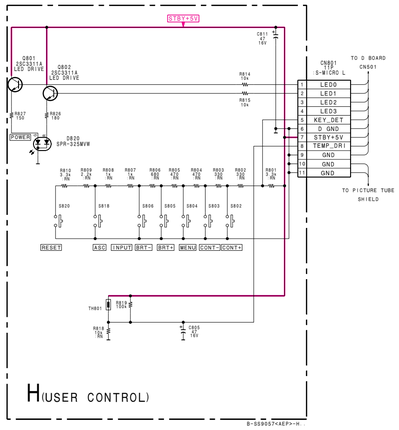

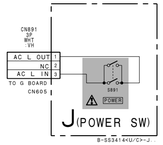

• L BOARD IC5101, 5301, 5401 LA6510

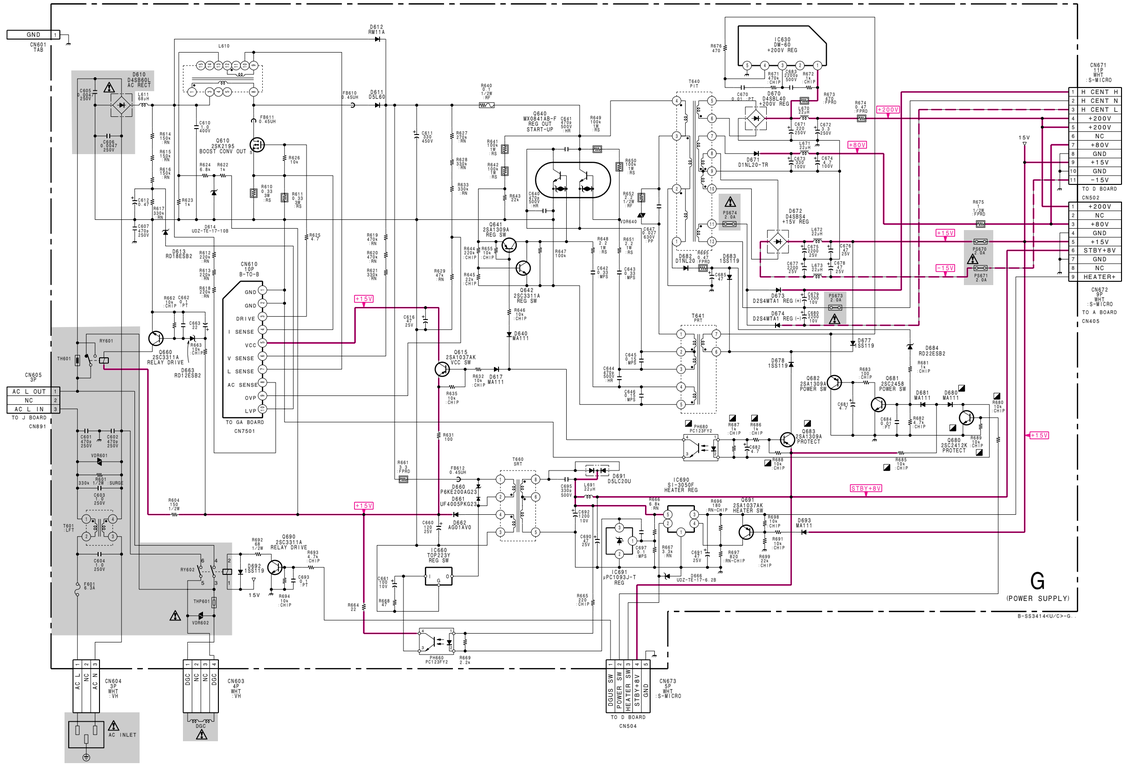

• G BOARD
VOLTAGE LIST

Ref.	Pin No.	Voltage [V]
IC630	3	2.5
	4	11.6
IC660	IN	6.1
	OUT	410.0
IC690	2	5.0
	3	6.7
	4	5.3
PH660	1	4.5
	2	3.3
	3	6.1
	4	16.7
PH680	1	1.3
	2	0.1
	3	0
	4	0.1
Q610	G	8.7
	D	102.4
	S	0.2
Q615	B	13.6
	C	14.2
	E	14.3
Q640	B1	–2.0
	C1	199.2
	B2	196.8
	C2	408.0
	E2	199.2
Q641	B	1.1
	C	–2.0
	E	2.0
Q642	B	–1.8
	C	–2.0
Q660	B	0.9
	C	0.3
Q680	B	0.8
	C	0
Q681	B	0.3
	C	11.7
Q682	B	11.7
	E	11.7
Q683	B	7.5
	C	8.3
Q690	B	0
	C	15.0
Q691	B	8.6
	C	5.3
	E	6.7

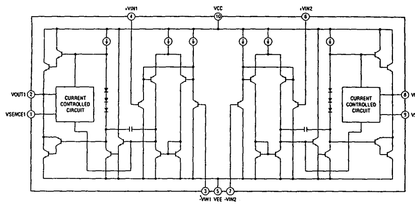

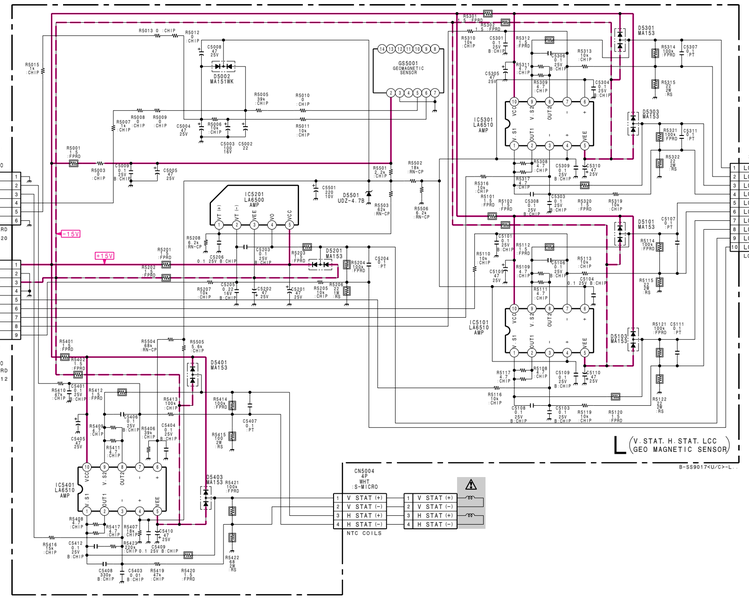

• L BOARD
VOLTAGE LIST

Ref.	Pin No.	Voltage [V]
GS5001	5	2.8
	6	2.8
IC5101	1	1.0
	2	1.0
	3	1.2
	4	1.2
	6	1.2
	7	1.2
	8	–0.2
	9	–0.2
IC5201	1	1.2
	2	1.2
	4	1.1
IC5301	1	–0.2
	2	–0.2
	3	1.2
	4	1.2
	6	1.2
	7	1.2
	8	0.4
	9	0.4
IC5401	1	0.6
	2	0.6
	3	3.4
	4	3.4
	6	1.8
	7	1.8
	8	0.4
	9	0.4

Schematic diagram
← D board

Schematic diagrams
G GA H
J L boards →

G [POWER SUPPLY]

GA [POWER SENSOR] H [USER CONTROL]

L [V.STAT, H.STAT, LLC, GEO MAGNETIC SENSOR]

— G BOARD —

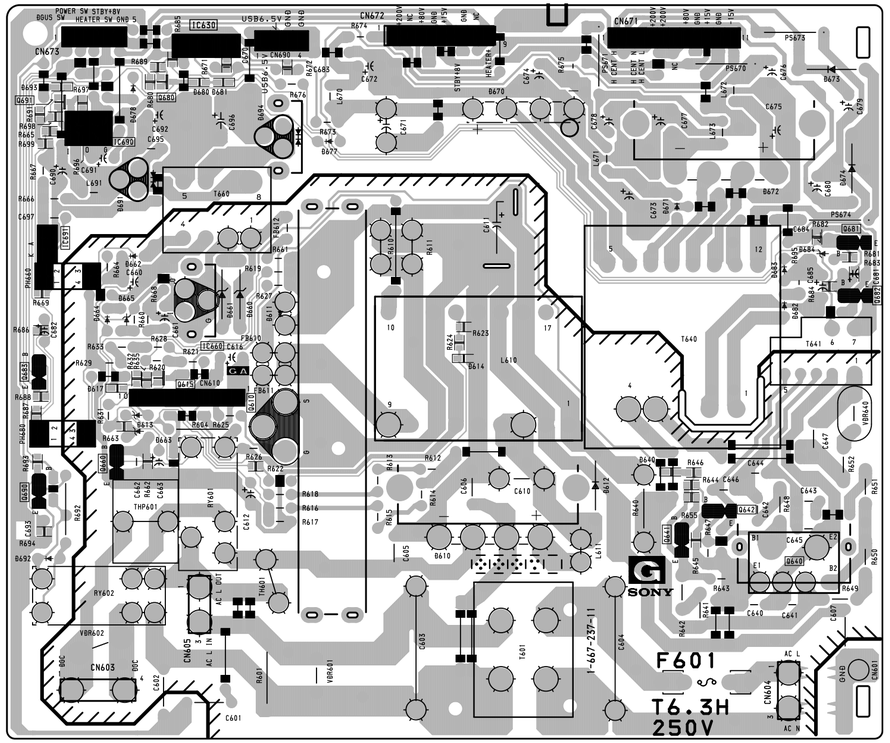

— H BOARD —

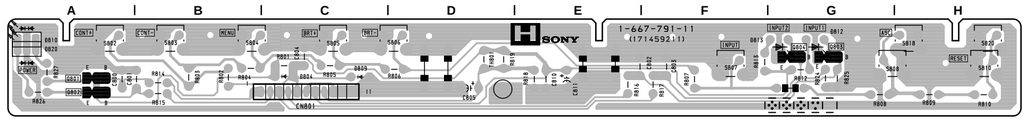

— GA BOARD —

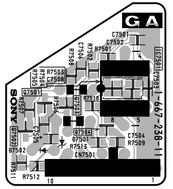

— L BOARD (Conductor Side) —

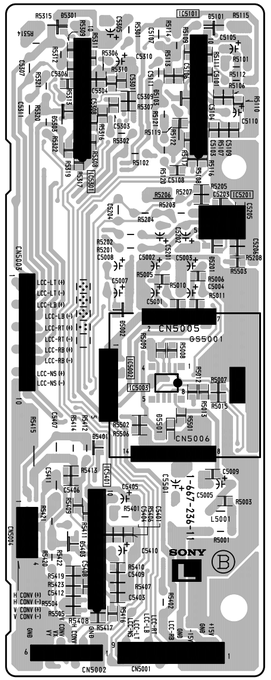

— L BOARD (Component Side) —

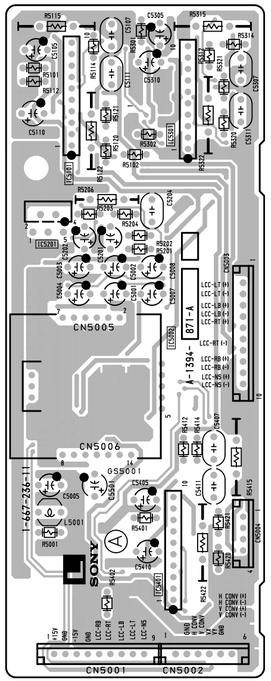

GA BOARD
Terminal name of semiconductors in silk screen printed circuit (∗)

Ref.	∗
Q7501–Q7504	①

∗: Refer to Terminal name of semiconductors in silk screen printed circuit (see page 5-9)

G BOARD
Terminal name of semiconductors in silk screen printed circuit (∗)

Ref.	∗
Q615, Q680, Q691	①
D614, D617, D640, D680, D681, D693	⑥

∗: Refer to Terminal name of semiconductors in silk screen printed circuit (see page 5-9)

L BOARD
Terminal name of semiconductors in silk screen printed circuit (∗)

Ref.	∗
D5501	③
D5101, D5103, D5201, D5301, D5303, D5401, D5403	⑥
D5002	⑧

∗: Refer to Terminal name of semiconductors in silk screen printed circuit (see page 5-9)

Schematic diagram
A board ➡

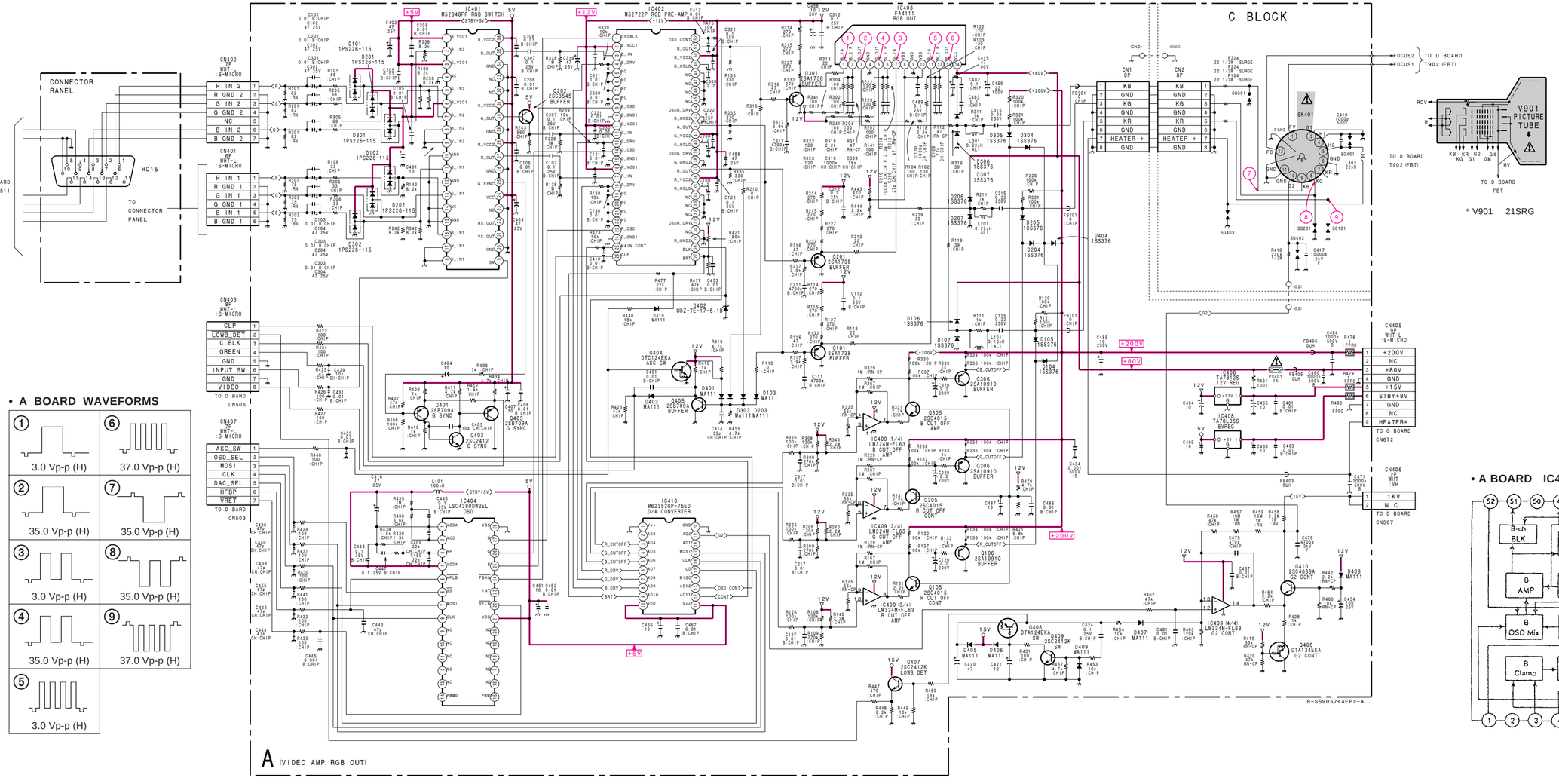

• A BOARD WAVEFORMS

① 3.0 Vp-p (H)	⑥ 37.0 Vp-p (H)
② 35.0 Vp-p (H)	⑦ 35.0 Vp-p (H)
③ 3.0 Vp-p (H)	⑧ 35.0 Vp-p (H)
④ 35.0 Vp-p (H)	⑨ 37.0 Vp-p (H)
⑤ 3.0 Vp-p (H)	

• A BOARD VOLTAGE LIST

Ref.	Pin No.	Voltage [V]
IC402	1	1.1
	3	2.8
	4	3.7
	9	1.1
	12	2.8
	13	3.8
	14	1.1
	17	2.8
	18	3.9
	23	1.1
	25	3.3
	26	0.7
	27	2.4
	28	1.2
	35	4.4
	37	2.7
	40	4.4
	42	2.7
	49	4.4
	51	2.7
	52	2.1
IC403	1	3.4
	2	2.8
	3	53.6
	5	52.7
	6	2.9
	7	3.4
	8	9.8
	10	9.8
	11	3.5
	12	2.9
	13	52.3
Q101	B	2.8
	E	3.5
Q105	B	7.3
	C	112.6

Ref.	Pin No.	Voltage [V]
	E	6.8
Q106	B	112.6
	E	113.3
Q201	B	2.7
	E	3.5
Q205	B	7.4
	C	109.9
	E	6.8
Q206	B	109.9
	E	110.4
Q301	B	2.7
	E	3.4
Q305	B	7.4
	C	113.1
	E	6.8
Q306	B	113.1
	E	113.7
Q401	B	3.6
	C	0.7
	E	4.3
Q406	B	7.9
	E	9.0
Q410	B	9.7
	C	484.0
	E	9.1
SK401	KR	87.0
	KG	87.0
	KB	87.0
	G2	474.0
	H2	6.5

• A BOARD IC402 M52722P

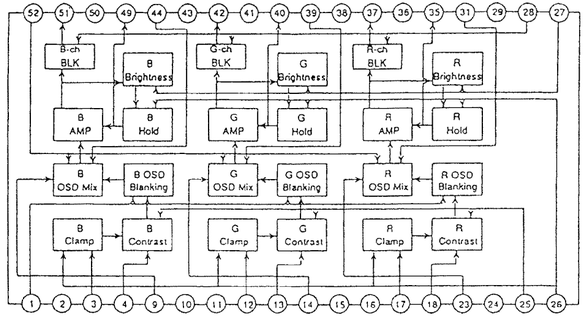

A [VIDEO AMP / RGB OUT]

— A BOARD (Conductor Side) —

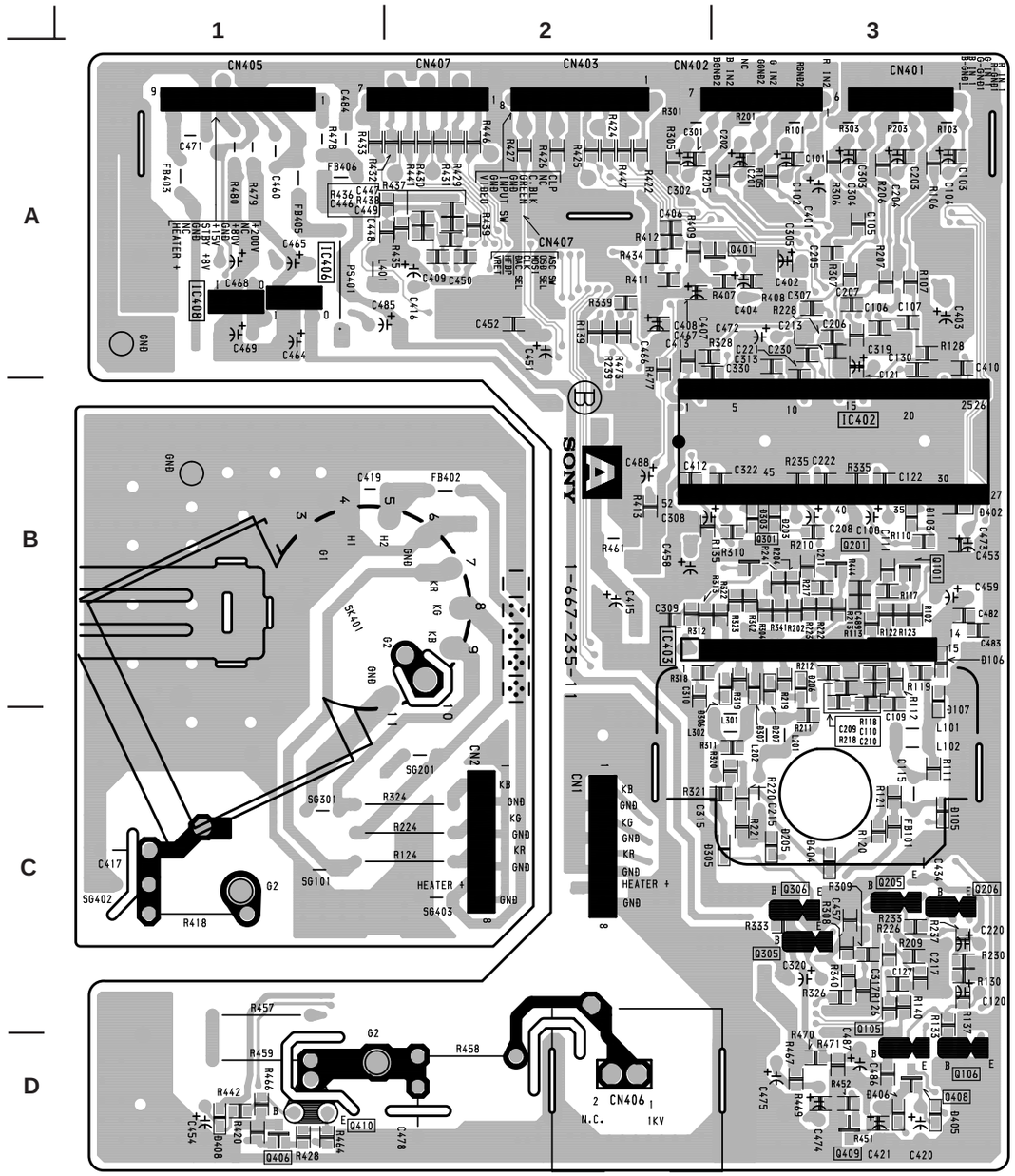

— A BOARD (Component Side) —

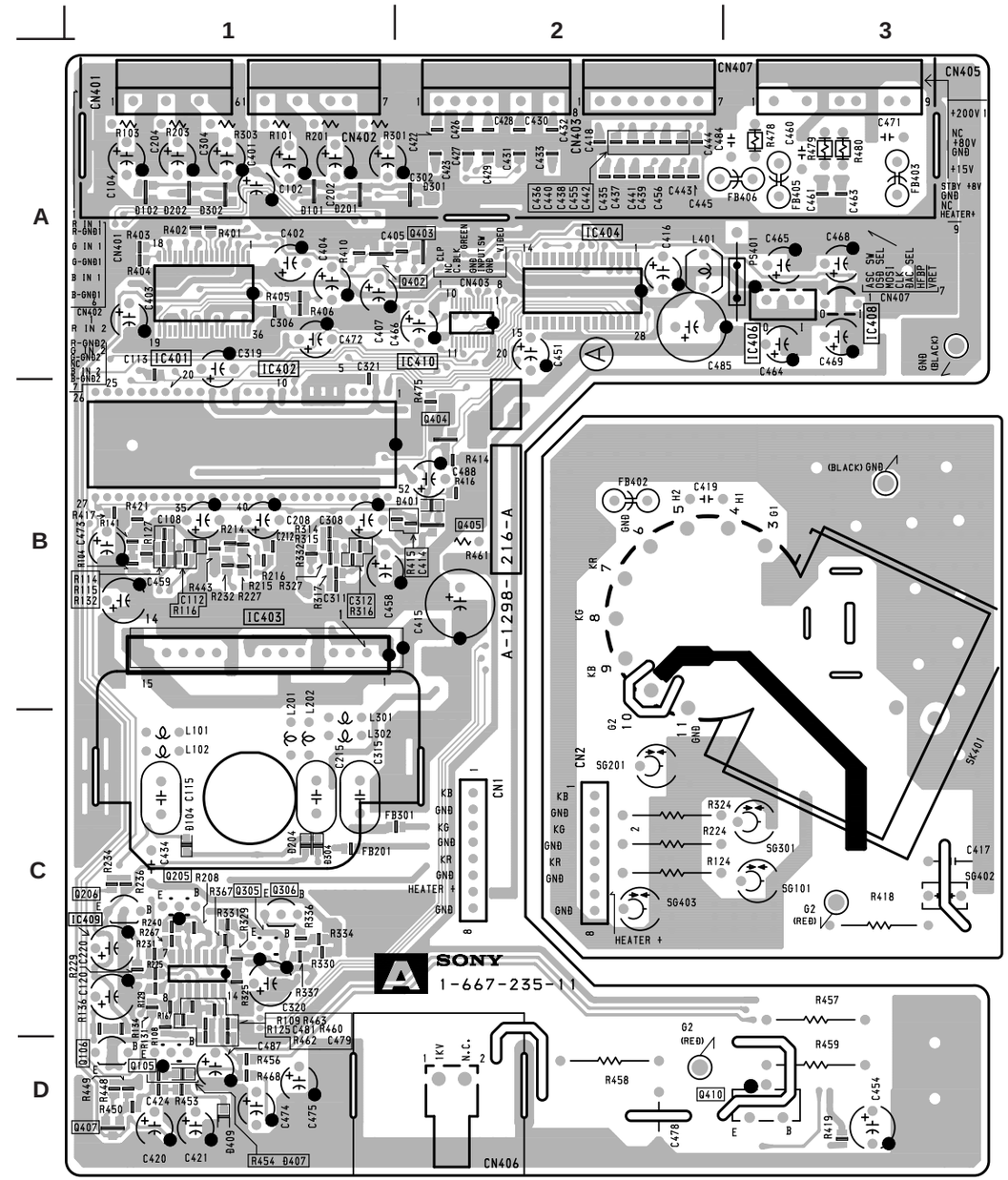

- **A BOARD SEMICONDUCTOR LOCATION**

IC

	(Conductor Side)	(Component Side)
IC401		A–1
IC402	B–3	B–1
IC403	B–3	B–1
IC404		A–2
IC406	A–1	A–3
IC408	A–1	A–3
IC409		C–1
IC410		A–2

TRANSISTOR

	(Conductor Side)	(Component Side)	*
Q101	B–3		①
Q105	D–3	D–1	–
Q106	D–3	D–1	–
Q201	B–3		①
Q205	C–3	C–1	–
Q206	C–3	C–1	–
Q301	B–3		①
Q305	C–3	C–1	–
Q306	C–3	C–1	–
Q401	A–2		①
Q402		A–1	②
Q403		A–2	②
Q404		B–2	②
Q405		B–2	②
Q406	D–1		①
Q407		D–1	②
Q408	D–3		①
Q409	D–3		①
Q410	D–1	D–3	–

DIODE

	(Conductor Side)	(Component Side)	*
D101		A–1	⑦
D102		A–1	⑦
D103	B–3		③
D104		C–1	③
D105	C–3		③
D106	B–3		③
D107	B–3		③
D201		A–1	⑦
D202		A–1	⑦
D203	B–3		③
D204		C–1	③
D205	C–3		③
D206	B–3		③
D207	B–3		③
D301		A–2	⑦
D302		A–1	⑦
D303	B–3		③
D304		C–1	③
D305	C–2		③
D306	B–2		③
D307	B–3		③
D401		B–2	③
D402	B–3		③
D404	C–3		③
D405	D–3		③
D406	D–3		③
D407		D–1	③
D408	D–1		③
D409		D–1	③

A

SECTION 7
ELECTRICAL PARTS LIST

NOTE:

The components identified by shading and mark ⚠ are critical for safety. Replace only with part number specified.

Les composants identifiés per un tramé et une marque ⚠ sont critiques pour la sécurité. Ne les remplacer que par une piéce portant le numéro spécifié.

When indicating parts by reference number, please include the board name.

The components identified by ⋈ in this manual have been carefully factory-selected for each set in order to satisfy regulations regarding X-ray radiation. Should replacement be required, replace only with the value originally used.

- All variable and adjustable resistors have characteristic curve B, unless otherwise noted.

RESISTORS
- All resistors are in ohms
- F : nonflammable

- Items marked " * " are not stocked since they are seldom required for routine service. Some delay should be anticipated when ordering these items.

- CAPACITORS
  MF : µF
- COILS
  UH : µH

REF.NO.	PART NO.	DESCRIPTION			REMARK
	* 8-933-275-00	A BOARD, COMPLETE			
		**********			
	4-382-854-11	SCREW (M3X10), P, SW (+) (IC403)			
	<CAPACITOR>				
C101	1-164-232-11	CERAMIC CHIP	0.01MF	10%	50V
C102	1-104-664-11	ELECT	47MF	20%	25V
C103	1-164-232-11	CERAMIC CHIP	0.01MF	10%	50V
C104	1-104-664-11	ELECT	47MF	20%	25V
C105	1-164-232-11	CERAMIC CHIP	0.01MF	10%	50V
C106	1-164-232-11	CERAMIC CHIP	0.01MF	10%	50V
C107	1-164-004-11	CERAMIC CHIP	0.1MF	10%	25V
C108	1-107-903-11	ELECT	2.2MF	20%	50V
C109	1-163-237-11	CERAMIC CHIP	27PF	5%	50V
C110	1-163-275-11	CERAMIC CHIP	0.001MF	5%	50V
C111	1-163-017-00	CERAMIC CHIP	0.0047MF	10%	50V
C112	1-164-004-11	CERAMIC CHIP	0.1MF	10%	25V
C115	1-104-514-11	FILM	0.22MF	10%	250V
C120	1-107-949-11	ELECT	2.2MF	20%	200V
C121	1-164-232-11	CERAMIC CHIP	0.01MF	10%	50V
C122	1-164-004-11	CERAMIC CHIP	0.1MF	10%	25V
C127	1-164-232-11	CERAMIC CHIP	0.01MF	10%	50V
C130	1-164-232-11	CERAMIC CHIP	0.01MF	10%	50V
C201	1-164-232-11	CERAMIC CHIP	0.01MF	10%	50V
C202	1-104-664-11	ELECT	47MF	20%	25V
C203	1-164-232-11	CERAMIC CHIP	0.01MF	10%	50V
C204	1-104-664-11	ELECT	47MF	20%	25V
C205	1-164-232-11	CERAMIC CHIP	0.01MF	10%	50V
C206	1-164-232-11	CERAMIC CHIP	0.01MF	10%	50V
C207	1-164-004-11	CERAMIC CHIP	0.1MF	10%	25V
C208	1-107-903-11	ELECT	2.2MF	20%	50V
C209	1-163-235-11	CERAMIC CHIP	22PF	5%	50V
C210	1-163-275-11	CERAMIC CHIP	0.001MF	5%	50V
C211	1-163-017-00	CERAMIC CHIP	0.0047MF	10%	50V
C212	1-164-004-11	CERAMIC CHIP	0.1MF	10%	25V
C215	1-104-514-11	FILM	0.22MF	10%	250V
C217	1-164-232-11	CERAMIC CHIP	0.01MF	10%	50V
C220	1-107-949-11	ELECT	2.2MF	20%	200V
C221	1-164-232-11	CERAMIC CHIP	0.01MF	10%	50V
C222	1-164-004-11	CERAMIC CHIP	0.1MF	10%	25V
C230	1-164-232-11	CERAMIC CHIP	0.01MF	10%	50V
C301	1-164-232-11	CERAMIC CHIP	0.01MF	10%	50V
C302	1-104-664-11	ELECT	47MF	20%	25V
C303	1-164-232-11	CERAMIC CHIP	0.01MF	10%	50V
C304	1-104-664-11	ELECT	47MF	20%	25V
C305	1-164-232-11	CERAMIC CHIP	0.01MF	10%	50V
C306	1-164-232-11	CERAMIC CHIP	0.01MF	10%	50V
C307	1-164-004-11	CERAMIC CHIP	0.1MF	10%	25V
C308	1-107-903-11	ELECT	2.2MF	20%	50V
C309	1-163-099-00	CERAMIC CHIP	18PF	5%	50V
C310	1-163-275-11	CERAMIC CHIP	0.001MF	5%	50V
C311	1-163-017-00	CERAMIC CHIP	0.0047MF	10%	50V
C312	1-164-004-11	CERAMIC CHIP	0.1MF	10%	25V
C315	1-104-514-11	FILM	0.22MF	10%	250V
C317	1-164-232-11	CERAMIC CHIP	0.01MF	10%	50V
C319	1-107-888-11	ELECT	47MF	20%	25V
C320	1-107-949-11	ELECT	2.2MF	20%	200V
C321	1-164-232-11	CERAMIC CHIP	0.01MF	10%	50V
C322	1-164-004-11	CERAMIC CHIP	0.1MF	10%	25V
C330	1-164-232-11	CERAMIC CHIP	0.01MF	10%	50V
C401	1-126-964-11	ELECT	10MF	20%	50V
C402	1-104-664-11	ELECT	47MF	20%	25V
C403	1-104-664-11	ELECT	47MF	20%	25V
C404	1-126-964-11	ELECT	10MF	20%	50V
C405	1-163-227-11	CERAMIC CHIP	10PF	0.5PF	50V
C407	1-126-964-11	ELECT	10MF	20%	50V
C408	1-164-232-11	CERAMIC CHIP	0.01MF	10%	50V
C409	1-163-235-11	CERAMIC CHIP	22PF	5%	50V
C410	1-164-232-11	CERAMIC CHIP	0.01MF	10%	50V
C412	1-164-232-11	CERAMIC CHIP	0.01MF	10%	50V
C414	1-163-239-11	CERAMIC CHIP	33PF	5%	50V
C415	1-128-562-11	ELECT	47MF	20%	100V
C416	1-104-664-11	ELECT	47MF	20%	25V
C417	1-115-349-51	CERAMIC	0.01MF		2KV
C419	1-162-318-11	CERAMIC	0.001MF	10%	500V
C420	1-126-967-11	ELECT	47MF	20%	50V
C421	1-126-964-11	ELECT	10MF	20%	50V
C424	1-164-004-11	CERAMIC CHIP	0.1MF	10%	25V
C429	1-163-227-11	CERAMIC CHIP	10PF	0.5PF	50V
C431	1-164-232-11	CERAMIC CHIP	0.01MF	10%	50V
C434	1-162-318-11	CERAMIC	0.001MF	10%	500V
C435	1-164-232-11	CERAMIC CHIP	0.01MF	10%	50V
C436	1-163-243-11	CERAMIC CHIP	47PF	5%	50V
C438	1-163-243-11	CERAMIC CHIP	47PF	5%	50V

REF.NO.	PART NO.	DESCRIPTION			REMARK
C440	1-163-243-11	CERAMIC CHIP 47PF	5%	50V	
C442	1-163-243-11	CERAMIC CHIP 47PF	5%	50V	
C443	1-163-243-11	CERAMIC CHIP 47PF	5%	50V	
C444	1-163-243-11	CERAMIC CHIP 47PF	5%	50V	
C445	1-163-009-11	CERAMIC CHIP 0.001MF	10%	50V	
C446	1-164-004-11	CERAMIC CHIP 0.1MF	10%	25V	
C447	1-164-004-11	CERAMIC CHIP 0.1MF	10%	25V	
C448	1-164-004-11	CERAMIC CHIP 0.1MF	10%	25V	
C450	1-163-235-11	CERAMIC CHIP 22PF	5%	50V	
C451	1-126-964-11	ELECT 10MF	20%	50V	
C452	1-164-232-11	CERAMIC CHIP 0.01MF	10%	50V	
C453	1-164-232-11	CERAMIC CHIP 0.01MF	10%	50V	
C454	1-104-665-11	ELECT 100MF	20%	25V	
C455	1-163-243-11	CERAMIC CHIP 47PF	5%	50V	
C457	1-164-232-11	CERAMIC CHIP 0.01MF	10%	50V	
C458	1-126-964-11	ELECT 10MF	20%	50V	
C459	1-107-930-91	ELECT 22MF	20%	100V	
C460	1-162-318-11	CERAMIC 0.001MF	10%	500V	
C461	1-164-232-11	CERAMIC CHIP 0.01MF	10%	50V	
C463	1-164-232-11	CERAMIC CHIP 0.01MF	10%	50V	
C464	1-107-906-11	ELECT 10MF	20%	50V	
C465	1-107-906-11	ELECT 10MF	20%	50V	
C466	1-126-964-11	ELECT 10MF	20%	50V	
C467	1-164-232-11	CERAMIC CHIP 0.01MF	10%	50V	
C468	1-126-964-11	ELECT 10MF	20%	50V	
C469	1-126-964-11	ELECT 10MF	20%	50V	
C471	1-162-318-11	CERAMIC 0.001MF	10%	500V	
C478	1-115-350-51	CERAMIC 0.0047MF		2KV	
C479	1-163-133-00	CERAMIC CHIP 470PF	5%	50V	
C481	1-164-232-11	CERAMIC CHIP 0.01MF	10%	50V	
C482	1-115-339-11	CERAMIC CHIP 0.1MF	10%	50V	
C483	1-115-339-11	CERAMIC CHIP 0.1MF	10%	50V	
C484	1-162-318-11	CERAMIC 0.001MF	10%	500V	
C485	1-107-652-11	ELECT 10MF	20%	250V	
C486	1-164-232-11	CERAMIC CHIP 0.01MF	10%	50V	
C487	1-126-964-11	ELECT 10MF	20%	50V	
C488	1-104-664-11	ELECT 47MF	20%	25V	
C489	1-164-004-11	CERAMIC CHIP 0.1MF	10%	25V	
C491	1-164-232-11	CERAMIC CHIP 0.01MF	10%	50V	
	<CONNECTOR>				
CN401*	1-564-521-11	PLUG, CONNECTOR 6P			
CN402*	1-564-522-11	PLUG, CONNECTOR 7P			
CN403	1-564-523-11	PLUG, CONNECTOR 8P			
CN405	1-564-524-11	PLUG, CONNECTOR 9P			
CN406*	1-766-179-11	PIN, CONNECTOR (PC BOARD) 2P			
CN407*	1-564-522-11	PLUG, CONNECTOR 7P			
	<DIODE>				
D101	8-719-062-51	DIODE 1PS226-115			
D102	8-719-062-51	DIODE 1PS226-115			
D103	8-719-404-49	DIODE MA111			
D104	8-719-052-12	DIODE 1SS376TE-17			
D105	8-719-052-12	DIODE 1SS376TE-17			
D106	8-719-052-12	DIODE 1SS376TE-17			
D107	8-719-052-12	DIODE 1SS376TE-17			
D201	8-719-062-51	DIODE 1PS226-115			
D202	8-719-062-51	DIODE 1PS226-115			
D203	8-719-404-49	DIODE MA111			
D204	8-719-052-12	DIODE 1SS376TE-17			
D205	8-719-052-12	DIODE 1SS376TE-17			
D206	8-719-052-12	DIODE 1SS376TE-17			
D207	8-719-052-12	DIODE 1SS376TE-17			
D301	8-719-062-51	DIODE 1PS226-115			
D302	8-719-062-51	DIODE 1PS226-115			
D303	8-719-404-49	DIODE MA111			
D304	8-719-052-12	DIODE 1SS376TE-17			
D305	8-719-052-12	DIODE 1SS376TE-17			
D306	8-719-052-12	DIODE 1SS376TE-17			
D307	8-719-052-12	DIODE 1SS376TE-17			
D401	8-719-404-49	DIODE MA111			
D402	8-719-976-99	ZENER DIODE DTZ5.1B			
D403	8-719-404-49	DIODE MA111			
D404	8-719-052-12	DIODE 1SS376TE-17			
D405	8-719-404-49	DIODE MA111			
D406	8-719-404-49	DIODE MA111			
D407	8-719-404-49	DIODE MA111			
D408	8-719-404-49	DIODE MA111			
D409	8-719-404-49	DIODE MA111			
D410	8-719-404-49	DIODE MA111			
	<FERRITE BEAD>				
FB101	1-216-295-91	SHORT	0		
FB201	1-216-295-91	SHORT	0		
FB301	1-216-295-91	SHORT	0		
FB403	1-412-911-31	INDUCTOR	0UH		
FB405	1-412-911-31	INDUCTOR	0UH		
FB406	1-412-911-31	INDUCTOR	0UH		
	<IC>				
IC401	8-759-445-41	IC M52348FP-TP			
IC402	8-759-468-63	IC M52722P			
IC403	8-749-013-74	IC FA4111			
IC404	8-759-492-78	IC LSC4380DW2EL			
IC406	8-759-231-58	IC TA7812S			
IC408	8-759-239-14	IC TA78L05S			
IC409	8-759-502-82	IC LM324M			
IC410	8-759-635-27	IC M62352GP-75E			
	<COIL>				
L101	1-412-478-11	INDUCTOR	0.15UH		
L201	1-414-137-31	INDUCTOR	0.22UH		
L301	1-414-137-31	INDUCTOR	0.22UH		
L401	1-408-421-00	INDUCTOR	100UH		
L402	1-412-529-11	INDUCTOR	22UH		

A

Les composants identifiés per un tramé et une marque ⚠ sont critiques pour la sécurité. Ne les remplacer que par une piéce portant le numéro spécifié.

The components identified by shading and mark ⚠ are critical for safety. Replace only with part number specified.

REF.NO.	PART NO.	DESCRIPTION		REMARK
		<IC LINK>		
PS401⚠	1-533-590-31	LINK, IC (1A/90V AC, 60V DC)		
		<TRANSISTOR>		
Q101	8-729-112-65	TRANSISTOR 2SA1462-Y33		
Q105	8-729-041-66	TRANSISTOR 2SC4015TV2		
Q106	8-729-200-17	TRANSISTOR 2SA1091-O		
Q201	8-729-112-65	TRANSISTOR 2SA1462-Y33		
Q202	8-729-107-31	TRANSISTOR 2SC3545-T43		
Q205	8-729-041-66	TRANSISTOR 2SC4015TV2		
Q206	8-729-200-17	TRANSISTOR 2SA1091-O		
Q301	8-729-112-65	TRANSISTOR 2SA1462-Y33		
Q305	8-729-041-66	TRANSISTOR 2SC4015TV2		
Q306	8-729-200-17	TRANSISTOR 2SA1091-O		
Q401	8-729-216-22	TRANSISTOR 2SA1162-G		
Q402	8-729-120-28	TRANSISTOR 2SC1623-L5L6		
Q403	8-729-216-22	TRANSISTOR 2SA1162-G		
Q404	8-729-901-00	TRANSISTOR DTC124EK		
Q405	8-729-216-22	TRANSISTOR 2SA1162-G		
Q406	8-729-027-31	TRANSISTOR DTA124EKA-T146		
Q407	8-729-120-28	TRANSISTOR 2SC1623-L5L6		
Q408	8-729-027-31	TRANSISTOR DTA124EKA-T146		
Q409	8-729-120-28	TRANSISTOR 2SC1623-L5L6		
Q410	8-729-020-07	TRANSISTOR 2SC4686A(LBSONY)		
		<RESISTOR>		
R101	1-215-395-00	METAL	82	1% 1/4W
R102	1-216-025-91	RES, CHIP	100	
R103	1-215-395-00	METAL	82	1% 1/4W
R104	1-216-025-91	RES, CHIP	100	
R105	1-216-021-00	RES, CHIP	68	
R106	1-216-019-00	RES, CHIP	56	
R108	1-216-099-00	RES, CHIP	120K	
R109	1-216-107-00	RES, CHIP	270K	
R110	1-216-295-91	SHORT	0	
R111	1-216-049-91	RES, CHIP	1.0K	
R112	1-216-619-11	METAL CHIP	47	0.50%1/10W
R113	1-216-009-00	RES, CHIP	22	
R114	1-216-035-00	RES, CHIP	270	
R115	1-216-035-00	RES, CHIP	270	
R116	1-216-017-91	RES, CHIP	47	
R117	1-216-063-91	RES, CHIP	3.9K	
R118	1-216-057-00	RES, CHIP	2.2K	
R119	1-216-015-00	RES, CHIP	39	
R120	1-216-097-91	RES, CHIP	100K	
R121	1-216-097-91	RES, CHIP	100K	
R122	1-216-027-00	RES, CHIP	120	
R123	1-216-027-00	RES, CHIP	120	
R124	1-219-497-11	CARBON	22	5% 1/2W
R125	1-216-693-11	METAL CHIP	56K	0.50%1/10W
R126	1-216-097-91	RES, CHIP	100K	
R127	1-216-035-00	RES, CHIP	270	
R128	1-216-121-91	RES, CHIP	1.0M	
R129	1-218-776-11	METAL CHIP	1M	0.50%1/10W
R130	1-216-097-91	RES, CHIP	100K	
R131	1-216-057-00	RES, CHIP	2.2K	
R132	1-216-035-00	RES, CHIP	270	
R133	1-216-049-91	RES, CHIP	1.0K	
R134	1-216-097-91	RES, CHIP	100K	
R135	1-216-037-00	RES, CHIP	330	
R136	1-216-097-91	RES, CHIP	100K	
R137	1-216-097-91	RES, CHIP	100K	
R138	1-216-673-11	METAL CHIP	8.2K	0.50%1/10W
R139	1-216-073-00	RES, CHIP	10K	
R140	1-216-129-00	RES, CHIP	2.2M	
R141	1-216-025-91	RES, CHIP	100	
R142	1-216-673-11	METAL CHIP	8.2K	0.50%1/10W
R144	1-216-295-91	SHORT	0	
R167	1-216-121-91	RES, CHIP	1.0M	
R201	1-215-395-00	METAL	82	1% 1/4W
R202	1-216-025-91	RES, CHIP	100	
R203	1-215-395-00	METAL	82	1% 1/4W
R204	1-216-025-91	RES, CHIP	100	
R205	1-216-021-00	RES, CHIP	68	
R206	1-216-015-00	RES, CHIP	39	
R208	1-216-099-00	RES, CHIP	120K	
R209	1-216-107-00	RES, CHIP	270K	
R210	1-216-295-91	SHORT	0	
R211	1-216-049-91	RES, CHIP	1.0K	
R212	1-216-619-11	METAL CHIP	47	0.50%1/10W
R213	1-216-009-00	RES, CHIP	22	
R214	1-216-035-00	RES, CHIP	270	
R215	1-216-035-00	RES, CHIP	270	
R216	1-216-017-91	RES, CHIP	47	
R217	1-216-063-91	RES, CHIP	3.9K	
R218	1-216-057-00	RES, CHIP	2.2K	
R219	1-216-015-00	RES, CHIP	39	
R220	1-216-097-91	RES, CHIP	100K	
R221	1-216-097-91	RES, CHIP	100K	
R222	1-216-027-00	RES, CHIP	120	
R223	1-216-027-00	RES, CHIP	120	
R224	1-219-497-11	CARBON	22	5% 1/2W
R225	1-216-693-11	METAL CHIP	56K	0.50%1/10W
R226	1-216-097-91	RES, CHIP	100K	
R227	1-216-035-00	RES, CHIP	270	
R228	1-216-121-91	RES, CHIP	1.0M	
R229	1-218-776-11	METAL CHIP	1M	0.50%1/10W
R230	1-216-097-91	RES, CHIP	100K	
R231	1-216-057-00	RES, CHIP	2.2K	
R232	1-216-035-00	RES, CHIP	270	
R233	1-216-049-91	RES, CHIP	1.0K	
R234	1-216-097-91	RES, CHIP	100K	
R235	1-216-037-00	RES, CHIP	330	
R236	1-216-097-91	RES, CHIP	100K	
R237	1-216-097-91	RES, CHIP	100K	
R238	1-216-673-11	METAL CHIP	8.2K	0.50%1/10W
R239	1-216-073-00	RES, CHIP	10K	
R240	1-216-129-00	RES, CHIP	2.2M	
R241	1-216-025-91	RES, CHIP	100	
R242	1-216-673-11	METAL CHIP	8.2K	0.50%1/10W

REF.NO.	PART NO.	DESCRIPTION		REMARK
R243	1-216-043-91	RES, CHIP	560	
R244	1-216-295-91	SHORT	0	
R267	1-216-121-91	RES, CHIP	1.0M	
R301	1-215-395-00	METAL	82	1% 1/4W
R302	1-216-025-91	RES, CHIP	100	
R303	1-215-395-00	METAL	82	1% 1/4W
R304	1-216-025-91	RES, CHIP	100	
R305	1-216-021-00	RES, CHIP	68	
R306	1-216-015-00	RES, CHIP	39	
R308	1-216-099-00	RES, CHIP	120K	
R309	1-216-107-00	RES, CHIP	270K	
R310	1-216-295-91	SHORT	0	
R311	1-216-049-91	RES, CHIP	1.0K	
R312	1-216-619-11	METAL CHIP	47	0.50%1/10W
R313	1-216-009-00	RES, CHIP	22	
R314	1-216-035-00	RES, CHIP	270	
R315	1-216-035-00	RES, CHIP	270	
R316	1-216-017-91	RES, CHIP	47	
R317	1-216-063-91	RES, CHIP	3.9K	
R318	1-216-057-00	RES, CHIP	2.2K	
R319	1-216-015-00	RES, CHIP	39	
R320	1-216-097-91	RES, CHIP	100K	
R321	1-216-097-91	RES, CHIP	100K	
R322	1-216-027-00	RES, CHIP	120	
R323	1-216-027-00	RES, CHIP	120	
R324	1-219-497-11	CARBON	22	5% 1/2W
R325	1-216-693-11	METAL CHIP	56K	0.50%1/10W
R326	1-216-097-91	RES, CHIP	100K	
R327	1-216-035-00	RES, CHIP	270	
R328	1-216-121-91	RES, CHIP	1.0M	
R329	1-218-776-11	METAL CHIP	1M	0.50%1/10W
R330	1-216-097-91	RES, CHIP	100K	
R331	1-216-057-00	RES, CHIP	2.2K	
R332	1-216-035-00	RES, CHIP	270	
R333	1-216-049-91	RES, CHIP	1.0K	
R334	1-216-097-91	RES, CHIP	100K	
R335	1-216-037-00	RES, CHIP	330	
R336	1-216-097-91	RES, CHIP	100K	
R337	1-216-097-91	RES, CHIP	100K	
R338	1-216-673-11	METAL CHIP	8.2K	0.50%1/10W
R339	1-216-073-00	RES, CHIP	10K	
R340	1-216-129-00	RES, CHIP	2.2M	
R341	1-216-025-91	RES, CHIP	100	
R342	1-216-673-11	METAL CHIP	8.2K	0.50%1/10W
R344	1-216-295-91	SHORT	0	
R367	1-216-121-91	RES, CHIP	1.0M	
R406	1-216-049-91	RES, CHIP	1.0K	
R407	1-216-089-91	RES, CHIP	47K	
R408	1-216-097-91	RES, CHIP	100K	
R409	1-216-049-91	RES, CHIP	1.0K	
R410	1-216-049-91	RES, CHIP	1.0K	
R411	1-216-065-00	RES, CHIP	4.7K	
R412	1-216-053-00	RES, CHIP	1.5K	
R413	1-216-065-00	RES, CHIP	4.7K	
R415	1-216-065-00	RES, CHIP	4.7K	
R416	1-216-049-91	RES, CHIP	1.0K	
R417	1-216-089-91	RES, CHIP	47K	
R418	1-260-127-11	CARBON	220K	5% 1/2W
R419	1-216-687-11	METAL CHIP	33K	0.50%1/10W
R420	1-216-691-11	METAL CHIP	47K	0.50%1/10W
R421	1-216-103-00	RES, CHIP	180K	
R422	1-216-025-91	RES, CHIP	100	
R423	1-216-089-91	RES, CHIP	47K	
R424	1-216-025-91	RES, CHIP	100	
R425	1-216-017-91	RES, CHIP	47	
R426	1-216-025-91	RES, CHIP	100	
R427	1-216-025-91	RES, CHIP	100	
R428	1-216-049-91	RES, CHIP	1.0K	
R429	1-216-025-91	RES, CHIP	100	
R430	1-216-025-91	RES, CHIP	100	
R431	1-216-025-91	RES, CHIP	100	
R432	1-216-025-91	RES, CHIP	100	
R433	1-216-025-91	RES, CHIP	100	
R434	1-216-065-00	RES, CHIP	4.7K	
R435	1-216-121-91	RES, CHIP	1.0M	
R436	1-216-067-00	RES, CHIP	5.6K	
R438	1-216-053-00	RES, CHIP	1.5K	
R439	1-216-053-00	RES, CHIP	1.5K	
R440	1-216-079-00	RES, CHIP	18K	
R441	1-216-025-91	RES, CHIP	100	
R442	1-216-659-11	METAL CHIP	2.2K	0.50%1/10W
R443	1-216-041-00	RES, CHIP	470	
R444	1-216-057-00	RES, CHIP	2.2K	
R446	1-216-025-91	RES, CHIP	100	
R447	1-216-041-00	RES, CHIP	470	
R448	1-216-057-00	RES, CHIP	2.2K	
R449	1-216-073-00	RES, CHIP	10K	
R450	1-216-079-00	RES, CHIP	18K	
R451	1-216-025-91	RES, CHIP	100	
R452	1-216-065-00	RES, CHIP	4.7K	
R453	1-216-073-00	RES, CHIP	10K	
R454	1-216-073-00	RES, CHIP	10K	
R456	1-216-089-91	RES, CHIP	47K	
R457	1-219-720-11	METAL	10M	5% 1W
R458	1-211-885-21	METAL	2.2M	5% 1W
R459	1-219-720-11	METAL	10M	5% 1W
R461	1-249-441-11	CARBON	100K	5% 1/4W
R462	1-216-089-91	RES, CHIP	47K	
R463	1-216-099-00	RES, CHIP	120K	
R464	1-216-057-00	RES, CHIP	2.2K	
R466	1-216-675-11	METAL CHIP	10K	0.50%1/10W
R470	1-216-065-00	RES, CHIP	4.7K	
R471	1-216-069-00	RES, CHIP	6.8K	
R473	1-216-073-00	RES, CHIP	10K	
R475	1-216-073-00	RES, CHIP	10K	
R477	1-216-081-00	RES, CHIP	22K	
R478	1-249-381-11	CARBON	1	5% 1/4W F
R479	1-249-381-11	CARBON	1	5% 1/4W F
R480	1-249-381-11	CARBON	1	5% 1/4W F

A GA G

Les composants identifiés per un tramé et une marque ⚠ sont critiques pour la sécurité. Ne les remplacer que par une piéce portant le numéro spécifié.

The components identified by shading and mark ⚠ are critical for safety. Replace only with part number specified.

REF.NO.	PART NO.	DESCRIPTION				REMARK
		<SPARK GAP>				
SG101	1-517-499-21	GAP, SPARK				
SG201	1-517-499-21	GAP, SPARK				
SG301	1-517-499-21	GAP, SPARK				
SG401	1-519-526-11	LAMP, NEON				
SG402	1-519-422-11	GAP, SPARK				
SG403	1-519-526-11	LAMP, NEON				
		<SOCKET>				
SK401⚠	1-251-640-11	SOCKET, PICTURE TUBE				

****

*	8-933-269-00	GA BOARD, COMPLETE				
		**********				
		<CAPACITOR>				
C7501	1-164-232-11	CERAMIC CHIP	0.01MF	10%	50V	
C7502	1-136-169-00	FILM	0.22MF	5%	50V	
C7503	1-163-009-11	CERAMIC CHIP	0.001MF	10%	50V	
C7504	1-136-165-00	FILM	0.1MF	5%	50V	
C7505	1-164-004-11	CERAMIC CHIP	0.1MF	10%	25V	
C7506	1-164-004-11	CERAMIC CHIP	0.1MF	10%	25V	
		<CONNECTOR>				
CN7501*	1-774-512-11	CONNECTOR, BPARD TO BOARD 10P				
		<DIODE>				
D7501	8-719-110-57	ZENER DIODE RD22ESB2				
D7502	8-719-911-19	DIODE 1SS119-25				
		<IC>				
IC7501	8-759-482-62	IC MC33262P				
		<TRANSISTOR>				
Q7501	8-729-026-49	TRANSISTOR 2SA1037AK-T146-R				
Q7502	8-729-120-28	TRANSISTOR 2SC1623-L5L6				
Q7503	8-729-120-28	TRANSISTOR 2SC1623-L5L6				
Q7504	8-729-026-49	TRANSISTOR 2SA1037AK-T146-R				
		<RESISTOR>				
R7501	1-216-025-91	RES, CHIP	100			
R7502	1-216-073-00	RES, CHIP	10K			
R7503	1-216-041-00	RES, CHIP	470			
R7504	1-216-675-11	METAL CHIP	10K	0.50%	1/10W	
R7505	1-216-673-11	METAL CHIP	8.2K	0.50%	1/10W	
R7506	1-216-073-00	RES, CHIP	10K			
R7507	1-216-089-91	RES, CHIP	47K			
R7508	1-216-073-00	RES, CHIP	10K			
R7509	1-216-073-00	RES, CHIP	10K			
R7510	1-216-073-00	RES, CHIP	10K			
R7511	1-216-073-00	RES, CHIP	10K			
R7512	1-216-089-91	RES, CHIP	47K			
R7513	1-216-093-00	RES, CHIP	68K			

****

*	8-933-277-00	G BOARD, COMPLETE				
		**********				
	4-382-854-11	SCREW (M3X10), P, SW (+) (IC660,Q610,Q640,D610,D611,D672)				
*	7-322-065-72	RUBBER, RTV (SE-9168) (130G) (R640,C671,C682,VDR640)				
		<CAPACITOR>				
C601 ⚠	1-113-900-51	CERAMIC	470PF	10%	250V	
C602 ⚠	1-113-900-51	CERAMIC	470PF	10%	250V	
C603 ⚠	1-107-533-51	FILM	1MF	20%	250V	
C604 ⚠	1-107-533-51	FILM	1MF	20%	250V	
C605 ⚠	1-113-926-91	CERAMIC	0.0047MF		250V	
C606 ⚠	1-113-926-91	CERAMIC	0.0047MF		250V	
C607	1-113-900-11	CERAMIC	470PF	10%	250V	
C610	1-137-479-11	FILM	1MF	10%	400V	
C611	1-117-849-11	ELECT	330MF	20%	450V	
C612	1-126-959-11	ELECT	0.47MF	20%	50V	
C616	1-107-888-11	ELECT	47MF	20%	25V	
C640	1-165-127-11	CERAMIC	470PF	10%	500V	
C641	1-165-127-11	CERAMIC	470PF	10%	500V	
C642	1-136-171-00	FILM	0.33MF	5%	50V	
C643	1-136-171-00	FILM	0.33MF	5%	50V	
C644	1-165-127-11	CERAMIC	470PF	10%	500V	
C645	1-136-167-00	FILM	0.15MF	5%	50V	
C646	1-136-167-00	FILM	0.15MF	5%	50V	
C647	1-129-719-00	FILM	0.027MF	5%	630V	
C660	1-111-057-11	ELECT	120MF	20%	25V	
C661	1-128-526-11	ELECT	100MF	20%	16V	
C662	1-137-399-11	FILM	0.1MF	5%	50V	
C663	1-126-965-11	ELECT	22MF	20%	50V	
C670	1-137-370-11	FILM	0.01MF	5%	50V	
C671	1-107-966-51	ELECT	220MF	20%	250V	
C672	1-107-959-11	ELECT	3.3MF	20%	250V	
C673	1-107-935-11	ELECT	330MF	20%	100V	
C674	1-107-928-11	ELECT	4.7MF	20%	100V	
C675	1-107-890-11	ELECT	2200MF	20%	25V	
C676	1-107-888-11	ELECT	47MF	20%	25V	
C677	1-107-890-11	ELECT	2200MF	20%	25V	
C678	1-107-888-11	ELECT	47MF	20%	25V	
C679	1-126-927-11	ELECT	2200MF	20%	10V	
C680	1-126-927-11	ELECT	2200MF	20%	10V	
C681	1-107-905-11	ELECT	4.7MF	20%	50V	

G

The components identified by shading and mark ⚠ are critical for safety. Replace only with part number specified.

Les composants identifiés per un tramé et une marque ⚠ sont critiques pour la sécurité. Ne les remplacer que par une piéce portant le numéro spécifié.

REF.NO.	PART NO.	DESCRIPTION				REMARK
C682	1-126-963-11	ELECT	4.7MF	20%	50V	
C683	1-164-646-11	CERAMIC	2200PF	10%	500V	
C684	1-137-370-11	FILM	0.01MF	5%	50V	
C685	1-107-909-11	ELECT	47MF	20%	50V	
C690	1-107-888-11	ELECT	47MF	20%	25V	
C691	1-107-888-11	ELECT	47MF	20%	25V	
C692	1-111-016-11	ELECT	0.0012F	20%	10V	
C693	1-137-399-11	FILM	0.1MF	5%	50V	
C695	1-164-644-11	CERAMIC	330PF	10%	500V	
C697	1-136-165-00	FILM	0.1MF	5%	50V	
	<CONNECTOR>					
CN603*	1-580-689-11	PIN, CONNECTOR (PC BOARD) 4P				
CN604	1-691-960-11	PIN, CONNECTOR (PC BOARD) 3P				
CN605	1-691-960-11	PIN, CONNECTOR (PC BOARD) 3P				
CN610*	1-774-511-11	CONNECTOR, BOARD TO BOARD 10P				
CN671*	1-564-514-11	PLUG, CONNECTOR 11P				
CN672*	1-564-512-11	PLUG, CONNECTOR 9P				
CN673*	1-564-508-11	PLUG, CONNECTOR 5P				
	<DIODE>					
D610 ⚠	8-719-510-53	DIODE D4SB60L				
D611	8-719-029-04	DIODE D5L60				
D612	8-719-304-63	DIODE RM11C				
D613	8-719-110-49	ZENER DIODE RD18ESB2				
D614	8-719-977-28	ZENER DIODE DTZ10B				
D617	8-719-404-49	DIODE MA111				
D640	8-719-404-49	DIODE MA111				
D660	8-719-059-23	DIODE P6KE200AG23				
D661	8-719-979-64	DIODE UF4005PKG23				
D662	8-719-058-91	DIODE AG01A-V0				
D663	8-719-110-31	ZENER DIODE RD12ESB2				
D666	8-719-109-93	ZENER DIODE RD6.2ESB2				
D670	8-719-064-49	DIODE D4SBL40				
D671	8-719-510-64	DIODE S2LA20F				
D672	8-719-052-91	DIODE D4SBS4-F				
D673	8-719-022-97	DIODE D2S4MF				
D674	8-719-022-97	DIODE D2S4MF				
D677	8-719-911-19	DIODE 1SS119-25				
D678	8-719-911-19	DIODE 1SS119-25				
D680	8-719-404-49	DIODE MA111				
D681	8-719-404-49	DIODE MA111				
D682	8-719-510-64	DIODE S2LA20F				
D683	8-719-911-19	DIODE 1SS119-25				
D684	8-719-110-57	ZENER DIODE RD22ESB2				
D691	8-719-510-37	DIODE D5LC20U				
D692	8-719-911-19	DIODE 1SS119-25				
D693	8-719-404-49	DIODE MA111				
	<FUSE>					
F601 ⚠	1-576-233-11	FUSE (H.B.C.) (6.3A/250V)				
	1-533-223-11	HOLDER, FUSE ; F601				
	<FERRITE BEAD>					
FB610	1-410-396-41	INDUCTOR	0.45UH			
FB611	1-410-396-41	INDUCTOR	0.45UH			
FB612	1-410-396-41	INDUCTOR	0.45UH			
	<IC>					
IC630	8-749-013-03	IC DM-60				
IC660	8-759-470-64	IC TOP223Y-BB				
IC690	8-749-011-42	IC SI-3050F				
IC691	8-759-140-85	IC UPC1093J				
	<COIL>					
L610	1-416-409-11	COIL, CHOKE				
L611	1-411-674-11	COIL, CHOKE	68UH			
L670	1-412-529-11	INDUCTOR	22UH			
L671	1-412-529-11	INDUCTOR	22UH			
L672	1-412-529-11	INDUCTOR	22UH			
L673	1-412-529-11	INDUCTOR	22UH			
L691	1-412-529-11	INDUCTOR	22UH			
	<PHOTO COUPLER>					
PH660	8-749-010-64	PHOTO COUPLER PC123F2				
PH680	8-749-010-64	PHOTO COUPLER PC123F2				
	<IC LINK>					
PS670⚠	1-533-593-31	LINK, IC (2A/90V AC, 60V DC)				
PS671⚠	1-533-593-31	LINK, IC (2A/90V AC, 60V DC)				
PS673⚠	1-533-593-31	LINK, IC (2A/90V AC, 60V DC)				
PS674⚠	1-533-593-31	LINK, IC (2A/90V AC, 60V DC)				
	<TRANSISTOR>					
Q610	8-729-041-65	TRANSISTOR 2SK2195F04				
Q615	8-729-026-49	TRANSISTOR 2SA1037AK-T146-R				
Q640	8-729-041-12	TRANSISTOR MX0841AB-F				
Q641	8-729-119-76	TRANSISTOR 2SA1175-HFE				
Q642	8-729-119-78	TRANSISTOR 2SC2785-HFE				
Q660	8-729-119-78	TRANSISTOR 2SC2785-HFE				
Q680	8-729-120-28	TRANSISTOR 2SC1623-L5L6				
Q681	8-729-230-45	TRANSISTOR 2SC2458-YGR				
Q682	8-729-119-76	TRANSISTOR 2SA1175-HFE				
Q683	8-729-119-76	TRANSISTOR 2SA1175-HFE				
Q690	8-729-119-78	TRANSISTOR 2SC2785-HFE				
Q691	8-729-026-49	TRANSISTOR 2SA1037AK-T146-R				
	<RESISTOR>					
R601 ⚠	1-220-825-91	CARBON	330K	5%	1/2W	
R604	1-260-089-11	CARBON	150	5%	1/2W	
R610	1-216-383-11	METAL OXIDE	0.33	5%	3W	F
R611	1-216-383-11	METAL OXIDE	0.33	5%	3W	F
R612	1-215-477-00	METAL	220K	1%	1/4W	

G D

Les composants identifiés per un tramé et une marque ⚠ sont critiques pour la sécurité. Ne les remplacer que par une piéce portant le numéro spécifié.

The components identified by shading and mark ⚠ are critical for safety. Replace only with part number specified.

REF.NO.	PART NO.	DESCRIPTION			REMARK
R613	1-215-477-00	METAL	220K	1%	1/4W
R614	1-215-473-00	METAL	150K	1%	1/4W
R615	1-215-473-00	METAL	150K	1%	1/4W
R616	1-215-473-00	METAL	150K	1%	1/4W
R617	1-215-481-00	METAL	330K	1%	1/4W
R618	1-215-477-00	METAL	220K	1%	1/4W
R619	1-215-485-00	METAL	470K	1%	1/4W
R620	1-215-485-00	METAL	470K	1%	1/4W
R621	1-215-481-00	METAL	330K	1%	1/4W
R622	1-216-049-91	RES, CHIP	1.0K		
R623	1-216-651-11	METAL CHIP	1K	0.50%	1/10W
R624	1-216-671-11	METAL CHIP	6.8K	0.50%	1/10W
R625	1-249-389-11	CARBON	4.7	5%	1/4W
R626	1-249-429-11	CARBON	10K	5%	1/4W
R627	1-215-479-00	METAL	270K	1%	1/4W
R628	1-215-481-00	METAL	330K	1%	1/4W
R629	1-215-461-00	METAL	47K	1%	1/4W
R631	1-247-807-31	CARBON	100	5%	1/4W
R632	1-216-073-00	RES, CHIP	10K		
R633	1-215-481-00	METAL	330K	1%	1/4W
R635	1-216-073-00	RES, CHIP	10K		
R640	1-202-933-61	FUSIBLE	0.1	10%	1/2W F
R641	1-218-642-11	METAL OXIDE	100K	5%	1W F
R642	1-218-642-11	METAL OXIDE	100K	5%	1W F
R643	1-247-863-91	CARBON	22K	5%	1/4W
R644	1-216-105-91	RES, CHIP	220K		
R645	1-216-081-00	RES, CHIP	22K		
R646	1-216-073-00	RES, CHIP	10K		
R647	1-249-441-11	CARBON	100K	5%	1/4W
R648	1-216-353-00	METAL OXIDE	2.2	5%	1W F
R649	1-218-642-11	METAL OXIDE	100K	5%	1W F
R650	1-218-642-11	METAL OXIDE	100K	5%	1W F
R651	1-216-353-00	METAL OXIDE	2.2	5%	1W F
R652	1-212-942-00	FUSIBLE	2.2	5%	1/2W F
R655	1-216-073-00	RES, CHIP	10K		
R661	1-249-387-11	CARBON	3.3	5%	1/4W F
R662	1-216-073-00	RES, CHIP	10K		
R663	1-216-073-00	RES, CHIP	10K		
R664	1-247-791-91	CARBON	22	5%	1/4W
R665	1-216-033-00	RES, CHIP	220		
R666	1-215-441-00	METAL	6.8K	1%	1/4W
R667	1-215-433-00	METAL	3.3K	1%	1/4W
R668	1-249-401-11	CARBON	47	5%	1/4W
R669	1-216-057-00	RES, CHIP	2.2K		
R671	1-216-113-00	RES, CHIP	470K		
R672	1-216-049-91	RES, CHIP	1.0K		
R673	1-249-413-11	CARBON	470	5%	1/4W F
R674	1-249-377-11	CARBON	0.47	5%	1/4W F
R675	1-260-292-11	CARBON	1	5%	1/2W
R676	1-249-413-11	CARBON	470	5%	1/4W
R680	1-216-073-00	RES, CHIP	10K		
R681	1-216-049-91	RES, CHIP	1.0K		
R682	1-216-065-00	RES, CHIP	4.7K		
R683	1-216-025-91	RES, CHIP	100		
R685	1-216-073-00	RES, CHIP	10K		
R686	1-216-049-91	RES, CHIP	1.0K		
R687	1-216-049-91	RES, CHIP	1.0K		
R688	1-216-073-00	RES, CHIP	10K		
R689	1-216-073-00	RES, CHIP	10K		
R691	1-216-073-00	RES, CHIP	10K		
R692	1-260-085-11	CARBON	68	5%	1/2W
R693	1-216-065-00	RES, CHIP	4.7K		
R694	1-216-073-00	RES, CHIP	10K		
R695	1-249-443-11	CARBON	0.47	5%	1/4W F
R696	1-216-633-11	METAL CHIP	180	0.50%	1/10W
R697	1-216-649-11	METAL CHIP	820	0.50%	1/10W
R698	1-216-073-00	RES, CHIP	10K		
R699	1-216-081-00	RES, CHIP	22K		

<RELAY>

RY601	⚠1-515-669-21	RELAY	
RY602	⚠1-755-031-11	RELAY	

<TRANSFORMER>

T601	⚠1-429-180-11	TRANSFORMER, LINE FILTER	
T640	1-431-538-11	TRANSFORMER, CONVERTER (PIT)	
T641	1-429-992-11	TRANSFORMER, CONVERTER (PRT)	
T660	1-431-565-11	TRANSFORMER, CONVERTER (SRT)	

<THERMISTOR>

TH601	⚠1-809-260-11	THERMISTOR, POWER	
THP601	⚠1-809-827-11	THERMISTOR, POSITIVE	

<VARISTOR>

VDR601	⚠1-801-268-51	VARISTOR TNR14V471K660	
VDR602	⚠1-810-622-21	VARISTOR	
VDR640	1-810-974-21	VARISTOR TNR10V431K660	

****

*	8-933-295-00	D BOARD, COMPLETE
		**********
	4-040-989-01	SPRING (A), TR RETAINER (IC702, R511)
	4-040-992-01	SPRING (AA), TR RETAINER (IC502, Q507)
	4-040-994-01	SPRING (BB), TR RETAINER (Q508, D519)
	4-047-285-01	SHEET, INSULATING (Q909)
	4-060-719-02	SHEET, INSULATE (IC502)
	4-060-720-01	SHEET, INSULATE (Q508)
	4-060-844-01	SHEET, INSULATING (IC702)
	4-382-854-01	SCREW (M3X8), P, SW (+) (R937)
	4-382-854-11	SCREW (M3X10), P, SW (+) (IC702, Q704, Q706, Q908, Q909, R937)
*	7-322-065-72	RUBBER, RTV (SE-9168) (130G) (C511, C518)
	7-685-647-79	SCREW +BVTP 3X10 TYPE2 IT-3 (IC502, Q507, Q508, D519, R511)

D

REF.NO.	PART NO.	DESCRIPTION			REMARK
	<CAPACITOR>				
C001	1-164-232-11	CERAMIC CHIP	0.01MF	10%	50V
C002	1-163-009-11	CERAMIC CHIP	0.001MF	10%	50V
C003	1-163-019-00	CERAMIC CHIP	0.0068MF	10%	50V
C004	1-164-232-11	CERAMIC CHIP	0.01MF	10%	50V
C005	1-164-232-11	CERAMIC CHIP	0.01MF	10%	50V
C006	1-126-960-11	ELECT	1MF	20%	50V
C007	1-164-232-11	CERAMIC CHIP	0.01MF	10%	50V
C008	1-164-004-11	CERAMIC CHIP	0.1MF	10%	25V
C009	1-164-004-11	CERAMIC CHIP	0.1MF	10%	25V
C010	1-163-235-11	CERAMIC CHIP	22PF	5%	50V
C011	1-163-235-11	CERAMIC CHIP	22PF	5%	50V
C012	1-164-004-11	CERAMIC CHIP	0.1MF	10%	25V
C013	1-126-967-11	ELECT	47MF	20%	50V
C014	1-107-914-11	ELECT	1000MF	20%	25V
C015	1-107-914-11	ELECT	1000MF	20%	25V
C016	1-163-009-11	CERAMIC CHIP	0.001MF	10%	50V
C017	1-164-004-11	CERAMIC CHIP	0.1MF	10%	25V
C018	1-164-004-11	CERAMIC CHIP	0.1MF	10%	25V
C019	1-126-967-11	ELECT	47MF	20%	50V
C020	1-164-232-11	CERAMIC CHIP	0.01MF	10%	50V
C021	1-163-023-00	CERAMIC CHIP	0.015MF	10%	50V
C022	1-126-933-11	ELECT	100MF	20%	16V
C023	1-163-009-11	CERAMIC CHIP	0.001MF	10%	50V
C024	1-164-232-11	CERAMIC CHIP	0.01MF	10%	50V
C025	1-126-960-11	ELECT	1MF	20%	50V
C026	1-137-372-11	FILM	0.022MF	5%	50V
C027	1-164-004-11	CERAMIC CHIP	0.1MF	10%	25V
C028	1-164-695-11	CERAMIC CHIP	0.0022MF	5%	50V
C029	1-126-960-11	ELECT	1MF	20%	50V
C030	1-164-004-11	CERAMIC CHIP	0.1MF	10%	25V
C031	1-164-232-11	CERAMIC CHIP	0.01MF	10%	50V
C032	1-163-019-00	CERAMIC CHIP	0.0068MF	10%	50V
C034	1-164-232-11	CERAMIC CHIP	0.01MF	10%	50V
C035	1-163-253-11	CERAMIC CHIP	120PF	5%	50V
C036	1-164-004-11	CERAMIC CHIP	0.1MF	10%	25V
C037	1-126-934-11	ELECT	220MF	20%	16V
C038	1-164-004-11	CERAMIC CHIP	0.1MF	10%	25V
C039	1-126-964-11	ELECT	10MF	20%	50V
C040	1-126-963-11	ELECT	4.7MF	20%	50V
C041	1-126-960-11	ELECT	1MF	20%	50V
C042	1-126-967-11	ELECT	47MF	20%	50V
C043	1-126-967-11	ELECT	47MF	20%	50V
C044	1-126-967-11	ELECT	47MF	20%	50V
C045	1-163-137-00	CERAMIC CHIP	680PF	5%	50V
C046	1-164-004-11	CERAMIC CHIP	0.1MF	10%	25V
C047	1-126-934-11	ELECT	220MF	20%	16V
C048	1-164-695-11	CERAMIC CHIP	0.0022MF	5%	50V
C049	1-163-137-00	CERAMIC CHIP	680PF	5%	50V
C050	1-163-809-11	CERAMIC CHIP	0.047MF	10%	25V
C051	1-126-960-11	ELECT	1MF	20%	50V
C052	1-163-809-11	CERAMIC CHIP	0.047MF	10%	25V
C054	1-126-963-11	ELECT	4.7MF	20%	50V
C055	1-126-963-11	ELECT	4.7MF	20%	50V
C056	1-163-809-11	CERAMIC CHIP	0.047MF	10%	25V
C057	1-107-909-11	ELECT	47MF	20%	50V
C058	1-126-964-11	ELECT	10MF	20%	50V
C059	1-164-232-11	CERAMIC CHIP	0.01MF	10%	50V
C060	1-126-964-11	ELECT	10MF	20%	50V
C061	1-164-232-11	CERAMIC CHIP	0.01MF	10%	50V
C062	1-164-004-11	CERAMIC CHIP	0.1MF	10%	25V
C063	1-137-399-11	FILM	0.1MF	5%	50V
C065	1-126-965-11	ELECT	22MF	20%	50V
C066	1-164-232-11	CERAMIC CHIP	0.01MF	10%	50V
C067	1-163-243-11	CERAMIC CHIP	47PF	5%	50V
C068	1-126-964-11	ELECT	10MF	20%	50V
C069	1-164-232-11	CERAMIC CHIP	0.01MF	10%	50V
C070	1-164-232-11	CERAMIC CHIP	0.01MF	10%	50V
C072	1-126-960-11	ELECT	1MF	20%	50V
C074	1-163-009-11	CERAMIC CHIP	0.001MF	10%	50V
C075	1-164-232-11	CERAMIC CHIP	0.01MF	10%	50V
C076	1-163-809-11	CERAMIC CHIP	0.047MF	10%	25V
C077	1-164-004-11	CERAMIC CHIP	0.1MF	10%	25V
C078	1-164-004-11	CERAMIC CHIP	0.1MF	10%	25V
C079	1-126-967-11	ELECT	47MF	20%	50V
C080	1-126-967-11	ELECT	47MF	20%	50V
C081	1-164-232-11	CERAMIC CHIP	0.01MF	10%	50V
C082	1-126-964-11	ELECT	10MF	20%	50V
C084	1-164-004-11	CERAMIC CHIP	0.1MF	10%	25V
C085	1-137-399-11	FILM	0.1MF	5%	50V
C086	1-126-964-11	ELECT	10MF	20%	50V
C087	1-164-004-11	CERAMIC CHIP	0.1MF	10%	25V
C088	1-163-251-11	CERAMIC CHIP	100PF	5%	50V
C089	1-163-251-11	CERAMIC CHIP	100PF	5%	50V
C092	1-164-232-11	CERAMIC CHIP	0.01MF	10%	50V
C093	1-126-964-11	ELECT	10MF	20%	50V
C094	1-164-232-11	CERAMIC CHIP	0.01MF	10%	50V
C095	1-164-232-11	CERAMIC CHIP	0.01MF	10%	50V
C096	1-164-232-11	CERAMIC CHIP	0.01MF	10%	50V
C097	1-164-232-11	CERAMIC CHIP	0.01MF	10%	50V
C098	1-164-232-11	CERAMIC CHIP	0.01MF	10%	50V
C099	1-164-004-11	CERAMIC CHIP	0.1MF	10%	25V
C501	1-107-909-11	ELECT	47MF	20%	50V
C502	1-163-259-91	CERAMIC CHIP	220PF	5%	50V
C503	1-136-169-00	FILM	0.22MF	5%	50V
C504	1-137-605-11	FILM	0.01MF	10%	250V
C505	1-163-251-11	CERAMIC CHIP	100PF	5%	50V
C506	1-136-169-00	FILM	0.22MF	5%	50V
C507	1-136-173-00	FILM	0.47MF	5%	50V
C508	1-163-037-11	CERAMIC CHIP	0.022MF	10%	50V
C509	1-126-941-11	ELECT	470MF	20%	25V
C510	1-137-368-11	FILM	0.0047MF	5%	50V
C511	1-117-398-11	ELECT	33MF	20%	250V
C512	1-107-889-11	ELECT	220MF	20%	25V
C513	1-163-017-00	CERAMIC CHIP	0.0047MF	10%	50V
C514	1-164-232-11	CERAMIC CHIP	0.01MF	10%	50V
C515	1-107-889-11	ELECT	220MF	20%	25V
C516	1-137-399-11	FILM	0.1MF	5%	50V
C517	1-104-574-11	CERAMIC	0.0047MF	10%	2KV
C518	1-117-959-11	FILM	4700PF	3%	1.8KV
C519	1-107-444-11	CERAMIC	100PF	5%	2KV
C520	1-136-553-11	FILM	0.0015MF	5%	630V

D

REF.NO.	PART NO.	DESCRIPTION			REMARK
C521	1-162-815-11	CERAMIC	47PF	5%	500V
C522	1-107-444-11	CERAMIC	100PF	5%	2KV
C523	1-137-370-11	FILM	0.01MF	5%	50V
C524	1-113-694-11	FILM	0.056MF	5%	250V
C525	1-107-846-11	FILM	0.1MF	5%	250V
C526	1-115-514-11	FILM	0.22MF	5%	250V
C527	1-115-517-11	FILM	0.39MF	5%	250V
C528	1-115-521-11	FILM	0.82MF	5%	250V
C529	1-107-683-11	ELECT	2.2MF	0	250V
C530	1-164-232-11	CERAMIC CHIP	0.01MF	10%	50V
C531	1-164-232-11	CERAMIC CHIP	0.01MF	10%	50V
C532	1-164-232-11	CERAMIC CHIP	0.01MF	10%	50V
C533	1-164-232-11	CERAMIC CHIP	0.01MF	10%	50V
C534	1-164-232-11	CERAMIC CHIP	0.01MF	10%	50V
C535	1-164-232-11	CERAMIC CHIP	0.01MF	10%	50V
C536	1-128-526-11	ELECT	100MF	20%	25V
C537	1-115-523-21	FILM	1.2MF	5%	250V
C538	1-117-958-11	FILM	0.24MF	5%	400V
C539	1-107-960-11	ELECT	4.7MF	20%	250V
C540	1-106-343-00	MYLAR	0.001MF	10%	200V
C541	1-163-243-11	CERAMIC CHIP	47PF	5%	50V
C542	1-163-243-11	CERAMIC CHIP	47PF	5%	50V
C544	1-137-368-11	FILM	0.0047MF	5%	50V
C545	1-126-967-11	ELECT	47MF	20%	50V
C547	1-126-967-11	ELECT	47MF	20%	50V
C549	1-164-232-11	CERAMIC CHIP	0.01MF	10%	50V
C550	1-164-232-11	CERAMIC CHIP	0.01MF	10%	50V
C551	1-163-009-11	CERAMIC CHIP	0.001MF	10%	50V
C553	1-126-963-11	ELECT	4.7MF	20%	50V
C554	1-163-037-11	CERAMIC CHIP	0.022MF	10%	50V
C555	1-163-037-11	CERAMIC CHIP	0.022MF	10%	50V
C556	1-163-009-11	CERAMIC CHIP	0.001MF	10%	50V
C557	1-115-185-11	CERAMIC CHIP	0.033MF	10%	50V
C559	1-162-134-11	CERAMIC	470PF	10%	2KV
C561	1-136-173-00	FILM	0.47MF	5%	50V
C562	1-164-232-11	CERAMIC CHIP	0.01MF	10%	50V
C563	1-117-214-11	CERAMIC	0.001MF	10%	2KV
C564	1-126-963-11	ELECT	4.7MF	20%	50V
C666	1-164-232-11	CERAMIC CHIP	0.01MF	10%	50V
C667	1-126-967-11	ELECT	47MF	20%	50V
C701	1-126-967-11	ELECT	47MF	20%	50V
C702	1-137-399-11	FILM	0.1MF	5%	50V
C705	1-126-942-61	ELECT	1000MF	20%	25V
C706	1-164-232-11	CERAMIC CHIP	0.01MF	10%	50V
C707	1-164-232-11	CERAMIC CHIP	0.01MF	10%	50V
C709	1-137-399-11	FILM	0.1MF	5%	50V
C710	1-163-019-00	CERAMIC CHIP	0.0068MF	10%	50V
C711	1-107-894-11	ELECT	220MF	20%	35V
C712	1-106-228-00	MYLAR	0.22MF	10%	100V
C713	1-126-942-61	ELECT	1000MF	20%	25V
C714	1-126-967-11	ELECT	47MF	20%	50V
C715	1-107-932-11	ELECT	47MF	20%	100V
C717	1-107-930-91	ELECT	22MF	20%	100V
C729	1-162-134-11	CERAMIC	470PF	10%	2KV
C735	1-137-399-11	FILM	0.1MF	5%	50V
C746	1-163-009-11	CERAMIC CHIP	0.001MF	10%	50V
C747	1-164-232-11	CERAMIC CHIP	0.01MF	10%	50V
C750	1-126-964-11	ELECT	10MF	20%	50V
C751	1-164-232-11	CERAMIC CHIP	0.01MF	10%	50V
C901	1-107-889-11	ELECT	220MF	20%	25V
C902	1-163-809-11	CERAMIC CHIP	0.047MF	10%	25V
C903	1-163-259-91	CERAMIC CHIP	220PF	5%	50V
C904	1-137-605-11	FILM	0.01MF	10%	250V
C905	1-104-653-11	ELECT	220MF	20%	16V
C906	1-106-220-00	MYLAR	0.1MF	10%	100V
C907	1-119-748-11	ELECT	33MF	20%	400V
C908	1-136-169-00	FILM	0.22MF	5%	50V
C909	1-106-355-12	MYLAR	0.0033MF	10%	200V
C910	1-164-232-11	CERAMIC CHIP	0.01MF	10%	50V
C911	1-163-275-11	CERAMIC CHIP	0.001MF	5%	50V
C912	1-163-275-11	CERAMIC CHIP	0.001MF	5%	50V
C913	1-164-004-11	CERAMIC CHIP	0.1MF	10%	25V
C914	1-163-275-11	CERAMIC CHIP	0.001MF	5%	50V
C915	1-164-232-11	CERAMIC CHIP	0.01MF	10%	50V
C916	1-136-064-00	FILM	2200PF	3%	1.2KV
C917	1-107-889-11	ELECT	220MF	20%	25V
C919	1-164-232-11	CERAMIC CHIP	0.01MF	10%	50V
C920	1-163-009-11	CERAMIC CHIP	0.001MF	10%	50V
C921	1-163-243-11	CERAMIC CHIP	47PF	5%	50V
C922	1-117-665-11	FILM	0.33MF	5%	200V
C923	1-106-359-00	MYLAR	0.0047MF	10%	100V
C924	1-106-220-00	MYLAR	0.1MF	10%	100V
C925	1-137-372-11	FILM	0.022MF	5%	50V
C926	1-106-228-00	MYLAR	0.22MF	10%	100V
C927	1-107-903-11	ELECT	2.2MF	20%	50V
C928	1-164-232-11	CERAMIC CHIP	0.01MF	10%	50V
C929	1-128-526-11	ELECT	100MF	20%	25V
C930	1-164-232-11	CERAMIC CHIP	0.01MF	10%	50V
C931	1-164-232-11	CERAMIC CHIP	0.01MF	10%	50V
C945	1-107-909-11	ELECT	47MF	20%	50V
C1003	1-164-232-11	CERAMIC CHIP	0.01MF	10%	50V
C1004	1-164-232-11	CERAMIC CHIP	0.01MF	10%	50V
C1005	1-164-232-11	CERAMIC CHIP	0.01MF	10%	50V
C1006	1-164-232-11	CERAMIC CHIP	0.01MF	10%	50V
C1007	1-164-232-11	CERAMIC CHIP	0.01MF	10%	50V
C1008	1-164-232-11	CERAMIC CHIP	0.01MF	10%	50V
C1009	1-126-960-11	ELECT	1MF	20%	50V
C1501	1-164-232-11	CERAMIC CHIP	0.01MF	10%	50V
C1502	1-117-722-11	ELECT	2200MF	20%	10V
C1503	1-163-001-11	CERAMIC CHIP	220PF	10%	50V

<CONNECTOR>

CN501*	1-564-512-11	PLUG, CONNECTOR 9P	
CN502*	1-564-514-11	PLUG, CONNECTOR 11P	
CN503*	1-564-510-11	PLUG, CONNECTOR 7P	
CN504*	1-564-508-11	PLUG, CONNECTOR 5P	
CN505*	1-508-879-11	BASE POST	
CN506*	1-564-511-11	PLUG, CONNECTOR 8P	
CN507	1-764-101-11	PIN, CONNECTOR (PC BOARD) 2P	
CN508*	1-778-955-11	PIN, CONNECTOR (PC BOARD) 10P	
CN509	1-564-505-11	PLUG, CONNECTOR 2P	

REF.NO.	PART NO.	DESCRIPTION	REMARK
CN511*	1-564-514-11	PLUG, CONNECTOR 11P	
CN512*	1-564-512-11	PLUG, CONNECTOR 9P	
CN520*	1-564-509-11	PLUG, CONNECTOR 6P	
CN901*	1-564-520-11	PLUG, CONNECTOR 5P	
		<DIODE>	
D004	8-719-800-76	DIODE 1SS226	
D007	8-719-976-99	ZENER DIODE DTZ5.1B	
D008	8-719-976-99	ZENER DIODE DTZ5.1B	
D009	8-719-976-99	ZENER DIODE DTZ5.1B	
D010	8-719-976-99	ZENER DIODE DTZ5.1B	
D012	8-719-800-76	DIODE 1SS226	
D013	8-719-800-76	DIODE 1SS226	
D014	8-719-800-76	DIODE 1SS226	
D015	8-719-800-76	DIODE 1SS226	
D016	8-719-800-76	DIODE 1SS226	
D019	8-719-800-76	DIODE 1SS226	
D020	8-719-800-76	DIODE 1SS226	
D025	8-719-056-84	ZENER DIODE UDZ-TE-17-7.5B	
D026	8-719-800-76	DIODE 1SS226	
D027	8-719-800-76	DIODE 1SS226	
D028	8-719-800-76	DIODE 1SS226	
D029	8-719-800-76	DIODE 1SS226	
D032	8-719-976-99	ZENER DIODE DTZ5.1B	
D033	8-719-976-99	ZENER DIODE DTZ5.1B	
D034	8-719-801-78	DIODE 1SS184	
D035	8-719-801-78	DIODE 1SS184	
D050	8-719-404-49	DIODE MA111	
D501	8-719-977-40	ZENER DIODE DTZ13B	
D502	8-719-063-89	DIODE YG911S3R	
D503	8-719-404-49	DIODE MA111	
D504	8-719-984-73	DIODE SB560	
D505	8-719-018-82	DIODE RGP02-20EL-6394	
D506	8-719-911-19	DIODE 1SS119-25	
D507	8-719-911-19	DIODE 1SS119-25	
D508	8-719-109-85	ZENER DIODE RD5.1ESB2	
D509	8-719-911-19	DIODE 1SS119-25	
D510	8-719-951-30	DIODE ERA91-02	
D511	8-719-911-19	DIODE 1SS119-25	
D512	8-719-018-82	DIODE RGP02-20EL-6394	
D513	8-719-404-49	DIODE MA111	
D514	8-719-109-93	ZENER DIODE RD6.2ESB2	
D515	8-719-404-49	DIODE MA111	
D516	8-719-105-99	ZENER DIODE RD6.2M-B1	
D517	8-719-105-99	ZENER DIODE RD6.2M-B1	
D518	8-719-404-49	DIODE MA111	
D519	8-719-066-36	DIODE FMQ-G5GS	
D520	8-719-031-34	DIODE RGP02-20EG23	
D521	8-719-404-49	DIODE MA111	
D660	8-719-977-69	ZENER DIODE DTZ24B	
D701	8-719-158-15	ZENER DIODE RD5.6SB	
D704	8-719-404-49	DIODE MA111	
D705	8-719-404-49	DIODE MA111	
D706	8-719-976-99	ZENER DIODE DTZ5.1B	
D709	8-719-979-85	DIODE EGP20G	
D713	8-719-911-19	DIODE 1SS119-25	
D714	8-719-911-19	DIODE 1SS119-25	
D715	8-719-911-19	DIODE 1SS119-25	
D718	8-719-976-99	ZENER DIODE DTZ5.1B	
D720	8-719-028-72	DIODE RGP02-17EL-6433	
D721	8-719-028-72	DIODE RGP02-17EL-6433	
D901	8-719-404-49	DIODE MA111	
D902	8-719-404-49	DIODE MA111	
D903	8-719-911-19	DIODE 1SS119-25	
D904	8-719-404-49	DIODE MA111	
D905	8-719-404-49	DIODE MA111	
D906	8-719-404-49	DIODE MA111	
D907	8-719-158-49	ZENER DIODE RD12SB2	
D908	8-719-158-49	ZENER DIODE RD12SB2	
D909	8-719-977-40	ZENER DIODE DTZ13B	
D910	8-719-063-89	DIODE YG911S3R	
D911	8-719-978-69	ZENER DIODE DTZ-TT11-16B	
D913	8-719-158-49	ZENER DIODE RD12SB2	
D915	8-719-109-85	ZENER DIODE RD5.1ESB2	
D916	8-719-939-79	DIODE GMA01-BT	
D917	8-719-110-46	ZENER DIODE RD16ESB3	
D919	8-719-911-19	DIODE 1SS119-25	
D921	8-719-404-49	DIODE MA111	
D922	8-719-404-49	DIODE MA111	
D923	8-719-404-49	DIODE MA111	
D924	8-719-976-99	ZENER DIODE DTZ5.1B	
D935	8-719-977-81	ZENER DIODE DTZ33B	
D1501	8-719-976-99	ZENER DIODE DTZ5.1B	
D1502	8-719-404-49	DIODE MA111	
D1503	8-719-404-49	DIODE MA111	
		<FERRITE BEAD>	
FB501	1-410-397-21	INDUCTOR 1.1UH	
FB502	1-410-397-21	INDUCTOR 1.1UH	
FB901	1-410-397-21	INDUCTOR 1.1UH	
FB1025	1-414-232-11	INDUCTOR 0UH	
FB1026	1-414-232-11	INDUCTOR 0UH	
		<IC>	
IC001	8-759-499-98	IC MB90553PF-G-112-BND	
IC002	8-759-442-20	IC 24LC21A/SN	
IC003	8-759-168-20	IC TA78L09S	
IC004	8-759-454-79	IC 24LC16BT/SN	
IC005	8-759-162-80	IC MM1170BFB	
IC006	8-759-231-53	IC TA7805S	
IC007	8-752-078-46	IC CXA2043Q	
IC008	8-759-701-59	IC NJM78M09FA	
IC009	8-759-082-57	IC TC7W04FU	
IC010	8-752-083-83	IC CXA2044M-T6	
IC011	8-759-708-05	IC NJM78L05A	
IC012	8-759-442-20	IC 24LC21A/SN	
IC013	8-759-233-66	IC TC74HCT04AF	
IC502	8-759-803-42	IC LA6500-FA	
IC505	8-759-100-96	IC UPC4558G2	

D

Les composants identifiés per un tramé et une marque ⚠ sont critiques pour la sécurité. Ne les remplacer que par une piéce portant le numéro spécifié.

The components identified by shading and mark ⚠ are critical for safety. Replace only with part number specified.

REF.NO.	PART NO.	DESCRIPTION	REMARK
IC701	8-759-822-38	IC LA6510	
IC702	8-759-444-82	IC LA7841L	
IC703	8-759-100-96	IC UPC4558G2	
IC901	8-759-467-70	IC BA9756FS-E2	
		<CHIP CONDUCTOR>	
JR001	1-216-295-91	SHORT 0	
JR002	1-216-295-91	SHORT 0	
JR003	1-216-295-91	SHORT 0	
JR004	1-216-295-91	SHORT 0	
		<COIL>	
L001	1-406-665-11	COIL, CHOKE 100UH	
L002	1-406-665-11	COIL, CHOKE 100UH	
L003	1-412-537-31	INDUCTOR 100UH	
L004	1-412-537-31	INDUCTOR 100UH	
L006	1-410-482-31	INDUCTOR 100UH	
L007	1-412-537-31	INDUCTOR 100UH	
L008	1-412-537-31	INDUCTOR 100UH	
L501	1-412-537-31	INDUCTOR 100UH	
L502	1-406-671-11	COIL, CHOKE 1.0MMH	
L503	1-416-455-11	COIL, HORIZONTAL LINEARITY	
L504	1-416-456-11	COIL, HORIZONTAL LINEARITY	
L505	1-406-675-11	COIL, CHOKE 4.7MMH	
L507	1-406-675-11	COIL, CHOKE 4.7MMH	
L701	1-412-537-31	INDUCTOR 100UH	
L702	1-412-522-41	INDUCTOR 5.6UH	
L901	1-412-537-31	INDUCTOR 100UH	
L902	1-406-660-41	COIL, CHOKE 15UH	
L903	1-412-537-31	INDUCTOR 100UH	
		<IC LINK>	
PS501⚠	1-533-592-31	LINK, IC (1.6A/90V AC, 60V DC)	
PS502⚠	1-532-984-91	LINK, IC (2A/90V)	
PS503⚠	1-532-984-91	LINK, IC (2A/90V)	
PS504⚠	1-532-984-91	LINK, IC (2A/90V)	
PS701⚠	1-533-590-31	LINK, IC (1A/90V AC, 60V DC)	
PS901⚠	1-533-592-31	LINK, IC (1.6A/90V AC, 60V DC)	
		<TRANSISTOR>	
Q001	8-729-027-31	TRANSISTOR DTA124EKA-T146	
Q003	8-729-216-22	TRANSISTOR 2SA1162-G	
Q004	8-729-216-22	TRANSISTOR 2SA1162-G	
Q005	8-729-216-22	TRANSISTOR 2SA1162-G	
Q006	8-729-120-28	TRANSISTOR 2SC1623-L5L6	
Q007	8-729-120-28	TRANSISTOR 2SC1623-L5L6	
Q501	8-729-120-28	TRANSISTOR 2SC1623-L5L6	
Q502	8-729-120-28	TRANSISTOR 2SC1623-L5L6	
Q503	8-729-901-97	TRANSISTOR 2SA1036K-Q	
Q504	8-729-120-28	TRANSISTOR 2SC1623-L5L6	
Q505	8-729-901-97	TRANSISTOR 2SA1036K-Q	
Q506	8-729-820-73	TRANSISTOR 2SC3746	
Q507	8-729-035-54	TRANSISTOR 2SJ449	
Q508	8-729-031-87	TRANSISTOR 2SC5047-CA	
Q509	8-729-033-25	TRANSISTOR DTC114GKA	
Q510	8-729-120-28	TRANSISTOR 2SC1623-L5L6	
Q511	8-729-140-50	TRANSISTOR 2SC3209LK	
Q512	8-729-120-28	TRANSISTOR 2SC1623-L5L6	
Q513	8-729-901-00	TRANSISTOR DTC124EK	
Q517	8-729-216-22	TRANSISTOR 2SA1162-G	
Q522	8-729-042-43	TRANSISTOR 2SK2098-01MR	
Q523	8-729-042-43	TRANSISTOR 2SK2098-01MR	
Q524	8-729-042-43	TRANSISTOR 2SK2098-01MR	
Q525	8-729-042-43	TRANSISTOR 2SK2098-01MR	
Q526	8-729-042-43	TRANSISTOR 2SK2098-01MR	
Q527	8-729-042-43	TRANSISTOR 2SK2098-01MR	
Q528	8-729-042-43	TRANSISTOR 2SK2098-01MR	
Q660	8-729-033-26	TRANSISTOR DTA114GKAT146	
Q661	8-729-033-25	TRANSISTOR DTC114GKA	
Q701	8-729-800-32	TRANSISTOR 2SC2362K-G	
Q703	8-729-178-43	TRANSISTOR 2SC2784-E	
Q704	8-729-207-82	TRANSISTOR 2SC3421-Y	
Q705	8-729-204-91	TRANSISTOR 2SA1049-GR	
Q706	8-729-207-89	TRANSISTOR 2SA1358-Y	
Q707	8-729-216-22	TRANSISTOR 2SA1162-G	
Q708	8-729-020-07	TRANSISTOR 2SC4686A(LBSONY)	
Q901	8-729-120-28	TRANSISTOR 2SC1623-L5L6	
Q902	8-729-216-22	TRANSISTOR 2SA1162-G	
Q904	8-729-901-87	TRANSISTOR 2SC2411K-CQ	
Q905	8-729-901-97	TRANSISTOR 2SA1036K-Q	
Q908	8-729-035-54	TRANSISTOR 2SJ449	
Q909	8-729-033-91	TRANSISTOR 2SK1120LBSONY2	
		<RESISTOR>	
R001	1-216-025-91	RES, CHIP 100	
R002	1-216-049-91	RES, CHIP 1.0K	
R003	1-216-049-91	RES, CHIP 1.0K	
R004	1-216-049-91	RES, CHIP 1.0K	
R005	1-216-073-00	RES, CHIP 10K	
R006	1-216-049-91	RES, CHIP 1.0K	
R007	1-216-025-91	RES, CHIP 100	
R008	1-216-089-91	RES, CHIP 47K	
R009	1-216-025-91	RES, CHIP 100	
R010	1-216-081-00	RES, CHIP 22K	
R011	1-216-097-91	RES, CHIP 100K	
R012	1-216-025-91	RES, CHIP 100	
R013	1-216-675-11	METAL CHIP 10K	0.50%1/10W
R016	1-216-687-11	METAL CHIP 33K	0.50%1/10W
R017	1-216-049-91	RES, CHIP 1.0K	
R018	1-216-049-91	RES, CHIP 1.0K	
R019	1-216-683-11	METAL CHIP 22K	0.50%1/10W
R020	1-216-049-91	RES, CHIP 1.0K	
R023	1-216-025-91	RES, CHIP 100	
R024	1-216-089-91	RES, CHIP 47K	
R026	1-216-073-00	RES, CHIP 10K	

D

REF.NO.	PART NO.	DESCRIPTION		REMARK
R027	1-216-073-00	RES, CHIP	10K	
R028	1-216-065-00	RES, CHIP	4.7K	
R029	1-216-089-91	RES, CHIP	47K	
R030	1-216-017-91	RES, CHIP	47	
R031	1-216-073-00	RES, CHIP	10K	
R032	1-216-675-11	METAL CHIP	10K	0.50%1/10W
R033	1-216-017-91	RES, CHIP	47	
R034	1-216-025-91	RES, CHIP	100	
R035	1-216-049-91	RES, CHIP	1.0K	
R036	1-216-025-91	RES, CHIP	100	
R037	1-216-061-00	RES, CHIP	3.3K	
R038	1-216-065-00	RES, CHIP	4.7K	
R039	1-216-049-91	RES, CHIP	1.0K	
R040	1-216-049-91	RES, CHIP	1.0K	
R041	1-216-065-00	RES, CHIP	4.7K	
R042	1-216-089-91	RES, CHIP	47K	
R043	1-216-065-00	RES, CHIP	4.7K	
R044	1-216-095-00	RES, CHIP	82K	
R045	1-216-073-00	RES, CHIP	10K	
R046	1-216-675-11	METAL CHIP	10K	0.50%1/10W
R047	1-216-073-00	RES, CHIP	10K	
R048	1-216-049-91	RES, CHIP	1.0K	
R049	1-216-049-91	RES, CHIP	1.0K	
R050	1-216-025-91	RES, CHIP	100	
R051	1-216-679-11	METAL CHIP	15K	0.50%1/10W
R052	1-216-073-00	RES, CHIP	10K	
R053	1-216-675-11	METAL CHIP	10K	0.50%1/10W
R054	1-216-675-11	METAL CHIP	10K	0.50%1/10W
R055	1-216-089-91	RES, CHIP	47K	
R056	1-216-671-11	METAL CHIP	6.8K	0.50%1/10W
R057	1-216-679-11	METAL CHIP	15K	0.50%1/10W
R058	1-216-663-11	METAL CHIP	3.3K	0.50%1/10W
R059	1-216-065-00	RES, CHIP	4.7K	
R060	1-216-049-91	RES, CHIP	1.0K	
R061	1-216-065-00	RES, CHIP	4.7K	
R063	1-216-025-91	RES, CHIP	100	
R064	1-216-025-91	RES, CHIP	100	
R065	1-216-025-91	RES, CHIP	100	
R066	1-216-025-91	RES, CHIP	100	
R067	1-216-025-91	RES, CHIP	100	
R068	1-216-025-91	RES, CHIP	100	
R069	1-216-017-91	RES, CHIP	47	
R070	1-216-675-11	METAL CHIP	10K	0.50%1/10W
R071	1-216-049-91	RES, CHIP	1.0K	
R072	1-216-651-11	METAL CHIP	1K	0.50%1/10W
R073	1-216-295-91	SHORT	0	
R074	1-216-675-11	METAL CHIP	10K	0.50%1/10W
R075	1-216-049-91	RES, CHIP	1.0K	
R076	1-216-049-91	RES, CHIP	1.0K	
R077	1-216-049-91	RES, CHIP	1.0K	
R078	1-216-049-91	RES, CHIP	1.0K	
R079	1-216-017-91	RES, CHIP	47	
R080	1-216-017-91	RES, CHIP	47	
R081	1-216-675-11	METAL CHIP	10K	0.50%1/10W
R082	1-216-049-91	RES, CHIP	1.0K	
R083	1-216-057-00	RES, CHIP	2.2K	
R084	1-216-025-91	RES, CHIP	100	
R085	1-216-025-91	RES, CHIP	100	
R088	1-216-057-00	RES, CHIP	2.2K	
R089	1-216-057-00	RES, CHIP	2.2K	
R090	1-216-057-00	RES, CHIP	2.2K	
R092	1-216-057-00	RES, CHIP	2.2K	
R094	1-216-057-00	RES, CHIP	2.2K	
R096	1-216-295-91	SHORT	0	
R097	1-216-057-00	RES, CHIP	2.2K	
R101	1-216-049-91	RES, CHIP	1.0K	
R501	1-216-065-00	RES, CHIP	4.7K	
R502	1-216-057-00	RES, CHIP	2.2K	
R503	1-216-041-00	RES, CHIP	470	
R504	1-216-057-00	RES, CHIP	2.2K	
R505	1-216-041-00	RES, CHIP	470	
R506	1-249-397-11	CARBON	22	5% 1/4W F
R507	1-216-065-00	RES, CHIP	4.7K	
R508	1-216-025-91	RES, CHIP	100	
R509	1-216-057-00	RES, CHIP	2.2K	
R510	1-216-065-00	RES, CHIP	4.7K	
R511	1-219-726-11	METAL	2.2	5% 10W
R512	1-216-627-11	METAL CHIP	100	0.50%1/10W
R513	1-215-860-11	METAL OXIDE	33	5% 1W F
R514	1-211-796-11	FUSIBLE	1	5% 1/2W F
R515	1-216-675-11	METAL CHIP	10K	0.50%1/10W
R516	1-247-815-91	CARBON	220	5% 1/4W
R517	1-216-065-00	RES, CHIP	4.7K	
R518	1-216-097-91	RES, CHIP	100K	
R519	1-216-393-00	METAL OXIDE	2.2	5% 3W F
R520	1-216-393-00	METAL OXIDE	2.2	5% 3W F
R521	1-249-413-11	CARBON	470	5% 1/4W F
R522	1-216-423-11	METAL OXIDE	27	5% 1W F
R523	1-249-425-11	CARBON	4.7K	5% 1/4W F
R524	1-215-869-11	METAL OXIDE	1K	5% 1W F
R525	1-216-681-11	METAL CHIP	18K	0.50%1/10W
R526	1-214-840-00	METAL	100	1% 1/2W
R527	1-214-840-00	METAL	100	1% 1/2W
R528	1-214-840-00	METAL	100	1% 1/2W
R529	1-260-313-51	CARBON	56	5% 1/2W
R530	1-249-437-11	CARBON	47K	5% 1/4W
R531	1-249-437-11	CARBON	47K	5% 1/4W
R532	1-249-437-11	CARBON	47K	5% 1/4W
R533	1-249-437-11	CARBON	47K	5% 1/4W
R534	1-249-437-11	CARBON	47K	5% 1/4W
R535	1-216-049-91	RES, CHIP	1.0K	
R536	1-216-049-91	RES, CHIP	1.0K	
R537	1-216-049-91	RES, CHIP	1.0K	
R538	1-216-049-91	RES, CHIP	1.0K	
R539	1-216-049-91	RES, CHIP	1.0K	
R540	1-216-073-00	RES, CHIP	10K	
R541	1-260-314-11	CARBON	68	5% 1/2W
R542	1-215-863-11	METAL OXIDE	100	5% 1W F
R543	1-216-640-11	METAL CHIP	360	0.50%1/10W
R544	1-260-085-11	CARBON	68	5% 1/2W

D

REF.NO.	PART NO.	DESCRIPTION		REMARK
R545	1-216-683-11	METAL CHIP	22K	0.50%1/10W
R546	1-260-288-11	CARBON	0.47	5% 1/2W
R547	1-216-663-11	METAL CHIP	3.3K	0.50%1/10W
R548	1-215-443-00	METAL	8.2K	1% 1/4W
R549	1-216-675-11	METAL CHIP	10K	0.50%1/10W
R550	1-260-288-11	CARBON	0.47	5% 1/2W
R551	1-216-659-11	METAL CHIP	2.2K	0.50%1/10W
R552	1-216-057-00	RES, CHIP	2.2K	
R553	1-216-655-11	METAL CHIP	1.5K	0.50%1/10W
R554	1-216-675-11	METAL CHIP	10K	0.50%1/10W
R555	1-216-065-00	RES, CHIP	4.7K	
R556	1-216-674-11	METAL CHIP	9.1K	0.50%1/10W
R557	1-218-760-11	METAL CHIP	220K	0.50%1/10W
R558	1-216-683-11	METAL CHIP	22K	0.50%1/10W
R561	1-216-683-11	METAL CHIP	22K	0.50%1/10W
R562	1-249-401-11	CARBON	47	5% 1/4W F
R563	1-216-662-11	METAL CHIP	3K	0.50%1/10W
R564	1-216-697-91	METAL CHIP	82K	0.50%1/10W
R565	1-216-671-11	METAL CHIP	6.8K	0.50%1/10W
R566	1-260-311-11	CARBON	39	5% 1/2W
R567	1-216-627-11	METAL CHIP	100	0.50%1/10W
R568	1-216-655-11	METAL CHIP	1.5K	0.50%1/10W
R571	1-216-381-11	METAL OXIDE	0.22	5% 3W F
R572	1-216-097-91	RES, CHIP	100K	
R573	1-216-097-91	RES, CHIP	100K	
R574	1-216-097-91	RES, CHIP	100K	
R575	1-216-097-91	RES, CHIP	100K	
R576	1-216-097-91	RES, CHIP	100K	
R577	1-216-057-00	RES, CHIP	2.2K	
R578	1-216-025-91	RES, CHIP	100	
R579	1-216-672-11	METAL CHIP	7.5K	0.50%1/10W
R580	1-216-073-00	RES, CHIP	10K	
R581	1-216-073-00	RES, CHIP	10K	
R582	1-216-073-00	RES, CHIP	10K	
R583	1-216-677-11	METAL CHIP	12K	0.50%1/10W
R584	1-216-081-00	RES, CHIP	22K	
R585	1-216-081-00	RES, CHIP	22K	
R586	1-216-049-91	RES, CHIP	1.0K	
R587	1-216-049-91	RES, CHIP	1.0K	
R588	1-216-097-91	RES, CHIP	100K	
R589	1-216-097-91	RES, CHIP	100K	
R590	1-216-675-11	METAL CHIP	10K	0.50%1/10W
R591	1-216-675-11	METAL CHIP	10K	0.50%1/10W
R594	1-249-437-11	CARBON	47K	5% 1/4W
R595	1-249-437-11	CARBON	47K	5% 1/4W
R596	1-216-683-11	METAL CHIP	22K	0.50%1/10W
R663	1-215-482-00	METAL	360K	1% 1/4W
R664	1-215-459-00	METAL	39K	1% 1/4W
R665	1-216-049-91	RES, CHIP	1.0K	
R667	1-216-041-00	RES, CHIP	470	
R669	1-216-671-11	METAL CHIP	6.8K	0.50%1/10W
R701	1-249-383-11	CARBON	1.5	5% 1/4W F
R702	1-216-057-00	RES, CHIP	2.2K	
R703	1-216-085-00	RES, CHIP	33K	
R704	1-249-383-11	CARBON	1.5	5% 1/4W F
R705	1-249-385-11	CARBON	2.2	5% 1/4W
R706	1-216-093-00	RES, CHIP	68K	
R707	1-249-421-11	CARBON	2.2K	5% 1/4W
R708	1-216-073-00	RES, CHIP	10K	
R709	1-216-473-11	METAL OXIDE	56	5% 3W F
R710	1-216-073-00	RES, CHIP	10K	
R715	1-216-077-00	RES, CHIP	15K	
R719	1-249-383-11	CARBON	1.5	5% 1/4W F
R720	1-260-292-11	CARBON	1	5% 1/2W
R721	1-216-667-11	METAL CHIP	4.7K	0.50%1/10W
R722	1-216-691-11	METAL CHIP	47K	0.50%1/10W
R723	1-216-663-11	METAL CHIP	3.3K	0.50%1/10W
R724	1-214-798-21	METAL	1.8	1% 1/2W
R725	1-214-798-21	METAL	1.8	1% 1/2W
R726	1-216-675-11	METAL CHIP	10K	0.50%1/10W
R727	1-260-292-11	CARBON	1	5% 1/2W
R728	1-249-381-11	CARBON	1	5% 1/4W F
R729	1-215-865-11	METAL OXIDE	220	5% 1W F
R730	1-219-746-11	CARBON	1K	5% 1/2W
R731	1-216-073-00	RES, CHIP	10K	
R732	1-216-073-00	RES, CHIP	10K	
R733	1-219-746-11	CARBON	1K	5% 1/2W
R734	1-215-881-11	METAL OXIDE	15	5% 2W F
R737	1-249-377-11	CARBON	0.47	5% 1/4W F
R738	1-249-377-11	CARBON	0.47	5% 1/4W F
R739	1-249-413-11	CARBON	470	5% 1/4W F
R741	1-249-430-11	CARBON	12K	5% 1/4W
R742	1-249-419-11	CARBON	1.5K	5% 1/4W
R743	1-216-049-91	RES, CHIP	1.0K	
R748	1-216-683-11	METAL CHIP	22K	0.50%1/10W
R749	1-216-025-91	RES, CHIP	100	
R750	1-216-057-00	RES, CHIP	2.2K	
R751	1-216-065-00	RES, CHIP	4.7K	
R752	1-216-083-00	RES, CHIP	27K	
R753	1-219-720-11	METAL	10M	5% 1W
R754	1-219-754-11	CARBON	680K	5% 1/2W
R755	1-219-754-11	CARBON	680K	5% 1/2W
R756	1-220-824-91	CARBON	270K	5% 1/2W
R759	1-218-754-11	METAL CHIP	120K	0.50%1/10W
R776	1-216-049-91	RES, CHIP	1.0K	
R777	1-216-681-11	METAL CHIP	18K	0.50%1/10W
R778	1-216-667-11	METAL CHIP	4.7K	0.50%1/10W
R779	1-216-049-91	RES, CHIP	1.0K	
R784	1-216-081-00	RES, CHIP	22K	
R900	1-216-399-00	METAL OXIDE	6.8	5% 3W F
R901	1-216-057-00	RES, CHIP	2.2K	
R902	1-216-065-00	RES, CHIP	4.7K	
R903	1-216-073-00	RES, CHIP	10K	
R904	1-216-057-00	RES, CHIP	2.2K	
R905	1-216-025-91	RES, CHIP	100	
R906	1-216-065-00	RES, CHIP	4.7K	
R907	1-216-025-91	RES, CHIP	100	
R908	1-216-091-00	RES, CHIP	56K	
R909	1-216-689-11	RES, CHIP	39K	
R910	1-216-073-00	RES, CHIP	10K	

D H

The components identified by shading and mark ⚠ are critical for safety. Replace only with part number specified.

Les composants identifiés per un tramé et une marque ⚠ sont critiques pour la sécurité. Ne les remplacer que par une piéce portant le numéro spécifié.

REF.NO.	PART NO.	DESCRIPTION	REMARK
R911	1-216-049-91	RES, CHIP 1.0K	
R912	1-218-772-11	METAL CHIP 680K 0.50%1/10W	
R913	1-219-748-11	CARBON 4.7K 5% 1/2W	
R914	1-219-510-11	CARBON 470K 5% 1/2W	
R915	1-249-437-11	CARBON 47K 5% 1/4W	
R916	1-249-429-11	CARBON 10K 5% 1/4W	
R917	1-216-073-00	RES, CHIP 10K	
R918	1-216-097-91	RES, CHIP 100K	
R919	1-216-025-91	RES, CHIP 100	
R920	1-249-401-11	CARBON 47 5% 1/4W	F
R921	1-216-668-11	METAL CHIP 5.1K 0.50%1/10W	
R922	1-216-041-00	RES, CHIP 470	
R923	1-216-675-11	METAL CHIP 10K 0.50%1/10W	
R924	1-249-397-11	CARBON 22 5% 1/4W	F
R925	1-216-653-11	METAL CHIP 1.2K 0.50%1/10W	
R926	1-216-653-11	METAL CHIP 1.2K 0.50%1/10W	
R927	1-216-073-00	RES, CHIP 10K	
R928	1-216-667-11	METAL CHIP 4.7K 0.50%1/10W	
R929	1-216-033-00	RES, CHIP 220	
R930	1-216-033-00	RES, CHIP 220	
R933	1-216-683-11	METAL CHIP 22K 0.50%1/10W	
R934	1-216-667-11	METAL CHIP 4.7K 0.50%1/10W	
R937	1-219-727-11	METAL 68 5% 10W	
R940	1-249-393-11	CARBON 10 5% 1/4W	F
R980	1-216-049-91	RES, CHIP 1.0K	
R981	1-216-025-91	RES, CHIP 100	
R1001	1-216-073-00	RES, CHIP 10K	
R1003	1-216-049-91	RES, CHIP 1.0K	
R1004	1-216-049-91	RES, CHIP 1.0K	
R1005	1-216-049-91	RES, CHIP 1.0K	
R1006	1-216-049-91	RES, CHIP 1.0K	
R1007	1-216-049-91	RES, CHIP 1.0K	
R1011	1-216-073-00	RES, CHIP 10K	
R1012	1-216-049-91	RES, CHIP 1.0K	
R1013	1-216-049-91	RES, CHIP 1.0K	
R1014	1-216-049-91	RES, CHIP 1.0K	
R1015	1-216-295-91	SHORT 0	
R1016	1-216-049-91	RES, CHIP 1.0K	
R1017	1-216-065-00	RES, CHIP 4.7K	
R1020	1-216-049-91	RES, CHIP 1.0K	
R1021	1-216-049-91	RES, CHIP 1.0K	
R1022	1-216-295-91	SHORT 0	
R1023	1-216-295-91	SHORT 0	
R1024	1-216-295-91	SHORT 0	
R1025	1-249-389-11	CARBON 4.7 5% 1/4W	F
R1026	1-249-389-11	CARBON 4.7 5% 1/4W	F
R1027	1-216-065-00	RES, CHIP 4.7K	
R1028	1-216-049-91	RES, CHIP 1.0K	
R1501	1-216-057-00	RES, CHIP 2.2K	
R1502	1-216-073-00	RES, CHIP 10K	
R1503	1-216-125-00	RES, CHIP 1.5M	
R1504	1-216-097-91	RES, CHIP 100K	
R1513	1-216-049-91	RES, CHIP 1.0K	
R1514	1-216-049-91	RES, CHIP 1.0K	

REF.NO.	PART NO.	DESCRIPTION	REMARK
		<RELAY>	
RY501	1-755-137-11	RELAY	
		<SPARK GAP>	
SG701	1-519-422-11	GAP, SPARK	
SG702	1-519-422-11	GAP, SPARK	
SG901	1-517-499-21	GAP, SPARK	
		<TRANSFORMER>	
T501	1-429-303-21	TRANSFORMER, FERRITE (HDT)	
T502	1-416-401-11	COIL, CHOKE 5MMH	
T503	1-431-413-11	TRANSFORMER, FERRITE (HST)	
T504	1-416-257-11	COIL, CHOKE (HCC) 2.0MH	
T701	1-431-414-11	TRANSFORMER, FERRITE (DFT)	
T901	1-416-402-11	COIL, CHOKE 500UH	
T902 ⚠	X-4035-170-1	TRANSFORMER ASSY, FLYBACK (NX-4142//J1D4)	
		<THERMISTOR>	
TH501	1-807-796-11	THERMISTOR	
TH502	1-807-796-11	THERMISTOR	
		<CRYSTAL>	
X001	1-567-781-61	VIBRATOR, CRYSTAL	

****

* 8-933-283-00 H BOARD, COMPLETE

****

REF.NO.	PART NO.	DESCRIPTION	REMARK
		<CAPACITOR>	
C805	1-124-589-11	ELECT 47MF 20% 16V	
C811	1-124-589-11	ELECT 47MF 20% 16V	
		<CONNECTOR>	
CN801*	1-564-526-11	PLUG, CONNECTOR 11P	
		<DIODE>	
D820	8-719-064-11	DIODE SPR-325MVW	
		<TRANSISTOR>	
Q801	8-729-119-78	TRANSISTOR 2SC2785-HFE	
Q802	8-729-119-78	TRANSISTOR 2SC2785-HFE	

Les composants identifiés per un tramé et une marque ⚠ sont critiques pour la sécurité. Ne les remplacer que par une piéce portant le numéro spécifié.

The components identified by shading and mark ⚠ are critical for safety. Replace only with part number specified.

REF.NO.	PART NO.	DESCRIPTION			REMARK
	<RESISTOR>				
R801	1-215-433-00	METAL	3.3K	1%	1/4W
R802	1-215-409-00	METAL	330	1%	1/4W
R803	1-215-409-00	METAL	330	1%	1/4W
R804	1-215-413-00	METAL	470	1%	1/4W
R805	1-215-413-00	METAL	470	1%	1/4W
R806	1-215-417-00	METAL	680	1%	1/4W
R807	1-215-421-00	METAL	1K	1%	1/4W
R808	1-215-421-00	METAL	1K	1%	1/4W
R809	1-215-429-00	METAL	2.2K	1%	1/4W
R810	1-215-433-00	METAL	3.3K	1%	1/4W
R814	1-249-429-11	CARBON	10K	5%	1/4W
R815	1-249-429-11	CARBON	10K	5%	1/4W
R818	1-215-445-00	METAL	10K	1%	1/4W
R819	1-249-441-11	CARBON	100K	5%	1/4W
R826	1-249-408-11	CARBON	180	5%	1/4W
R827	1-249-407-11	CARBON	150	5%	1/4W
	<SWITCH>				
S802	1-692-431-21	SWITCH, TACTILE (CONT+)			
S803	1-692-431-21	SWITCH, TACTILE (CONT-)			
S804	1-692-431-21	SWITCH, TACTILE (MENU)			
S805	1-692-431-21	SWITCH, TACTILE (BRT+)			
S806	1-692-431-21	SWITCH, TACTILE (BRT-)			
S818	1-692-431-21	SWITCH, TACTILE (ASC)			
S820	1-692-431-21	SWITCH, TACTILE (RESET)			
	<THERMISTOR>				
TH801	1-807-796-11	THERMISTOR			

****

* 8-933-279-00 J BOARD, COMPLETE
****

REF.NO.	PART NO.	DESCRIPTION			REMARK
	<CONNECTOR>				
CN891*	1-691-961-11	PIN, CONNECTOR (PC BOARD) 2P			
	<SWITCH>				
S891 ⚠	1-571-433-31	SWITCH, PUSH (AC POWER)			

****

* 8-933-263-00 L BOARD, COMPLETE
****

REF.NO.	PART NO.	DESCRIPTION			REMARK
	<CAPACITOR>				
C5002	1-126-964-11	ELECT	10MF	20%	50V
C5003	1-126-933-11	ELECT	100MF	20%	16V
C5004	1-104-664-11	ELECT	47MF	20%	25V
C5005	1-104-664-11	ELECT	47MF	20%	25V
C5008	1-104-664-11	ELECT	47MF	20%	25V
C5009	1-164-004-11	CERAMIC CHIP	0.1MF	10%	25V
C5101	1-164-004-11	CERAMIC CHIP	0.1MF	10%	25V
C5103	1-164-004-11	CERAMIC CHIP	0.1MF	10%	25V
C5104	1-164-004-11	CERAMIC CHIP	0.1MF	10%	25V
C5105	1-104-664-11	ELECT	47MF	20%	25V
C5106	1-164-004-11	CERAMIC CHIP	0.1MF	10%	25V
C5107	1-137-399-11	FILM	0.1MF	5%	50V
C5108	1-164-004-11	CERAMIC CHIP	0.1MF	10%	25V
C5109	1-164-004-11	CERAMIC CHIP	0.1MF	10%	25V
C5110	1-104-664-11	ELECT	47MF	20%	25V
C5111	1-137-399-11	FILM	0.1MF	5%	50V
C5201	1-104-664-11	ELECT	47MF	20%	25V
C5202	1-104-664-11	ELECT	47MF	20%	25V
C5203	1-164-004-11	CERAMIC CHIP	0.1MF	10%	25V
C5204	1-137-399-11	FILM	0.1MF	5%	50V
C5205	1-164-489-11	CERAMIC CHIP	0.22MF	10%	16V
C5206	1-164-004-11	CERAMIC CHIP	0.1MF	10%	25V
C5301	1-164-004-11	CERAMIC CHIP	0.1MF	10%	25V
C5303	1-164-004-11	CERAMIC CHIP	0.1MF	10%	25V
C5304	1-164-004-11	CERAMIC CHIP	0.1MF	10%	25V
C5305	1-104-664-11	ELECT	47MF	20%	25V
C5306	1-164-004-11	CERAMIC CHIP	0.1MF	10%	25V
C5307	1-137-399-11	FILM	0.1MF	5%	50V
C5308	1-164-004-11	CERAMIC CHIP	0.1MF	10%	25V
C5309	1-164-004-11	CERAMIC CHIP	0.1MF	10%	25V
C5310	1-104-664-11	ELECT	47MF	20%	25V
C5311	1-137-399-11	FILM	0.1MF	5%	50V
C5401	1-164-004-11	CERAMIC CHIP	0.1MF	10%	25V
C5403	1-164-232-11	CERAMIC CHIP	0.01MF	10%	50V
C5404	1-164-004-11	CERAMIC CHIP	0.1MF	10%	25V
C5405	1-104-664-11	ELECT	47MF	20%	25V
C5406	1-164-004-11	CERAMIC CHIP	0.1MF	10%	25V
C5407	1-137-399-11	FILM	0.1MF	5%	50V
C5408	1-163-003-11	CERAMIC CHIP	330PF	10%	50V
C5409	1-164-004-11	CERAMIC CHIP	0.1MF	10%	25V
C5410	1-104-664-11	ELECT	47MF	20%	25V
C5412	1-164-004-11	CERAMIC CHIP	0.1MF	10%	25V
C5501	1-126-923-11	ELECT	220MF	20%	10V
	<CONNECTOR>				
CN5001*	1-564-512-11	PLUG, CONNECTOR 9P			
CN5002*	1-564-509-11	PLUG, CONNECTOR 6P			
CN5003	1-564-513-11	PLUG, CONNECTOR 10P			
CN5004*	1-564-507-11	PLUG, CONNECTOR 4P			
	<DIODE>				
D5002	8-719-801-78	DIODE 1SS184			
D5101	8-719-800-76	DIODE 1SS226			
D5103	8-719-800-76	DIODE 1SS226			
D5201	8-719-800-76	DIODE 1SS226			
D5301	8-719-800-76	DIODE 1SS226			

L

REF.NO.	PART NO.	DESCRIPTION				REMARK
D5303	8-719-800-76	DIODE 1SS226				
D5401	8-719-800-76	DIODE 1SS226				
D5403	8-719-800-76	DIODE 1SS226				
D5501	8-719-976-96	ZENER DIODE DTZ4.7C				
	<SENSOR>					
GS5001*	1-475-351-11	SENSOR UNIT, MAGNETIC				
	<IC>					
IC5101	8-759-822-38	IC LA6510				
IC5201	8-759-803-42	IC LA6500-FA				
IC5301	8-759-822-38	IC LA6510				
IC5401	8-759-822-38	IC LA6510				
	<RESISTOR>					
R5001	1-249-383-11	CARBON	1.5	5%	1/4W	F
R5003	1-216-295-91	SHORT	0			
R5005	1-216-689-11	RES, CHIP	39K			
R5006	1-216-073-00	RES, CHIP	10K			
R5007	1-216-049-91	RES, CHIP	1.0K			
R5008	1-216-295-91	SHORT	0			
R5009	1-216-295-91	SHORT	0			
R5010	1-216-295-91	SHORT	0			
R5011	1-216-073-00	RES, CHIP	10K			
R5012	1-216-295-91	SHORT	0			
R5013	1-216-295-91	SHORT	0			
R5015	1-216-049-91	RES, CHIP	1.0K			
R5101	1-249-383-11	CARBON	1.5	5%	1/4W	F
R5102	1-249-383-11	CARBON	1.5	5%	1/4W	F
R5108	1-216-308-00	RES, CHIP	4.7			
R5109	1-216-308-00	RES, CHIP	4.7			
R5110	1-216-073-00	RES, CHIP	10K			
R5111	1-216-308-00	RES, CHIP	4.7			
R5112	1-249-383-11	CARBON	1.5	5%	1/4W	F
R5113	1-216-073-00	RES, CHIP	10K			
R5114	1-249-441-11	CARBON	100K	5%	1/4W	F
R5115	1-215-882-00	METAL OXIDE	22	5%	2W	F
R5116	1-216-073-00	RES, CHIP	10K			
R5117	1-216-308-00	RES, CHIP	4.7			
R5119	1-216-073-00	RES, CHIP	10K			
R5120	1-249-383-11	CARBON	1.5	5%	1/4W	F
R5121	1-249-441-11	CARBON	100K	5%	1/4W	F
R5122	1-215-882-00	METAL OXIDE	22	5%	2W	F
R5201	1-249-383-11	CARBON	1.5	5%	1/4W	F
R5202	1-249-383-11	CARBON	1.5	5%	1/4W	F
R5203	1-249-383-11	CARBON	1.5	5%	1/4W	F
R5204	1-249-441-11	CARBON	100K	5%	1/4W	F
R5205	1-216-073-00	RES, CHIP	10K			
R5206	1-215-859-00	METAL OXIDE	22	5%	1W	F
R5207	1-216-073-00	RES, CHIP	10K			
R5208	1-216-670-11	METAL CHIP	6.2K	0.50%	1/10W	
R5301	1-249-383-11	CARBON	1.5	5%	1/4W	F
R5302	1-249-383-11	CARBON	1.5	5%	1/4W	F
R5308	1-216-308-00	RES, CHIP	4.7			
R5309	1-216-308-00	RES, CHIP	4.7			
R5310	1-216-073-00	RES, CHIP	10K			
R5311	1-216-308-00	RES, CHIP	4.7			
R5312	1-249-383-11	CARBON	1.5	5%	1/4W	F
R5313	1-216-073-00	RES, CHIP	10K			
R5314	1-249-441-11	CARBON	100K	5%	1/4W	F
R5315	1-215-882-00	METAL OXIDE	22	5%	2W	F
R5316	1-216-073-00	RES, CHIP	10K			
R5317	1-216-308-00	RES, CHIP	4.7			
R5319	1-216-073-00	RES, CHIP	10K			
R5320	1-249-383-11	CARBON	1.5	5%	1/4W	F
R5321	1-249-441-11	CARBON	100K	5%	1/4W	F
R5322	1-215-882-00	METAL OXIDE	22	5%	2W	F
R5401	1-249-383-11	CARBON	1.5	5%	1/4W	F
R5402	1-249-383-11	CARBON	1.5	5%	1/4W	F
R5406	1-216-689-11	RES, CHIP	39K			
R5407	1-216-079-00	RES, CHIP	18K			
R5408	1-216-308-00	RES, CHIP	4.7			
R5409	1-216-308-00	RES, CHIP	4.7			
R5410	1-216-089-91	RES, CHIP	47K			
R5411	1-216-308-00	RES, CHIP	4.7			
R5412	1-249-383-11	CARBON	1.5	5%	1/4W	F
R5413	1-216-097-91	RES, CHIP	100K			
R5414	1-249-441-11	CARBON	100K	5%	1/4W	F
R5415	1-215-886-11	METAL OXIDE	100	5%	2W	F
R5416	1-216-077-00	RES, CHIP	15K			
R5417	1-216-308-00	RES, CHIP	4.7			
R5419	1-216-089-91	RES, CHIP	47K			
R5420	1-249-383-11	CARBON	1.5	5%	1/4W	F
R5421	1-249-441-11	CARBON	100K	5%	1/4W	F
R5422	1-215-885-00	METAL OXIDE	68	5%	2W	F
R5423	1-216-105-91	RES, CHIP	220K			
R5501	1-216-057-00	RES, CHIP	2.2K			
R5502	1-216-681-11	METAL CHIP	18K	0.50%	1/10W	
R5503	1-216-681-11	METAL CHIP	18K	0.50%	1/10W	
R5504	1-216-093-00	RES, CHIP	68K			
R5505	1-216-067-00	RES, CHIP	5.6K			
R5506	1-216-670-11	METAL CHIP	6.2K	0.50%	1/10W	