OPERATION AND SERVICE MANUAL

8559A
SPECTRUM ANALYZER
.01 - 21 GHz

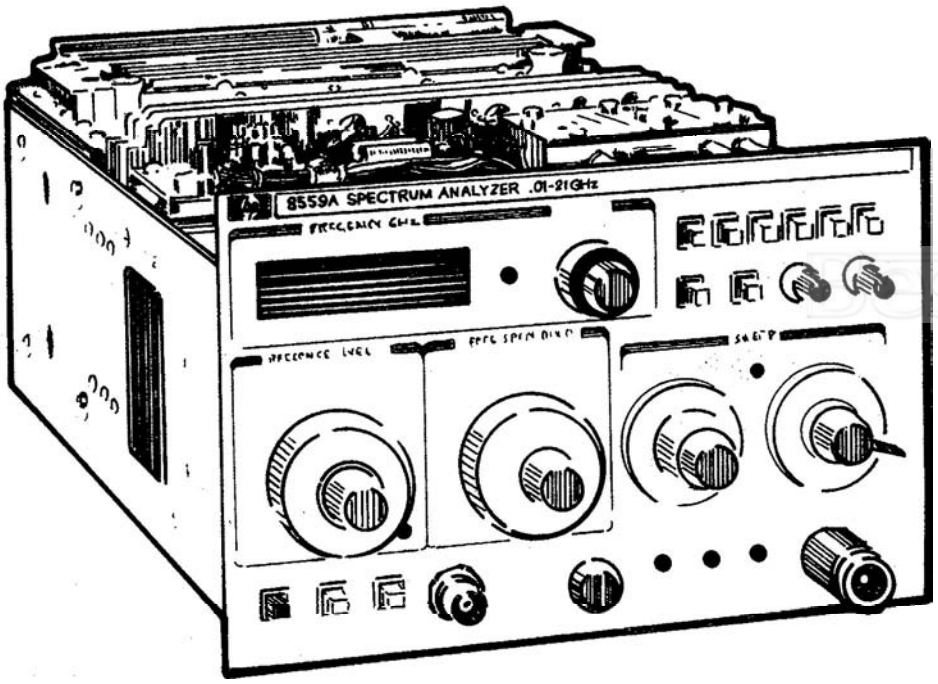

HEWLETT PACKARD

CERTIFICATION

Hewlett-Packard Company certifies that this product met its published specifications at the time of shipment from the factory. Hewlett-Packard further certifies that its calibration measurements are traceable to the United States National Bureau of Standards, to the extent allowed by the Bureau's calibration facility. and to the calibration facilities of other International Standards Organization members.

WARRANTY

This Hewlett-Packard instrument product is warranted against defects in material and workmanship for a period of one year from date of shipment. During the warranty period, Hewlett-Packard Company will, at its option, either repair or replace products which prove to be defective.

For warranty service or repair, this product must be returned to a service facility designated by HP. Buyer shall prepay shipping charges to HP and HP shall pay shipping charges to return the product to Buyer. However, Buyer shall pay all shipping charges, duties, and taxes for products returned to HP from another country.

HP warrants that its software and firmware designated by HP for use with an instrument will execute its programming instructions when properly installed on that instrument. HP does not warrant that the operation of the instrument, or software, or firmware will be uninterrupted or error free.

LIMITATION OF WARRANTY

The foregoing warranty shall not apply to defects resulting from improper or inadequate maintenance by Buyer, Buyer-supplied software or interfacing, unauthorized modification or misuse, operation outside of the environmental specifications for the product, or improper site preparation or maintenance.

NO OTHER WARRANTY IS EXPRESSED OR IMPLIED. HP SPECIFICALLY DISCLAIMS THE IMPLIED WARRANTIES OF MERCHANTABILITY AND FITNESS FOR A PARTICULAR PURPOSE.

EXCLUSIVE REMEDIES

THE REMEDIES PROVIDED HEREIN ARE BUYER'S SOLE AND EXCLUSIVE REMEDIES. HP SHALL NOT BE LIABLE FOR ANY DIRECT, INDIRECT, SPECIAL, INCIDENTAL, OR CONSEQUENTIAL DAMAGES, WHETHER BASED ON CONTRACT, TORT, OR ANY OTHER LEGAL THEORY.

ASSISTANCE

Product maintenance agreements and other customer assistance agreements are available for Hewlett-Packard products.

For any assistance, contact your nearest Hewlett-Packard Sales and Service Office. Addresses are provided at the back of this manual.

HEWLETT PACKARD

OPERATION AND SERVICE MANUAL

8559A
SPECTRUM ANALYZER
0.1 – 21 GHz

SERIAL NUMBERS

This manual applies directly to instruments with serial numbers prefixed 2347A.

With modifications described in Section VII, this manual also applies to instruments with serial number prefixes 1909A through 2320A.

For additional information about serial numbers, see INSTRUMENTS COVERED BY MANUAL in Section I.

COPYRIGHT © HEWLETT-PACKARD COMPANY, 1979,1983
1424 FOUNTAINGROVE PARKWAY, SANTA ROSA, CALIFORNIA, 95401, USA

MANUAL PART NUMBER 08559-90012
Microfiche Part Number 08559-90013

Printed: January 1984

CONTENTS

Section Page

I GENERAL INFORMATION 1-1
1-1. Introduction 1-1
1-3. Description 1-1
1-6. Manual Organization 1-1
⚠ 1-9. Specifications 1-1
1-11. Safety Considerations 1-2
1-13. Instruments Covered by Manual 1-2
1-14. Serial Numbers 1-2
1-16. Manual Updating Supplement 1-2
1-19. Manual Backdating Changes 1-2
1-22. Accessories Supplied 1-2
1-26. Equipment Required Not Supplied 1-10
1-27. Display Mainframe . . . . . .
1-30. Extender Cable Assembly 1-10
1-32. Equipment and Accessories Available . . . 1-10
1-33. Input Limiter 1-10
1-37. Modification Kit (Option 807 Connections) 1-10
1-39. Oscilloscope Camera 1-10
1-41. Service Accessories 1-10
1-43. Recommended Test Equipment 1-10

II INSTALLATION AND OPERATION VERIFICATION 2-1
2-1. Introduction 2-1
2-3. Initial Inspection 2-1
2-5. Preparation for Use 2-1
2-6. Installation 2-1
2-9. Side Stop Kits 2-1
2-14. Graticule Overlays 2-3
2-17. Operating Environment 2-3
2-19. Modifications 2-3
2-21. Storage and Shipment 2-4
2-22. Environment 2-4
2-24. Packaging 2-4
2-27. Operation Verification 2-4

III OPERATION 3-1
3-1 Introduction 3-1
3-4 Description 3-1
3-5 HP 8559A Spectrum Analyzer 3-1
3-7 HP 853A Spectrum Analyzer Display . . 3-1
3-9 HP-IB 3-1
3-11 Controls, Indicators, and Connectors 3-1
3-12 Control Grouping 3-1
⚠ 3-20 Operating Precautions 3-2
⚠ 3-21 Signal Input 3-2
3-23 Line Power On 3-2
3-27 Front-Panel Adjustment Procedure 3-2

Section Page

⚠ 3-29. Display Adjustments—HP 853A Spectrum Analyzer Display 3-3
⚠ 3-30. Display Adjustments—HP 180-Series Display Mainframe 3-3
3-31. Frequency and Amplitude Adjustments. 3-4

IV PERFORMANCE TESTS 4-1
4-1. Introduction 4-1
4-3. Instruments Tested 4-1
4-5. Equipment Required 4-1
4-7. Test Record 4-1
4-9. Calibration Cycle 4-1
4-11. Frequency Span Accuracy 4-2
4-12. Tuning Accuracy 4-7
4-13. Residual FM 4-10
4-14. Noise Sidebands 4-12
4-15. Resolution Bandwidth Accuraacy 4-14
4-16. Resolution Bandwidth Selectivity 4-20
4-17. Average Noise Level 4-25
4-18. Residual Responses 4-28
4-19. Frequency Response 4-30
4-20. Gain Compression 4-39
4-21. Bandwidth Switching (Amplitude Variation) 4-42
4-22. Input Attenuator Accuracy 4-44
4-23. Reference Level Accuracy 4-47
4-24. Sweep Time Accuracy 4-52
4-25. Calibrator Output Accuracy 4-57
4-26. Display Fidelity 4-58

V ⚠ ADJUSTMENTS 5-1
5-1. Introduction 5-1
5-4. Equipment Required 5-1
5-6. Adjustment Tools 5-1
⚠ 5-9. Extender Cable Installation 5-1
5-13. Related Adjustments 5-2
5-14. Factory Selected Components 5-2
5-17. Power Supply Checks and Adjustments . 5-11
5-18. Calibrated Sweep Time Adjustment . . . 5-14
5-19. Log Amplifier Log and Linear Adjustments 5-17
5-20. 1-dB Offset Adjustment 5-24
5-21. Bandwidth Filter Adjustments 5-26
5-22. 3-dB Bandwidth Adjustments 5-33
5-23. RF Gain Adjustment 5-38
5-24. Step Gain Adjustments 5-41
5-25. First Converter Adjsutments 5-44
5-26. Second Converter Adjustments 5-49
5-27. Third Converter Adjustments 5-54
5-28. Frequency Response Adjustments 5-57

CONTENTS

Section		Page
	5-29. Cal Output and Ref Level Cal Adjustments	5-66
	5-30. Frequency Display Adjustments	5-69
VI	REPLACEABLE PARTS	6-1
	6-1 Introduction	6-1
	6-3. Replaceable Parts List	6-1
	6-6. Ordering Information	6-1
VII	MANUAL BACKDATING CHANGES	7-1
	7-1. Introduction	7-1
	7-4. How to Use This Backdating Information	7-1
VIII	SERVICE	8-1
	8-1. Introduction	8-1
	8-3. Schematic Symbols, Terminology. and Voltage Levels	8-1
	8-5. Test Equipment	8-1
	8-7. Major Assembly Locations	8-1
	8-9. Troubleshooting	8-1
	8-10. General Information	8-1
	8-12. Printed Circuit Board Edge Connector Contact Cleaning	8-2
	The HP 8559A Spectrum Analyzer Theory of Operation	8-9
	Troubleshooting Hints	8-12

SAFETY SYMBOLS

The following safety symbols are used throughout this manual and in the instrument. Familiarize yourself with each of the symbols and its meaning before operating this instrument.

Instruction manual symbol. The instrument will be marked with this symbol when it is necessary for the user to refer to the instruction manual in order to protect the instrument against damage. Location of pertinent information within the manual is indicated by use of this symbol in the table of contents.

Indicates dangerous voltages are present. Be extremely careful.

CAUTION

The CAUTION sign denotes a hazard. It calls attention to a procedure which, if not correctly performed or adhered to, could result in damage to or destruction of the instrument. Do not proceed beyond a CAUTION sign until the indicated conditions are fully understood and met.

WARNING

The WARNING sign denotes a hazard. It calls attention to a procedure which, if not correctly performed or adhered to, could result in injury or loss of life. Do not proceed beyond a WARNING sign until the indicated conditions are fully understood and met.

GENERAL SAFETY CONSIDERATIONS

WARNING

BEFORE THIS INSTRUMENT IS SWITCHED ON, make sure it has been properly grounded through the protective conductor of the ac power cable to a socket outlet provided with protective earth contact. Any interruption of the protective (grounding) conductor, inside or outside the instrument, or disconnection of the protective earth terminal can result in personal injury.

WARNING

There are voltages at many points in the instrument which can, if contacted, cause personal injury. Be extremely careful. Any adjustments or service procedures that require operation of the instrument with protective covers removed should be performed only by trained service personnel.

CAUTION

BEFORE THIS INSTRUMENT IS SWITCHED ON, make sure its primary power circuitry has been adapted to the voltage of the ac power source. Failure to set the ac power input to the correct voltage could cause damage to the instrument when the ac power cable is plugged in.

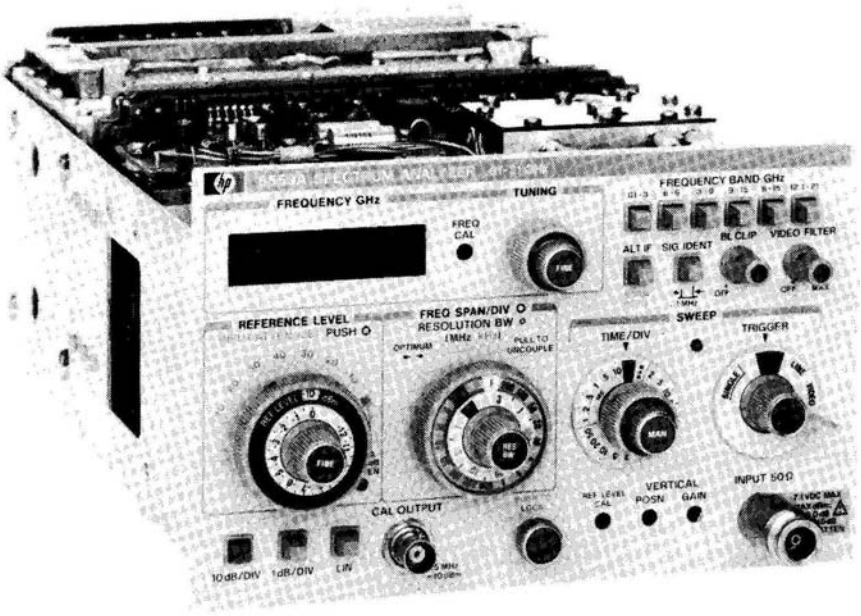

ADAPTER
1250-0780

SIDE STOP KIT
08558-60131

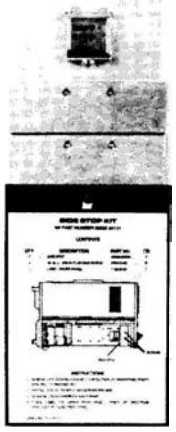

SPECTRUM ANALYZER OVERLAY KIT
5060-0319

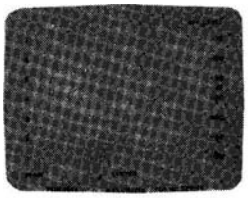

5020-8565

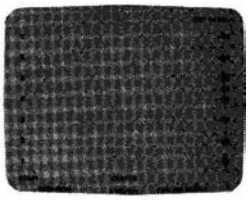

5020-8566

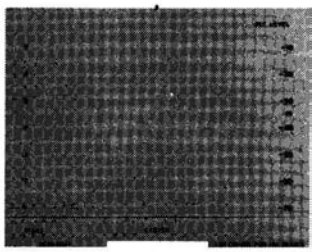

5020-8567

FIGURE 1-1. HP MODEL 8559A SPECTRUM ANALYZER AND ACCESSORIES SUPPLIED

SECTION I
GENERAL INFORMATION

1-1. INTRODUCTION

1-2. This Operation and Service manual contains information required to install, operate, test, adjust, and service the Hewlett-Packard 8559A Spectrum Analyzer. Figure 1-1 shows the instrument and accessories supplied. This section covers instrument identification, description, options, accessories, specifications, and other basic information.

1-3. DESCRIPTION

1-4. The HP 8559A displays the amplitude and frequency of each component of an input signal on a CRT. This display gives quantitative information often not available from a conventional oscilloscope. The HP 8559A is capable of measuring signals from – 112 dBm to + 30 dBm over a frequency range of 10 MHz to 21 GHz.

1-5. The complete measuring system includes the HP 8559A Spectrum Analyzer plugged into a compatible Hewlett-Packard display mainframe.

1-6. MANUAL ORGANIZATION

1-7. This manual is divided into eight sections as follows:

SECTION I, GENERAL INFORMATION; contains the instrument description and specifications, explains accessories and options, and lists recommended test equipment.

SECTION II, INSTALLATION AND OPERATION VERIFICATION; contains information concerning initial mechanical inspection, preparation for use, operating environment, packaging and shipping, and operation verification.

SECTION III, OPERATION; contains detailed operating instructions for operation of the instrument.

SECTION IV, PERFORMANCE TESTS; contains the necessary tests to verify that the electrical operation of the instrument is in accordance with published specifications.

SECTION V, ADJUSTMENTS; contains the necessary adjustment procedures to properly adjust the instrument after repair.

SECTION VI, REPLACEABLE PARTS; contains the information necessary to order parts and/or assemblies for the instrument.

SECTION VII, MANUAL BACKDATING CHANGES; contains backdating information to make this manual compatible with earlier equipment configurations.

SECTION VIII, SERVICE; contains schematic diagrams, block diagrams, component location illustrations, circuit descriptions, and troubleshooting information to aid in repair of the instrument.

1-8. On the title page of this manual, below the manual part number, is a microfiche part number. This number may be used to order 4- by 6-inch microfilm transparencies of the manual. Each microfiche contains up to 60 photo-duplicates of the manual pages. The microfiche package also includes the latest Manual Updating supplement.

1-9. SPECIFICATIONS

1-10. Instrument specifications are listed in Table 1-1. These specifications are the performance standards or limits against which the instrument is tested. Table 1-2 lists supplemental characteristics. Supplemental characteristics are not specifications but are typical characteristics included as additional information for the user.

NOTE

To ensure that the HP 8559A meets the specifications listed in Table 1-1, performance tests (Section IV) should be performed every six months.

1-11. SAFETY CONSIDERATIONS

1-12. Before operating this instrument, you should familiarize yourself with the safety markings on the instrument and safety instructions in this manual. This instrument has been manufactured and tested according to international safety standards. However, to ensure safe operation of the instrument and personal safety of the user and service personnel, the cautions and warnings in this manual must be followed. Refer to the summary of safety considerations at the beginning of this section. Refer also to individual sections of this manual for detailed safety notation concerning the use of the instrument as described in those individual sections.

1-13. INSTRUMENTS COVERED BY MANUAL

1-14. Serial Numbers

1-15. Attached to the rear of this instrument is a mylar serial number label. The serial number is in two parts. The first four digits and letter are the serial number prefix; the last five digits are the suffix. (Refer to Figure 1-2.) The prefix is the same for all identical instruments; it changes only when a change is made to the instrument. The suffix, however, is assigned sequentially and is different for each instrument. The contents of this manual apply to

FIGURE 1-2. TYPICAL SERIAL NUMBER LABEL

instruments with the serial number prefix(es) listed under SERIAL NUMBERS on the title page.

1-16. Manual Updating Supplement

1-17. An instrument manufactured after the printing of this manual might have a serial number prefix that is not listed on the title page. This unlisted serial number prefix indicates the instrument is different from those described in this manual. The manual for this newer instrument is accompanied by a yellow Manual Updating supplement. This supplement contains change information that explains how to adapt the manual to the newer instrument.

1-18. In addition to change information, the supplement may contain information for correcting errors in the manual. To keep this manual as current and accurate as possible, Hewlett-Packard recommends that you periodically request the latest Manual Updating supplement. The supplement carries a manual identification block that includes the model number, print date of the manual, and manual part number. Complimentary copies of the supplement are available from Hewlett-Packard. Addresses of Hewlett-Packard offices are located at the back of this manual.

1-19. Manual Backdating Changes

1-20. Instruments manufactured before the printing of this manual have been assigned serial number prefixes other than those for which this manual was written directly. Manual backdating information is provided in Section VII to adapt this manual to earlier serial number prefixes.

1-21. This information should not be confused with information contained in the yellow Manual Updating supplement, which is intended to adapt this manual to instruments manufactured after the printing of this manual.

1-22. ACCESSORIES SUPPLIED

1-23. A type-N male to BNC female adapter, HP Part Number 1250-0780, is supplied with the standard instrument for the use of lightweight cables with BNC connectors.

1-24. Side stop kit, HP Part Number 08558-60131, is supplied to prevent the spectrum analyzer from sliding out of the mainframe. When the side stops are installed, the plug-in cannot be removed from the mainframe. Refer to Section II for installation or removal of the side stops.

1-25. Three graticule overlays provide the operator with reference-level labels for the CRT. HP Part Number 5020-8565 is the overlay for HP 180-series display mainframes. HP Part Number 5020-8566 is the overlay for HP 181-series display mainframes. HP Part Number 5020-8567 is the overlay for HP 182-series display mainframes. For proper installation of the graticule overlay, refer to Section II.

TABLE 1-1. HP MODEL 8569A SPECIFICATIONS (1 OF 4)

SPECIFICATIONS

FREQUENCY SPECIFICATIONS

FREQUENCY RANGE

10 MHz to 21 GHz, covered in six pushbutton-selectable ranges:

Frequency Band GHz	Mixing Mode (n)	Lowest Freq (GHz) [ALT IF]	Highest Freq (GHz)
.01 – 3	1 –	0.010 [0.025]	3.060
6 – 9	1 +	6.035 [6.020]	9.060
3 – 9	2 –	3.033 [3.048]	9.120
9 – 15	2 +	9.058 [9.043]	15.120
6 – 15	3 –	6.055 [6.070]	15.180
12.1 – 21	3 +	12.080 [12.065]	21.000

FREQUENCY SPANS

Full Span (F)
Entire frequency band displayed with frequency of tunable marker indicated by Frequency GHz readout.

Per Division (MHz/Div, kHz/Div)
14 frequency scale calibrations in 1-2-5 sequence from 10 kHz/div to 200 MHz/div. Center frequency is set with the TUNING control and indicated by the FREQUENCY GHz readout.

Zero Span (0)
Analyzer functions as a manually tuned receiver, at the frequency indicated by the FREQUENCY GHz readout, for time-domain display of signal modulation.

FREQUENCY ACCURACY

Tuning Accuracy
Frequency GHz readout (center or marker frequency), after zeroing on the LO feedthrough:
0.01 – 3.0 GHz: ± (1 MHz + 0.3% of center frequency)
3.0 – 21.0 GHz: ± (5 MHz + 0.2% of center frequency)

Frequency Readout Resolution
1 MHz

Frequency Span Accuracy
± 5% of displayed frequency separation

SPECTRAL RESOLUTION AND STABILITY

Resolution Bandwidths
Eight selectable resolution (3-dB) bandwidths in 1-3 sequence from 1 kHz to 3 MHz. Bandwidth may be selected independently or coupled with frequency span. Optimum ratio of frequency span to resolution bandwidth is indicated by alignment of markers (><) on the two controls.

Resolution Bandwidth Accuracy:
Individual resolution bandwidth 3-dB points:
< ±15% (<±30% for 3-MHz bandwidth)

Selectivity:
60-dB/3-dB resolution bandwidth ratio: <15:1

Stability
For fundamental mixing (n = 1 – or 1+):

Residual FM:
<2 kHz p-p in 0.1 second'

Noise Sidebands:
≥ 70 dB down, >30 kHz from center of CW signal with 1 kHz resolution bandwidth and video filter at MAX (not in detent).

Video Filter
Post-detection low-pass filter averages displayed noise for a smooth trace. The MAX (detent) position selects a video filter bandwidth of approximately 1.5 Hz for noise level measurement.

AMPLITUDE SPECIFICATIONS

AMPLITUDE RANGE

– 111 dBm to + 30 dBm.

'**<2 kHz p-p in 0.1 second in a 180-series display mainframe with** 220/240 line voltage.

TABLE 1-1. HP MODEL 8559A SPECIFICATIONS (2 OF 4)

Maximum Input (without damage) Levels

Total Power:
+20 dBm (O.lW, 2.2 Vrms) with 0 dB input attenuation
+30 dBm (lW, 7.1 Vrms) with ≥10 dB input attenuation

DC: ±7.1V

AC (<100 Hz): 7.1 Vrms

Peak Pulse Power:
+50 dBm (100W, <10 μsec pulse width, 0.01% duty cycle) with input attenuation ≥30 dB

Gain Compression
<0.5 dB for a −10 dBm input level with 0 dB input attenuation.

Average Noise Level
The displayed average noise level determines sensitivity (minimum discernible signal). Signals at this input level peak approximately 3 dB above the displayed noise.
Maximum average noise level with 1 kHz resolution bandwidth, 0 dB input attenuation, and video filter at MAX (detent):

Frequency Band (GHz)	Harmonic Mode	Average Noise Level (dBm)
01 — 3	1−	−111
6 — 9	1+	−108
3 — 9	2−	−103
9 — 15	2+	−98
6 — 15	3−	−93
121 — 18	3+	−92
18 — 21	3+	−90

Calibrated Display Range

Log (from Reference Level):
70 dB with 10 dB/DIV Amplitude Scale
8 dB with 1 dB/DIV Amplitude Scale

Linear:
8 divisions with LIN Amplitude Scale

AMPLITUDE ACCURACY
With AUTO sweep time selected, amplitude accuracy is determined by one or more of the following factors, depending on the measurement technique.'

2When switching to or from the Alternate IF, the REF LEVEL CAL and the FREQ CAL should be readjusted. Without readjustment, an additional reference level error of ±1 dB and an additional frequency readout error of ±1 MHz may result.

Calibrator Output
−10 dBm ± 0.3 dB (into 50Ω)
35 MHz ± 400 kHz

Reference Level
10-dB steps and a 12-dB vernier for calibrated Reference Level adjustment from −112 dBm to +60 dBm.'

Step Accuracy (with 0 dB input attenuation):
−10 dBm to −80 dBm: ±0.5 dB
-10dBmto-100dBm: ±1.0 dB

Vernier Accuracy:
±0.5 dB

Frequency Response
Frequency response, measured with 0 or 10 dB input attenuation, includes input attenuator flatness, mixer flatness, and band-to-band amplitude variation:

Frequency Band GHz	Frequency Response (± dB MAX.)
01 — 3	10
6 — 9	10
3 — 9	15
9 — 15	18
6 — 15	21
121 — 18	23
18 — 21	30

Input Attenuator
0 dB to 70 dB of input attenuation selectable in 10-dB steps

Step Accuracy:
0 dB to 60 dB, 0.01 to 18.0 GHz: <±1.0 dB per 10-dB step

Maximum Cumulative Step Error:
0 dB to 60 dB, 0.01 to 18.0 GHz: <±2.4 dB

Bandwidth Switching (Amplitude Variation)
Bandwidths 3 MHz to 300 kHz: <±0.5 dB
Bandwidths 3 MHz to 1 kHz: <± 1.0 dB

'1nput level not to exceed maximum levels.

TABLE 1-1. HP MODEL 8559A SPECIFICATIONS (3 OF 4)

Display Fidelity

CRT linearity and log or linear fidelity affect amplitude accuracy at levels other than Reference Level.

Log Incremental Accuracy:

±0.1 dB per dB from Reference Level

Log Maximum Cumulative Error:

≤±1.5 dB over entire 70-dB range

Linear Accuracy:

±3% of Reference Level

RESIDUAL RESPONSES

< -90dBm (0.01–3.06 GHz)[4] with 0 dB input attenuation and no signal present at input.

SWEEP SPECIFICATIONS

SWEEP TIME

Automatic (AUTO):

Sweep time adjusted automatically to maintain absolute amplitude calibration for any combination of frequency span, resolution bandwidth, and video filter bandwidth.

Calibrated Sweep Times (sec/Div, mSec/Div, μSec/Div):

20 selectable sweep times in 1-2-5 sequence from 2 μsec/div to 10 sec/div (excluding 2 sec/div), provided primarily for time-domain calibration in zero span (0).

Sweep time accuracy: ±10% (±20% for 5 and 10 sec/div)

GENERAL SPECIFICATIONS

TEMPERATURE RANGE

Operating: 0°C to +55°C

Storage: –40°C to +75°C

HUMIDITY RANGE

Type-tested from 50% to 95% relative humidity (≤+40°C) per requirements of MIL-STD-810C, Method 507.1, Procedure IV.

EMI

Conducted and radiated interference is in compliance with MIL-STD 461A, Methods CEO3 and RE02, CISPR Publication 11 (1975) and Messempfaenger Postverfuegung 526/527/79 (Kennzeichnung Mit F-Nummer/Funkschutzzeichen).

POWER REQUIREMENTS

HP Model 853A Display with HP Model 8559A Spectrum Analyzer:

100 or 120 Vac +5% –10%, 48 to 66 Hz, single-phase. Power consumption less than 200 Volt-amperes with plug-in installed.

HP Model 182T/180TR Display with HP Model 8559A Spectrum Analyzer:

115 or 230 Vac ±10%, 48-440 Hz. Power consumption less than 200 Volt-amperes with plug-in installed, convection cooled.

HP Model 181T/181TR Display with HP Model 8559A Spectrum Analyzer:

115 or 230 Vac ±10%, 48-440 Hz. Power consumption less than 225 Volt-amperes with plug-in installed, convection cooled.

WEIGHT

HP Model 8559A Spectrum Analyzer:

Net: 5.5 kg (12.1 lbs)
Shipping: 9.1 kg (20 lbs)

HP Model 853A Display:

Net: 15.9 kg (35 lbs)
Shipping: 18.6 kg (41 lbs)

HP Model 853A Option 001 Display:

Net: 14.5 kg (32 lbs)
Shipping: 17.3 kg (38 lbs)

HP Model 182T Display:

Net: 12.5 kg (27 lbs)
Shipping: 16.5 kg (36 lbs)

HP Model 181T Display:

Net: 11.0 kg (24 lbs)
Shipping: 15.5 kg (34 lbs)

HP Model 181TR Display:

Net: 12.0 kg (26 lbs)
Shipping: 17.5 kg (38 lbs)

HP Model 180TR Display:

Net: 12.0 kg (26 lbs)
Shipping: 17.5 kg (38 lbs)

[4] 0.025 – 3.06 GHz with ALT IF selected.

TABLE 1-1. HP MODEL 8559A SPECIFICATIONS (4 OF 4)

DIMENSIONS

HP Model 8559A Spectrum Analyzer:

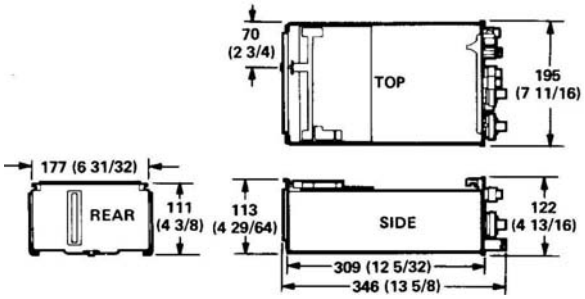

HP Model 182T Display:

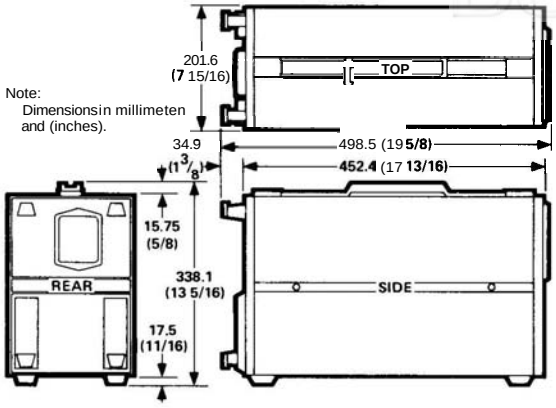

HP Model 853A Display:

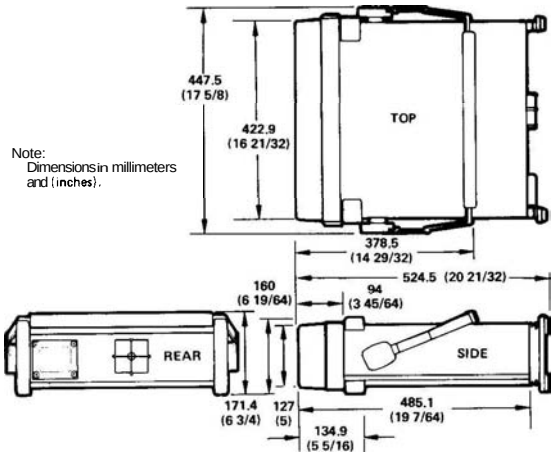

HP Model 181T Display:

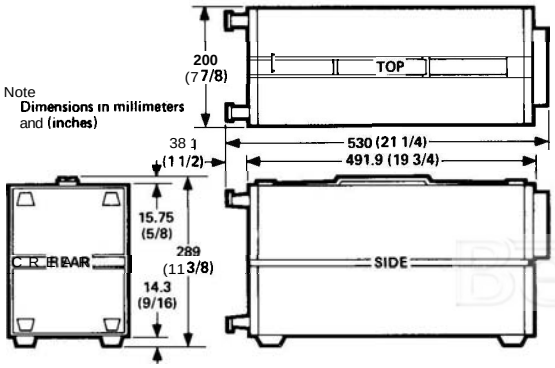

HP Model 853A Option 001 Display:

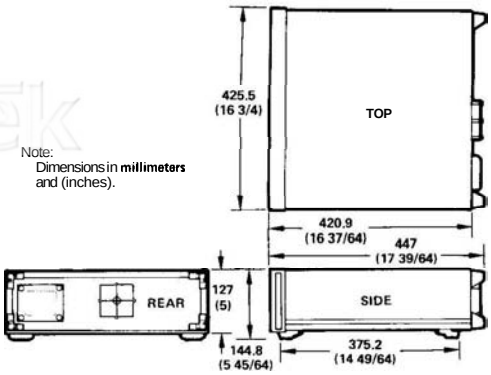

HP Model 180TR/181TR Display:

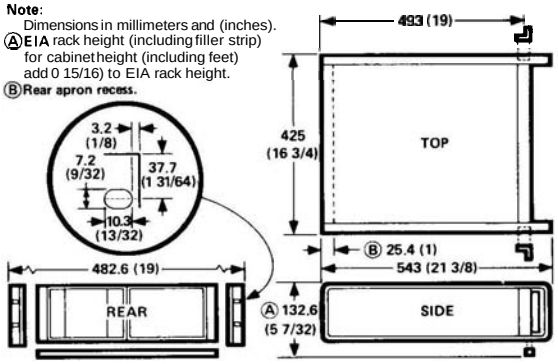

TABLE 1-2. MODEL 8559A/180-SERIES SUPPLEMENTAL CHARACTERISTICS (1 OF 3)

SUPPLEMENTAL CHARACTERISTICS

NOTE: Values in this table are not specifications. They are typical characteristics included for user information.

FREQUENCY CHARACTERISTICS

FREQUENCY ACCURACY

Frequency Cal

Adjusts digital FREQUENCY GHz readout. FREQUENCY CAL control may be used to calibrate the frequency readout on a known signal or on the 35 MHz CAL OUTPUT signal.

FREQUENCY RANGE

Alternate IF

Regular IF approximately 3.0075 GHz. Alternate IF available at approximately 2.9925 GHz for all frequency bands (minimum frequency 25 MHz).

SPECTRAL RESOLUTION AND STABILITY

Frequency Drift
(Fundamental mixing – n = 1 – or 1+)

At fixed center frequency after 2-hour warmup:
< ±25 kHz/10 minutes
With temperature changes:
<200 kHz/°C

Resolution Bandwidth Shape

Approximately gaussian (synchronously-tuned, 4-pole filter).

Spectral Resolution

The following graph shows typical spectrum analyzer resolution for different resolution bandwidths.

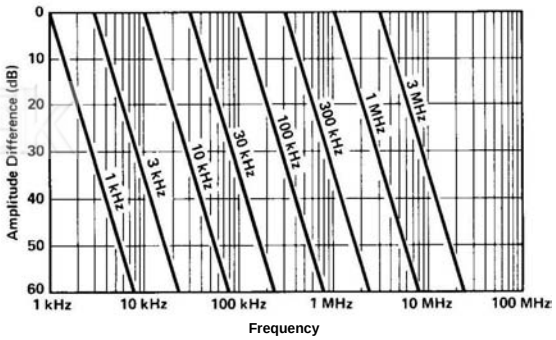

SIGNAL RESOLUTION VS. FREQUENCY SEPARATION

AMPLITUDE CHARACTERISTICS

AMPLITUDE RANGE AND ACCURACY

Dynamic Range

Maximum power ratio of two signals simultaneously present at the input that may be measured within the limits of specified accuracy, sensitivity, and distortion (i.e., spurious responses): >70 dB.

Frequency Response and Average Noise Level

The following graph shows typical frequency response and average noise level versus frequency.

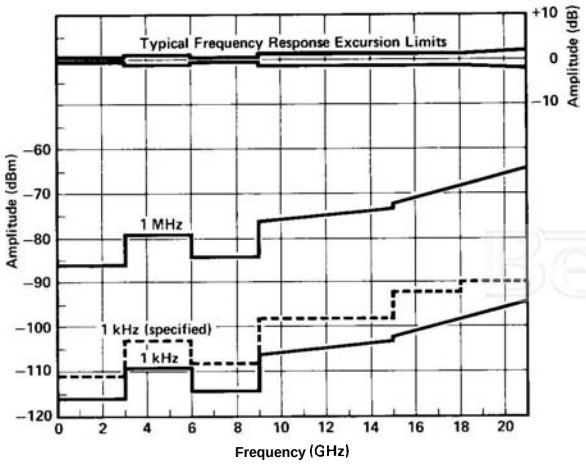

AVERAGE NOISE LEVEL AND FREQUENCY RESPONSE

Amplitude Scale Switching

Reference Level variation is typically less than +/– 1 dB for any change in Amplitude Scale.

SPURIOUS RESPONSES

(with 0 dB input attenuation)
Second Harmonic Distortion

Input Power	Relative Distortion
–40 dBm	<–70 dB

TABLE 1-2. MODEL 8559A/180-SERIES SUPPLEMENTAL CHARACTERISTICS (2 OF 3)

SUPPLEMENTAL CHARACTERISTICS

NOTE: Values in this table are not specifications. They are typical characteristics included for user information.

Third Order Intermodulation Distortion

For Two Input Signals with		Relative Disortion
Input Power	Signal Sep.	
–30 dBm	50 kHz	<–70 dB

Signal Identifier

Signal identifier provided over entire frequency range and in all Frequency Span/Div settings. Correct signal response is a 1 MHz shift to the left and approximately a 6 dB lower amplitude.

SWEEP CHARACTERISTICS

MANUAL SWEEP

Spectrum analyzer may be swept manually, in either direction, with front panel control.

SWEEP TRIGGER

Free Run

End of each sweep triggers new sweep.

Line

Sweep triggered at ac line frequency.

Video

Sweep triggered on post-detection video waveform. One-half major division of vertical deflection required to trigger sweep.

Single

Single sweep started or reset by turning SWEEP TRIGGER clockwise momentarily.

FRONT PANEL INPUT AND OUTPUT CHARACTERISTICS

SIGNAL INPUT

Input Impedance

50 ohms nominal; Precision Type N female connector.

Input SWR

<2.0 SWR with 0 dB input attenuation
<1.3 SWR with ≥10 dB input attenuation

LO Emission (3.0 – 6.1 GHz)

≤ – 8 dBm with 0 dB input attenuation

REAR PANEL OUTPUT CHARACTERISTICS'

VERTICAL, PENLIFT/BLANKING, AND HORIZONTAL OUTPUTS (AUX A, B, D)

These outputs are compatible with and may be used to drive HP X-Y Recorders (using positive pencoils or TTL penlift input) and CRT monitors.

AUX A VERTICAL OUTPUT

BNC output provides detected video signal from a 50-ohm output impedance. Typical 0 – 800 mV range corresponds to full 8-division CRT vertical deflection.

AUX B PENLIFT/BLANKING OUTPUT

BNC output provides a + 15V penlift/blanking signal from a 10K-ohm output impedance when CRT trace is blanked. Otherwise, output is low at 0V (low impedance, 150 mA max.) for an unblanked trace.

'Rear panel outputs refer to 180T-series display mainframes and other 180-series mainframes with Option 807 installed. Horizontal, vertical, and blanking outputs, attenuated and shifted in dc level, are available on other 180-series mainframes at the MAIN SWEEP, MAIN GATE, and DELAYED GATE outputs, respectively. DO NOT connect an X-Y recorder to the DELAYED GATE OUTPUT, or damage will result.

TABLE 1-2. MODEL 8559A/180-SERIES SUPPLEMENTAL CHARACTERISTICS (3 OF 3)

SUPPLEMENTAL CHARACTERISTICS

NOTE: Values in this table are not specifications. They are typical characteristics included for user information.

AUX C 21.4 MHz IF OUTPUT

BNC output provides 21.4 MHz IF signal (linearly related to spectrum analyzer RF input) from a 50-ohm output impedance. Output bandwidth controlled by spectrum analyzer RESOLUTION BW setting; output amplitude controlled by INPUT ATTEN, REFERENCE LEVEL FINE, and first six REFERENCE LEVEL positions (i.e., −10 through −60 dBm with 0 dB input attenuation). Output level is approximately −10 dBm into 50 ohms with a signal displayed at Reference Level.

AUX D HORIZONTAL OUTPUT

BNC output provides horizontal sweep voltage from a SK-ohm output impedance. −5V to +5V range corresponds to full 10-division CRT horizontal deflection.

1-26. EQUIPMENT REQUIRED BUT NOT SUPPLIED

1-27. Display Mainframe

1-28. An HP 853A digital Spectrum Analyzer Display is recommended for use with the HP 8559A. The rear panel of the HP 853A mainframe provides the following output connections: HORIZ (SWEEP), VERTICAL (VIDEO), BLANK (PENLIFT), 21.4 MHz IF, and HP-IB interface connector.

1-29. An HP 180T-series display mainframe (180TR, 181T, 181TR, or 182T) is also designed for use with the HP 8559A. In the HP 180T-series mainframe, the rear-panel auxiliary output connectors (AUX A, AUX B, AUX C, and AUX D) provide, respectively, Vertical Output, Pen Lift Output, 21.4 MHz IF Output, and Horizontal Output. A standard HP 180-series display mainframe (HP 180A/AR, HP 180C/D, HP 181A/AR, HP 182A/C, or HP 184A/B) provides only horizontal, vertical, and blanking rear panel outputs. Furthermore, these outputs are attenuated and shifted in dc level. Unbuffered rear panel outputs (similar to the HP 180T-series) are provided only if Option 807 is installed.

1.30. Extender Cable Assembly

1-31. An Extender Cable Assembly (Figure 1-3), HP Part Number 5060-0303, allows operation of the HP 8559A outside the display mainframe. This provides access to the HP 8559A for necessary adjustments and some performance tests. This cable is also useful for troubleshooting.

1-32. EQUIPMENT AND ACCESSORIES AVAILABLE

1-33. Input Limiter

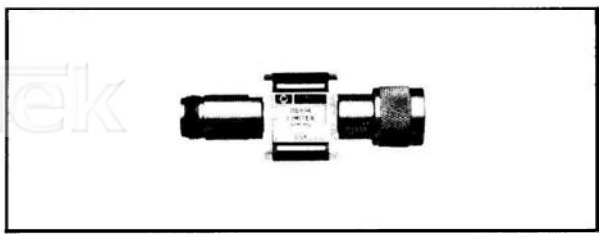

FIGURE 1-3. HP 11683A LIMITER

1-34. The HP 11693A Limiter can be used with the HP 8559A to prevent input mixer damage due to inadvertent application of strong signals. Frequency response flatness is degraded by less than ±0.5 dB from 100 MHz to 12.4 GHz; the limiter is usable from 10 MHz to 18 GHz. Input levels of 1 watt average or 75 watts peak can be tolerated.

1.35. Low Pass Filter

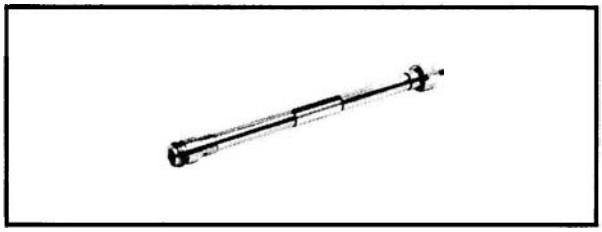

FIGURE 1-4. HP 11870A LOW PASS FILTER

1-36. The HP 11870A Low Pass Filter (dc-2.6 GHz) can be used with the HP 8559A to reject signals above 3 GHz by more than 60 dB for image-free measurements over the 10 MHz to 2.6 GHz range.

1-37. Modification Kit (Option 807 Connections)

1-38. A modification kit, HP Part Number 00180-69503, provides the materials and information necessary to install unbuffered rear panel connections (formerly included in Option 807) in the following display mainframes: HP 180A/AR, HP 180C/D, HP 181A/AR, HP 182A/C, and HP 184A/B. Refer to Table 1-3 for a description of parts included in the modification kit.

1-39. Oscilloscope Camera

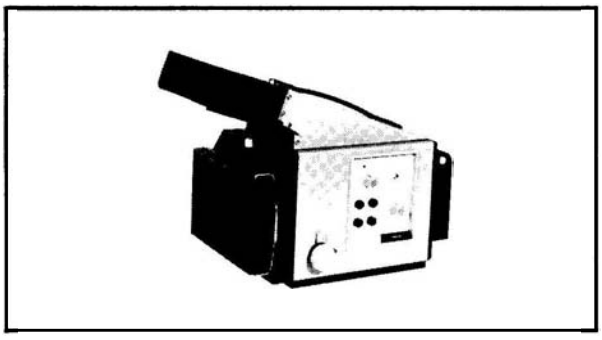

FIGURE 1-5. HP 197B Opt 002,006 OSCILLOSCOPE CAMERA

1-40. The HP 197B, Option 002, General Purpose Camera can be used with HP 180- and HP 181-series display mainframes to make a permanent record of measurements. The HP 10367A adapter allows the camera to be used with HP 182-series mainframes.

TABLE 1-3. PARTS INCLUDED IN MODIFICATION KIT 00180-69503

Quantity	Description	HP Part Number
1	Output Amplifier Assembly (Auxiliary Output Board)	00180-66551
1	Label	7120-3116
2	3/4 inch pieces of shrink tubing	0890-0720
1	Service Note	180A/AR-10, 180C/D-2, 181A/AR8, 182A/C-1, or 184/B-1 (modification is similar for all instruments listed)

1-41. SERVICE ACCESSORIES

1-42. Service accessories are shown in Figure 1-6.

1-43. RECOMMENDED TEST EQUIPMENT

1-44. Table 1-4 lists all of the equipment required for testing, adjusting and troubleshooting the Hewlett-Packard Model 8559A Spectrum Analyzer. Other equipment may be substituted if it meets or exceeds the critical specifications listed in the table.

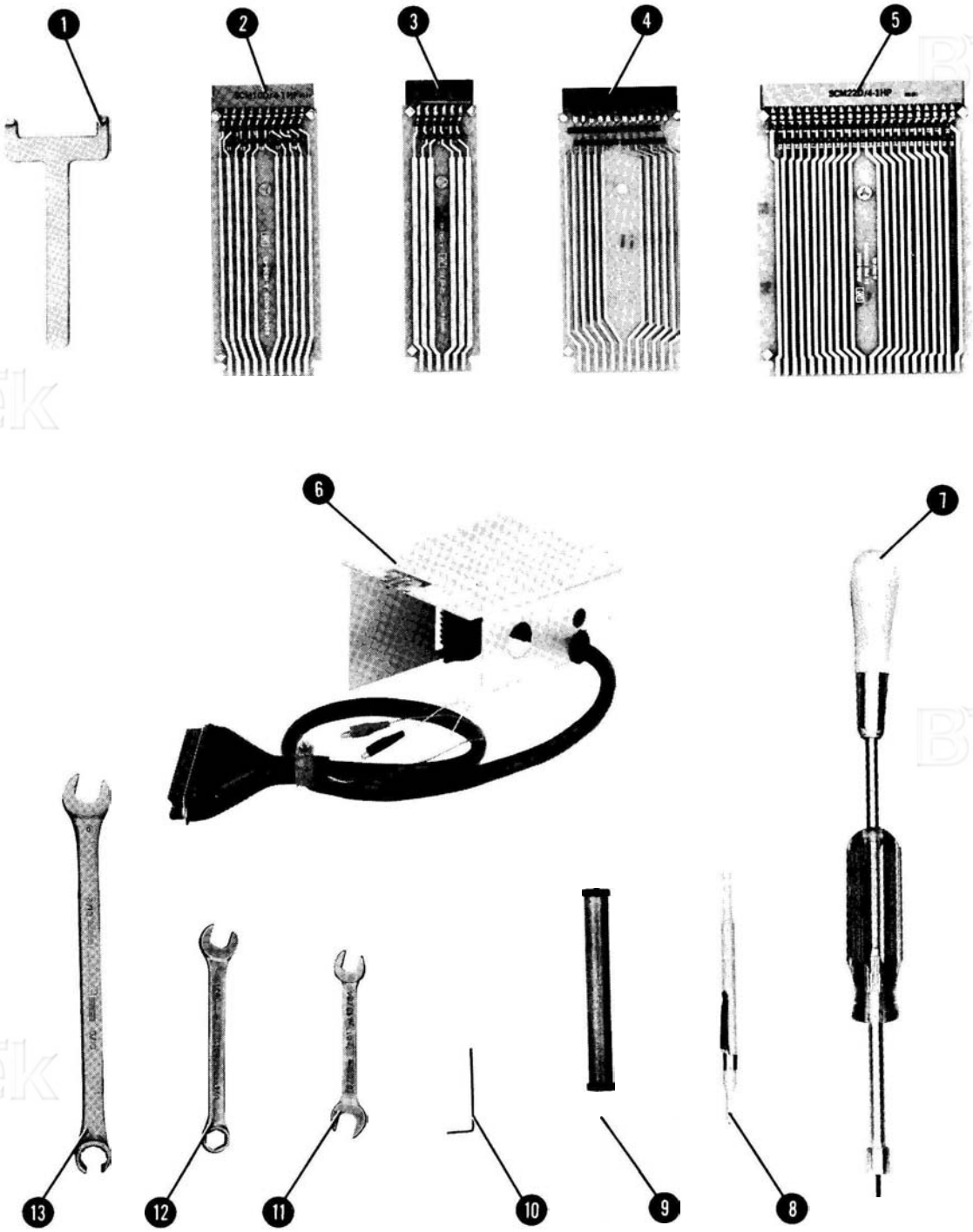

FIGURE 16. SERVICE ACCESSORIES (1 OF 2)

Item	Description	CD	HP Part Number
1	Board Puller, 2 prongs to lift PC boards	1	03950-4001
2	Extender Board, 6 pin, 12 contacts	8	08505-60109
3	Extender Board, 10 pin, 20 contacts	2	85680-60028
4	Extender Board, 12 pin, 24 contacts	2	08559-60042
5	Extender Board, 22 pin, 44 contacts	8	08565-60107
6	Extender Cable Assembly, for plug-in operation out of display mainframe	9	5060-0303
7	Tuning Tool, modified 5/16 inch nut driver with modified No. 10 Allen driver	6	08555-60107
8	Alignment tool, metal tip in plastic	7	8710-0630
9	Alignment tool, non-metallic	4	8710-0033
10	Wrench, No. 2 Bristol	0	8710-0055
11	Wrench, 15/64 inch, combination	8	8710-0946
12	Wrench, 1/4 inch, open end	2	8720-0014
13	Wrench, 5/16 inch, slotted box end/open end	9	08555-20097

FIGURE 1-6. SERVICE ACCESSORIES (2 OF 2)

TABLE 1-4. RECOMMENDED TEST EQUIPMENT (1 OF 4)

Instrument	Critical Specifications	Recommended Model	Use*
Display Mainframe	HP 180 Series with Variable Persistence	HP 181 T/TR	P, A, T
Sweep Oscillator	Mainframe for RF Plug-Ins below. External Sweep Adjustable Sweep range (Marker Sweep)	HP 8620C	P, A
RF Plug-In	Compatible with mainframe above. Output Frequency: 0.01 to 2.4 GHz Output Amplitude: 0 to +10 dBm adjustable FM and Phase Lock Internal and External leveling (both crystal detector and power meter)	HP 86222A/B	P, A
RF Plug-In	Compatible with mainframe above. Output Frequency: 2 to 21 GHz Output Amplitude: Band 1, 0 to +10 dBm adjustable Band 2, 0 to +10 dBm adjustable Band 3, 0 to +3 dBm adjustable Band 4, 0 to +3 dBm adjustable FM and Phase Lock Internal and External leveling (both crystal detector and power meter)	HP 86290B-H08[1]	P, A
Signal Generator	Output Frequency: 21.4 MHz and 321.4 MHz Output Amplitude: −40 to 0 dBm adjustable	HP 8640B	P, A, T
Function Generator	Output Frequency: 1 Hz to 1 MHz adjustable Output Amplitude: 0 to 15V p-p adjustable Triangle-Wave Output	HP 3310A	P, A
Comb Generator	1 MHz comb teeth to 3 GHz 100 MHz comb teeth to 21 GHz	HP 8406A	P, A
Spectrum Analyzer	Frequency Range: 20 MHz to 6 GHz Maximum Input Level: ⩾0 dBm Amplitude Scale: Log 10 dB/DIV and 1 dB/DIV Minimum Resolution Bandwidth: ⩽300 kHz Adjustable Reference Level	HP 8569B	A, T
Synchronizer	Input Frequency: 21.4 MHz Sensitivity: 6 MHz/Volt Error Voltage Output Polarity: + and − Selectable	HP 8709A-H10[2]	A

*P = Performance Test; A = Adjustments; T = Troubleshooting
[1] Option H08 extends the frequency range of the standard HP 86290B from 18.6 GHz to 22 GHz. A standard (18.6 GHz) may be used if Option H08 (22 GHz) is not available.
[2] Option H10 changes input frequency to 21.4 MHz and adds error voltage output polarity selection capability.

TABLE 1-4. RECOMMENDED TEST EQUIPMENT (2 OF 4)

Instrument	Critical Specifications	Recommended Model	Use*
Oscilloscope	Frequency: 500 Hz Display Amplitude: −15 Vdc Single-Channel	HP 1740A	A, T
Frequency Counter	Frequency Range: 20 MHz to 23 GHz Sensitivity: −15 dBm Resolution: 0.1 MHz	HP 5342A-005	P, A, T
Universal Counter	Time Interval Measurement from 1 ms to 500 ms	HP 5300B/5302A	P, A
Digital Voltmeter	Range: −12 to +15 Vdc Accuracy: ±1 mV	HP 3456A	P, A, T
Power Meter	Range: −20 to +10 dBm Resolution: 0.1 dB	HP 435A/B	P, A
Power Sensor	Frequency Range: 50 MHz to 26.5 GHz Maximum SWR: 1.15, 50 MHz to 100 MHz 1.10, 100 MHz to 2 GHz 1.15, 2 to 12.4 GHz 1.20, 12.4 to 18 GHz 1.25, 18 to 26.5 GHz	HP 8485A	P, A
Power Sensor	Frequency Range: 10 MHz to 18 GHz Maximum SWR: 1.40, 10 MHz to 30 MHz 1.18, 30 MHz to 50 MHz 1.10, 50 MHz to 2 GHz 1.18, 2 to 12.4 GHz 1.28, 12.4 to 18 GHz	HP 8481A	P, A
Power Splitter	Frequency Range: 10 MHz to 18 GHz Tracking between output arms: ≤0.25 dB Connectors: Type N (f) input, Type N (m) outputs	HP 11667A-C16[3]	P, A
Step Attenuator	Frequency Range: 20 MHz to 350 MHz Attenuation Range: 0 to 90 dB in 10 dB steps Step Accuracy: ±0.1 dB Overall Accuracy (0 to 90 dB): ±0.2 dB	HP 355D-H82[4]	P, A
Step Attenuator	Frequency Range: 20 MHz to 350 MHz Attenuation Range: 0 to 12 dB in 1 dB steps Step Accuracy: ±0.05 dB Overall Accuracy (0 to 12 dB): ±0.1 dB	HP 355C-H80[5]	P, A

*P = Performance Test; A = Adjustments; T = Troubleshooting
[3] Option C16 provides Type N (m) output connectors to eliminate the use of adapters.
[4] Option H82 is selected for best attenuation accuracy and provides calibration data at 30 MHz and 280 MHz.
[5] Option H80 is selected for best attenuation accuracy and provides calibration data at 100 MHz.

TABLE 1-4. RECOMMENDED TEST EQUIPMENT (3 OF 4)

Instrument	Critical Specifications	Recommended Model	Use*
Fixed Attenuator (2 required)	Frequency Range: 10 MHz to 18 GHz Attenuation: 20 dB ±1.0 dB Connectors: Type N (m) (f)	HP 8491B Option 020[6]	P, A
Fixed Attenuator	Frequency Range: 10 MHz to 18 GHz Attenuation: 10 dB ±0.5 dB Connectors: Type N (m) (f)	HP 8491B Option 010[6]	P, A
Crystal Detector	Frequency Range: 10 MHz to 21 GHz Frequency Response: ±0.6 dB, .01 to 18 GHz Maximum SWR: ≤1.5, .01 to 18 GHz Output Polarity: Negative Connectors: APC −3.5 (SMR) (m) input, SMC (m) output	HP 33330C	P, A
Termination	Frequency Range: 10 MHz to 18 GHz Impedance: 50Ω Connector: Type N (m)	HP 909A Option 012[7]	P
Tuning Voltage Circuit	Refer to Figure 5-17	None	A
Crystal Bypass Networks	Refer to Figure 5-6	None	A
Special Extender Board	Refer to Figure 5-9	None	A
Extender Cable	Extends Spectrum Analyzer Plug-In for Servicing Refer to Figure 1-3.	HP 5060-0303	P, A, T
Cable	Frequency Range: 10 MHz to 21 GHz Maximum SWR: ≤1.4 at 21 GHz Length: 61 cm (24 inches) Connectors: SMA (m) both ends	HP 8120-1578	P, A
Cable	BNC (m) to SMC (f), 36 inches long	HP 11592-60001	P, A
Cable	48 inch, 50Ω coaxial cable with BNC (m) connectors on both ends (3 required)	HP 10503A	P, A, T
Cable	RG-214/U with Type N connectors (2 required)	HP 11500A	P, A
Cable	BNC (m) to Banana Plug	HP 10111A	P, A, T
Test Cable	Connectors: BNC (m) to SMB (f) Length: ≥61 cm (24 inches)	HP 85680-60093	A, T

*P = Performance Test; A = Adjustments; T = Troubleshooting
[6] Option number specifies attenuation value.
[7] Option 012 provides type N male connector.

TABLE 1-4. RECOMMENDED TEST EQUIPMENT (4 OF 4)

Instrument	Critical Specifications	Recommended Model	Use*
Adapter	Type N (m) to BNC (f) (2 required)	HP 1250-0780	P, A, T
Adapter	Type N (m) to SMA (f) (2 required)	HP 1250-1250	P, A
Adapter	Type N (f) to SMA (f) (2 required)	HP 1250-1745	P, A
Adapter	Type N (f) to Type N (f) (2 required)	HP 1250-1472	P, A
Adapter	Type N (f) to BNC (m)	HP 1250-1477	P
Adapter	BNC (f) to SMC (m)	HP 1250-0832	A
Adapter	BNC (f) to BNC (f)	HP 1250-0080	P
Adapter	BNC (f) to alligator clips (2 required)	HP 8120-1292	A, T
Adapter	BNC (f) to SMB (f)	HP 1250-1236	P
Adapter	SMB (m) to SMB (m)	HP 1250-0669	A
Adapter	SMB (f) to SMB (f)	HP 1250-0672	A
Adapter	SMC (m) to SMC (m)	HP 1250-0827	A
Adapter	BNC Tee	HP 1250-0781	P, A
Tuning Tool	Allen Driver inserted through drilled-out 5/16" nut driver	HP 08555-60107	A

*P = Performance Test; A = Adjustments; T = Troubleshooting

SECTION II
INSTALLATION AND OPERATION VERIFICATION

2-1. INTRODUCTION

2-2. This section includes information on initial inspection, preparation for use, and storage and shipping requirements for the HP 8559A.

2-3. INITIAL INSPECTION

2-4. Inspect the shipping container for damage. If the shipping container or cushioning material is damaged, it should be kept until the contents of the shipment have been checked for completeness and the instrument has been checked mechanically and electrically. The contents of the shipment should be as shown in Figure 1-1. The electrical performance is checked by the Operation Verification procedure in this section. If the contents are incomplete, or if the instrument does not pass Operation Verification tests, notify the nearest Hewlett-Packard office. If the shipping container is damaged, or the cushioning material shows signs of stress, notify the carrier as well as the Hewlett-Packard office. Keep the shipping materials for carrier's inspection. The HP office will arrange for repair or replacement without waiting for claim settlement.

2-5. PREPARATION FOR USE

2-6. Installation

2-7. When properly installed, the spectrum analyzer obtains all necessary power from the display mainframe. The rear panel connector provides the interface.

CAUTION

BEFORE SWITCHING ON THIS INSTRUMENT, make sure it is adapted to the voltage of the ac power source to be used and the proper fuse is installed. Failure to set the ac power input of the instrument for the correct voltage level could cause damage to the instrument when plugged in. Refer to the display mainframe Operation and Service Manual for line voltage and fuse selection.

2-8. To install the spectrum analyzer in the mainframe:

a. Set display mainframe LINE switch to OFF.

b. Pull out lock knob and slide plug-in toward rear of compartment until it is seated firmly in place.

c. Push in lock knob to secure spectrum analyzer in mainframe.

2-9. Side Stop Kits

2-10. Side stops unique to the installation of this instrument into the HP 853A Spectrum Analyzer Display are included with the HP 853A. Refer to the HP 853A Operation and Service Manual for further information.

2-11. Installation of a Side Stop Kit, HP Part Number 08558-60131, prevents the removal of the analyzer from the HP 180-series mainframe without the use of hand tools. This kit contains two side stops, mounting hardware, label, and installation instructions. (Refer to Table 2-1 for part numbers of individual items.)

TABLE 2-1. SIDE STOP KIT (08558-60131)

Quantity	Description	HP Part Number	C D
2	SIDE STOP	08558-00094	7
4	MACHINE SCREW, 4-40, .438 IN-LG 82 DEG FLATHEAD	2200-0168	9
1	LABEL, FRONT-PANEL	7120-8131	7
1	LABEL, INSTRUCTIONS	7120-8215	8

2-12. To install side stops:

WARNING

Before removing covers from display mainframe, disconnect line power by removing ac power cord.

1. Remove side covers from bottom section of mainframe. (Remove only right side cover if mainframe is a rack-mounted model.)
2. Use flathead machine screws to install side stops as shown in Figure 2-1.
3. Reinstall side covers on mainframe.
4. Place label on front panel of spectrum analyzer (upper right-hand corner) to indicate that the plug-in is secured with side stops.

2-13. To remove side stops:

WARNING

Before removing covers from display mainframe, disconnect line power by removing ac power cord.

1. Remove side covers from bottom section of mainframe. (Remove only right side cover if mainframe is a rack-mounted model.)
2. Remove side stops. See Figure 2-1.
3. Reinstall side covers on display mainframe.

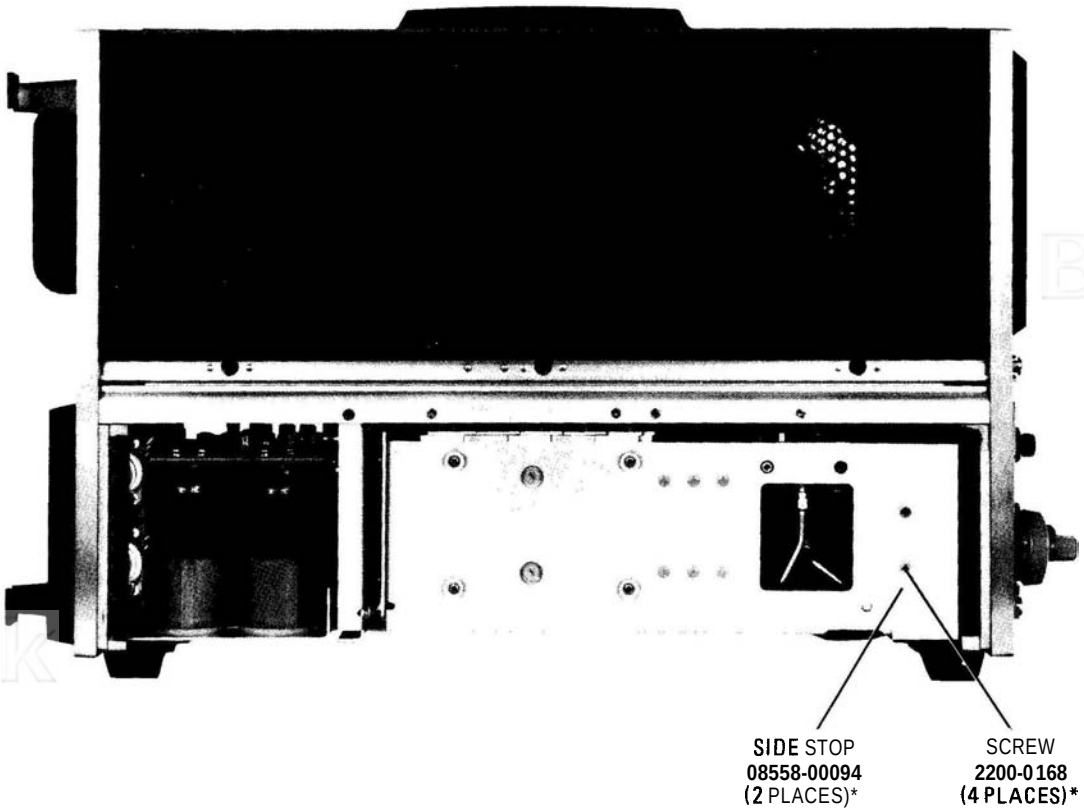

* ONLY ONE SIDE STOP AND TWO SCREWS ARE USED FOR RACKMOUNT MODELS

FIGURE 2-1. LOCATION OF SIDE STOPS

2-14. Graticule Overlays

2-15. To install a graticule overlay:

1. Select proper overlay. HP Part Number 5020-8565 is for HP 180TR display mainframes, HP Part Number 5020-8566 is for HP 181T/TR display mainframes, and HP Part Number 5020-8567 is for HP 182T display mainframes.
2. For HP 180TR and HP 181T/TR mainframes, remove CRT bezel and metallic-mesh contrast filter. Insert proper overlay and replace contrast filter and CRT bezel.
3. For HP 182T mainframes, grasp top portion of CRT bezel and pull straight up. Remove metallic-mesh contrast filter and insert proper overlay and contrast filter. (Either the metallic-mesh contrast filter or a light blue contrast filter may be used.)
4. Slide bezel back into place to retain overlay and filter.

2-16. When the HP 8559A is properly installed in the display mainframe, the interconnections are as listed in Table 2-2.

2-17. Operating Environment

2-18. Temperature. This instrument has been type tested for 95 percent relative humidity at 40°C for five days. The operating environment should be within the following limits:

Temperature ..... 0 to 55°C
Altitude ..... <4572 meters (15,000 feet)

2-19. Modifications

2-20. A Modification Kit, HP Part Number 00180-69503, provides materials and information necessary to add Option 807 rear-panel connections to the standard HP 180-series display. Refer to Table 1-3 in Section I. Option 807 is factory-installed in HP 180TR, HP 181T, HP 181TR, and HP 182T mainframes. The modification kit is required for use with other mainframes if all four rear-panel outputs are needed.

TABLE 2-2. HP MODEL 8559A MAINFRAME INTERCONNECTIONS

Pin on P1	Signal or Voltage	Pin on P1	Signal or Voltage
1	CRT HORIZ (adjusted horizontal signal)	17	BLANKING
		18	NC
2	GROUND from mainframe (jumpered to pin 8)	19	GROUND from mainframe (jumpered to pin 24)
3	NC	20	AUTO SWP
4	L NORM	21	BEAM FINDER
5	Y NORM	22	NC
6	NC	23	NC
7	SING SWP	24	GROUND from mainframe (jumpered to pin 19)
8	GROUND from mainframe (jumpered to pin 2)	25	NC
9	MAN SWP	26	NC
10	NC	27	NC
11	AUX D Horizontal Output (to mainframe rear panel)	28	−12.6 VDC from mainframe
		29	+15 VDC from mainframe
12	AUX C 21.4 MHz IF Output (to mainframe rear panel)	30	+100 VDC from mainframe
		31	30V p-p from mainframe (for LINE TRIGGER)
13	AUX B Penlift/Blanking Output (to mainframe rear panel)	32	NC
14	AUX A Vertical Output (to mainframe rear panel)	W5 (2 contacts)	+VERT (top contact, yellow wire)
15	GROUND		− VERT (bottom contact, orange wire)
16	NC		

2-21. STORAGE AND SHIPMENT

2-22. Environment

2-23. The instrument may be stored or shipped in environments within the following limits:

Temperature: –40°C to +75°C
Altitude: <7620 meters (25,000 feet)

The instrument should also be protected from temperature extremes which cause condensation within the instrument.

2-24. Packaging

2-25. Original Packaging. Containers and materials identical to those used in factory packaging are available through Hewlett-Packard offices. If the instrument is being returned to Hewlett-Packard for servicing, attach a tag indicating the type of service required, return address, model number, and full serial number. A supply of these tags is provided at the end of this section. Also mark the container FRAGILE to assure careful handling. In any correspondence, refer to the instrument by model number and full serial number.

2-26. Other Packaging. The following general instructions should be used for repackaging with commercially available materials:

1. Wrap the instrument in heavy paper or plastic. If shipping to a Hewlett-Packard office or service center, attach a tag indicating the type of service required, return address, model number, and full serial number. A supply of these tags is provided at the end of this section.
2. Use a strong shipping container. A double-wall carton made of 350-pound test material is adequate.
3. Use enough shock-absorbing material (3-inch to 4-inch layer) around all sides of the instrument to provide firm cushion and prevent movement inside the container. Protect the control panel with cardboard.
4. Seal the shipping container securely.
5. Mark the shipping container FRAGILE to assure careful handling.

2-27. OPERATION VERIFICATION

2-28. The Operation Verification tests only the most critical specifications and operating features of the instrument. It requires much less time and equipment than the complete performance tests provided in Section IV, and is recommended for verification of overall instrument operation, either as part of incoming inspection or after repair. Operation Verification consists of the following performance tests:

- Paragraph 4-11, Frequency Span Accuracy
- Paragraph 4-17, Average Noise Level
- Paragraph 4-21, Bandwidth Switching (Amplitude Variation)
- Paragraph 4-22, Input Attenuator Accuracy
- Paragraph 4-25, Calibrator Accuracy
- Paragraph 4-26, Display Fidelity

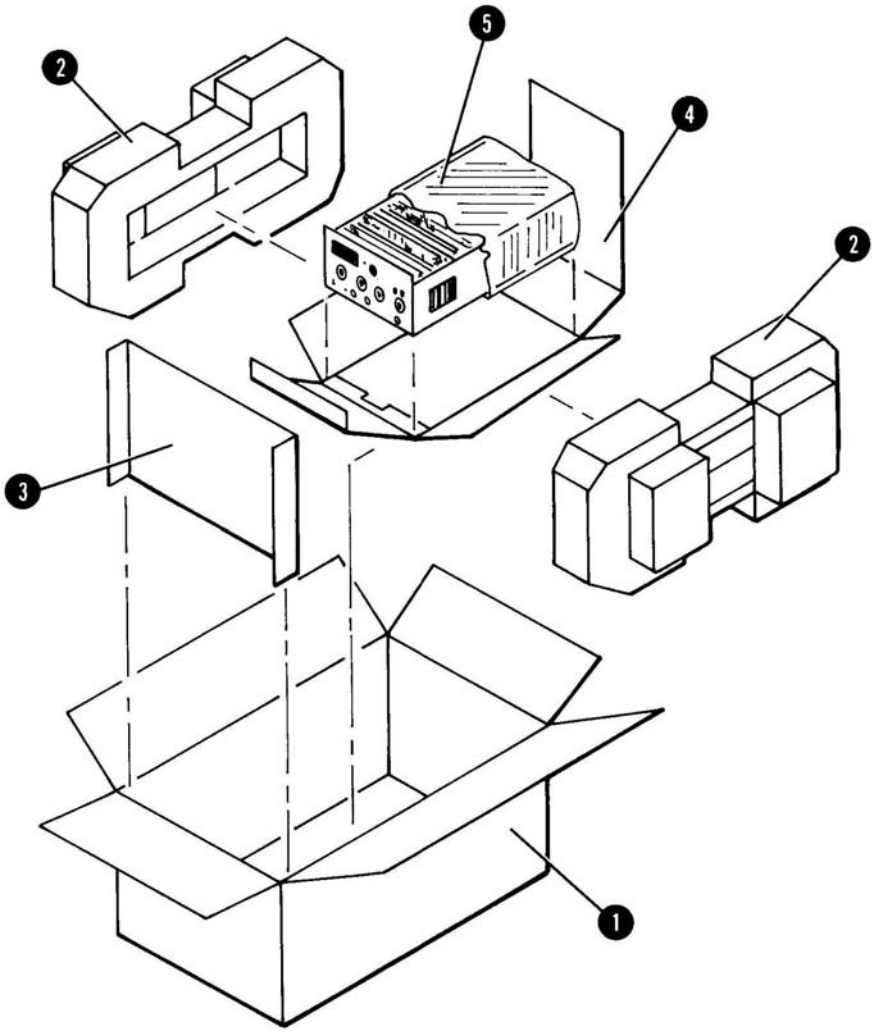

Item	Qty	CD	HP Part No.	Description
1	1	4	9211-3026	CARTON—OUTER
2	2	1	9220-3024	FOAM PADS—INNER
3	1	7	9220-3129	MANUAL PAD—FRONT
4	1	9	9220-3048	CARTON—INNER
5	1	7	9222-1054	BAG—ANTISTATIC

FIGURE 2-2. PACKAGING FOR SHIPMENT USING FACTORY PACKAGING MATERIALS

SECTION III
OPERATION

3-1. INTRODUCTION

3-2. This section provides operating information for the HP 8559A Spectrum Analyzer plug-in. It also provides a brief description of display mainframe controls. For a detailed description of the display mainframe, refer to its manual.

3-3. The HP 8559A Spectrum Analyzer plug-in can be used with either the 180-series display mainframes or the HP 853A Spectrum Analyzer Display mainframe.

3-4. DESCRIPTION

3-5. HP 8559A Spectrum Analyzer

3-6. The HP 8559A employs harmonic mixing to cover a measurement range of 10 MHz to 21 GHz in six frequency bands. It can display frequency spans as narrow as 100 kHz, and as wide as 9 GHz (the latter in full span mode). A five-digit LED readout indicates the spectrum analyzer center frequency with a resolution of 1 MHz. The HP 8559A can be used to measure signals over an amplitude range of −111 dBm to +30 dBm.

3-7. HP 853A Spectrum Analyzer Display

3-8. The HP 853A Spectrum Analyzer Display is a large-screen, digital storage display mainframe for use exclusively with the HP 8559A, 8558B, and 8557A Spectrum Analyzer plug-ins. Digital memory provides buffer storage for two independent traces, both of which can be displayed or blanked as desired. Digital processing also provides push-button features such as maximum signal hold, digital averaging, and trace normalization. A conventional analog display mode can also be selected.

3-9. HP-IB

3-10. The HP 853A has limited HP-IB capabilities. CRT trace and graticule data is dumped directly to a listen-only HP-IB plotter by pressing two front-panel push buttons. Control settings on the spectrum analyzer plug-in cannot be monitored via the HP-IB; however, all digital display functions are programmable via a controller, and two lines of annotation can be displayed on the CRT for labelling purposes or operator prompting. In addition, controller commands allow transfer of trace data for analysis or storage.

3-11. CONTROLS, INDICATORS, AND CONNECTORS

3-12. Control Grouping

3-13. The Spectrum Analyzer plug-in and Display mainframe front-panel controls fall into three general groups: those that deal with the display, those that deal with frequency, and those that deal with amplitude. These controls are shown in Figure 3-1 and accompanied by detailed explanations of their use.

3-14. Display. The display group consists of:

SWEEP TIME/DIV
SWEEP TRIGGER
VERT POSN
VERT GAIN
MANUAL SWEEP
HORIZ GAIN (rear panel of HP 8559A)
VIDEO FILTER
BASELINE CLIPPER
HORIZONTAL POSITION
INTENSITY
FOCUS
TRACE ALIGN

3-15. The display group enables the operator to calibrate the display and to select a variety of scan and display conditions. However, when the SWEEP TIME/DIV Control is placed in the AUTO position, sweep time is controlled by the RESOLUTION BW, FREQ SPAN/DIV, and VIDEO FILTER controls.

3-16. Frequency. The frequency group consists of:

TUNING
FREQUENCY BAND GHz
ALT IF
SIG IDENT
RESOLUTION BW
FREQ SPAN/DIV

3-17. The frequency group enables the operator to control how the Spectrum Analyzer displays the frequency domain. The RESOLUTION BW and FREQ SPAN/DIV controls, when pushed in, are coupled together, and moving either control moves the other. When the SWEEP TIME/DIV control is in the AUTO position, varying the RESOLUTION BW or the FREQ SPAN/DIV (coupled or uncoupled) will change the sweep time to maintain calibration. With the two controls coupled together in the optimum position, RESOLUTION BW's of 3 MHz to 1 kHz will be automatically selected as the FREQ SPAN/DIV is narrowed from F (Full) to 0 (Zero). TUNING controls coarse and fine (coarse is larger knob) set the center frequency of the displayed spectrum. RESOLUTION BW control determines the resolution of the signals on the CRT.

3-18. Amplitude. The amplitude group consists of:

REFERENCE LEVEL dBm
INPUT ATTEN
REF LEVEL FINE
REF LEVEL CAL
10 dB/DIV – 1 dB/DIV – LIN (Amplitude Scale)

3-19. The amplitude group enables the operator to measure signal amplitude in units of either voltage or dBm.

3-20. OPERATING PRECAUTIONS

3-21. Signal Input

3-22. The HP 8559A Spectrum Analyzer plug-in is a sensitive measuring instrument. Overloading the input with too much power, peak voltage, or dc voltage will permanently damage the input circuits. Do not exceed the input levels specified below:

Maximum Input (Damage) Levels

HP 8559A

Total Power:
+20 dBm (0.1W, 2.2 Vrms) with 0 dB input attenuation
+30 dBm (1W, 7.1 Vrms) with ≥ 10 dB input attenuation

dc or ac (<100 Hz): ±7.1V

Peak Pulse Power: +50 dBm (100W, >10μsec pulse width, 0.01% duty cycle) with ≥ 30 dB input attenuation

NOTE

When you are measuring input signals of unknown power levels, a preliminary instrument setting of ≥ 30 dB INPUT ATTEN is recommended.

CAUTION

Although the spectrum analyzer's reference level can be set for power levels up to +60 dBm, the total input power must not exceed the absolute maximum limits listed above.

3-23. Line Power On

3-24. Before connecting the line power cord, make sure the proper line voltage and line fuse have been selected for the display mainframe. Failure to set the ac power input selector on the display mainframe to correspond with the level of the ac source voltage could cause damage to the instrument when the power cord is plugged in.

WARNING

The spectrum analyzer and any device connected to it must be connected to power line ground. Failure to ensure proper grounding could result in a shock hazard to personnel or damage to the instrument.

3-25. LINE power is switched at the display mainframe front panel. A safety indicator lights when the ac power is on. **NEVER** remove a spectrum analyzer plug-in from the display mainframe without first switching the ac LINE power switch to OFF.

3-26. For optimum performance, you should allow the spectrum analyzer to warm up for at least 30 minutes before using it to make measurements.

3-27. FRONT-PANEL ADJUSTMENT PROCEDURE

3-28. The front-panel adjustment procedure adapts the HP 8559A Spectrum Analyzer plug-in to a particular display mainframe, and should be performed daily after instrument warm-up. The step-by-step adjustment is also an excellent way for new users to become acquainted with the various spectrum analyzer controls. Once the procedure is completed, the

spectrum analyzer is calibrated for absolute amplitude and frequency measurements. Set the controls as shown in Table 1 before you start the adjustment procedure.

TABLE 1. ADJUSTMENT SETTINGS

Function	Setting
Spectrum Analyzer Plug-In	
INPUT ATTEN (dB)*	10 dB
REFERENCE LEVEL	0 dBm
Option 002	+50 dBmV
REF LEVEL FINE	0 dBm
Amplitude Scale	LIN
FREQ SPAN/DIV	10 MHz (uncoupled)
RESOLUTION BW	1 MHz (uncoupled)
SWEEP TIME/DIV	AUTO
SWEEP TRIGGER	FREE RUN
START–CENTER (8558B, 8557A)	CENTER
FREQUENCY BAND GHz (8559A)	.01–3
TUNING	>60 MHz
BASELINE CLIPPER	OFF
VIDEO FILTER	OFF
*On older plug-ins, set OPTIMUM INPUT to –30 dBm.	
HP 853A Spectrum Analyzer Display	
TRACE A	WRITE
TRACE B	STORE BLANK
DGTL AVG	OFF
INPUT–B→A	OFF
HP 180-Series Display Mainframe	
DISPLAY	INT
MAGNIFIER	X1
SCALE (180TR, 182T)	OFF
PERSISTENCE (181T/TR)	MIN
Display Mode (181T/TR)	WRITE

3-29. Display Adjustments – HP 853A Spectrum Analyzer Display

1. Switch LINE power OFF then ON while holding PLOT GRAT push button depressed to activate the digital test routines. The "#0" that appears on the left side of the CRT means digital test routine #0 is now activated.
2. Press and release the PLOT GRAT push button four times to step to digital test routine #4, as indicated by the "#4" displayed on the left side of the CRT.
3. With an adjustment tool, adjust the FOCUS control as necessary to make the characters on the CRT as clear as possible.
4. Adjust the X POSN and Y POSN controls the align the square trace pattern with the outermost CRT graticule lines.
5. Momentarily press the PLOT GRAT and PLOT TRACE push buttons simultaneously to exit the digital test routines.

3-30. Display Adjustments – HP 180-Series Display Mainframe

1. With an adjustment tool, adjust the VERTICAL POSN control to place the CRT trace on a horizontal graticule line near the CRT center.
2. Reduce the INTENSITY and set the SWEEP TIME/DIV control to MAN. Use the MAN SWEEP knob to center the CRT dot.

CAUTION

Leaving a dot on the CRT for prolonged periods at high intensity can burn the phosphor.

3. Adjust FOCUS and ASTIG controls for the smallest round dot possible.
4. Reset the SWEEP TIME/DIV control to AUTO and increase the INTENSITY for an optimum CRT trace. Adjust the HORIZONTAL POSITION control to center the CRT trace. If the horizontal deflection is not exactly 10 divisions, adjust the HORIZ GAIN control located on the rear panel of the spectrum analyzer plug-in.

NOTE

To adjust the HORIZ GAIN, you must switch the LINE power OFF, then remove the spectrum analyzer plug-in from the mainframe.

5. **Adjust TRACE ALIGN so that the CRT trace** is parallel to the horizontal graticule line.

3-31. Frequency and Amplitude Adjustments

1. Adjust VERTICAL POSN to align the CRT trace with the bottom graticule line.

2. Center the LO feedthrough (i.e., the "signal" at 0 MHz) on the CRT with the TUNING control.

3. Narrow the FREQ SPAN/DIV to 200 kHz. Adjust the REF LEVEL FINE control as necessary to position the signal peak near the top CRT graticule line.

4. Center the LO feedthrough again, if necessary, and adjust the FREQ ZERO to calibrate the FREQUENCY MHz readout at 00.0 MHz.

5. Set the FREQ SPAN/DIV control to 1 MHz and the REF LEVEL FINE control to 0. Adjust the TUNING control for a FREQUENCY MHz readout of approximately 250 MHz.

6. Press the 10 dB/DIV Amplitude Scale push button, and set the REFERENCE LEVEL control to −20 dBm (+30 dBmV for Option 002 instruments).

7. Connect the 250 MHz CAL OUTPUT to the spectrum analyzer input, and center the signal on the CRT with the TUNING control. The FREQUENCY MHz readout will indicate 250 MHz ± 3 MHz.

8. Press the LIN Amplitude Scale push button. Adjust the REF LEVEL FINE control to place the signal peak at the top CRT graticule line.

9. Press the 10 dB/DIV Amplitude Scale push button. Adjust VERTICAL GAIN to place the signal peak at the top CRT graticule line.

10. Repeat steps 8 and 9 until the signal peak remains at the top CRT graticule line when the Amplitude Scale is alternated between 10 dB/DIV and LIN.

11. Set the REF LEVEL FINE control to 0, and the REFERENCE LEVEL control to −30 dBm (+20 dBmV for Option 002 instruments).

12. Press the LIN Amplitude Scale push button, and adjust REF LEVEL CAL to place the signal peak at the top CRT graticule line.

HP 853A SPECTRUM ANALYZER DISPLAY

REAR PANEL FEATURES

1 Line Power Receptacle: Three-conductor male receptacle for connecting ac power cable. Power plug retaining bracket, included with standard instrument, can be installed to prevent power cable disconnection when instrument is in transit. Power cable coils on special rear feet when not in use.

2 FUSE: Spring-loaded holder for cartridge-type primary power fuse.

3 SELECTOR (VOLTS): Adapts primary power transformer configuration to voltage of ac primary power source.

4 ADDRESS: Switch settings determine address of instrument to be used for communications via HP-IB. Address is set as sum of the switches, where A5 = 16, A4 = 8, A3 = 4, A2 = 2, and A1 = 1.

5 HORIZ (SWEEP) OUTPUT: BNC jack is a sweep output or sweep input, depending on the position of SWEEP switch on Interface Assembly A9. SWEEP switch on assembly A9 is factory set for sweep output (INT).

As a BNC output, HORIZ (SWEEP) OUTPUT provides horizontal sweep voltage from a 5K-ohm output impedance. The −5V to +5V output range corresponds to a full 10-division CRT horizontal deflection.

As a BNC input with a 20K-ohm input impedance, HORIZ (SWEEP) OUTPUT allows the CRT display to be swept by a −5V to +5V external horizontal sweep signal (approximately 30V/sec maximum sweep rate for digital display mode).

6 VERTICAL (VIDEO) OUTPUT: BNC output provides detected video signal from a 50-ohm output impedance. Typical 0 – 800 mV output range corresponds to full 8-division CRT vertical deflection.

7 BLANK (PENLIFT) OUTPUT: BNC output provides a +15V penlift/blanking signal from a 10K-ohm output impedance when CRT trace is blanked. Otherwise, output is low at 0V (low impedance, 150 mA max.) for an unblanked trace.

8 21.4 MHz IF OUTPUT: BNC output provides 21.4 MHz IF signal (linearly related to spectrum RF input) from a 50-ohm output impedance. Spectrum analyzer RESOLUTION BW controls the output bandwidth. Spectrum analyzer INPUT ATTEN, REFERENCE LEVEL FINE, and the first six REFERENCE LEVEL positions control the output amplitude. Output level is approximately −10 dBm into 50 ohms with a signal displayed at Reference Level.

9 HP-IB Connector: Hewlett-Packard Interface Bus connection allows remote instrument operation and direct digital plotting of CRT display.

FRONT PANEL FEATURES

10 TRACE A, B: Selects CRT display mode for each of two independent digital trace memories.

CLEAR WRITE: Continuously updates trace memory with current input signal data and displays trace memory contents on CRT.

MAXHOLD: Updates trace memory with maximum input signal data and displays trace memory contents on CRT.

STORE VIEW: Current trace memory contents are preserved and displayed on CRT.

STORE BLANK: Current trace memory contents are preserved without being displayed on CRT.

ANALOG DISPLAY: CRT display switches to conventional analog display of current input signal when both STORE BLANK push buttons are depressed.

11 DGTL AVG: Activates digital filtering algorithm that averages trace data over successive sweeps. Digital averaging should be restarted after any change in spectrum analyzer control settings.

12 INPUT − B→A: Subtracts contents of trace B memory point-by-point from current input signal data and stores result (normalized input signal data) in trace A memory. Reference line is factory-preset at center horizontal CRT graticule line; normalized trace appears at reference line when input signal data is identical to stored trace B. Reference line indicates 0 dB for relative amplitude measurements.

13 PLOT GRAT/HP-IB CLEAR: Initiates sequence of plotter commands over HP-IB to plot CRT graticule lines (and remotely-programmed annotation). Press push button again to abort active plot. HP-IB plotter must be set to listen-only mode.

To recover from illegal HP-IB commands (SYNTAX ERR) and to reset display state, press push button for at least 3 seconds to perform HP-IB CLEAR. Instrument returns to LOCAL and discontinues any HP-IB operation in progress.

Activate digital test routines by pressing PLOT GRAT push button while switching LINE power ON. Push button then selects desired test routine. Press both PLOT GRAT and PLOT TRACE push buttons to revert to normal display state.

14 PLOT TRACE: Initiates sequence of plotter commands over HP-IB to plot displayed CRT trace(s). Press push button again to abort active plot. HP-IB plotter must be set to listen-only mode.

15 LINE: AC line switch. Switches instrument primary power ON and OFF.

16 INTENSITY: Adjusts brightness of CRT trace(s) and annotation characters.

17 SCALE: Adjusts CRT background illumination. SCALE control is disabled in ANALOG DISPLAY mode.

18 Y POSN: Adjusts vertical position CRT trace. Use Y POSN with reference pattern in digital test routine #4 to align digital trace memory coordinates with corresponding CRT graticule lines.

19 X POSN: Adjusts horizontal position of CRT trace. Use X POSN with reference pattern in digital test routine #4 to align digital trace memory coordinates with corresponding CRT graticule lines.

20 TRACE ALIGN: Rotates trace about center of CRT.

21 FOCUS: Adjusts sharpness of CRT trace.

22 CRT Annotation: Indicates display control settings.

HP 8559A SPECTRUM ANALYZER PLUG-IN

23 FREQUENCY GHz: Displays spectrum analyzer center frequency.

24 FREQ CAL: Adjusts FREQUENCY GHz **(23)** readout for calibration on 35 MHz CAL OUTPUT signal.

25 TUNING: Adjusts spectrum analyzer start or center frequency. Coarse tuning is provided by large knob; smaller knob provides FINE tuning.

26 FREQUENCY BAND GHz (HP 8559A): Selects calibrated frequency band. Shifts FREQUENCY GHz **(23)** readout and adjusts CRT frequency and amplitude calibration for proper display of in-band signals.

27 ALT IF: Shifts first IF 15 MHz to eliminate baseline lift caused by input signals at approximately 3.0075 GHz.

28 SIG IDENT: Identifies correct FREQUENCY BAND GHz **(26)** for unknown signal. Shifts IF and lowers displayed signals on alternate spectrum analyzer sweeps. Correct response is 1 MHz shift to left.

29 VERTICAL POSN: Adjusts vertical position of CRT trace.

30 VERTICAL GAIN: Adjusts deflection circuit gain for amplitude scale calibration of CRT display.

31 BASELINE CLIPPER: Prevents CRT blooming in variable persistence, storage display mainframes (such as the HP 181T/TR) by blanking the lower portion of the CRT display. When it is operating in its digital display mode, the HP 853A Spectrum Analyzer Display does not respond to this control.

32 VIDEO FILTER: Post-detection low-pass filter smooths CRT trace by averaging random noise. The MAX (detent) position selects 1.5 Hz bandwidth for maximum noise averaging and noise level measurements. The VIDEO FILTER bandwidth is scaled by resolution bandwidth **(39)** setting. The MAX VIDEO FILTER should **not** be used for CW signal analysis.

33 SWEEP Indicator: Remains lit during each sweep.

34 SWEEP TRIGGER: Selects sweep trigger mode.

VIDEO: Sweep triggered on internal post-detection video waveform. One-half major division of vertical deflection (noise, AM signal, etc.) is required to trigger sweep. VIDEO is normally used with 0 (zero) frequency span for time-domain analysis.

LINE: Sweep triggered at ac line frequency.

FREE RUN: End of each sweep triggers new sweep.

SINGLE: Single sweep triggered or reset by turning SWEEP TRIGGER clockwise momentarily.

35 INPUT 50Ω: Precision type N (female) or BNC (female) signal input connector with 50-ohm input impedance.
Options 001 and 002: INPUT 75Ω – 75-ohm BNC (female) signal input connector.

CAUTION

50-ohm BNC connectors might cause damage if used directly with Option 001 and 002 75-ohm BNC INPUT and CAL OUTPUT connectors.

36 SWEEP TIME/DIV: Selects time required to sweep one major horizontal division on CRT.

AUTO: Automatically selects fastest allowable sweep time as a function of FREQ SPAN/DIV **(38)**, RESOLUTION BW **(39)**, and VIDEO FILTER **(32)** settings to maintain display amplitude calibration. AUTO operation retained with FREQ SPAN/DIV and RESOLUTION BW controls uncoupled.

TIME/DIV: Selects calibrated sweep time. TIME/DIV is used primarily with 0 (Zero) frequency span for time-domain analysis of modulation waveforms. Display amplitude calibration not guaranteed for other frequency spans.

MAN: Enables manual frequency scan using MAN SWEEP knob.

37 REF LEVEL CAL: Adjusts spectrum analyzer RF gain to calibrate top CRT graticule line for absolute amplitude measurements.

38 FREQ SPAN/DIV: Selects CRT horizontal axis frequency calibration.

MHz/DIV
kHz/DIV: Selects desired frequency span. Alignment of OPTIMUM markings (> <) selects optimum resolution bandwidth **(39)**.

0 (Zero Span): Spectrum analyzer operates as a manually-tuned receiver, at frequency indicated by FREQUENCY GHz or FREQUENCY MHz readout, for time-domain display of signal modulation.

F (Full Band): Spectrum analyzer sweeps entire selected frequency band. FREQUENCY GHz **(23)** readout corresponds to location of tuning marker displayed on CRT.

39 RESOLUTION BW: Selects spectrum analyzer 3-dB bandwidth. Alignment of OPTIMUM markings (> <) automatically selects optimum resolution bandwidth for any frequency span. When pushed in, RESOLUTION BW couples mechanically with FREQ SPAN/DIV **(38)**.

40 CAL OUTPUT: BNC (female) output provides calibration signal from 50-ohm output impedance.
Options 001 and 002: 75-ohm output impedance.

CAUTION

50-ohm BNC connectors might cause damage if used directly with Option 001 and 002 75-ohm BNC INPUT and CAL OUTPUT connectors.

41 10 dB/DIV – 1 dB/DIV – LIN (Amplitude Scale): Selects CRT vertical axis amplitude calibration (logarithmic or linear scale). Reference Level remains constant at top CRT graticule line.

42 REFERENCE LEVEL: Adjusts power level (in dBm or dBmV) represented by top CRT graticule line. Large outer knob adjusts REFERENCE LEVEL in calibrated 10-dB steps; FINE vernier provides 12 dB of continuous adjustment.

43 INPUT ATTEN: Selects desired RF input attenuation, indicated by blue numbers (push and turn).

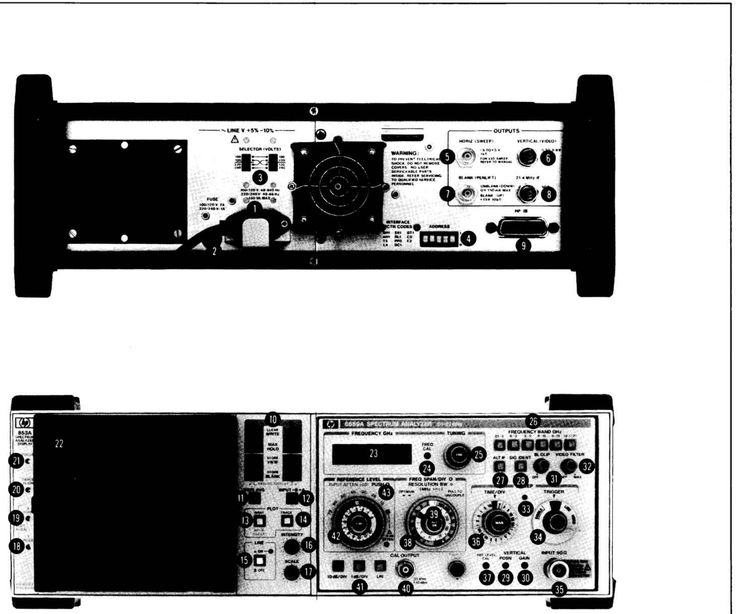

FIGURE 3-1. HP 8559A/853A CONTROLS, CONNECTORS, AND INDICATORS

SECTION IV
PERFORMANCE TESTS

4-1. INTRODUCTION

4-2. The procedures in this section test the electrical performance of the instrument using the specifications in Section I as the performance standards. The performance tests included in this section are listed in Table 4-1. Most of the tests can be performed without access to the interior of the instrument. If a test measurement is marginal, perform the appropriate adjustment procedures in Section V.

TABLE 4-1. PERFORMANCE TESTS

Paragraph	Test
4-11	Frequency Span Accuracy
4-12	Tuning Accuracy
4-13	Residual FM
4-14	Noise Sidebands
4-15	Resolution Bandwidth Accuracy
4-16	Resolution Bandwidth Selectivity
4-17	Average Noise Level
4-18	Residual Responses
4-19	Frequency Response
4-20	Gain Compression
4-21	Bandwidth Switching (Amplitude Variation)
4-22	Input Attenuator Accuracy
4-23	Reference Level Accuracy
4-24	Sweep Time Accuracy
4-25	Calibrator Output Accuracy
4-26	Display Fidelity

4-3. INSTRUMENTS TESTED

4-4. Since a compatible display mainframe is required for operation of the HP Model 8559A Spectrum Analyzer plug-in, the specifications listed in Table 1-1 apply when both instruments are functioning together. Consequently, the performance tests in this section verify the proper operation of both the HP 8559A and the display mainframe.

4-5. EQUIPMENT REQUIRED

4-6. The equipment required for the performance tests is listed under Recommended Test Equipment in Section I. Any equipment that satisfies the critical specifications given in the table may be substituted for the recommended model.

4-7. TEST RECORD

4-8. Results of the performance tests may be tabulated in the Performance Test Record at the end of this section. The test record lists test specifications and acceptable limits.

4-9. CALIBRATION CYCLE

4-10. This instrument requires periodic calibration. Calibration should be verified every six months by means of the performance tests.

PERFORMANCE TESTS

NOTE

Perform the Front Panel Adjustment Procedure in Section III before proceeding with performance tests. Allow at least 30 minutes warmup time.

4-11. FREQUENCY SPAN ACCURACY

SPECIFICATION:

There are 14 calibrated spans ranging from 10 kHz per division to 200 MHz per division in a 1, 2, 5 sequence. Frequency error between any two points on the display is within ±5 percent of the indicated frequency separation.

DESCRIPTION:

Wide span widths are checked using the 100-, 10-, and 1-MHz outputs of a comb generator. Narrow span widths are checked using the output of a comb generator modulated by a function generator. Since the comb generator produces frequency components separated by a precisely determined frequency interval, the resultant spectral lines displayed on the CRT are evenly spaced when no span error exists in the instrument. Thus, span error is the cumulative variation of distance among the spectral line intervals displayed across the CRT. The amount of span error is determined by comparing the distance of the first nine graticule divisions with the displayed distance of the corresponding spectral line intervals.

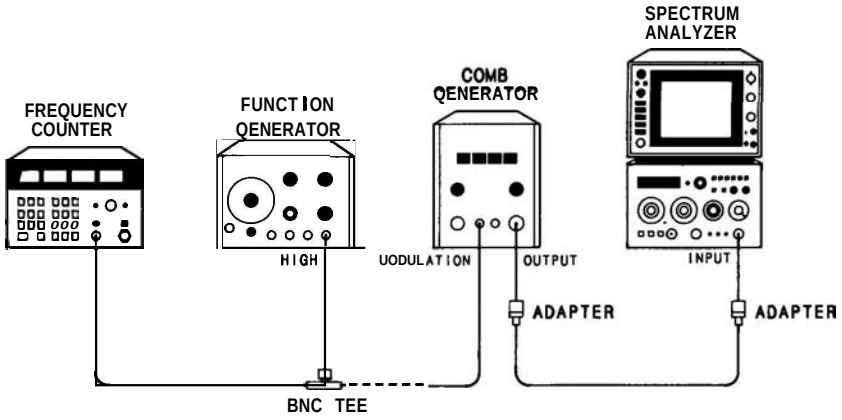

FIGURE 4-1. FREQUENCY SPAN ACCURACY TEST SETUP

EQUIPMENT:

Comb Generator	HP 8406A
Frequency Counter	HP 5342A, Opt. 005
Function Generator	HP 3310A
BNC Tee	HP 1250-0781
Adapter, Type N (m) to BNC (f) (2 required)	HP 1250-0780

PERFORMANCE TESTS

4-11. FREQUENCY SPAN ACCURACY (Cont'd)

PROCEDURE:

1. Set equipment controls as follows:

Spectrum Analyzer:

FREQUENCY BAND GHz	.01 – 3
TUNING	1.5 GHz
FREQ SPAN/DIV	200 MHz
RESOLUTION BW	OPTIMUM, coupled (pushed in)
INPUTATTEN	0 dB
REFERENCELEVEL	– 10 dB
REFLEVELFINE	0
Amplitude Scale	10 dB/DIV
SWEEP TIME/DIV	AUTO
SWEEPTRIGGER	FREE RUN
ALTIF	OFF
SIG IDENT	OFF
BLCLIP	OFF
VIDEOFILTER	OFF

Comb Generator:

COMB FREQUENCY – MHz	100 MC
INTERPOLATION AMPLITUDE – 1 MHz	OFF
OUTPUTAMPLITUDE	10 o'clock

Function Generator:

FUNCTION	SINE
RANGE	10K
Frequency	200 kHz
DCOFFSETLEVEL	0

2. Connect equipment as shown in Figure 4-1 but do not connect function generator to comb generator.

PERFORMANCE TESTS

4-11. FREQUENCY SPAN ACCURACY (Cont'd)

3. Adjust spectrum analyzer TUNING control to position one spectral line (from comb generator) at first graticule line (left-hand edge of display). Measure the error between 17th spectral line and 9th graticule line as shown in Figure 4-2. Error should be no greater than ±0.4 division.

_____ div

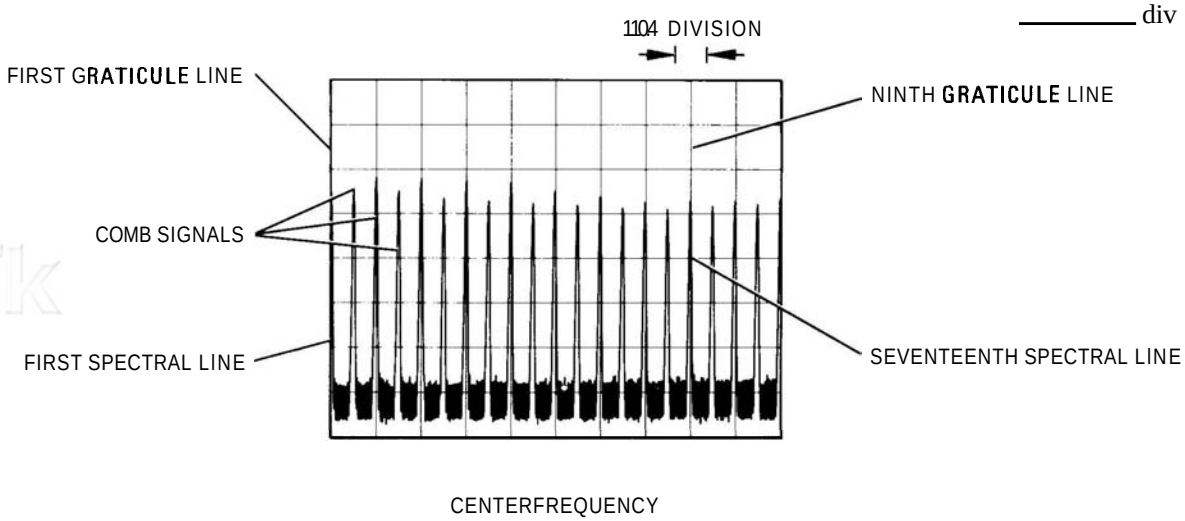

FIGURE 4-2. FREQUENCY SPAN ACCURACY MEASUREMENT FOR SEVENTEENTH SPECTRAL LINE

4. Set FREQ SPAN/DIV to 100 MHz. Adjust TUNING control to position one spectral line on the first graticule line. Measure the error between ninth spectral line and ninth graticule line. Error should be no greater than ±0.4 division.

_____ div

5. Set FREQ SPAN/DIV to 50 MHz. Adjust TUNING control to position one spectral line on the first graticule line. Measure the error between fifth spectral line and ninth graticule line. Error should be no greater than ±0.4 division.

_____ div

6. Set comb generator COMB FREQUENCY – MHz for 10-MHz comb. Set spectrum analyzer FREQ SPAN/DIV to 20 MHz. Adjust TUNING control to position one spectral line on the first graticule line. Measure the error between 17th spectral line and ninth graticule line as shown in Figure **4-3.** Error should be no greater than ±0.4 division.

_____ div

7. Set FREQ SPAN/DIV to 10 MHz. Adjust TUNING control to position one spectral line on the first graticule line. Measure the error between ninth spectral line and ninth graticule line. Error should be no greater than ±0.4 division.

_____ div

PERFORMANCE TESTS

4-11. FREQUENCY SPAN ACCURACY (Cont'd)

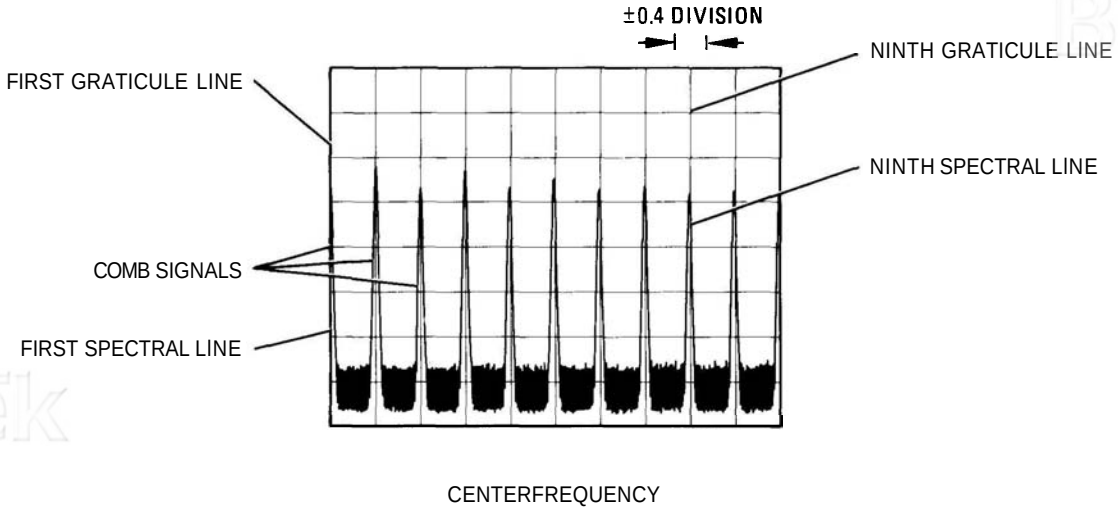

FIGURE 4-3. FREQUENCY SPAN ACCURACY MEASUREMENT FOR NINTH SPECTRAL LINE

8. Set FREQ SPAN/DIV to 5 MHz. Adjust TUNING control to position one spectral line on the first graticule line. Measure the error between fifth spectral line and ninth graticule line. Error should be no greater than ±0.4 division.

_____ div

9. Set comb generator COMB FREQUENCY – MHz for 1-MHz comb and increase OUTPUT AMPLITUDE control to maximum setting. Set spectrum analyzer FREQ SPAN/DIV to 2 MHz. Adjust TUNING control to position one spectral line on the first graticule line. Measure the error between 17th spectral line and ninth graticule line. Error should be no greater than ±0.4 division.

_____ div

10. Set FREQ SPAN/DIV to I MHz. Adjust TUNING control to position one spectral line at first graticule line. Measure the error between ninth spectral line and ninth graticule line. Error should be no greater than ±0.4 division.

_____ div

11. Set FREQ SPAN/DIV to 500 kHz. Adjust TUNING control to position one spectral line on the first graticule line. Measure the error between fifth spectral line and ninth graticule line. Error should be no greater than ±0.4 division.

_____ div

12. Set comb generator COMB FREQUENCY – MHz for 10-MHz comb. Adjust spectrum analyzer TUNING to position an in-band spectral line on the center graticule line (use SIG IDENT if necessary).

PERFORMANCE TESTS

4-11. FREQUENCY SPAN ACCURACY (Cont'd)

13. Set function generator frequency to 200 kHz (±0.5%) using frequency counter. Connect function generator output to comb generator MODULATION input. Set function generator OUTPUT LEVEL for a clean 200-kHz comb on the spectrum analyzer display.

NOTE

To obtain a clean comb on the spectrum analyzer display, use either the LOW or HIGH output of the function generator and readjust the OUTPUT LEVEL control as necessary.

14. Set spectrum analyzer FREQ SPAN/DIV to 200 kHz. Adjust TUNING control to position one spectral line on the first graticule line. Measure the error between ninth spectral line and ninth graticule line. Error should be no greater than ±0.4 division.

_____ div

15. Using the procedure of NOTE in step 13, vary spectrum analyzer FREQ SPAN/DIV and function generator output frequency in accordance with Table 4-2. Adjust spectrum analyzer TUNING control to position one spectral line on the first graticule line. Measure the span error between ninth spectral line and ninth graticule line.

NOTE

Disconnect function generator from comb generator when setting frequency with frequency counter. Increase spectrum analyzer REFERENCE LEVEL control setting as necessary for the lowest frequencies.

TABLE 4-2. NARROW SPAN WIDTH ERROR MEASUREMENT

Spectrum Analyzer		Function Generator Output Frequency*	Span Width Error	
FREQ SPAN/DIV	RESOLUTION BW		Maximum	Actual
100 kHz	OPTIMUM	100 kHz	k0.4 div.	____ div.
50 kHz	OPTIMUM	50 kHz	±0.4 div.	____ div.
20 kHz	OPTIMUM	20 kHz	±0.4 div.	____ div.
10 kHz	OPTIMUM	10 kHz	k0.4 div.	____ div.

*Check function generator output frequency using a frequency counter. Frequency readout should be within ±0.5% of desired audio frequency.

PERFORMANCE TESTS

4-12. TUNING ACCURACY

SPECIFICATION:

0.1 – 3.0 GHz: ±(1 MHz + 0.3% of center frequency)
3.0 – 21.0 GHz: ±(5 MHz + 0.2% of center frequency)

DESCRIPTION:

An external RF source is used to provide a frequency-calibrated input signal to the spectrum analyzer for three points on each frequency band. The digital FREQUENCY GHz readout is compared with the known test frequency to find the amount of readout (or tuning) error. The 10 dB attenuator is necessary to reduce LO emission from the spectrum analyzer to the frequency counter when using the sweep oscillator.

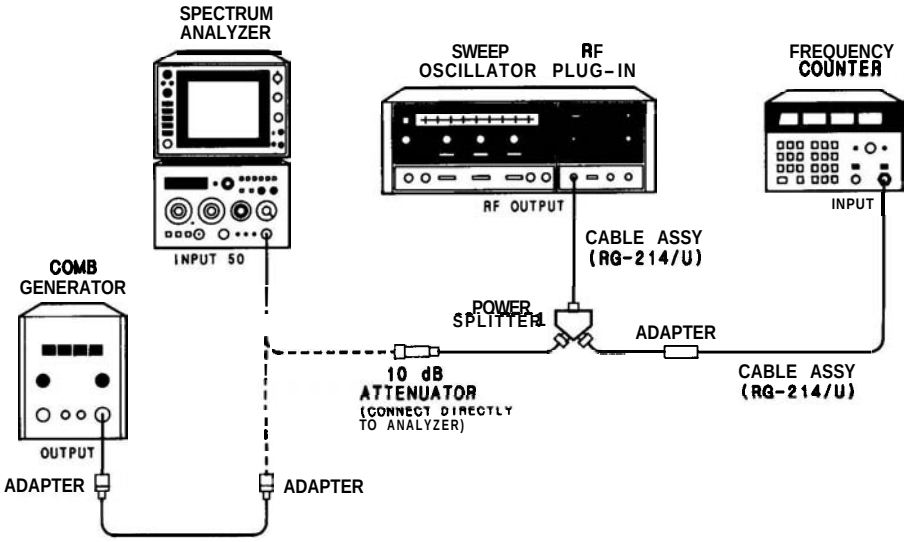

FIGURE 4-4. TUNING ACCURACY TEST SETUP

NOTE

The HP 8350A Sweep Oscillator may be substituted for the HP 8620C in this procedure.

EQUIPMENT

Comb Generator	HP 8406A
Sweep Oscillator	HP 8620C
RF Plug-In	HP 86290B, Opt. H08
Frequency Counter	HP 5342A, Opt. 005
Power Splitter	HP 11667A-C16
10-dB Attenuator	HP 8491B, Opt. 010
Cable Assembly, RG-214/U, with Type N Connectors (2 required)	HP 11500A
Adapter, Type N (f) to N (f)	HP 1250-1472
Adapter, Type N (m) to BNC (f) (2 required)	HP 1250-0780

PERFORMANCE TESTS

4-12. TUNING ACCURACY (Cont'd)

PROCEDURE:

1. Set spectrum analyzer controls as follows:

FREQUENCY BAND GHz	.01 – 3
TUNING	0.035 GHz
FREQ SPAN/DIV	200 kHz
RESOLUTION BW	OPTIMUM, coupled (pushed in)
INPUT ATTEN	10 dB
REFERENCE LEVEL	– 10 dBm
REFLEVELFINE	0
Amplitude Scale	10 dB/DIV
SWEEP TIME/DIV	AUTO
SWEEPTRIGGER	FREE RUN
ALTIF	OFF
SIG IDENT	OFF
BLCLIP	OFF
VIDEOFILTER	OFF

2. Connect CAL OUTPUT signal of spectrum analyzer to INPUT 50Ω. Adjust TUNING control to position signal at center graticule line of display. Adjust FREQ CAL potentiometer for a FREQUENCY GHz display of 0.035.

3. Connect comb generator to spectrum analyzer INPUT 50Ω as shown in Figure 4-4.

4. Set comb generator controls as follows:

COMB GENERATOR – MHz	10 MC
INTERPOLATION AMPLITUDE – 1 MHz	OFF
OUTPUT AMPLITUDE	Full clockwise

5. Adjust spectrum analyzer TUNING control to center 10-MHz comb tooth. FREQUENCY GHz readout should indicate:

Min.	Actual	Max.
0.09	_____	0.011

6. Set comb generator COMB FREQUENCY – MHz for 100 MHz comb. Set spectrum analyzer FREQ SPAN/DIV to 1 MHz, and adjust TUNING control to position 1.5-GHz comb tooth at center graticule line of display. FREQUENCY GHz readout should indicate:

Min.	Actual	Max.
1.94	_____	1.506

7. Connect sweep oscillator to spectrum analyzer INPUT 50Ω as shown in Figure 4-4.

PERFORMANCE TESTS

4-12. TUNING ACCURACY (Cont'd)

NOTE

The 10 dB attenuator should be connected directly to the INPUT 50Ω of the spectrum analyzer and the 11667A power splitter (no cable assembly should be used between attenuator and analyzer or power splitter).

8. Adjust sweep oscillator for CW output at 3.000 GHz, as measured by frequency counter. Vary POWER LEVEL control as required for accurate measurement. Adjust spectrum analyzer TUNING control to center signal on display. FREQUENCY GHz readout should indicate:

Min.	Actual	Max.
2.90	_____	3.010

9. Using procedure of step 8, check spectrum analyzer tuning accuracy at remaining frequencies listed in Table 4-3. Indication on FREQUENCY GHz readout must fall within corresponding test limits at each frequency.

NOTE

Use SIG IDENT to verify that spectrum analyzer is tuned to desired in-band signal response whenever tuning error appears excessive.

TABLE 4-3 TUNING ACCURACY MEASUREMENT

Spectrum Analyzer	RF Source	FREQUENCY GHz READOUT		
FREQUENCY BAND (GHz)*	Frequency (GHz)**	Minimum (GHz)	Actual (GHz)	Maximum (GHz)
0.01–3	0.01	0.009	_____	0.011
	1.5	1.494	_____	1.506
	3.0	2.990	_____	3.010
6–9	6.1	6.083	_____	6.117
	7.5	7.480	_____	7.520
	9.0	8.977	_____	9.023
3–9	3.1	3.089	_____	3.110
	6.0	5.983	_____	6.017
	9.0	8.977	_____	9.023
9–15	9.1	9.077	_____	9.123
	12.0	11.971	_____	12.029
	15.0	14.965	_____	15.035
6–15	6.1	6.083	_____	6.117
	10.5	10.474	_____	10.526
	15.0	14.965	_____	15.035
12.1–21	12.1	12.071	_____	12.129
	17.0	16.961	_____	17.039
	21.0	20.953	_____	21.047

*nominal band limits
**frequency set to within ±0.05%

PERFORMANCE TESTS

4-13. RESIDUAL FM

SPECIFICATION:

Less than 2 kHz peak-to-peak for a time interval ≤0.1 second; less than 2 kHz peak-to-peak in a 180-series display mainframe with 220/240 line voltage.

DESCRIPTION:

This test measures the inherent short-term instability (residual FM) of the LO system in the spectrum analyzer. A stable signal (supplied by a comb generator) is applied to the spectrum analyzer input and slope-detected with the linear portion of the 10-kHz bandwidth filter in zero span (fixed-tuned receiver – see Figure 4-6). Variations of the spectrum analyzer's LO frequency (residual FM) can be measured as an amplitude shift on the CRT display (1 kHz ≈ 0.7 major division with LIN Amplitude Scale).

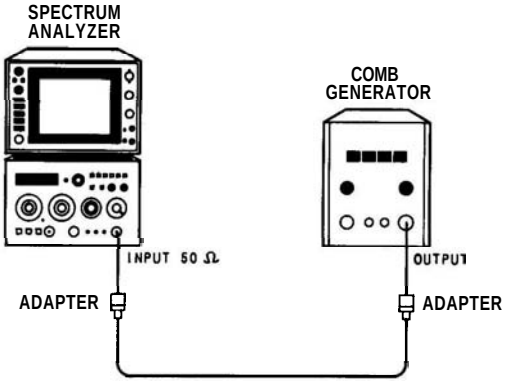

FIGURE 4-5. RESIDUAL FM TEST SETUP

EQUIPMENT:

Comb Generator	HP 8406A
Adapter, Type N (m) to BNC (f) (2 required)	HP 1250-0780

PROCEDURE:

1. Set equipment controls as follows:

Spectrum Analyzer:

FREQUENCY BAND GHz	.01 – 3
TUNING	3.000 GHz
FREQUENCY SPAN/DIV	100 kHz
RESOLUTIONBW	10 kHz
INPUT ATTEN	30 dB
REFERENCELEVEL	– 20 dBm
REFLEVELFINE	0
Amplitude Scale	LIN
SWEEP TIME/DIV	AUTO
SWEEPTRIGGER	FREE RUN
ALTIF	OFF
SIGIDENT	OFF
BLCLIP	OFF
VIDEOFILTER	OFF

PERFORMANCE TESTS

4-13. RESIDUAL FM (Cont'd)

Comb Generator:

COMB FREQUENCY – MHz ..... 100 MC
INTERPOLATION AMPLITUDE – 1 MHz ..... OFF
OUTPUT AMPLITUDE ..... Full clockwise

2. Connect OUTPUT of comb generator to spectrum analyzer INPUT 50Ω as shown in Figure 4-5.

NOTE

The 8559A is sensitive to vibration. Be sure spectrum analyzer is in a vibration-free environment.

3. Adjust spectrum analyzer TUNING control to display 3.0 GHz signal produced by comb generator. Adjust REFERENCE LEVEL and REF LEVEL FINE controls to position peak of signal at top graticule line.

4. Keep 3.0 GHz signal centered on CRT with TUNING control while reducing FREQ SPAN/DIV to zero.

5. Set RESOLUTION BW to 10 kHz and SWEEP TIME/DIV to 0.1 sec.

6. Slightly readjust spectrum analyzer FINE TUNING control until trace appears between fourth and seventh graticule lines. Peak-to-peak variation of trace should not exceed 1.4 vertical division for each horizontal division (see Figure 4-7).

_____ div

NOTE

For 2201240 line voltages, peak-to-peak variation of trace should not exceed 1.4 vertical divisions (2 kHz) in a 180-series display mainframe.

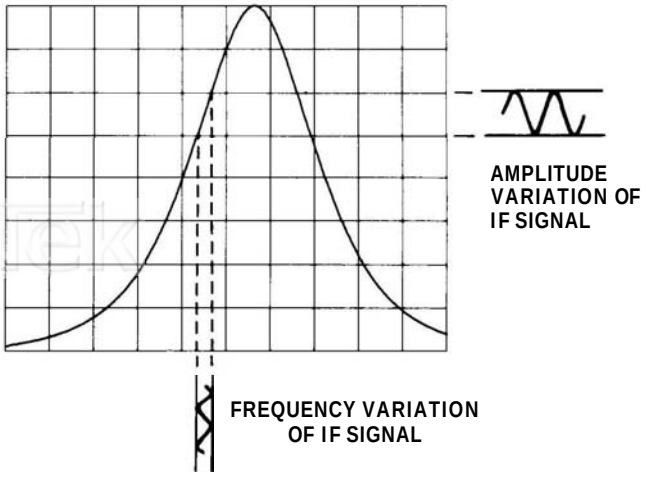

FIGURE 4-6. RESIDUAL FM TO AM CONVERSION DISPLAY

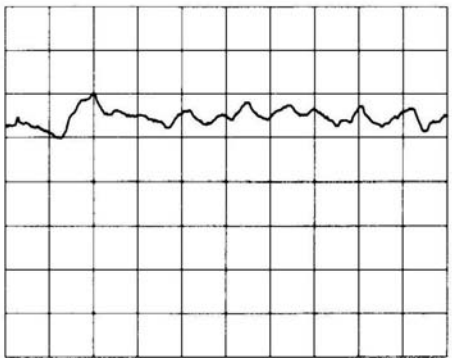

FIGURE 4-7. RESIDUAL FM DISPLAY

PERFORMANCE TESTS

4-14. NOISE SIDEBANDS

SPECIFICATION:

Noise sidebands are at least 70 dB below a CW signal, 30 kHz or more away from the signal with a 1 kHz resolution bandwidth and full video filtering.

DESCRIPTION:

A stable 1.8 GHz CW signal is applied at a –20 dBm level to the spectrum analyzer and displayed on the CRT. The amplitudes of noise-associated sidebands and unwanted responses near the signal are measured.

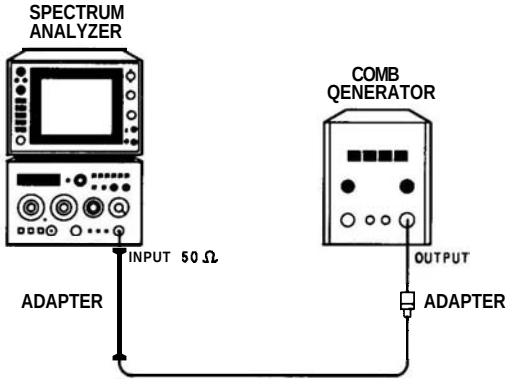

FIGURE 4-8. NOISE SIDEBANDS TEST SETUP

EQUIPMENT:

Comb Generator	HP 8406A
Adapter, Type N (m) to BNC (f) (2 required)	HP 1250-0780

PROCEDURE:

1. Set equipment controls as follows:

Spectrum Analyzer:

FREQUENCY BAND GHz	.01 – 3
TUNING	1.8 GHz
FREQ SPAN/DIV	1 MHz
RESOLUTION BW	30 kHz, uncoupled
INPUT ATTEN	0 dB
REFERENCELEVEL	–20 dBm
REFLEVELFINE	0
Amplitude Scale	10 dB/DIV
SWEEP TIME/DIV	AUTO
SWEEPTRIGGER	FREE RUN
ALTIF	OFF
SIG IDENT	OFF
BLCLIP	OFF
VIDEOFILTER	OFF

PERFORMANCE TESTS

4-14. NOISE SIDEBANDS (Cont'd)

Comb Generator:

COMB FREQUENCY – MHz ..... 100 MC
INTERPOLATION AMPLITUDE – 1 MHz ..... OFF
OUTPUT AMPLITUDE ..... Full clockwise

2. Connect equipment as shown in Figure 4-8.

3. Adjust TUNING control to locate 1.8-GHz comb tooth on CRT.

4. Adjust REFERENCE LEVEL and REF LEVEL FINE controls to position peak of 1.8-GHz signal at top graticule line.

5. Decrease FREQ SPAN/DIV to 20 kHz and RESOLUTION BW to 1 kHz. Adjust TUNING as necessary to keep signal centered.

6. Position signal at center of display. Set VIDEO FILTER control fully clockwise (not in MAX detent position). Measure noise sidebands existing more than 1.5 divisions (30 kHz) from 1.8-GHz signal. Noise sidebands should be more than 70 dB (7 divisions) down from top graticule line.

_____ div. down

PERFORMANCE TESTS

4-15. RESOLUTION BANDWIDTH ACCURACY

SPECIFICATION:

Individual resolution bandwidth 3-dB points are calibrated to ±15% (±30% for 3 MHz bandwidth).

DESCRIPTION:

Resolution bandwidth accuracy is measured in the linear mode to eliminate log amplifier errors. Since signal level at the 3-dB points (half-power points) is related to peak signal level by a voltage ratio of 0.707:1.0, a peak level of 7.1 vertical divisions on the spectrum analyzer display gives a half-power level of 5 vertical divisions:

$$0.707 \text{ (voltage ratio)} = X \text{ div}/7.1 \text{ div}$$

$$X \text{ div} = (7.1)(0.707)$$

$$\approx 5 \text{ div}$$

In the 30-, 10-, 3-, and 1-kHz bandwidths, a 21.4 MHz signal (final IF) is injected directly into Bandwidth Filter No. 1 Assembly A11 to provide the stability required for measurement of narrow resolution bandwidths.

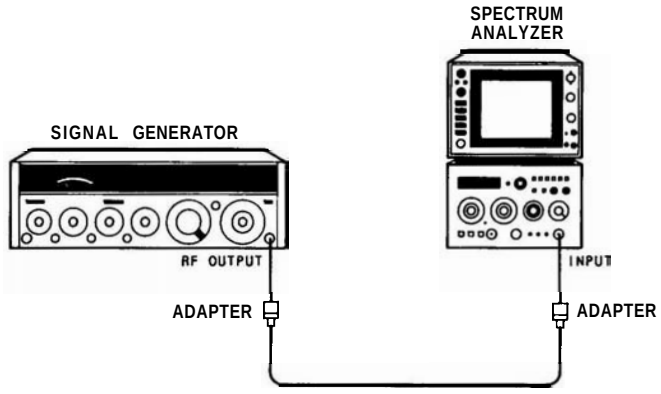

FIGURE 4-9. RESOLUTION BANDWIDTH ACCURACY TEST SETUP, 3 MHz TO 100 kHz

EQUIPMENT:

Signal Generator	HP 8640B
Extender Cable Assembly	HP 5060-0303
Adapter, Type N (m) to BNC (f) (2 required)	HP 1250-0780
Adapter, Type SMB (f) to BNC (f)	HP 1250-1236

PERFORMANCE TESTS

4-15. RESOLUTION BANDWIDTH ACCURACY (Cont'd)

PROCEDURE:

WARNING

Part of this test must be performed with power supplied to the instrument and with protective covers removed. The test should be performed only by sewice-trained personnel who are aware of the hazards involved.

1. Set equipment controls as follows:

Spectrum Analyzer:

FREQUENCY BAND GHz	.01 – 3
TUNING	0.035 GHz
FREQ SPAN/DIV	0
RESOLUTIONBW	3 MHz
INPUTATTEN	10 dB
REFERENCELEVEL	0 dBm
REFLEVELFINE	0
Amplitude Scale	LIN
SWEEP TIME/DIV	AUTO
SWEEPTRIGGER	FREE RUN
ALTIF	OFF
SIG IDENT	OFF
BLCLIP	OFF
VIDEOFILTER	OFF

Signal Generator:

COUNTERMODE	INT, EXPAND X10
AM	OFF
FM	OFF
FREQUENCYTUNE	35 MHz
RF	ON
OUTPUTLEVEL	0 dBm

2. Connect equipment as shown in Figure 4-9.

3. Adjust spectrum analyzer TUNING control to locate peak of 35-MHz signal on CRT. Reduce signal generator output if necessary.

NOTE

If necessary, select 10 **dB/DIV** to locate signal, then switch to LIN.

4. Adjust signal generator OUTPUT LEVEL to position trace at 7.1 divisions above graticule baseline.

PERFORMANCE TESTS

4-15. RESOLUTION BANDWIDTH ACCURACY (Cont'd)

5. Tune signal generator frequency until trace drops to 5 divisions above graticule baseline. Record signal generator frequency.

_____ MHz

6. Tune signal generator frequency in direction opposite to that of step 5 until trace peaks (7.1 divisions above graticule baseline) and then drops to 5 divisions above graticule baseline. Record signal generator frequency.

_____ **MHz**

NOTE

The bandwidths recorded in this performance test are required for calculations in 4-16 Resolution Bandwidth Selectivity performance test.

7. Calculate and record resolution bandwidth at 3-dB points (difference between frequencies recorded in steps 5 and 6).

Min.	Actual	Max.
2.0	_____	3.90 MHz

8. Select ALT IF (switch pushed in), leaving FREQ SPAN/DIV set to 0. Set signal generator to 35 MHz and repeat steps 3 through 7.

Min.	Actual	Max.
2.0	_____	3.90 MHz

9. Return ALT IF switch to OFF position. Set RESOLUTION BW to 1 MHz, leaving FREQ SPAN/DIV set to 0. Set signal generator to 35 MHz and repeat steps 3 through 7.

Min.	Actual	Max.
850	_____	1150 kHz

10. Set RESOLUTION BW to 300 kHz, leaving FREQ SPAN/DIV set to 0. Set signal generator to 35 MHz and repeat steps 3 through 7.

Min.	Actual	Max.
255	_____	345 kHz

11. Set RESOLUTION BW to 100 kHz, leaving FREQ SPAN/DIV set to 0. Set signal generator to 35 MHz and repeat steps 3 through 7.

Min.	Actual	Max.
85	_____	115 kHz

PERFORMANCE TESTS

4-15. RESOLUTION BANDWIDTH ACCURACY (Cont'd)

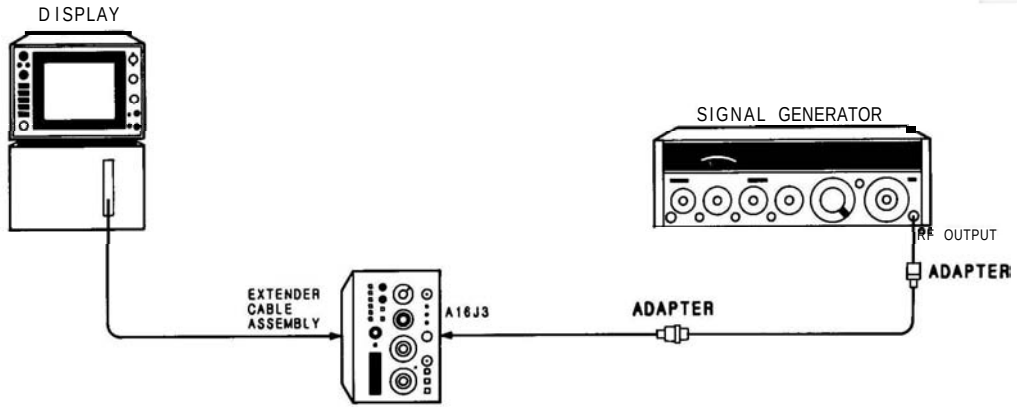

FIGURE 4-10. RESOLUTION BANDWIDTH ACCURACY TEST SETUP, 30 kHz TO 1 kHz

WARNING

In the following procedure, the plug-in must be removed from the display mainframe and connected through the extender cable assembly. Be very careful; the energy at some points in the instrument will, if contacted, cause personal injury. This test should be performed only by a skilled person who knows the hazard involved.

12. Set equipment controls as follows:

Spectrum Analyzer:

FREQUENCY BAND GHz	.01 – 3
TUNING	>0.010 GHz
FREQ SPAN/DIV	0 kHz
RESOLUTIONBW	30 kHz
INPUT ATTEN	10 dB
REFERENCELEVEL	0 dBm
REFLEVELFINE	0
Amplitude Scale	LIN
SWEEP TIME/DIV	AUTO
SWEEPTRIGGER	FREE RUN
ALTIF	OFF
SIG IDENT	OFF
BLCLIP	OFF
VIDEOFILTER	OFF

PERFORMANCE TESTS

4-15. RESOLUTION BANDWIDTH ACCURACY (Cont'd)

Signal Generator:

COUNTERMODE	INT, EXPAND X10
AM	OFF
FM	OFF
FREQUENCYTUNE	21.4 MHz
RF	ON
OUTPUTLEVEL	≈ –3 dBm

13. Connect equipment as shown in Figure 4-10.

NOTE

For early instruments that do not feature **A16J3,** a 21.4-MHz signal can be injected directly into the 300-MHz output **(A10J1)** of Third Converter Assembly **A10.** Set the signal generator OUTPUT LEVEL to **0 dBm** and use the spectrum analyzer REFERENCE LEVEL and REF LEVEL **FINE** controls in step 14 (≈ – 40 **dBm)** to position the trace at 7.1 divisions above the graticule baseline.

14. Adjust signal generator frequency until spectrum analyzer trace is at peak. Set signal generator OUTPUT LEVEL to position trace at 7.1 divisions above graticule baseline. Set COUNTER MODE to EXPAND **X100** (most significant digit will overflow).

15. Tune signal generator frequency until trace drops to 5 divisions above graticule baseline. Record signal generator frequency.

_____ MHz

16. Tune signal generator frequency in direction opposite to that of step 15 until trace peaks (7.1 divisions above graticule baseline) and then drops to 5 divisions above graticule baseline. Record signal generator frequency.

_____ MHz

17. Calculate and record resolution bandwidth at 3-dB points (difference between frequencies recorded in steps 15 and 16).

Min.	Actual	Max.
25.0 kHz	_____	34.50 kHz

18. Set RESOLUTION BW to 10 kHz, leaving FREQ **SPAN/DIV** set to 0. Repeat steps 14 through 17.

Min.	Actual	Max.
8.0 kHz	_____	11.50 kHz

PERFORMANCE TESTS

4-15. RESOLUTION BANDWIDTH ACCURACY (Cont'd)

19. Set RESOLUTION BW to 3 **kHz,** leaving FREQ SPAN/DIV set to 0. Repeat steps 14 through 17.

Min.	Actual	Max.
2.5 **kHz**	_____	3.45 **kHz**

20. Set RESOLUTION BW to 1 **kHz,** leaving FREQ SPAN/DIV set to 0. Repeat steps 14 through 17.

Min.	Actual	Max.
0.5 **kHz**	_____	1.15 **kHz**

21. Leave signal generator connected to A16J3 if continuing on with next performance test.

PERFORMANCE TESTS

4-16. RESOLUTION BANDWIDTH SELECTIVITY

SPECIFICATION:

60-dB/3-dB resolution bandwidth ratio: <15:1

DESCRIPTION:

The 60-dB bandwidth is measured for all resolution bandwidths. The 60- to 3-dB resolution bandwidth ratio (shape factor) is then computed for each bandwidth by dividing the 3-dB value (from the Resolution Bandwidth Accuracy test) into the 60-dB value.

In the 30-, 10-, 3-, and 1-kHz bandwidths, a 21.4-MHz signal (final IF) is injected into Bandwidth Filter No. 1 Assembly A11 to provide the stability required for the measurement of narrow resolution bandwidths.

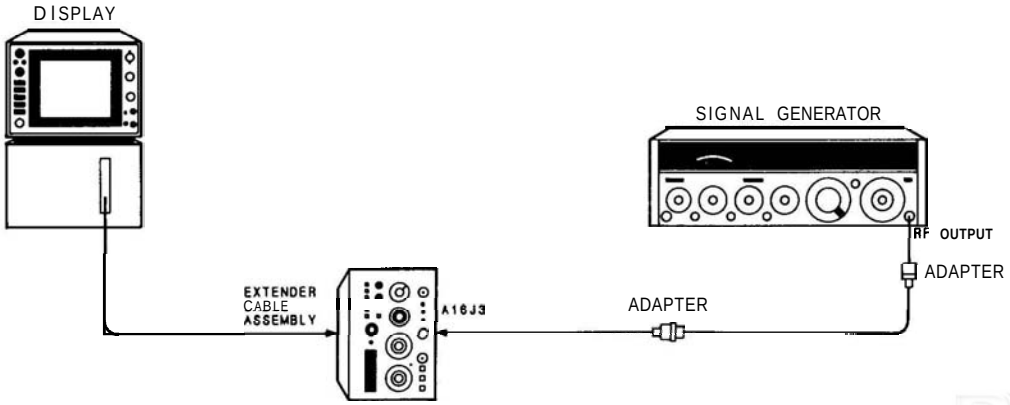

FIGURE 4-11. RESOLUTION BANDWIDTH SELECTIVITY TEST SETUP, 1 kHz TO 30 kHz

WARNING

In the following procedure, the plug-in must be removed from the display mainframe and connected through the extender cable assembly. Be very careful; the energy at some points in the instrument will, if contacted, cause personal injury. This test should be performed only by a skilled person who knows the hazard involved.

EQUIPMENT:

Signal Generator	HP 8640B
Extender Cable Assembly	HP 5060-0303
Adapter, SMB **(f)** to BNC **(f)**	HP 1250-1236
Adapter, Type N (m) to BNC **(f)** (2 required)	HP 1250-0780

PERFORMANCE TESTS

4-16. RESOLUTION BANDWIDTH SELECTIVITY (Cont'd)

PROCEDURE:

1. Set equipment controls as follows:

Spectrum Analyzer:

FREQUENCY BAND GHz	.01 – 3
TUNING	>0.010 GHz
FREQ SPAN/DIV	0
RESOLUTIONBW	1 kHz
INPUTATTEN	10 dB
REFERENCELEVEL	0 dBm
REFLEVELFINE	0
Amplitude Scale	10 dB/DIV
SWEEP TIME/DIV	AUTO
SWEEPTRIGGER	FREE RUN
ALTIF	OFF
SIGIDENT	OFF
BLCLIP	OFF
VIDEO FILTER	12 o'clock

Signal Generator:

COUNTERMODE	INT, EXPAND X10
AM	OFF
FM	OFF
FREQUENCYTUNE	21.4 MHz
RF	ON
OUTPUTLEVEL	≈ – 3 dBm

2. Connect equipment as shown in Figure 4-11.

NOTE

For early instruments that do not feature A16J3, a 321.4 MHz, – 25 dBm signal can be injected directly into the input of Third Converter Assembly A10 at blue cable A10W1. Set signal generator COUNTER MODE to EXPAND X100 (most significant digit will overflow).

3. Adjust signal generator frequency until spectrum analyzer trace is at peak. Put signal generator OUTPUT LEVEL to position trace at top graticule line.

4. Tune signal generator until trace drops to 2 divisions above graticule baseline. Record signal generator frequency.

_____ MHz

PERFORMANCE TESTS

4-16. RESOLUTION BANDWIDTH SELECTIVITY (Cont'd)

5. Tune signal generator in direction opposite to that of step 4 until trace peaks (top graticule line) and then drops to 2 divisions above graticule baseline. Record signal generator frequency.

_____ MHz

6. Calculate and record resolution bandwidth at 60-dB points (difference between frequencies recorded in steps 4 and 5).

_____ kHz

7. Set RESOLUTION BW to 3 kHz, leaving FREQ SPAN/DIV set to 0. Repeat steps 3 through 6.

_____ kHz

8. Set RESOLUTION BW to 10 kHz, leaving FREQ SPAN/DIV set to 0. Repeat steps 3 through 6.

_____ kHz

9. Set RESOLUTION BW to 30 kHz, leaving FREQ SPAN/DIV set to 0. Repeat steps 3 through 6.

_____ kHz

10. Disconnect signal generator from A16J3. Set the display's LINE power to OFF and remove extender cable assembly. Install plug-in in mainframe and set LINE power to ON.

11. Set equipment controls as follows:

Spectrum Analyzer:

FREQUENCY BAND GHz	.01 – 3
TUNING	0.035 GHz
FREQ SPAN/DIV	0
RESOLUTION BW	100 kHz
INPUT ATTEN	10 dB
REFERENCELEVEL	0 dBm
REFLEVELFINE	0
Amplitude Scale	10 dB/DIV
SWEEP TIME/DIV	AUTO
SWEEPTRIGGER	FREE RUN
ALTIF	OFF
SIG IDENT	OFF
BLCLIP	OFF
VIDEOFILTER	12 o'clock

PERFORMANCE TESTS

4-16. RESOLUTION BANDWIDTH SELECTIVITY (Cont'd)

Signal Generator:

COUNTERMODE ..... INT, EXPAND X10
AM ..... OFF
FM ..... OFF
FREQUENCYTUNE ..... 35 MHz
RF ..... ON
OUTPUTLEVEL ..... 0 dBm

12. Connect equipment as shown in Figure 4-12.

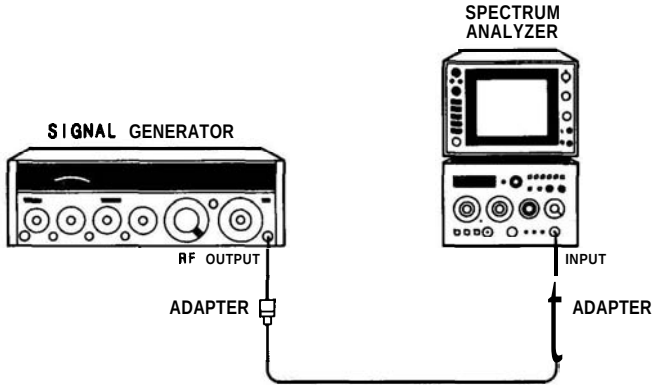

FIGURE 4-12. RESOLUTION BANDWIDTH SELECTIVITY TEST SETUP, 100 kHz TO 3 MHz

13. Adjust spectrum analyzer TUNING to locate peak of 35-MHz signal on CRT. Reduce signal generator output if necessary.

14. Adjust signal generator OUTPUT LEVEL to position trace at top graticule line.

15. Tune signal generator frequency until trace drops to 2 divisions above graticule baseline. Record signal generator frequency.

_____ MHz

16. Tune signal generator frequency in direction opposite to that of step 16 until trace peaks (top graticule line) and then drops to 2 divisions above graticule baseline. Record signal generator frequency.

_____ MHz

17. Calculate and record resolution bandwidth at 60-dB points (difference between frequencies recorded in steps 16 and 17).

_____ kHz

PERFORMANCE TESTS

4-16. RESOLUTION BANDWIDTH SELECTIVITY (Cont'd)

18. Set RESOLUTION BW to 300 kHz, leaving FREQ SPAN/DIV set to 0. Repeat steps 14 through 18.

_____ kHz

19. Set RESOLUTION BW to 1 MHz, leaving FREQ SPAN/DIV set to 0. Repeat steps 14 through 18.

_____ MHz

20. Select ALT IF (switch pushed in). Set RESOLUTION BW to 3 MHz, leaving FREQ SPAN/DIV set to 0. Repeat steps 14 through 18.

_____ MHz

21. Return ALT IF switch to OFF position. With RESOLUTION BW still in 3 MHz and FREQ SPAN/DIV set to 0, repeat steps 14 through 18.

_____ MHz

22. In Table 4-4, record 3-dB bandwidths computed in 4-15 Resolution Bandwidth Accuracy test.

23. In Table 4-4, record 60-dB bandwidths recorded in this procedure.

24. For each resolution bandwidth, divide 60-dB bandwidth by 3-dB bandwidth to obtain Resolution Bandwidth Ratio. Each ratio should be less than 15:1.

TABLE 4-4. RESOLUTION BANDWIDTH SELECTIVITY

RESOLUTION BW Setting	Actual 3 dB BW	Actual 60 dB BW	Resolution Bandwidth Ratio (60 dB/3 dB BW)
3 MHz			
3 MHz (ALT IF)			
1 MHz			
300 kHz			
100 kHz			
30 kHz			
10 kHz			
3 kHz			
1 kHz			

PERFORMANCE TESTS

4-17. AVERAGE NOISE LEVEL

SPECIFICATION:

The maximum average noise level for each frequency band, with 1 kHz resolution bandwidth and 0 dB attenuation, is given in Table 4-5.

DESCRIPTION:

The average noise level of the spectrum analyzer is checked by observing the average noise power level displayed on the CRT when no input signal is applied to the instrument.

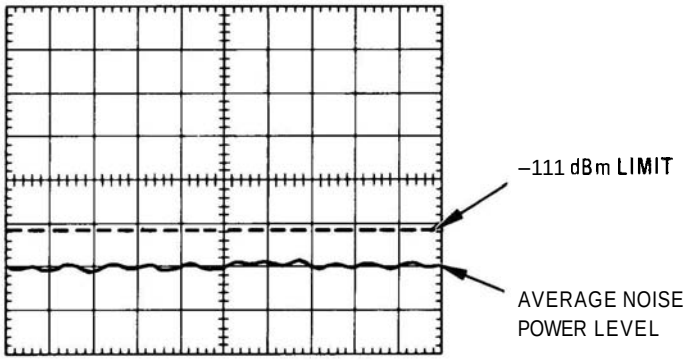

FIGURE 4-13. AVERAGE NOISE LEVEL MEASUREMENT, .01 – 3 GHz

EQUIPMENT:

Variable Persistence/Storage Display	HP 181T/TR
50Ω Termination	HP 909A, Opt. 012

NOTE

The HP 853A Spectrum Analyzer Display may be substituted for the HP **181T/TR** in this procedure.

NOTE

This test can be performed with no input termination if INPUT **ATTEN** is set to **20** dB. Note that the input attenuation must then be taken into consideration in establishing the equivalent REFERENCE LEVEL control setting for the measurement. A REFERENCE LEVEL setting of –40 **dBm** with **20** dB INPUT **ATTEN** is equivalent to a REFERENCE LEVEL setting of **–60 dBm** with **0** dB INPUT **ATTEN.**

PERFORMANCE TESTS

4-17. AVERAGE NOISE LEVEL (Cont'd)

PROCEDURE:

1. Set spectrum analyzer controls as follows:

FREQUENCY BAND GHz	.01 – 3
TUNING	0.010 GHz
FREQ SPAN/DIV	F
RESOLUTION BW	3 MHz, uncoupled
INPUT ATTEN	0 dB
REFERENCE LEVEL	– 60 dBm
REF LEVEL FINE	0
Amplitude Scale	10 dB/DIV
SWEEP TIME/DIV	AUTO
SWEEP TRIGGER	FREE RUN
ALT IF	OFF
SIG IDENT	OFF
BL CLIP	OFF
VIDEO FILTER	Full CW (not in detent)

2. With FREQ SPAN/DIV set to F, set VIDEO FILTER fully clockwise, but not in detent. Adjust TUNING to position marker at frequency where displayed average noise level is highest.

NOTE

Do not tune marker beyond specified band edge.

3. Set VIDEO FILTER to detent and FREQ SPAN/DIV to 0.
4. Set RESOLUTION BW to 1 kHz.
5. Measure average noise level displayed on CRT (see Figure 4-13) and record results in Table 4-5.
6. Set FREQUENCY BAND GHz to 6 – 9 and repeat steps 2 through 5.
7. Set FREQUENCY BAND GHz to 3 – 9 and repeat steps 2 through 5.
8. Set FREQUENCY BAND GHz to 9 – 15 and repeat steps 2 through 5.
9. Set FREQUENCY BAND GHz to 6 – 15 and repeat steps 2 through 5.
10. Set FREQUENCY BAND GHz to 12.1 – 21 and repeat steps 2 through 5 for the frequency range of 12.1 – 18.0 GHz.

PERFORMANCE TESTS

4-17. AVERAGE NOISE LEVEL (Cont'd)

NOTE

Do not tune above 18.0 GHz for this step.

11. **Repeat steps 2 through 5 for the frequency range of 18.0 – 21.0 GHz.**

12. **Repeat entire procedure with ALT IF on.**

TABLE 4-5. AVERAGE NOISE LEVEL

FREQUENCY BAND GHz Setting	Specified Frequency Range (GHz)		Average Noise Level		
	Reg. IF	ALT IF	Maximum	Actual (Reg. IF)	Actual (ALT IF)
.01–3	0.010–3.060	0.025–3.060	–111 dBm	– _____ dBm	– _____ dBm
6–9	6.035–9.060	6.020–9.060	–108 dBm	– _____ dBm	– _____ dBm
3–9	3.033–9.120	3.048–9.120	–103 dBm	– _____ dBm	– _____ dBm
9–15	9.058–15.120	9.043–15.120	–98 dBm	– _____ dBm	– _____ dBm
6–15	6.055–15.180	6.070–15.180	–93 dBm	– _____ dBm	– _____ dBm
12.1–21	12.080–18.000	12.065–18.000	–92 dBm	– _____ dBm	– _____ dBm
12.1–21	18.000–21.000	18.000–21.000	–90 dBm	– _____ dBm	– _____ dBm

PERFORMANCE TESTS

4-18. RESIDUAL RESPONSES

SPECIFICATION:

Residual responses are less than −90 dBm (0.01 – 3.06 GHz) with 0 dB input attenuation and no signal present at input. They are less than −90 dBm (0.025 – 3.06 GHz) with ALT IF selected.

DESCRIPTION:

Signals present on the display without an input signal applied to the spectrum analyzer are residual responses. The .01 – 3 GHz frequency band is checked for residual responses greater than −90 dBm.

EQUIPMENT:

Variable Persistence/Storage Display	HP 181T/TR
50Ω Termination, Type N (m)	HP 909A, Opt. 012

NOTE

The HP 853A Spectrum Analyzer Display may be substituted for the HP 181T/TR in this procedure.

NOTE

This test can be performed with no input termination if INPUT ATTEN is set to 20 dB. Note that the input attenuation must then be taken into consideration in establishing the equivalent REFERENCE LEVEL control setting for the measurement. A REFERENCE LEVEL setting of −40 dBm with 20 dB INPUT ATTEN is equivalent to a REFERENCE LEVEL setting of −60 dBm with 0 dB INPUT ATTEN.

PROCEDURE:

1. Set spectrum analyzer controls as follows:

FREQUENCY BAND GHz	.01 – 3
TUNING	0.050 GHz
FREQ SPAN/DIV	10 MHz
RESOLUTION BW	1 MHz, uncoupled
INPUT ATTEN	0 dB
REFERENCE LEVEL	−60 dBm
REFLEVEL FINE	0
Amplitude Scale	10 dB/DIV
SWEEP TIME/DIV	AUTO
SWEEP TRIGGER	FREE RUN
ALT IF	OFF
SIGIDENT	OFF
BLCLIP	OFF
VIDEO FILTER	12 o'clock

PERFORMANCE TESTS

4-18. RESIDUAL RESPONSES (Cont'd)

2. Terminate INPUT 50Ω connector with 50-ohm termination.

3. Adjust TUNING control to position LO feedthrough signal on leftmost vertical graticule line.

4. Set RESOLUTION BW control to 10 kHz, leaving FREQ SPAN/DIV set to 10 MHz. Adjust BL CLIP control clockwise until just the peaks of the noise are displayed. Set the SWEEP TRIGGER control to SINGLE and display PERSISTENCE control to MAX.

5. Set display to WRITE and momentarily press ERASE. Turn SWEEP TRIGGER control clockwise to trigger a single sweep, adjusting BL CLIP and display INTENSITY controls until just the peaks of the noise are displayed. Press ERASE and trigger another sweep.

6. Set display to VIEW and check for residual responses greater than −90 dBm. Record frequency and amplitude of residual response with the greatest amplitude.

_____ GHz

_____ dBm

NOTE

Residual responses are often visible within 10 MHz of the HP 8559A LO feedthrough signal (25 MHz with ALT IF selected). These residual responses are not within the instrument's specified frequency range and should be excluded from consideration in this performance test.

7. Increase TUNING control setting in 100-MHz increments and use procedure of steps 5 – 7 to check for residual responses from 10 MHz to 3.060 GHz (25 MHz – 3.060 GHz with ALT IF selected).

PERFORMANCE TESTS

4-19. FREQUENCY RESPONSE

SPECIFICATION:

Frequency response measured with 0 or 10 dB of input attenuation includes input attenuator flatness, mixer flatness, and band-to-band amplitude variation. Table 4-6 shows the frequency response specifications.

TABLE 4-6. FREQUENCY RESPONSE SPECIFICATIONS

FREQUENCY BAND (GHz)	Frequency Response (±dB Maximum)
.01–3	1.0
6–9	1.0
3–9	1.5
9–15	1.8
6–15	2.1
12.1–18.0	2.3
18.0–21.0	3.0

DESCRIPTION:

Frequency response is checked in each frequency band. With the spectrum analyzer set to full sweep, an RF input signal is very slowly swept across the entire frequency band. The resulting display is a series of narrow signals that vary in height across the CRT. Since the RF source is leveled and held flat across each frequency band, variations in amplitude on the display represent variations in the frequency response of the spectrum analyzer. Leveling within reasonable limits becomes difficult from 18 GHz to 21 GHz, so the RF output at the power splitter is characterized and compensated for when making the measurement of this frequency range.

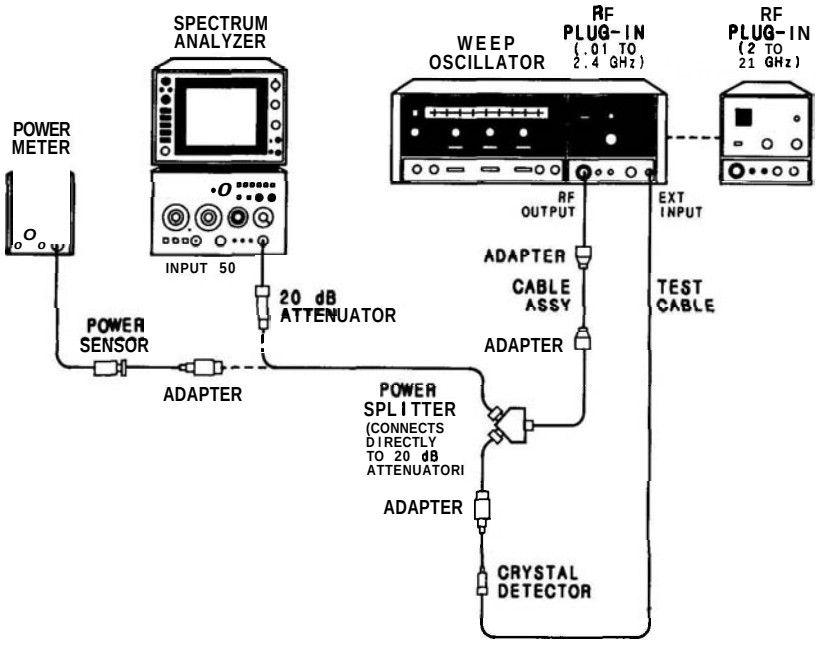

FIGURE 4-14. FREQUENCY RESPONSE TEST SETUP

PERFORMANCE TESTS

4-19. FREQUENCY RESPONSE (Cont'd)

NOTE

The HP 853A Spectrum Analyzer Display is not recommended for use in this procedure.

The HP 8350A Sweep Oscillator may be substituted for the HP 8620C in this procedure, if necessary.

EQUIPMENT:

Variable Persistence/Storage Display	HP 181T/TR
Sweep Oscillator	HP 8620C
RF Plug-in	HP 86222A
RF Plug-in	HP 86290B-H08
Power Meter	HP 435A/B
Power Sensor	HP 8485A
Power Splitter	HP 11667A, Opt. C16
Attenuator, 20-dB	HP 8491B, Opt. 020
Crystal Detector	HP 33330C
Adapter, Type N (m) to SMA (f) (2 required)	HP 1250-1250
Adapter, Type N (f) to SMA (f)	HP 1250-1745
Adapter, Type N (m) to N (m)	HP 1250-0778
Test Cable, SMC (m) to BNC (m)	HP 11592-60001
Cable Assembly, SMA (m) to SMA (m)	HP 8120-1578

PROCEDURE:

1. Set equipment controls as follows:

Spectrum Analyzer:

FREQUENCY BAND GHz	.01 – 3
TUNING	0.000 GHz
FREQ SPAN/DIV	10 MHz
RESOLUTION BW	300 kHz, coupled
INPUT ATTEN	0 dB
REFERENCELEVEL	– 20 dBm
REFLEVELFINE	– 4
Amplitude Scale	10 dB/DIV
SWEEP TIME/DIV	AUTO
SWEEPTRIGGER	FREE RUN
ALTIF	OFF
SIGIDENT	OFF
BLCLIP	OFF
VIDEO FILTER	Full CW (not in detent)

PERFORMANCE TESTS

4-19. FREQUENCY RESPONSE (Cont'd)

Sweep Oscillator:

CW Frequency	0.100 GHz
MARKERS	OFF
SWEEP MODE	AUTO (or TIME)
SWEEP TRIGGER	EXT
SWEEP-TIME-SEC	100
RF OFF-ON	OFF
ALC Switch	EXT
POWER LEVEL	Midrange
RF BLANKING (Rear Panel)	ON
FM-NORM-PL (Rear Panel)	NORM
1 kHz SQ WAVE (Rear Panel)	OFF

2. Center LO feedthrough signal on CRT with spectrum analyzer TUNING control. Adjust FREQ CAL for a FREQUENCY GHz readout of 0.000.

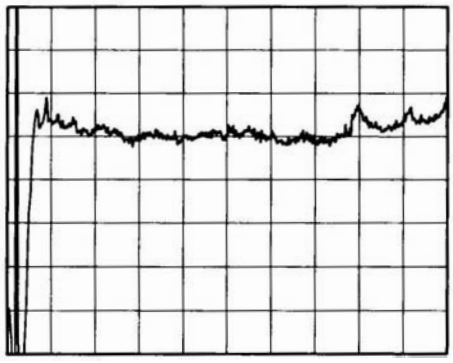

FIGURE 4-15. TYPICAL FREQUENCY RESPONSE FOR .01 TO 2.4 GHz

3. Using 0.01 – 2.4 GHz sweep oscillator plug-in, connect equipment as shown in Figure 4-14. Connect output of power splitter, through 20-dB attenuator, to spectrum analyzer input. Turn sweep oscillator RF power ON and adjust ALC GAIN control for leveled output indication.

NOTE

Use maximum possible ALC GAIN to avoid leveling errors during swept measurements.

PERFORMANCE TESTS

4-19. FREQUENCY RESPONSE (Cont'd)

4. Adjust spectrum analyzer TUNING control for a FREQUENCY GHz readout of 0.100. Set sweep oscillator to CW with frequency of 100 MHz and use CW control to center signal on spectrum analyzer display.

5. Calibrate and zero power sensor and meter. Disconnect power splitter from 20-dB attenuator and connect to power sensor. Adjust sweep oscillator POWER LEVEL control for a power meter indication of –8 dBm.

6. Connect output of power splitter through 20-dB attenuator directly (do not use cable) to spectrum analyzer input. Select Amplitude Scale setting of 1 dB/DIV, and adjust REF LEVEL FINE control as necessary to place peak of 100 MHz signal at center horizontal graticule line of spectrum analyzer display.

7. Adjust spectrum analyzer TUNING control for a FREQUENCY GHz readout of 0.060. Adjust sweep oscillator CW control for 60 MHz signal, centered on spectrum analyzer display.

8. Set sweep oscillator AF control for 100 MHz sweep. Adjust spectrum analyzer display PERSISTENCE control fully clockwise. Adjust sweep oscillator SWEEP TIME vernier for slow sweep (30 seconds or longer) and trigger a sweep. Record greatest positive and greatest negative deviation of signal peaks from center horizontal graticule line (10 MHz to 110 MHz).

Maximum _____ divisions

Minimum _____ divisions

9. Adjust spectrum analyzer TUNING control for a FREQUENCY GHz readout of 0.100. Set sweep oscillator to CW with frequency of 100 MHz and use CW control to center signal on spectrum analyzer display.

10. Set spectrum analyzer FREQ SPAN/DIV control to F (full band) and RESOLUTION BW control to 3 MHz. Adjust TUNING control fully clockwise to position tuning marker at high end of selected frequency band. Adjust REF LEVEL FINE control as necessary to place peak of 100 MHz signal (near LO feedthrough signal) at center horizontal graticule line of spectrum analyzer display.

11. Set sweep oscillator for FULL BAND (10 MHz to 2.4 GHz) and trigger a sweep. Record greatest positive and greatest negative deviation of signal peaks from center horizontal graticule line (10 MHz to 2.4 GHz). Record deviation of signal peak located at 8th vertical graticule line (approximately 2.1 GHz).

Maximum _____ divisions

Minimum _____ divisions

8th graticule line _____ divisions

12. Remove 0.01 – 2.4 GHz RF Plug-in from sweep oscillator mainframe and replace with 2 – 22 GHz RF Plug-in. Select band 4 (2.0 – 22 GHz) on HP 8620C sweep oscillator.

13. Set sweep oscillator to CW with frequency of 2.1 GHz and use CW control to position signal on 8th vertical graticule line of spectrum analyzer display. Adjust ALC GAIN control for leveled sweep oscillator output and adjust POWER LEVEL control to place signal peak at same amplitude measured in step 11.

PERFORMANCE TESTS

4-19. FREQUENCY RESPONSE (Cont'd)

NOTE

Use maximum possible ALC **GAIN** to avoid leveling errors during swept measurements.

Do not adjust spectrum analyzer REF LEVEL **FINE** control or sweep **oscillator** POWER LEVEL control during the remaining steps of this performance test.

14. Adjust spectrum analyzer TUNING control fully counterclockwise to position tuning marker at low end of selected frequency band. Set sweep oscillator CW control to 2.5 GHz and AF control for 1 GHz sweep. Trigger a sweep, and record greatest positive and greatest negative deviation of signal peaks from center horizontal graticule line (2 GHz to 3 GHz).

Maximum _____ divisions

Minimum _____ divisions

NOTE

It is normal for the HP **8559A** to exhibit baseline lift with an input signal at approximately 3.0075 GHz (2.9925 with ALT **IF** selected). Adjust sweep oscillator sweep range as necessary to avoid baseline lift during frequency response measurements.

If frequency response appears out of specification near a band edge, use a frequency counter with sweep oscillator in CW to ensure the frequency in question is within the specified band.

15. Compare values recorded in steps 8, 11, and 14, and record overall greatest positive and greatest negative deviation from center horizontal graticule line for entire .01 – 3 GHz frequency band. Frequency response (deviation from center horizontal graticule line) should not exceed ± 1.0 dB (± 1.0 division).

Maximum _____ divisions (.01 – 3 GHz)

Minimum _____ divisions (.01 – 3 GHz)

16. Calculate mean deviation for .01 – 3 GHz frequency band using maximum and minimum values recorded in step 15. (For example, a maximum of + 0.5 and a minimum of – 0.7 results in a mean deviation of – 0.1)

$$\text{Mean deviation} = \frac{\text{Maximum} + \text{Minimum}}{2} = \_\_\_\_\_ \text{ divisions}$$

PERFORMANCE TESTS

4.19. FREQUENCY RESPONSE (Cont'd)

Frequency Response, 3 – 18 GHz

NOTE

For the higher frequency bands, multiple responses may appear on spectrum analyzer display during frequency response measurement. Adjust INTENSITY control as necessary for optimum display of in-band signal peaks.

17. Select 6 – 9 GHz frequency band on spectrum analyzer. Set sweep oscillator to CW and frequency to 7.5 GHz. Use CW control to center signal on spectrum analyzer display. Set AF control for 3 GHz and trigger a sweep. Adjust spectrum analyzer TUNING control clockwise several turns to reposition tuning marker. Trigger another sweep. Record greatest positive and greatest negative deviation of signal peaks from center horizontal graticule line (neglect deviations caused by tuning marker).

Maximum _____ divisions

Minimum _____ divisions

18. To calculate frequency response for 6 – 9 GHz frequency band, subtract mean deviation of step 16 from maximum and minimum values recorded in step 17. Frequency response should not exceed ± 1.0 dB (± 1.0 division).

Maximum _____ divisions (6 – 9 GHz)

Minimum _____ divisions (6 – 9 GHz)

19. Select 3 – 9 GHz frequency band on spectrum analyzer. Set sweep oscillator to CW and frequency to 6.0 GHz. Use CW control to center signal on spectrum analyzer display. Set AF control for 6 GHz, and trigger a sweep. Adjust spectrum analyzer TUNING control to reposition tuning marker. Trigger another sweep. Record greatest positive and greatest negative deviation of signal peaks from center horizontal graticule line (neglect deviations caused by tuning marker).

Maximum _____ divisions

Minimum _____ divisions

20. Subtract mean deviation of step 16 from maximum and minimum values recorded in step 19. Frequency response for 3 – 9 GHz frequency band should not exceed ± 1.5 dB (± 1.5 divisions).

Maximum _____ divisions (3 – 9 GHz)

Minimum _____ divisions (3 – 9 GHz)

PERFORMANCE TESTS

4-19. FREQUENCY RESPONSE (Cont'd)

21. Select 9 – 15 GHz frequency band on spectrum analyzer. Set sweep oscillator to CW and frequency to 12.0 GHz. Use CW control to center signal on spectrum analyzer display. Trigger a 6 GHz sweep. Adjust spectrum analyzer TUNING control to reposition tuning marker. Trigger another sweep. Record greatest positive and greatest negative deviation of signal peaks from center horizontal graticule line (neglect deviations caused by tuning marker).

Maximum _____ divisions

Minimum _____ divisions

22. Subtract mean deviation of step 16 from maximum and minimum values recorded in step 21. Frequency response for 9 – 15 GHz frequency band should not exceed ±1.8 dB (±1.8 divisions).

Maximum _____ divisions (9 – 15 GHz)

Minimum _____ divisions (9 – 15 GHz)

23. Select 6 – 15 GHz frequency band on spectrum analyzer. Set sweep oscillator to CW and frequency to 10.5 GHz. Use CW control to center signal on spectrum analyzer display. Set AF control for 9 GHz and trigger a sweep. Adjust spectrum analyzer TUNING control several turns to reposition tuning marker. Trigger another sweep. Record greatest positive and greatest negative deviation of signal peaks from center horizontal graticule line (neglect deviations caused by tuning marker).

Maximum _____ divisions

Minimum _____ divisions

23. Subtract mean deviation of step 16 from maximum and minimum values recorded in step 23. Frequency response for 6 – 15 GHz frequency band should not exceed ±2.1 dB (±2.1 divisions).

Maximum _____ divisions (6 – 15 GHz)

Minimum _____ divisions (6 – 15 GHz)

25. Select 12.1 – 21 GHz frequency band on spectrum analyzer and adjust TUNING control fully clockwise. Set sweep oscillator to CW and frequency to 15 GHz. Set AF control for 6 GHz and trigger a sweep. Record greatest positive and greatest negative deviation of signal peaks from center horizontal graticule line (12.1 GHz to 18 GHz).

Maximum _____ divisions

Minimum _____ divisions

PERFORMANCE TESTS

4-19. FREQUENCY RESPONSE (Cont'd)

26. Subtract mean deviation of step 16 from maximum and minimum values recorded in step 25. Frequency response for 12.1 – 18 GHz portion of 12.1 – 21 GHz frequency band should not exceed ± 2.3 dB (± 2.3 divisions).

Maximum _____ divisions (12.1 – 18 GHz)

Minimum _____ divisions (12.1 – 18 GHz)

Frequency Response, 18 – 21 GHz

27. Disconnect power splitter from 20-dB attenuator and connect it to the power sensor. Set sweep oscillator to **CW** with frequency of 18.0 GHz and measure output at power splitter with power meter.

_____ dBm

28. Use **CW** control to slowly tune sweep oscillator from 18 GHz to 21 GHz. Note all peak deviations from reference power level (recorded in step 27) and the frequencies at which they occur. Record frequencies and power levels in Table 4-7.

29. Connect output of power splitter through 20-dB attenuator to spectrum analyzer input. Adjust spectrum analyzer TUNING control counterclockwise several turns. Use **CW** control to tune sweep oscillator to frequencies recorded in step 28 and record deviation of signal peak from center horizontal graticule line.

30. Set sweep oscillator to **CW** with frequency of 19.5 GHz. Set AF control for 3 GHz and trigger a sweep. Note greatest positive and greatest negative deviation of signal peaks (18 GHz to 21 GHz). Use sweep oscillator **CW** control to tune to points of greatest deviation. Record frequencies and deviations from center horizontal graticule line in Table 4-7.

31. Disconnect power splitter from 20-dB attenuator and connect it to the power sensor. Use **CW** control to tune sweep oscillator to frequencies recorded in step 30 and record power levels in Table 4-7.

32. Algebraically subtract reference power level recorded in step 27 from each power meter indicated recorded in Table 4-7. Record results in Power Deviation column (see example). Add corresponding deviation from center horizontal graticule line to each power deviation and record results in Sum of Deviations column. Subtract mean deviation of step 16 from each value in Sum of Deviations column and record results in Deviation from Mean column. Frequency response for 18 – 21 GHz portion of 12.1 – 21 GHz frequency band should not exceed ± 3.0 dB (± 3 divisions).

PERFORMANCE TESTS

4-19. FREQUENCY RESPONSE (Cont'd)

TABLE 4-7. CORRECTING FOR FREQUENCY RESPONSE OF SIGNAL SOURCE

Frequency (GHz)	Power Meter Indication (dBm)	Power Deviation* (dB)	Deviation from Center Graticule Line (divisions or dB)	Sum of Deviations (dB)	Deviation from Mean (dB)
18.0		0 (Ref.)			

*deviation relative to power meter indication at 18.0 GHz, recorded in step 27.

EXAMPLE (MEAN DEVIATION OF −0.1 dB)

Frequency (GHz)	Power Meter Indication (dBm)	Power Deviation* (dB)	Deviation from Center Graticule Line (divisions or dB)	Sum of Deviations (dB)	Deviation from Mean (dB)
18.0	–8.0	0 (Ref.)	–0.4	–0.4	–0.3
18.6	–9.0	–1.0	–1.0	–2.0	–1.9
19.6	–8.5	–0.5	–1.0	–1.5	–1.4
20.1	–7.0	+1.0	0.0	+1.0	+1.1
21.8	–9.0	–1.0	–0.4	–1.4	–1.3
20.6	–8.5	–0.5	–2.0	–2.5	–2.4
21.2	–7.5	+0.5	+1.5	+2.0	+2.1

PERFORMANCE TESTS

4-20. GAIN COMPRESSION

SPECIFICATION:

Gain compression is less than 0.5 dB for a −10 dBm input level with 0 dB attenuation.

DESCRIPTION:

Gain compression is measured by changing the power level at the spectrum analyzer input from −20 dBm to −10 dBm. The displayed signal level will change by less than 10 dB, indicating gain compression in the input mixer. Since a 10-dB change in IF gain is used to keep the signal trace near the same point on the display when the input power is increased, the error due to this IF gain change is first measured, then subtracted from the displayed deviation to give the deviation due only to gain compression.

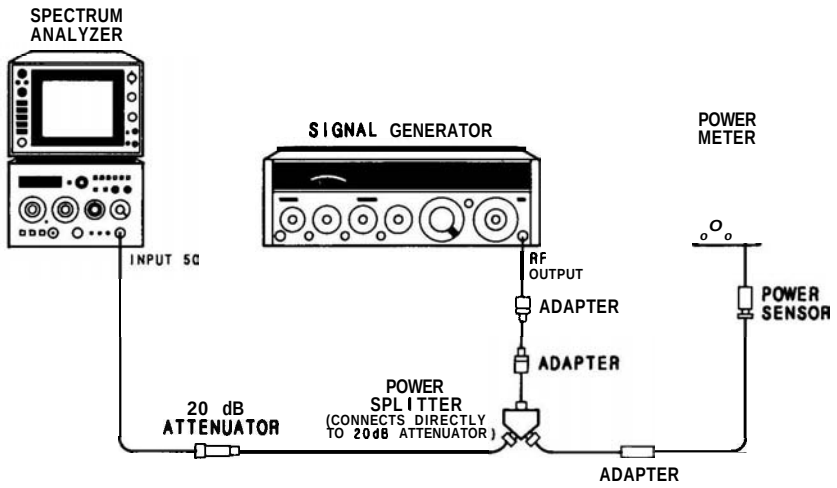

FIGURE 4-16. GAIN COMPRESSION TEST SETUP

EQUIPMENT:

Signal Generator	HP 8640B
Power Meter	HP 435A/B
Power Sensor	HP 8481A
Power Splitter	HP 11667A, Opt. C16
20-dB Attenuator	HP 8491B, Opt. 010
Adapter, Type N (m) to BNC (f) (2 required)	HP 1250-0780
Adapter, Type N (f) to N (f)	HP 1250-1472

PERFORMANCE TESTS

4-20. GAIN COMPRESSION (Cont'd)

PROCEDURE:

1. Set equipment controls as follows:

Spectrum Analyzer:

FREQUENCY BAND GHz	.01 – 3
TUNING	0.050 GHz
FREQ SPAN/DIV	100 kHz
RESOLUTION BW	300 kHz, uncoupled
INPUTATTEN	10 dB
REFERENCE LEVEL	– 10 dBm
REFLEVELFINE	–10
Amplitude Scale	10 dB/DIV
SWEEP TIME/DIV	AUTO
SWEEPTRIGGER	FREE RUN
ALT IF	OFF
SIGIDENT	OFF
BLCLIP	OFF
VIDEOFILTER	OFF

Signal Generator:

COUNTERMODE	INT
AM	OFF
FM	OFF
FREQUENCYTUNE	50 MHz
RF	ON
OUTPUTLEVEL	–4 dBm

2. Connect equipment as shown in Figure 4-16. Note that the 10-dB attenuator is placed between the power splitter and spectrum analyzer INPUT 50Ω connector.

3. Adjust signal generator OUTPUT LEVEL control for a power meter reading of – 10 dBm (–20 dBm at spectrum analyzer INPUT 50Ω connector).

4. Adjust spectrum analyzer TUNING control to center 50 MHz signal on CRT. Set Amplitude Scale control to 1 dB/DIV and adjust REF LEVEL FINE control to place peak of signal at a convenient horizontal graticule line other than top graticule line.

5. Adjust signal generator OUTPUT LEVEL control for a power meter reading of 0 dBm (– 10 dBm at spectrum analyzer INPUT 50Ω connector).

6. Set spectrum analyzer REFERENCE LEVEL control to 0 dBm, leaving REF LEVEL FINE control at setting established in step 4. Record deviation of signal peak from reference graticule line of step 4 (step-gain error). Values above reference line are positive (+); those below are negative (–).

_____ dB

PERFORMANCE TESTS

4-20. GAIN COMPRESSION (Cont'd)

7. Adjust signal generator OUTPUT LEVEL control for a power meter reading of −10 dBm (−20 dBm at spectrum analyzer 50Ω connector).

8. Set spectrum analyzer INPUT ATTEN control to 0 dBm, REFERENCE LEVEL control to −20 dBm, and REF LEVEL FINE control to 0. Adjust REF LEVEL CAL control to place peak of signal at reference graticule line of step 4.

9. Adjust signal generator OUTPUT LEVEL control for a power meter reading of 0 dBm (−10 dBm at spectrum analyzer 50Ω connector).

10. Set spectrum analyzer REFERENCE LEVEL control to −10 dBm. Record deviation of signal peak from reference graticule line of step 4.

_____ dB

11. Calculate gain compression by algebraically subtracting step-gain error (step 4) from deviation of signal peak (step 7). Gain compression should be less than 0.5 dB,

_____ dB

12. Set spectrum analyzer INPUT ATTEN control to 10 dB and REFERENCE LEVEL control to −10 dBm. Connect CAL OUTPUT to INPUT 50Ω connector and recalibrate REF LEVEL CAL control setting.

PERFORMANCE TESTS

4-21. BANDWIDTH SWITCHING (AMPLITUDE VARIATION)

SPECIFICATION:

Bandwidths 3 MHz to 300 kHz: $< \pm 0.5$ dB
Bandwidths 3 MHz to 1 kHz: $< \pm 1.0$ dB

DESCRIPTION:

The CAL OUTPUT signal is applied to INPUT 50Ω connector and displayed on CRT. The peak of displayed 35-MHz signal is centered on CRT and adjusted for a vertical deflection of several divisions. The amplitude variation of the signal is measured for each RESOLUTION BW control setting. The overall variation between RESOLUTION BW settings of 3 MHz through 300 kHz should be less than 1.0 dB (±0.5 dB). The overall variation between RESOLUTION BW settings of 3 MHz through 1 kHz should be less than 2.0 dB (±1.0 dB).

PROCEDURE:

1. Set spectrum analyzer controls as follows:

FREQUENCY BAND GHz	.01 – 3
TUNING	0.035 GHz
FREQ SPAN/DIV	1 MHz
RESOLUTION BW	3 MHz, uncoupled
INPUT ATTEN	10 dB
REFERENCE LEVEL	0 dBm
REFLEVELFINE	–10
Amplitude Scale	1 dB/DIV
SWEEP TIME/DIV	AUTO
SWEEPTRIGGER	FREE RUN
ALTIF	OFF
SIG IDENT	OFF
BLCLIP	OFF
VIDEOFILTER	OFF

2. Connect CAL OUTPUT signal to INPUT 50Ω connector.

3. Adjust TUNING control to center 35-MHz signal on CRT.

4. Adjust REF LEVEL FINE control to position peak of signal seven divisions above graticule baseline.

5. Set RESOLUTION BW and FREQ SPAN/DIV controls to settings indicated in Table 4-8. Record deviation of signal peak from reference graticule line for each RESOLUTION BW control setting. Values above reference line set in step 4 are positive (+); values below reference line are negative (–).

6. To find overall variation in Table 4-8, algebraically subtract greatest negative amplitude deviation from greatest positive amplitude deviation. If all changes in amplitude are of the same sign, overall variation is largest positive or largest negative change in amplitude. Overall variation between 3 MHz and 300 kHz RESOLUTION BW setting should be <1.0 dB (±0.5 dB). Overall variation between 3 MHz and 1 kHz RESOLUTION BW settings should be <2.0 dB (±1.0 dB).

PERFORMANCE TESTS

4-21. BANDWIDTH SWITCHING (AMPLITUDE VARIATION) (Cont'd)

TABLE 4-8. BANDWIDTH SWITCHING (AMPLITUDE VARIATION)

RESOLUTION BW Setting	FREQ SPAN/DIV Setting	Amplitude Deviation (dB)	Overall Variation Between 3 MHz and 300 kHz RESOLUTION BW Settings (dB)	Overall Variation Between 3 MHz and 1 kHz RESOLUTION BW Settings (dB)
3 MHz	1 MHz	0 (Ref)		
1 MHz	500 kHz	———	———	
300 kHz	100 kHz	———		
100 kHz	50 kHz	———		———
30 kHz	10 kHz	———		
10 kHz	10 kHz	———		
3 kHz	10 kHz	———		
1 kHz	10 kHz	———		

PERFORMANCE TESTS

4-22. INPUT ATTENUATOR ACCURACY

SPECIFICATION:

Step Accuracy (0 dB to 60 dB): < ± 1.0 dB per 10-dB step, 0.01 to 18.0 GHz
Maximum Cumulative Step Error (0 dB to 60 dB): < ± 2.4 dB, 0.01 to 18.0 GHz

DESCRIPTION:

The input attenuator accuracy is tested over the range of 0 to 60 dB using an RF substitution method. A step attenuator that has been calibrated at 30 MHz by a Standards Laboratory is used for substitution. The known error of the calibrated attenuator is taken into account when computing the input attenuator accuracy.

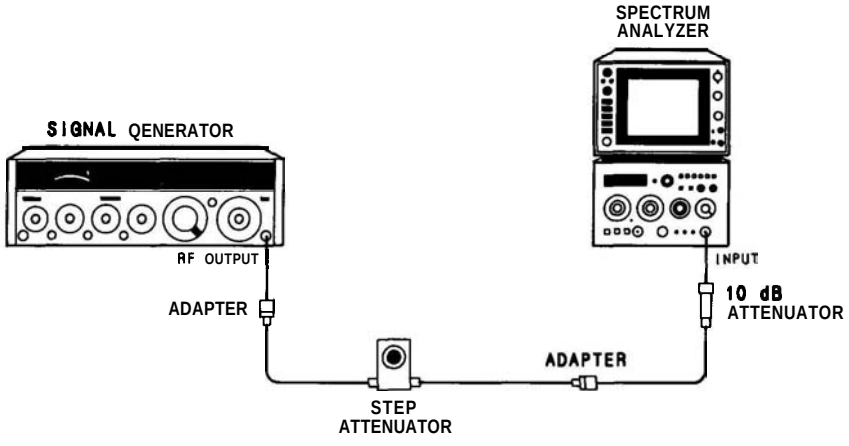

FIGURE 4-17. INPUT ATTENUATOR ACCURACY TEST SETUP

EQUIPMENT:

Signal Generator	HP 8640B
Step Attenuator (10 dB/step)	HP 355D, Opt. H82
10-dB Attenuator	HP 8491B, Opt. 010
Adapter, Type N (m) to BNC (f) (2 required)	HP 1250-0780

PERFORMANCE TESTS

4-22. INPUT ATTENUATOR ACCURACY (Cont'd)

PROCEDURE:

1. Connect equipment as shown in Figure **4-17** and set controls as follows:

   Spectrum Analyzer:

FREQUENCY BAND GHz	.01 – 3
TUNING	30 MHz
FREQ SPAN/DIV	2 MHz
RESOLUTIONBW	1 MHz
INPUTATTEN	60 dB
REFERENCELEVEL	0 dBm
REFLEVELFINE	0
Amplitude Scale	10 dB/DIV
SWEEP TIME/DIV	AUTO
SWEEPTRIGGER	FREE RUN
ALTIF	OFF
SIGIDENT	OFF
BLCLIP	OFF
VIDEOFILTER	2 o'clock

   Signal Generator:

COUNTER MODE	INT EXPAND X10
AM	OFF
FM	OFF
FREQUENCYTUNE	30.0 MHz
RF	ON
OUTPUTLEVEL	0 dBm

2. Set step attenuator to 0 dB and use spectrum analyzer TUNING control to center 30 MHz signal from signal generator on CRT display. Set FREQ SPAN/DIV to 20 kHz, RESOLUTION BW to 10 kHz, and Amplitude Scale to 1 dB/DIV.

3. Adjust signal generator OUTPUT LEVEL control to position peak of signal seven divisions above graticule baseline.

4. Set step attenuator and INPUT ATTEN control to settings indicated in Table **4-9.** For each setting, record deviation of signal peak from reference graticule line set in step 3.

NOTE

The REFERENCE LEVEL control setting changes by 10 dB for every 10-dB change in INPUT ATTEN. Do not change the REFERENCE LEVEL setting after changing the INPUT ATTEN setting.

PERFORMANCE TESTS

4.22. INPUT ATTENUATOR ACCURACY (Cont'd)

TABLE 4-9. INPUT ATTENUATOR ACCURACY

INPUT ATTEN Setting (dB)	Step Attenuator Setting (dB)	Amplitude Deviation (dB)	Step Attenuator Error (Calibration)*	Corrected Deviation (dB)
60	0	0 (Ref)	(Ref)	0 (Ref)
50	10	_____	_____	_____
40	20	_____	_____	_____
30	30	_____	_____	_____
20	40	_____	_____	_____
10	50	_____	_____	_____
0	60	_____	_____	_____

***Attenuations > dial settings are positive (+). Attenuations < dial settings are negative (–). For example, 9.99 dB calibration for a 10 dB attenuator setting represents an error of –0.01 dB.**

5. To compute corrected deviation for each setting, add step attenuator error to amplitude deviation. Corrected deviation should not exceed ±1.0 dB between any two adjacent INPUT ATTEN setting.

_____ dB Maximum Error per 10-dB Step

6. Record maximum positive and maximum negative corrected deviation values. Difference between these two values (maximum cumulative step error) should not exceed 2.4 dB.

_____ dB Maximum Positive Corrected Deviation

_____ dB Maximum Negative Corrected Deviation

_____ dB Maximum Cumulative Step Error

PERFORMANCE TESTS

4-23. REFERENCE LEVEL ACCURACY

SPECIFICATION:

Step Accuracy (steps referenced with 0 dB input attenuation):
– 10 dBm to – 80 dBm: ±0.5 dB
– 10 dBm to – 100 dBm: ±1.0 dB

Vernier Accuracy: ±0.5 dB

DESCRIPTION:

The reference level accuracy is tested over the range of – 10 dBm to – 100 dBm by checking the IF gain steps in 1 dB/DIV (Log) and in LIN. The resulting maximum deviation in each case must be less than ±0.5 dB from – 10 dBm to – 80 dBm and less than ±1.0 dB from – 10 dBm to – 100 dBm.

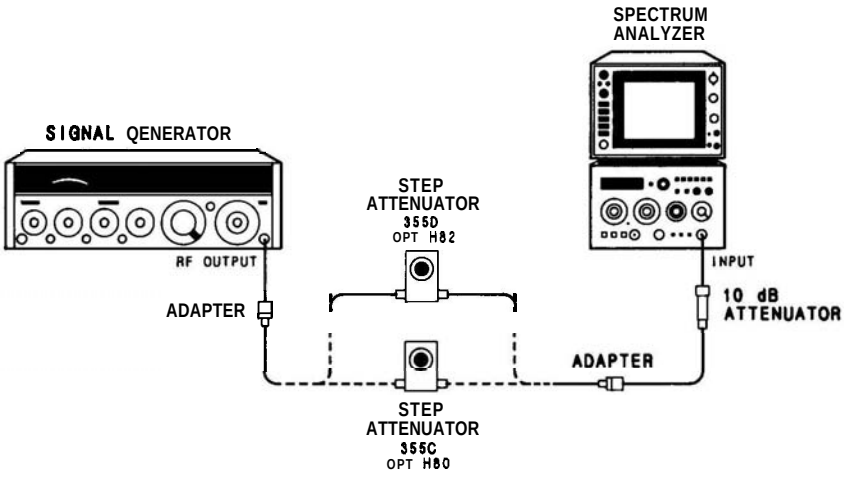

FIGURE 4-18. REFERENCE LEVEL ACCURACY TEST SETUP

EQUIPMENT:

Signal Generator	HP 8640B
10-dB Attenuator	HP 8491B, Opt. 010
Step Attenuator (1 dB/step)	HP 355C, Opt. H80
Step Attenuator (10 dB/step)	HP 355D, Opt. H82
Adapter, Type N (m) to BNC (f) (2 required)	HP 1250-0780

PERFORMANCE TESTS

4-23. REFERENCE LEVEL ACCURACY (Cont'd)

PROCEDURE:

Step Accuracy in Log Mode

1. Set equipment controls as follows:

Spectrum Analyzer:

FREQUENCY BAND GHz	.01 – 3
TUNING	30 MHz
FREQ SPAN/DIV	100 kHz
RESOLUTION BW	30 kHz, uncoupled
INPUTATTEN	0 dB
REFERENCE LEVEL	– 10 dBm
REFLEVELFINE	0
Amplitude Scale	1 dB/DIV
SWEEP TIME/DIV	AUTO
SWEEPTRIGGER	FREE RUN
ALTIF	OFF
SIG IDENT	OFF
BLCLIP	OFF
VIDEOFILTER	2 o'clock

Signal Generator:

COUNTERMODE	INT, EXPAND X10
AM	OFF
FM	OFF
FREQUENCYTUNE	30 MHz
RF	ON
OUTPUTLEVEL	– 2 dBm

2. Connect equipment as shown in Figure 4-18 using 10-dB step attenuator. Set step attenuator to 0 dB and adjust spectrum analyzer TUNING control to center 30 MHz signal on CRT Set FREQ SPAN/DIV control to 10 kHz and RESOLUTION BW control to 3 kHz, adjusting TUNING control as necessary to keep signal centered on CRT

3. Adjust signal generator OUTPUT LEVEL control to position peak of signal 6 divisions above graticule baseline. Set step attenuator and spectrum analyzer REFERENCE LEVEL control to settings indicated in Table 4-10. Record deviation of signal peak from 6th division for each setting.

4. To calculate Corrected Deviation, add Step Attenuator Error (calibration data at 30 MHz) to Deviation from 6th Division for each setting. Corrected Deviation should not exceed ±0.5 dB from – 10 dBm to – 80 dBm, and should not exceed ±1.0 dB from – 10 dBm to – 100 dBm. Record maximum values.

_____ dB (– 10 dBm to – 80 dBm)

_____ dB (– 10 dBm to – 100 dBm)

PERFORMANCE TESTS

4-23. REFERENCE LEVEL ACCURACY (Cont'd)

TABLE 4-10. IF GAIN ACCURACY IN LOG MODE

REFERENCE LEVEL Setting (dBm)	Step Attenuator Setting (dB)	Deviation from 6th Division (dB)	Step Attenuator Error (Calibration)* (dB)	Corrected Deviation (dB)
–10	0	0 (Ref)	(Ref)	0 (Ref)
–20	10	_____	_____	_____
–30	20	_____	_____	_____
–40	30	_____	_____	_____
–50	40	_____	_____	_____
–60	50	_____	_____	_____
–70	60	_____	_____	_____
–80	70	_____	_____	_____
–90	80	_____	_____	_____
–100	90	_____	_____	_____

***Attenuations > dial settings are positive (+). Attenuations < dial settings are negative (–). For example, 9.99 dB calibration for a 10 dB attenuator setting represents an error of –0.01 dB.**

Step Accuracy in Linear Mode

5. Set spectrum analyzer Amplitude Scale switch to LIN and REFERENCE LEVEL control to –10 dBm. Set step attenuator to 0 dB. Readjust signal generator OUTPUT LEVEL control to position peak of signal 6 divisions above graticule baseline.

6. Set step attenuator and spectrum analyzer REFERENCE LEVEL control to settings indicated in Table 4-11. Record deviation of signal peak from 6th division for each setting.

7. Using Table 4-12, convert Deviation from 6th Division in Linear Mode to Deviation in dB for each setting. Record dB values in Table 4-11.

8. To calculate Corrected Deviation, add Step Attenuator Error to Deviation from 6th Division in dB for each setting. Corrected Deviation should not exceed ±0.5 dB from –10 dBm to –80 dBm and ±1.0 dB from –10 dBm to –100 dBm. Record maximum values.

_____ dB (–10 dBm to –80 dBm)

_____ dB (–10 dBm to –100 dBm)

PERFORMANCE TESTS

4-23. REFERENCE LEVEL ACCURACY (Cont'd)

TABLE 4-11. IF GAIN ACCURACY IN LINEAR MODE

REFERENCE LEVEL Setting (dBm)	Step Attenuator Setting (dB)	Deviation from 6th Division Linear Mode (div.)	Deviation from 6th Division in dB*	Step Attenuator Error (Calibration)**(dB)	Corrected Deviation (dB)
–10	0	0(Ref.)	0(Ref.)	Ref.	0(Ref.)
–20	10				
–30	20				
–40	30				
–50	40				
–60	50				
–70	60				
–80	70				
–90	80				
–100	90				

*Use Table 4-12 to convert deviation in linear mode to deviation in dB.
**Attenuations > dial settings are positive (+). Attenuations < dial settings are negative (–).

TABLE 4-12. CONVERSION TABLE, DEVIATION IN LINEAR MODE

POSITIVE DEVIATIONS (Above 6th division from graticule baseline)		NEGATIVE DEVIATIONS (Below 6th division from graticule baseline)	
Linear (Divisions)	dB	Linear (Divisions)	dB
0	0	0	0
+.1	+0.14	–.1	–0.15
+.2	+0.28	–.2	–0.29
+.3	+0.42	–.3	–0.45
+.4	+0.56	–.4	–0.60
+.5	+0.70	–.5	–0.76
+.6	+0.82	–.6	–0.92
+.7	+0.96	–.7	–1.08
+.8	+1.09	–.8	–1.24
+.9	+1.21	–.9	–1.41
+1.0	+1.34	–1.0	–1.58
+1.1	+1.46	–1.1	–1.76
+1.2	+1.58	–1.2	–1.94
+1.3	+1.70		
+1.4	+1.82		
+1.5	+1.94		

PERFORMANCE TESTS

4-23. REFERENCE LEVEL ACCURACY (Cont'd)

Vernier Accuracy

9. Replace 10-dB step attenuator with 1-dB step attenuator. Set spectrum analyzer controls as follows:

FREQUENCY BAND GHz ..... .01 – 3
TUNING ..... 0.030 GHz
FREQ SPAN/DIV ..... 50 kHz
RESOLUTION BW ..... 300 kHz, uncoupled
INPUT ATTEN ..... 0 dB
REFERENCE LEVEL ..... – 10 dBm
REFLEVEL FINE 0
Amplitude Scale ..... 1 dB/DIV
SWEEP TIME/DIV ..... AUTO
SWEEP TRIGGER ..... FREE RUN
ALT IF ..... OFF
SIGIDENT ..... OFF
BLCLIP ..... OFF
VIDEO FILTER ..... 2 o'clock

10. Set step attenuator to 0 dB. Center signal on CRT and adjust signal generator OUTPUT LEVEL control to position peak of signal 6 divisions above graticule baseline. Set step attenuator and spectrum analyzer REFERENCE LEVEL FINE control to settings indicated in Table 4-13. Record deviation of signal peak from 6th division for each setting.

11. To compute Corrected Deviation, add Step Attenuator Error to Deviation from 6th Division for each setting. Corrected Deviation should not exceed ±0.5 dB for each setting. Record maximum value.

TABLE 4-13. VERNIER ACCURACY

_____ dB

Step Attenuator Setting (dB)	REFERENCE LEVEL FINE Setting	Deviation from 6th Division (dB)	Step Attenuator Error (Calibration)* (dB)	Corrected Deviation (dB)
0	0	0 (Ref)	(Ref)	0 (Ref)
1	–1	_____	_____	_____
2	–2	_____	_____	_____
3	–3	_____	_____	_____
4	–4	_____	_____	_____
5	–5	_____	_____	_____
6	–6	_____	_____	_____
7	–7	_____	_____	_____
8	–8	_____	_____	_____
9	–9	_____	_____	_____
10	–10	_____	_____	_____
11	–11	_____	_____	_____
12	–12	_____	_____	_____

*Attenuations > dial settings are positive (+). Attenuations < dial settings are negative (–).

PERFORMANCE TESTS

4-24. SWEEP TIME ACCURACY

SPECIFICATION:

There are 20 selectable and calibrated sweep times in a 1-2-5 sequence from 2 μsec/DIV to 10 sec/DIV (excluding 2 sec/DIV).

Sweep time accuracy: ±10% (±20% for 5 and 10 sec/DIV)

DESCRIPTION:

For SWEEP TIME/DIV control settings of 10 msec and less, the triangle-wave output of a function generator is used to modulate a 100-MHz signal applied to the spectrum analyzer input. This signal is demodulated in zero span, displaying a triangular waveform on the CRT. The function genertor is tuned to align the waveform with the vertical CRT graticule lines. The period of the function generator output is then measured with a counter to determine the sweep time.

For SWEEP TIME/DIV control settings of 20 msec and greater, the display (AUX B) PENLIFT/BLANKING output is connected directly to the counter. The blanking signal is "low" during a spectrum analyzer sweep; the time interval between the falling and rising edges is measured to determine the sweep speed.

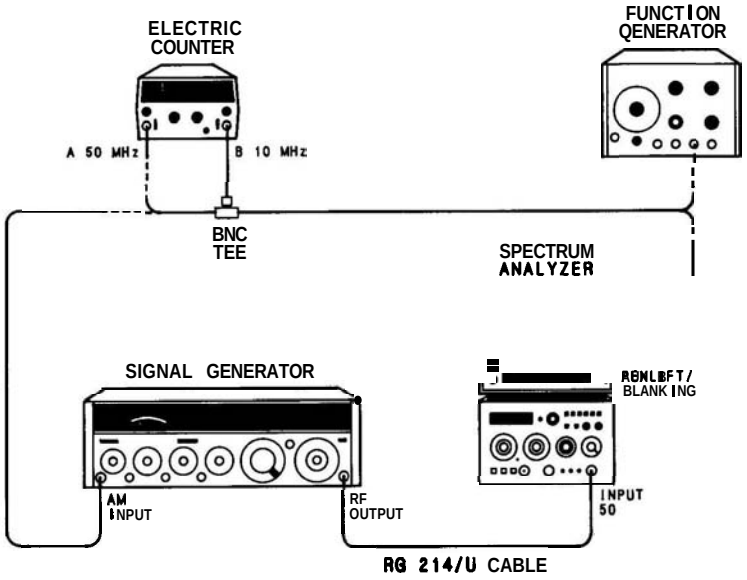

FIGURE 4-19. SWEEP TIME ACCURACY TEST SETUP

EQUIPMENT:

Signal Generator	HP 8640B
Function Generator	HP 3310A
50 MHz Universal Counter	HP 5300B/5302A
BNC Tee	HP 1250-0781
Cable Assembly RG-214/U with Type N Connectors	HP 11500A

PERFORMANCE TESTS

4-24. SWEEP TIME ACCURACY (Cont'd)

PROCEDURE:

1. Set equipment controls as follows:

Spectrum Analyzer:

FREQUENCY BAND GHz	.01 – 3
TUNING	0.100 GHz
FREQ SPAN/DIV	10 MHz
RESOLUTION BW	3 MHz, uncoupled
INPUT ATTEN	10 dB
REFERENCE LEVEL	– 10 dBm
REF LEVEL FINE	0
Amplitude Scale	LIN
SWEEP TIME/DIV	AUTO
SWEEP TRIGGER	FREE RUN
ALT IF	OFF
SIG IDENT	OFF
BL CLIP	OFF
VIDEO FILTER	OFF

Signal Generator:

COUNTER MODE	INT, EXPAND X10
AM	OFF
FM	OFF
FREQUENCY TUNE	100 MHz
RF	ON
OUTPUT LEVEL	– 10 dBm

Function Generator:

FUNCTION	TRI
RANGE	10K
Frequency	250 kHz
DC OFFSET LEVEL	0

50 MHz Universal Counter:

FUNCTION	PER AVG B
SAMPLE RATE	Full counterclockwise
TIME BASE	1 ms
SENSITIVITY (A)	9 o'clock
A 50 MHz Input	⊓⊔ (falling edge)
SENSITIVITY (B)	Full clockwise
B 10 MHz Input	⊔⊓ (rising edge)

PERFORMANCE TESTS

4-24. SWEEP TIME ACCURACY (Cont'd)

2. Connect equipment as shown in Figure 4-19. Connect counter's B 10 MHz input to the function generator low output and the signal generator's AM input.

3. Adjust spectrum analyzer TUNING control to center 100-MHz signal on CRT Set FREQ SPAN/DIV control to 0, leaving RESOLUTION BW control at 3 MHz setting. Set SWEEP TIME/DIV control to 2 μsec.

4. Set AM switch of HP 8640B to AC position. Adjust function generator AMPLITUDE control and signal generator AM MODULATION control for 50 percent modulation as indicated on the signal generator meter.

5. Set spectrum analyzer SWEEP TRIGGER control to VIDEO. Adjust REFERENCE LEVEL and REF LEVEL FINE controls to center waveform on CRT

6. Adjust function generator Frequency vernier to display exactly five cycles of triangle wave modulation on CRT, as shown in Figure 4-20a. Counter should indicate an average period of 4.00 ±0.04 ps.

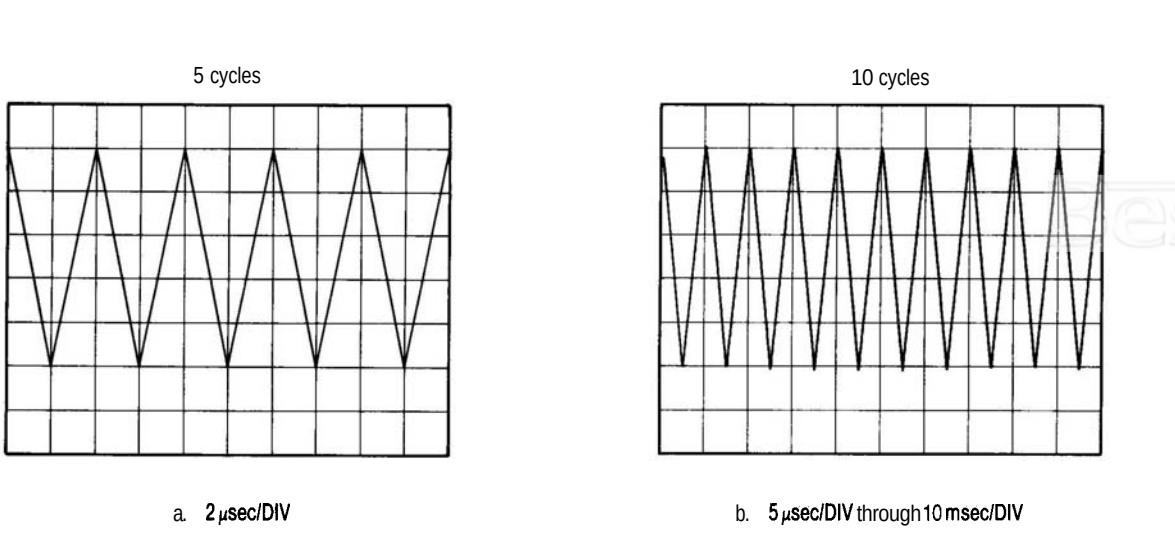

a. 2 μsec/DIV b. 5 μsec/DIV through 10 msec/DIV

FIGURE 4-20. SWEEP TIME ACCURACY

7. Calculate actual sweep time per division by dividing average period from step 6 by 2. Record value in Table 4-14.

8. For spectrum analyzer SWEEP TIME/DIV control settings of 5 psec through 10 msec, adjust function generator RANGE and frequency controls to display exactly 10 cycles of triangle wave modulation on CRT, as shown in Figure 4-20b. Average period readings displayed on counter correspond to actual sweep time per division. Record values in Table 4-14.

PERFORMANCE TESTS

4-24. SWEEP TIME ACCURACY (Cont'd)

TABLE 4-14. SWEEP TIME ACCURACY, 2 μSEC THROUGH 10 MSEC

SWEEP TIME/DIV Setting	Function Generator Frequency (Approx.)	Sweep Time per Division		
		Minimum	Actual	Maximum
2 psec	250 kHz	1.80 psec	_____ μsec	2.20 psec
5 psec	200 kHz	4.40 psec	_____ μsec	5.50 psec
10 psec	100 kHz	9.00 psec	_____ μsec	11.00 psec
20 psec	50 kHz	18.00 psec	_____ μsec	22.00 psec
50 psec	20 kHz	45.00 psec	_____ μsec	55.00 psec
.1 msec	10 kHz	90.0 psec	_____ μsec	110.0 psec
.2 msec	5 kHz	180.0 psec	_____ μsec	220.0 psec
.5 msec	2kHz	450.0 psec	_____ μsec	550.0 psec
1 msec	1 kHz	900 psec	_____ μsec	1100 psec
2 msec	500 Hz	1800 psec	_____ μsec	2200 psec
5 msec	200 Hz	4500 psec	_____ μsec	5500 psec
10 msec	100 Hz	9.00 msec	_____ msec	11.00 msec

9. Connect display rear-panel AUX B PENLIFT/BLANKING output to BNC tee at counter's B 10 MHz input. Connect other side of tee to counter's A 50 MHz input.

10. Set counter controls as follows:

FUNCTION ..... T.I. A to B
SAMPLE RATE ..... Full counterclockwise
TIME BASE ..... 0.1 ms
SENSITIVITY (A) ..... 9 o'clock
A 50 MHz Input ..... ⎍⎍ (falling edge)
SENSITIVITY (B) ..... 9 o'clock
B 10 MHz Input ..... ⎍⎍ (rising edge)

11. Set spectrum analyzer SWEEP TIME/DIV to 20 msec. Adjust counter's SENSITIVITY controls for a time interval reading of 0.2000 ±0.0200 sec. Record sweep time value in Table 4-15.

12. Verify remaining spectrum analyzer SWEEP TIME/DIV control settings of 50 msec through 10 sec, recording sweep time values in Table 4-15.

PERFORMANCE TESTS

4-24. SWEEP TIME ACCURACY (Cont'd)

TABLE 4-15. SWEEPTIME ACCURACY, 20 MSECTHROUGH 10 SEC

WEEP TIME/DIV Setting	Sweep Time		
	Minimum	Actual	Maximum
20 msec	0.180 sec	_____ sec	0.220 sec
50 msec	0.450 sec	_____ sec	0.550 sec
.1 sec	0.90 sec	_____ sec	1.10 sec
.2 sec	1.80 sec	_____ sec	2.20 sec
.5 sec	4.50 sec	_____ sec	5.50 sec
1 sec	9.0 sec	_____ sec	11.0 sec
5 sec	40.0 sec	_____ sec	60.0 sec
10 sec	80.0 sec	_____ sec	120.0 sec

PERFORMANCE TESTS

4-25. CALIBRATOR OUTPUT ACCURACY

SPECIFICATION:

Amplitude: – 10 dBm ±0.3 dB
Frequency: 35 MHz ±400 kHz

DESCRIPTION:

The frequency of the calibrator output signal is measured with a microwave counter. The calibrator output level is measured using a power meter.

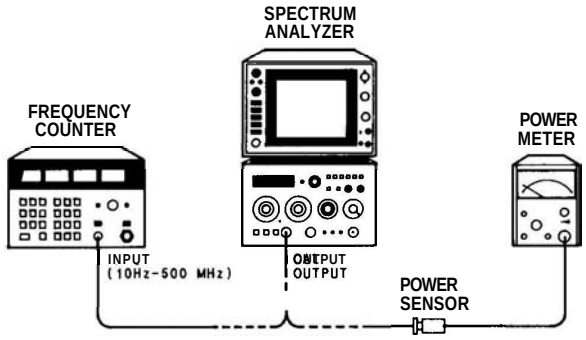

FIGURE 4-21. CALIBRATOR ACCURACY TEST SETUP

EQUIPMENT:

Frequency Counter	HP 5342A, Opt. 005
Power Meter	HP 435A/B
Power Sensor	HP 8481A

PROCEDURE:

1. Connect spectrum analyzer CAL OUTPUT to frequency counter's 10 Hz – 500 MHz (50Ω) input as shown in Figure 4-20. Measured output frequency should be 35 MHz ±400 kHz.

2. Zero and calibrate power meter. Connect power sensor, through adapter, to spectrum analyzer's CAL OUTPUT and measure power level. Calibrator output level should be – 10 dBm ±0.3 dB.

_____ dBm

PERFORMANCE TESTS

4-26. DISPLAY FIDELITY

SPECIFICATION:

Log Incremental Accuracy: ±0.1 dB per dB from Reference Level
Log Maximum Cumulative Error: < ± 1.5 dB over entire 70-dB range
Linear Accuracy; ±3% of Reference Level

DESCRIPTION:

The amplitude of the log display amplifier is tested by connecting a DVM to the display (AUX A) VERTICAL OUTPUT connector. A wide resolution bandwidth setting is selected so the signal appears as a straight horizontal line on the CRT. The DVM is used to provide good resolution when checking for + 1 dB per 10 dB step (0.1 dB/dB).

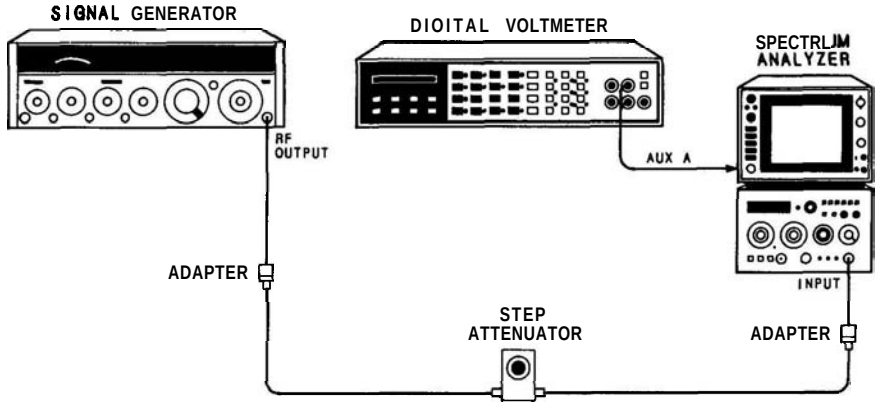

FIGURE 4-22. DISPLAY FIDELITY TEST SETUP

EQUIPMENT

Signal Generator	HP 8640B
Digital Voltmeter	HP 3556A
Step Attenuator (10 dB/step)	HP 355D, Opt. H82
Adapter, Type N (m) to BNC (f) (2 required)	HP 1250-0780
Cable, BNC to Banana Plug	HP 11001A

PROCEDURE:

Log Display Accuracy

1. Set equipment controls as follows:

Spectrum Analyzer:

FREQUENCY BAND GHz	.01 – 3
TUNING	0.030 GHz

PERFORMANCE TESTS

4-26. DISPLAY FIDELITY (Cont'd)

FREQ SPAN/DIV ..... 500 kHz
RESOLUTION BW ..... 300 kHz, uncoupled
INPUT ATTEN ..... 10 dB
REFERENCE LEVEL ..... 0 dBm
REFLEVELFINE 0
Amplitude Scale ..... LIN
SWEEP TIME/DIV ..... AUTO
SWEEPTRIGGER ..... FREE RUN
ALTIF ..... OFF
SIG IDENT ..... OFF
BL CLIP ..... OFF
VIDEO FILTER ..... OFF

Digital Voltmeter:

RANGE 100
FUNCTION ..... V (DC)
AUTO CAL ..... AUTO
TRIGGER ..... INTERNAL
MATH ..... OFF

Signal Generator:

COUNTERMODE ..... INT
AM ..... OFF
FM ..... OFF
FREQUENCYTUNE ..... 30 MHz
RF ..... ON
OUTPUT LEVEL ..... 0 dBm

2. With no signal at spectrum analyzer's INPUT 50Ω, measure and record offset voltage at (AUX A) VERTICAL OUTPUT connector.

_____ mV

3. Connect equipment as shown in Figure 4-22. Set step attenuator to 0 dB.

4. Set spectrum analyzer's Amplitude Scale to 10 dB/DIV and adjust TUNING control to center signal on CRT display.

5. Set spectrum analyzer's FREQ SPAN/DIV control to zero (0), VIDEO FILTER full CW (not in detent), and RESOLUTION BW control to 1 MHz. Adjust TUNING control for maximum reading on DVM.

6. Set signal generator OUTPUT LEVEL control for DVM reading of (+800 mV + offset (step 2) ±0.5 mV). Trace should be approximately at top CRT graticule line.

7. Record DVM readings for step attenuator settings, from 0 dB through 70 dB, in Table 4-16.

PERFORMANCE TESTS

4-26. DISPLAY FIDELITY (Cont'd)

TABLE 4-16. AMPLITUDE LOG DISPLAY ACCURACY

Attenuator Setting (dB)	DVM Reading (mV)	Corrected DVM Reading* (mV)	Theoretical Reading (mV)	Theoretical Reading Subtracted From Corrected DVM Reading (mV)	Difference Between Adjacent Readings (mV)
0	_____	+800 (Ref.)	+800	0	_____
10	_____	_____	+700	_____	_____
20	_____	_____	+600	_____	_____
30	_____	_____	+500	_____	_____
40	_____	_____	+400	_____	_____
50	_____	_____	+300	_____	_____
60	_____	_____	+200	_____	_____
70	_____	_____	+100	_____	_____

*DVM Reading minus offset recorded in step 2.

EXAMPLE TABLE OF 4-16

Attenuator Setting (dB)	DVM Reading (mV)	Corrected DVM Reading* (mV)	Theoretical Reading (mV)	Theoretical Reading Subtracted From Corrected DVM Reading (mV)	Difference Between Adjacent Readings (mV)
0	+805	+800	+800	0	
10	+708	+703	+700	+3	–3
20	+599	+594	+600	–6	+9
30	+497	+492	+500	–8	+2
40	+406	+401	+400	+1	–9

*DVM Reading minus offset recorded in step 2.

8. After recording DVM readings for step attenuator settings from 0 dB through 70 dB, calculate each Corrected DVM Reading by algebraically subtracting offset recorded in step 2. Record results in Table 4-16 (see sample computations).

9. Algebraically subtract corresponding Theoretical Reading from each Corrected DVM Reading, recording results in Table 4-16. Maximum value should not exceed ±15 mV, corresponding to ±1.5 dB. Divide maximum value by 10 to calculate Log Maximum Cumulative Error (in dB).

_____ dB Log Maximum Cumulative Error

PERFORMANCE TESTS

4-26. DISPLAY FIDELITY (Cont'd)

10. Algebraically subtract each converted reading (Theoretical Reading Subtracted from Corrected DVM Reading) from previous converted reading. Record results in Table 4-16 (see sample computations). Maximum difference between adjacent readings should not exceed + 10 mV, corresponding to ± 1 dB/10 dB or ± 0.1 dB/dB. Divide maximum value by 100 to calculate Log Incremental Error (in dB/dB).

_____ dB/dB Log Incremental Error

11. Replace 10-dB step attenuator with 1-dB step attenuator. Set step attenuator to 0 dB.

12. Set spectrum analyzer Amplitude Scale to LIN and adjust TUNING control for maximum reading on DVM.

13. Adjust signal generator OUTPUT LEVEL for DVM reading of 800 mV + offset (step 2) ± 0.5 mV. Trace should be approximately at top CRT graticule line.

14. Record DVM reading for step attenuator settings of 6 dB and 12 dB in Table 4-17.

15. Calculate each Corrected DVM Reading by algebraically subtracting offset recorded in step 2. Record results in Table 4-17.

16. Algebraically subtract corresponding Theoretical Reading from each Corrected DVM Reading, recording results in Table 4-17. Maximum value should not exceed ± 24 mV, corresponding to ± 3% of 800 mV Reference Level. Divide maximum value by 8 to calculate Percent Linear Error.

_____ % of Reference Level Linear Error

TABLE 4-17. AMPLITUDE LINEAR DISPLAY ACCURACY

Attenuator Setting (dB)	DVM Reading (mV)	Corrected DVM Reading* (mV)	Theoretical Reading (mV)	Theoretical Reading Subtracted From Corrected DVM Reading (mV)
0	_____	+800 (Ref.)	+800	0
6			+401	_____
12	_____		+201	_____

*DVM Reading minus offset recorded in step 2.

TABLE 4-18. PERFORMANCE TEST RECORD (1 OF 4)

Hewlett-Packard Company
Model 8559A
Spectrum Analyzer .01–21 GHz

Tested by _____

Serial No. _____ Date _____

Para. No.	Test Description	Results		
		Min	Actual	Max
4-11.	**Frequency Span Accuracy**			
	3. 200 MHz FREQ SPAN/DIV	–0.4 div	_____	+0.4 div
	4. 100 MHz FREQ SPAN/DIV	–0.4 div	_____	+0.4 div
	5. 50 MHz FREQ SPAN/DIV	–0.4 div	_____	+0.4 div
	6. 20 MHz FREQ SPAN/DIV	–0.4 div	_____	+0.4 div
	7. 10 MHz FREQ SPAN/DIV	–0.4 div	_____	+0.4 div
	8. 5 MHz FREQ SPAN/DIV	–0.4 div	_____	+0.4 div
	9. 2 MHz FREQ SPAN/DIV	–0.4 div	_____	+0.4 div
	10. 1 MHz FREQ SPAN/DIV	–0.4 div	_____	+0.4 div
	11. 500 kHz FREQ SPAN/DIV	–0.4 div	_____	+0.4 div
	14. 200 kHz FREQ SPAN/DIV	–0.4 div	_____	+0.4 div
	15. 100 kHz FREQ SPAN/DIV	–0.4 div	_____	+0.4 div
	50 kHz FREQ SPAN/DIV	–0.4 div	_____	+0.4 div
	20 kHz FREQ SPAN/DIV	–0.4 div	_____	+0.4 div
	10 kHz FREQ SPAN/DIV	–0.4 div	_____	+0.4 div
4-12.	**Tuning Accuracy**			
	5. .01 GHz	0.009 GHz	_____	0.011 GHz
	6. 1.5 GHz	1.494 GHz	_____	1.506 GHz
	8. 3.0 GHz	2.990 GHz	_____	3.010 GHz
	9. 6.1 GHz	6.083 GHz	_____	6.117 GHz
	7.5 GHz	7.480 GHz	_____	7.520 GHz
	9.0 GHz	8.977 GHz	_____	9.023 GHz
	3.1 GHz	3.089 GHz	_____	3.110 GHz
	6.0 GHz	5.983 GHz	_____	6.017 GHz
	9.0 GHz	8.977 GHz	_____	9.023 GHz
	9.1 GHz	9.077 GHz	_____	9.123 GHz
	12.0 GHz	11.971 GHz	_____	12.029 GHz
	15.0 GHz	14.965 GHz	_____	15.035 GHz
	6.1 GHz	6.083 GHz	_____	6.117 GHz
	10.5 GHz	10.474 GHz	_____	10.526 GHz
	15.0 GHz	14.965 GHz	_____	15.035 GHz
	12.1 GHz	12.071 GHz	_____	12.129 GHz
	17.0 GHz	16.961 GHz	_____	17.039 GHz
	21.0 GHz	20.953 GHz	_____	21.047 GHz

TABLE 4-18. PERFORMANCE TEST RECORD (2 OF 4)

Para. No.	Test Description	Results		
		Min	Actual	Max
4.13.	**Residual FM**			
	6. Peak-to-Peak Variation of Trace		_____	1.4 div (2 kHz/0.1 sec)
4-14.	**Noise Sidebands**			
	6. Noise Sidebands		_____	7.0 div down (−70 dB)
4-15.	**Resolution Bandwidth Accuracy**			
	7. 3 MHz Resolution BW	2.10 MHz	_____	3.90 MHz
	8. 3 MHz Resolution BW (ALT IF)	2.10 MHz	_____	3.90 MHz
	9. 1 MHz Resolution BW	850 kHz	_____	1150 kHz
	10. 300 kHz Resolution BW	255 kHz	_____	345 kHz
	11. 100 kHz Resolution BW	85 kHz	_____	115 kHz
	17. 30 kHz Resolution BW	25.5 kHz	_____	34.5 kHz
	18. 10 kHz Resolution BW	8.5 kHz	_____	11.5 kHz
	19. 3 kHz Resolution BW	2.55 kHz	_____	3.45 kHz
	20. 1 kHz Resolution BW	0.85 kHz	_____	1.15 kHz
4-16.	**Resolution Bandwidth Selectivity**			
	24. 3 MHz Resolution BW Selectivity		_____	15:1
	3 MHz Resolution BW Selectivity (ALT IF)		_____	15:1
	1 MHz Resolution BW Selectivity		_____	15:1
	300 kHz Resolution BW Selectivity		_____	15:1
	100 kHz Resolution BW Selectivity		_____	15:1
	30 kHz Resolution BW Selectivity		_____	15:1
	10 kHz Resolution BW Selectivity		_____	15:1
	3 kHz Resolution BW Selectivity		_____	15:1
	1 kHz Resolution BW Selectivity		_____	15:1
4-17.	**Average Noise Level**			
	5. Average Noise Level, .01–3 GHz		_____	−111 dBm
	6. Average Noise Level, 6–9 GHz		_____	−108 dBm
	7. Average Noise Level, 3–9 GHz		_____	−103 dBm
	8. Average Noise Level, 9–15 GHz		_____	−98 dBm
	9. Average Noise Level, 6–15 GHz		_____	−93 dBm
	10. Average Noise Level, 12.1–18 GHz		_____	−92 dBm
	11. Average Noise Level, 18–21 GHz		_____	−90 dBm

TABLE 4-18. PERFORMANCE TEST RECORD (3 OF 4)

Para. No.	Test Description	Results		
		Min.	Actual	Max.
4-18.	**Residual Responses**			
	6. Residual Responses, .01 GHz to 3 GHz		_____	–90 dBm
	7. Residual Responses, .01 GHz to 3 GHz (ALT IF)		_____	–90 dBm
4-19.	**Frequency Response**			
	15. Frequency Response, .01 to 3.0 GHz		_____	±1.0 dB
	18. Frequency Response, 6.0 to 9.0 GHz		_____	±1.0 dB
	20. Frequency Response, 3.0 to 9.0 GHz		_____	±1.5 dB
	22. Frequency Response, 9.0 to 15.0 GHz		_____	±1.8 dB
	24. Frequency Response, 6.0 to 15.0 GHz		_____	±2.1 dB
	26. Frequency Response, 12.1 to 18.0 GHz		_____	±2.3 dB
	32. Frequency Response, 18.0 to 21.0 GHz		_____	±3.0 dB
4-20.	**Gain Compression**			
	11. Gain Compression		_____	0.5 dB
4-21.	**Bandwidth Switching (Amplitude Variation)**			
	6. 3 MHz to 300 kHz (overall variation)	–0.5 dB	_____	+0.5 dB
	3 MHz to 1 kHz (overall variation)	–1.0 dB	_____	+1.0 dB
4-22.	**Input Attenuator Accuracy**			
	5. Maximum Error per 10-dB step (0 dB–60 dB)	–1.0 dB	_____	+1.0 dB
	6. Maximum Cumulative Step Error (0 dB–60 dB)		_____	+2.4 dB
4-23.	**Reference Level Variation**			
	4. Reference Level Error in Log (–10 dBm to –80 dBm)	–0.5 dB	_____	+0.5 dB
	Reference Level Error in Log (–10 dBm to –100 dBm)	–1.0 dB	_____	+1.0 dB
	8. Reference Level Error in LIN (–10 dBm to –80 dBm)	–0.5 dB	_____	+0.5 dB
	Reference Level Error in LIN (–10 dBm to –100 dBm)	–1.0 dB	_____	+1.0 dB
	11. Vernier Error	–0.5 dB	_____	+0.5 dB

TABLE 4-18. PERFORMANCE TEST RECORD (4 OF 4)

Para. No.	Test Description	Results		
		Min.	Actual	Max.
4-24.	**Sweep Time Accuracy**			
	7. Sweep Time, 2 μsec/div	1.80 psec	_____	2.20 psec
	8. Sweep Time, 5 μsec/div	4.50 psec	_____	5.50 psec
	Sweep Time, 10 μsec/div	9.00 psec	_____	11.00 psec
	Sweep Time, 20 μsec/div	18.00 psec	_____	22.00 psec
	Sweep Time, 50 μsec/div	45.00 psec	_____	55.00 psec
	Sweep Time, .1 msec/div	90.00 psec	_____	110 psec
	Sweep Time, .2 msec/div	180 psec	_____	220 psec
	Sweep Time, .5 msec/div	450 psec	_____	550 psec
	Sweep Time, 1 msec/div	900 psec	_____	1100 psec
	Sweep Time, 2 msec/div	1800 psec	_____	2200 psec
	Sweep Time, 5 msec/div	4500 psec	_____	5500 psec
	Sweep Time, 10 msec/div	9.00 msec	_____	11.00 msec
	12. Sweep Time, 20 msec/div	0.180 sec	_____	0.220 sec
	Sweep Time, 50 msec/div	0.450 sec	_____	0.550 sec
	Sweep Time, .1 sec/div	0.90 sec	_____	1.10 sec
	Sweep Time, .2 sec/div	1.80 sec	_____	2.20 sec
	Sweep Time, .5 sec/div	4.50 sec	_____	5.50 sec
	Sweep Time, 1 sec/div	9.0 sec	_____	11 sec
	Sweep Time, 5 sec/div	40.0 sec	_____	60 sec
	Sweep Time, 10 sec/div	80.0 sec	_____	120 sec
4-25.	**Calibrator Output Accuracy**			
	1. Calibrator Output Frequency	34.600 MHz	_____	35.400 MHz
	2. Calibrator Output Power (50Ω)	−10.3 dBm	_____	−9.7 dBm
4-26.	**Display Fidelity**			
	9. Log Maximum Cumulative Error	−1.5 dB	_____	+1.5 dB
	10. Log Incremental Error	−0.1 dB/dB	_____	+0.1 dB/dB
	16. Percent Linear Error (Percent of Reference Level)		_____	3%

SECTION V
ADJUSTMENTS

5-1. INTRODUCTION

5-2. This section describes the adjustments used to restore the HP 8559A to its peak operating condition after a repair or to compensate for changes resulting from component aging. Illustrations showing the appropriate test setups are included in the adjustment procedures. Table 5-1 lists all the adjustments by adjustment name, adjustment reference designator, and by the paragraph number of the adjustment procedure. Included in the table is a brief description of the purpose of the adjustment.

5-3. Data taken during an adjustment should be recorded in the spaces provided in the procedure. Comparison of initial data with data taken during later adjustments is useful for preventative maintenance and troubleshooting.

WARNING

The adjustments in this section require the HP 8559A to be removed from the display mainframe and connected through an extender cable assembly. Be very careful; the energy at some points in the instrument will, if contacted, cause personal injury. The adjustments in this section should be performed only by a skilled person who knows the hazard involved.

NOTE

Before performing any adjustments, allow 1 hour warmup time, unless otherwise noted.

5-4. EQUIPMENT REQUIRED

5-5. Test equipment and accessories required for the adjustment procedures are listed in Table 1-3. If the listed equipment is not available, substitute equipment may be used provided it meets the minimum specifications given in the table.

5-6. Adjustment Tools

5-7. Required service accessories, with part numbers, are illustrated in Section I.

5-8. For adjustments that require a non-metallic tuning tool, use fiber tuning tool, HP Part Number 8710-0033 (check digit 4). When a non-metallic tuning tool is not required, you may use an ordinary small, flat-bladed screwdriver or other suitable tool. Regardless of the tool used, do not try to force any adjustment control. Slug-tuning inductors and variable capacitors, especially, are easily damaged by excessive force.

5-9. Extender Cable Installation

WARNING

Disconnect display mainframe line power cord before installation of extender cable assembly.

5-10. Pull out the lock knob and slide the spectrum analyzer out of the display mainframe. If side stops are installed, refer to Section II for removal.

5-11. Carefully slide the extender cable assembly, HP Part Number 5060-0303, into the display mainframe, aligning the metal guide plate with the slotted side rails of the mainframe. Firmly seat the extender cable assembly to ensure good contact.

5-12. Connect the opposite end of the cable to the spectrum analyzer. The plug is keyed so it will go on correctly and will not make contact upside down. Remove the orange and the yellow leads from pins 3 and 4 on the A15 board at the rear of the spectrum analyzer. Connect the corresponding leads from the extender cable assembly to these pins by means of the insulated alligator clips.

5-13. RELATED ADJUSTMENTS

5-14. These adjustments should be performed when the troubleshooting information in Section **VIII** indicates that an adjustable circuit is not operating correctly. Perform the adjustments after repair or replacement of the circuit. The troubleshooting procedures and Table 5-2 specify the required adjustments.

5-15. FACTORY SELECTED COMPONENTS

5-16. Table 5-3 is a list of factory selected components used in the HP 8559A. The components are listed by reference designator, related adjustment paragraph, and by basis of selection. Factory selected components are identified by an asterisk (*) in the schematic diagrams in Section **VIII** and in the Replaceable Parts list in Section **VIII.** Part numbers for standard values of selected components are listed in Table **5-4.**

TABLE 5-1. ADJUSTABLE COMPONENTS (1 OF 3)

Adjustment Name	Reference Designator	Adjustment Paragraph	Description
GAIN	A1A2R28	5-30	Adjusts DPM high indication.
OFFSET	A1A2R29	5-30	Adjusts DPM low indication.
2nd MIXER MATCH	A5L2	5-26	Adjusts Second Converter output match.
Z1	A5Z1	5-26	Adjusts First IF Bandpass Filter Response.
Z2	A5Z2	5-26	Adjusts First IF Bandpass Filter Response.
Z3	A5Z3	5-26	Adjusts First IF Bandpass Filter Response.
2nd LO FREQUENCY	A5Z4	5-26	Adjusts Second LO Frequency.
3 GHz	A7R8	5-25	Adjusts YTO low-end frequency.
– 10v	A7R29	5-17	Adjusts –10V Power Supply output.
+14.5V	A7R41	5-17	Adjusts +14.5V Power Supply output.
6 GHz C	A7R47	5-25	Coarse adjusts YTO high-end frequency.
6 GHz F	A7R75	5-25	Fine adjusts YTO high-end frequency.
MO	A7R81	5-25	Adjusted to optimize centering between wide and narrow frequency spans.
DC	A7R83	5-25	Adusts delay compensation.
FM	A7R92	5-25	Adjusts YTO linearity.
REG	A8R34	5-26	Adjusts varactor bias voltage for proper Second LO Shift between Regular and Alternate IF.
OFF	A8R39	5-26	Adjusts varactor bias voltage (offset) for Second LO frequency with Regular IF.
SIG ID	A8R40	5-26	Adjusts Second LO shift for signal identifier 1 MHz below signal.
DPM ZERO	A8R61	5-30	Adjusts DPM Driver output for 0V with 0V input (offset adjustment).
VO	A8R62	5-17	Adjusts varactor bias voltage (offset) with Alternate IF.
+10V	A9R2	5-17	Adjusts +10V Power Supply output.
1 ms	A9R10	5-18	Adjusts sweep ramp to calibrate 1 ms/DIV sweep time.
5 ms	A9R13	5-18	Adjusts sweep ramp to calibrate 5 ms/DIV sweep time.
XTL	A9R72	5-21, 5-22	Adjusts 3 kHz IF bandwidth.
LC	A9R85	5-21, 5-22	Adjusts 1 MHz IF bandwidth.
C9	A10C9	5-27	Adjusts Second IF Bandpass Filter Response.
C10	A10C10	5-27	Adjusts Second IF Bandpass Filter Response.
C11	A10C11	5-27	Adjusts Second IF Bandpass Filter Response.
C12	A10C12	5-27	Adjusts Second IF Bandpass Filter Response.
CAL FREQ	A10C46	5-29	Adjusts CAL OUTPUT frequency.
LO ADJ	A10L12	5-27	Adjusts Third LO frequency.
CAL AMPL	A10R13	5-29	Adjusts CAL OUTPUT amplitude.
SYM	A11C15	5-21	Adjusts symmetry of first crystal bandwidth filter stage.
LC CTR	A11C23	5-21	Adjusts centering of first LC bandwidth filter stage.
CTR	A11C25	5-21	Adjusts centering of first crystal bandwidth filter stage.

TABLE 5-1. ADJUSTABLE COMPONENTS (2 OF 3)

Adjustment Name	Reference Designator	Adjustment Paragraph	Description
SYM	A11C38	5-21	Adjusts symmetry of second crystal bandwidth filter stage.
LC CTR	A11C45	5-21	Adjusts centering of second LC bandwidth filter stage.
CTR	A11C54	5-21	Adjusts centering of second crystal bandwidth filter stage.
C73 (LC DIP)	A11C73	5-21	Dip adjusts first LC bandwidth filter stage.
C74 (LC DIP)	A11C74	5-21	Dip adjusts second LC bandwidth filter stage.
LC	A11R26	5-21	Adjusts LC feedback of bandwidth filter.
XTL	A11R31	5-21	Adjusts crystal feedback of bandwidth filter.
RF GAIN	A12R5	5-23	Adjusts overall gain of step gain amplifiers.
10D (10 dB)	A12R6	5-24	Adjusts 10 dB step gain amplifier.
20D (20 dB)	A12R21	5-24	Adjusts first 20 dB step gain amplifier.
40D (40 dB)	A12R29	5-24	Adjusts second 20 dB step gain amplifier.
LC CTR	A13C23	5-21	Adjusts centering of first LC bandwidth filter stage.
CTR	A13C25	5-21	Adjusts centering of first crystal bandwidth filter stage.
SYM	A13C38	5-21	Adjusts symmetry of second crystal bandwidth filter stage.
LC CTR	A13C45	5-21	Adjusts centering of second LC bandwidth filter stage.
CTR	A13C54	5-21	Adjusts centering of second crystal bandwidth filter stage.
C73 (LC DIP)	A13C73	5-21	Dip adjusts first LC bandwidth filter stage.
C74 (LC DIP)	A13C74	5-21	Dip adjusts second LC bandwidth filter stage.
LC	A13R26	5-21	Adjusts LC feedback of bandwidth filter.
XTL	A13R31	5-21	Adjusts crystal feedback of bandwidth filter.
OFFSET	A14R10	5-19	Adjusts −8V temperature compensated supply.
TC	A14R21		Adjusts gain of +1V supply to provide temperature compensation for log mode temperature controlled variable gain amplifier. (Factory adjustable only.)
SLOPE	A14R23	5-19	Adjusts gain of log mode temperature controlled gain amplifier.
G6	A14R27	5-19	Adjusts combined gain of 2nd and 3rd stages in linear mode.
G5	A14R30	5-19	Adjusts gain of 4th stage in linear mode.
G4	A14R33	5-19	Adjusts gain of 5th stage in linear mode.
LIN	A14R34	5-19	Adjusts combined gain of 6th and 7th stages in linear mode.
−10 dB	A14R39	5-19	Adjusts shape of log fidelity curve at −10 dB.
−30 dB	A14R69	5-19	Adjusts shape of log fidelity curve at −30 dB.
1 VT	A14R88		Adjusts voltage at A14TP1 for approximately +1V. (Factory adjustable only.)

TABLE 5-1. ADJUSTABLE COMPONENTS (3 OF 3)

Adjustment Name	Reference Designator	Adjustment Paragraph	Description
LOG GAIN	A14R121	5-19	Adjusts dc offset circuitry at output of Log Amplifier Assembly A14 for 10 dB steps in log mode.
1 dB (offset)	A15R1	5-20	Adjusts LOG 10 dB/DIV translation.
OD (0 dB)	A12R35	5-24	Adjusts variable gain amplifier for 0 dB with REF LEVEL FINE control set to 0 dB.
−12D (−12 dB)	A12R39	5-24	Adjusts variable gain amplifier for −12 dB with REF LEVEL FINE control set to −12 dB.
1B	A12R47	5-28	Adjusts slope of Band 1 response.
2B	A12R48	5-28	Adjusts slope of Band 2 response.
3B	A12R49	5-28	Adjusts slope of Band 3 response.
4B	A12R51	5-28	Adjusts slope of Band 4 response.
5B	A12R53	5-28	Adjusts slope of Band 5 response.
5C	A12R54	5-28	Adjusts high-end breakpoint in slope of Band 5 response.
6B	A12R55	5-28	Adjusts slope of Band 6 response.
6C	A12R56	5-28	Adjusts high-end breakpoint in slope of Band 6 response.
1A	A12R57	5-28	Adjusts gain of Band 1.
2A	A12R58	5-28	Adjusts gain of Band 2.
3A	A12R59	5-28	Adjusts gain of Band 3.
4A	A12R60	5-28	Adjusts gain of Band 4.
5A	A12R61	5-28	Adjusts gain of Band 5.
6A	A12R62	5-28	Adjusts gain of Band 6.
v3+	A12R70	5-28	Adjusts diode bias for Band 6.
v 3–	A12R71	5-28	Adjusts diode bias for Band 5.
V1	A12R72	5-28	Adjusts diode bias for Bands 1 and 2.
v 2–	A12R83	5-28	Adjusts diode bias for Band 3.
v2+	A12R87	5-28	Adjusts diode bias for Band 4.
SYM	A13C15	5-21	Adjusts symmetry of first crystal bandwidth filter stage.

TABLE 5-2. RELATED ADJUSTMENTS

Assembly Replaced or Repaired		Perform the Following Related Adjustments	Paragraph Number
A1A1	DPM Display	Frequency Display Adjustments	5-30
A1A2	DPM Driver	Frequency Display Adjustments	5-30
A2	Front Panel Switch Assembly	First Converter Adjustments	5-25
		CAL OUTPUT and REF LEVEL CAL Adjustments	5-29
A3	Input Attenuator	Frequency Response Adjustments	5-28
A4	First Mixer	First Converter Adjustments	5-25
		Frequency Response Adjustments	5-28
		CAL OUTPUT and REF LEVEL CAL Adjustments	5-29
A5	Second Converter	Second Converter Adjustments	5-26
		CAL OUTPUT and REF LEVEL CAL Adjustments	5-29
A6	YIG-Tuned Oscillator	First Converter Adjustments	5-25
		Frequency Response Adjustments	5-28
		CAL OUTPUT and REF LEVEL CAL Adjustments	5-29
A7	Frequency Control	Power Supply Checks and Adjustments	5-17
		First Converter Adjustments	5-25
A8	Marker	First Converter Adjustments	5-25
A9	Sweep Generator/ Bandwidth Control	Power Supply Checks and Adjustments	5-17
		Calibrated Sweep Time Adjustments	5-18
		3-dB Bandwidth Adjustments	5-22
A10	Third Converter	Third Converter Adjustments	5-27
		CAL OUTPUT and REF LEVEL CAL Adjustments	5-29
A11, A13*	Bandwidth Filters	Bandwidth Filter Adjustments	5-21
		3-dB Bandwidth Adjustments	5-22
A12	Step Gain	RF Gain Adjustments	5-23
		Step Gain Adjustments	5-24
		CAL OUTPUT and REF LEVEL CAL Adjustments	5-29
A14	Log Amplifier	Log Amplifier Log and Linear Adjustments	5-19
		1-dB Offset Adjustment	5-20
		CAL OUTPUT and REF LEVEL CAL Adjustments	5-29
A15	Vertical Driver/ Blanking	I-dB Offset Adjustment	5-20
A16	Motherboard	No related adjustments	

*A11 and A13 bandwidth filter assemblies contain a matched set of crystals. These two assemblies must be treated as a matched pair when replacement is necessary.

TABLE 5-3. FACTORY SELECTED COMPONENTS IN ALPHA-NUMERICAL ORDER

Reference Designator	Basis of Selection
A1A2R1	Adjusts bias on DPM Clock Oscillator.
A7C12	Selected to provide delay compensation for main coil sweeps.
A7R59	Adjusts YTO sweep linearity.
A7R60	Adjusts YTO sweep linearity.
A7R96	Selected to provide delay compensation for FM coil swept spans.
A7R106	Selected to optimize Main Coil Span Accuracy.
A7R107	Selected to optimize Main Coil Span Accuracy.
A8R94	Shifts adjustment range of A8R34 REG.
A9R42	Selected to set low end of sweep ramp.
A9R47	Selected to set high end of sweep ramp.
A9R109	Selected to optimize 1 kHz Bandwidth.
A9R110	Selected to optimize 3 kHz Bandwidth.
A9R111	Selected to optimize 10 kHz Bandwidth.
A9R116	Selected to optimize 300 kHz Bandwidth.
A9R118	Selected to optimize 1 MHz Bandwidth.
A9R120	Selected to optimize 3 MHz Bandwidth.
A10R25	Adjusts gain of Flatness Compensation Amplifier to compensate for gain of A12 flatness circuitry.
A11C16	Selected to shift adjustment range of A11C23. Should be same value as A11C20.
A11C20	Selected to shift adjustment range of A11C23. Should be same value as A11C16.
A11C43	Selected to shift adjustment range of A11C45. Should be same value as A11C64.
A11C64	Selected to shift adjustment range of A11C45. Should be same value as A11C43.
A11R7	Adjusts XTAL bandwidth amplitudes relative to LC amplitudes.
A11R19	Selected to give correct IF bandwidth for RESOLUTION BW of 100 kHz.
A11R23	Selected to give correct IF bandwidth for RESOLUTION BW of 30 kHz.
A11R32	Selected to shift adjustment range of A11R26.
A11R43	Selected to give correct IF bandwidth for RESOLUTION BW of 100 kHz.
A11R48	Selected to give correct IF bandwidth for RESOLUTION BW of 30 kHz.
A11R56	Selected to equalize feedback between LC stages (not field selectable).
A12C26	Selected to optimize 3 MHz to 1 MHz bandwidth amplitude and frequency correlation.
A12R50	Adjusts Band 3 breakpoint for frequency response.
A12R73	Shifts adjustment range of A12R72 V1.
A12R74	Shifts adjustment range of A12R71 V3–.
A12R75	Shifts adjustment range of A12R70 V3+.
A12R80	Adjusts reference voltage to A12U2 for diode bias.
A12R84	Shifts adjustment range of A12R83 V2–.
A12R88	Shifts adjustment range of A12R87 V2+.
A13C16	Selected to shift adjustment range of A13C23. Should be same value as A13C20.
A13C20	Selected to shift adjustment range of A13C23. Should be same value as A13C16.
A13C43	Selected to shift adjustment range of A13C45. Should be same value as A13C64.
A13C64	Selected to shift adjustment range of A13C45. Should be same value as A13C43.
A13R7	Adjusts XTAL bandwidth amplitudes relative to LC amplitutles.
A13R19	Selected to give correct IF bandwidth for RESOLUTION BW of 100 kHz.
A13R23	Selected to give correct IF bandwidth for RESOLUTION BW of 30 kHz.
A13R32	Selected to shift adjustment range of A13R26.
A13R43	Selected to give correct IF bandwidth for RESOLUTION BW of 100 kHz.
A13R48	Selected to give correct IF bandwidth for RESOLUTION BW of 30 kHz.
A13R56	Selected to equalize feedback between LC stages (not field selectable).
A14R93	Selected to shift adjustment range of A11R34.
A14R101	Selected to shift adjustment range of A11R34.
A14R107	Selected to shift adjustment range of A11R23.
A15R26	Selected to provide increased range adjustment for 1 dB offset circuit.

TABLE 5-4. HP PART NUMBERS OF STANDARD VALUE REPLACEMENT COMPONENTS (1 OF 3)

CAPACITORS

RANGE: 1 to 24 pF
TYPE: Tubular
TOLERANCE:
1 to 9.1 pF = ±.25 pF
10 to 24 pF = ±5%

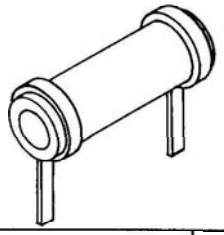

RANGE: 27 to 680 pF
TYPE: Dipped Mica
TOLERANCE: ±5%

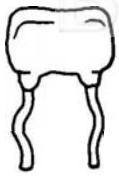

Value (pF)	HP Part Number	CD
1.0	0160-2236	8
1.2	0160-2237	9
1.5	0150-0091	8
1.8	0160-2239	1
2.0	0160-2240	4
2.2	0160-2241	5
2.4	0160-2242	6
2.7	0160-2243	7
3.0	0160-2244	8
3.3	0150-0059	8
3.6	0160-2246	0
3.9	0160-2247	1
4.3	0160-2248	2
4.7	0160-2249	3
5.1	0160-2250	6
5.6	0160-2251	7
6.2	0160-2252	8
6.8	0160-2253	9
7.5	0160-2254	0
8.2	0160-2255	1
9.1	0160-2256	2
10.0	0160-2257	3
11.0	0160-2258	4
12.0	0160-2259	5
13.0	0160-2260	8
15.0	0160-2261	9
16.0	0160-2262	0
18.0	0160-2263	1
20.0	0160-2264	2
22.0	0160-2265	3
24.0	0160-2266	4

Value (pF)	HP Part Number	CD
27	0160-2306	3
30	0160-2199	2
33	0160-2150	5
36	0160-2308	5
39	0140-0190	7
43	0160-2200	6
47	0160-2307	4
51	0160-2201	7
56	0140-0191	8
62	0140-0205	5
68	0140-0192	9
75	0160-2202	8
82	0140-0193	0
91	0160-2203	9
100	0160-2204	0
110	0140-0194	1
120	0160-2205	1
130	0140-0195	2
150	0140-0196	3
160	0160-2206	2
180	0140-0197	4
200	0140-0198	5
220	0160-0134	1
240	0140-0199	6
270	0140-0210	2
300	0160-2207	3
330	0160-2208	4
360	0160-2209	5
390	0140-0200	0
430	0160-0939	4
470	0160-3533	0
510	0160-3534	1
560	0160-3535	2
620	0160-3536	3
680	0160-3537	4

TABLE 5-4. HP PART NUMBERS OF STANDARD VALUE REPLACEMENT COMPONENTS (2 OF 3)

RESISTORS

RANGE: 10 to 464K Ohms
TYPE: Fixed-Film
WATTAGE: .125 at 125°C
TOLERANCE: ±1.0%

Value (Ω)	HP Part Number	CD	Value (Ω)	HP Part Number	CD	Value (Ω)	HP Part Number	CD
10.0	0757-0346	2	464	0698-0082	7	21.5K	0757-0199	3
11.0	0757-0378	0	511	0757-0416	7	23.7K	0698-3158	4
12.1	0757-0379	1	562	0757-0417	8	26.1K	0698-3159	5
13.3	0698-3427	0	619	0757-0418	9	28.7K	0698-3449	6
14.7	0698-3428	1	681	0757-0419	0	31.6K	0698-3160	8
16.2	0757-0382	6	750	0757-0420	3	34.8K	0757-0123	3
17.8	0757-0294	9	825	0757-0421	4	38.3K	0698-3161	9
19.6	0698-3429	2	909	0757-0422	5	42.2K	0698-3450	9
21.5	0698-3430	5	1.0K	0757-0280	3	46.4K	0698-3162	0
23.7	0698-3431	6	1.1K	0757-0424	7	51.1K	0757-0458	7
26.1	0698-3432	7	1.21K	0757-0274	5	56.2K	0757-0459	8
28.7	0698-3433	8	1.33K	0757-0317	7	61.9K	0757-0460	1
31.6	0757-0180	2	1.47K	0757-1094	9	68.1K	0757-0461	2
34.8	0698-3434	9	1.62K	0757-0428	1	75.0K	0757-0462	3
38.3	0698-3435	0	1.78K	0757-0278	9	82.5K	0757-0463	4
42.2	0757-0316	6	1.96K	0698-0083	8	90.9K	0757-0464	5
46.4	0698-4037	0	2.15K	0698-0084	9	100K	0757-0465	6
51.1	0757-0394	0	2.37K	0698-3150	6	110K	0757-0466	7
56.2	0757-0395	1	2.61K	0698-0085	0	121K	0757-0467	8
61.9	0757-0276	7	2.87K	0698-3151	7	133K	0698-3451	0
68.1	0757-0397	3	3.16K	0757-0279	0	147K	0698-3452	1
75.0	0757-0398	4	3.48K	0698-3152	8	162K	0757-0470	3
82.5	0757-0399	5	3.83K	0698-3153	9	178K	0698-3243	8
90.9	0757-0400	9	4.22K	0698-3154	0	196K	0698-3453	2
100	0757-0401	0	4.64K	0698-3155	1	215K	0698-3454	3
110	0757-0402	1	5.11K	0757-0438	3	237K	0698-3266	5
121	0757-0403	2	5.62K	0757-0200	7	261K	0698-3455	4
133	0698-3437	2	6.19K	0757-0290	5	287K	0698-3456	5
147	0698-3438	3	6.81K	0757-0439	4	316K	0698-3457	6
162	0757-0405	4	7.50K	0757-0440	7	348K	0698-3458	7
178	0698-3439	4	8.25K	0757-0441	8	383K	0698-3459	8
196	0698-3440	7	9.09K	0757-0288	1	422K	0698-3460	1
215	0698-3441	8	10.0K	0757-0442	9	464K	0698-3260	9
237	0698-3442	9	11.0K	0757-0443	0			
261	0698-3132	4	12.1K	0757-0444	1			
287	0698-3443	0	13.3K	0757-0289	2			
316	0698-3444	1	14.7K	0698-3156	2			
348	0698-3445	2	16.2K	0757-0447	4			
383	0698-3446	3	17.8K	0698-3136	8			
422	0698-3447	4	19.6K	0698-3157	3			

TABLE 5-4. HP PART NUMBERS OF STANDARD VALUE REPLACEMENT COMPONENTS (3 OF 3)

RESISTORS

RANSE: 10 to 1.47M Ohms
TYPE: Fixed-Film
WATTAGE: .5 at 125°C
TOLERANCE: ±1%

Value (Ω)	HP Part Number	C D	Value (Ω)	HP Part Number	C D	Value (Ω)	HP Part Number	C D	Value (Ω)	HP Part Number	C D
10.0	0757-0984	4	215	0698-3401	0	4.64K	0698-3348	4	110K	0757-0859	2
11.0	0575-0985	5	237	0698-3102	8	5.11K	0757-0833	2	121K	0757-0860	5
12.1	0757-0986	6	261	0757-1090	5	5.62K	0757-0834	3	133K	0757-0310	0
13.3	0757-0001	6	287	0757-1092	7	6.19K	0757-0196	0	147K	0698-3175	5
14.7	0698-3388	2	316	0698-3402	1	6.81K	0757-0835	4	162K	0757-0130	2
16.2	0757-0989	9	348	0698-3403	2	7.50K	0757-0836	5	178K	0757-0129	9
17.8	0698-3389	3	383	0698-3404	3	8.25K	0757-0837	6	196K	0757-0063	0
19.6	0698-3390	6	422	0698-3405	4	9.09K	0757-0838	7	215K	0757-0127	7
21.5	0698-3391	7	464	0698-0090	7	10.0K	0757-0839	8	237K	0698-3424	7
23.7	0698-3392	8	511	0757-0814	9	12.1K	0757-0841	2	261K	0757-0064	1
26.1	0757-0003	8	562	0757-0815	0	13.3K	0698-3413	4	287K	0757-0154	0
28.7	0698-3393	9	619	0757-0158	4	14.7K	0698-3414	5	316K	0698-3425	8
31.6	0698-3394	0	681	0757-0816	1	16.2K	0757-0844	5	348K	0757-0195	9
34.8	0698-3395	1	750	0757-0817	2	17.8K	0698-0025	8	383K	0757-0133	5
38.3	0698-3396	2	825	0757-0818	3	19.6K	0698-3415	6	422K	0757-0134	6
42.2	0698-3397	3	909	0757-0819	4	21.5K	0698-3416	7	464K	0698-3426	9
46.4	0698-3398	4	1.00K	0757-0159	5	23.7K	0698-3417	8	511K	0757-0135	7
51.1	0757-1000	7	1.10K	0757-0820	7	26.1K	0698-3418	9	562K	0757-0868	3
56.2	0757-1001	8	1.21K	0757-0821	8	28.7K	0698-3103	9	619K	0757-0136	8
61.9	0757-1002	9	1.33K	0698-3406	5	31.6K	0698-3419	0	681K	0757-0869	4
68.1	0757-0794	4	1.47K	0757-1078	9	34.8K	0698-3420	3	750K	0757-0137	9
75.0	0757-0795	5	1.62K	0757-0873	0	38.3K	0698-3421	4	825K	0757-0870	7
82.5	0757-0796	6	1.78K	0698-0089	4	42.2K	0698-3422	5	909K	0757-0138	0
90.0	0757-0797	7	1.96K	0698-3407	6	46.4K	0698-3423	6	1M	0757-0059	4
100	0757-0198	2	2.15K	0698-3408	7	51.1K	0757-0853	6	1.1M	0757-0139	1
110	0757-0798	8	2.37K	0698-3409	8	56.2K	0757-0854	7	1.21M	0757-0871	8
121	0757-0799	9	2.61K	0698-0024	7	61.9K	0757-0309	7	1.33M	0757-0194	8
133	0698-3399	5	2.87K	0698-3101	7	68.1K	0757-0855	8	1.47M	0698-3464	5
147	0698-3400	9	3.16K	0698-3410	1	75.0K	0757-0856	9			
162	0757-0802	5	3.48K	0698-3411	2	82.5K	0757-0857	0			
178	0698-3334	8	3.83K	0698-3412	3	90.9K	0757-0858	1			
196	0757-1060	9	4.22K	0698-3346	2	100K	0757-0367	7			

ADJUSTMENTS

5-17. POWER SUPPLY CHECKS AND ADJUSTMENTS

REFERENCE:

A7, A8, A9 Schematics

DESCRIPTION:

The +14.5V and −10V regulated power supplies on Frequency Control Assembly A7 are adjusted. The (dependent) −12V power supply is then checked for proper dc output (with less than ±50 mV variation) while the spectrum analyzer is tuned from 10 MHz to 3 GHz. The +10V power supply on Sweep Generator/Bandwidth Control Assembly A9 and the VO (Varactor Offset) voltage on Marker Assembly A8 are then adjusted. Both the +10V power supply voltage and the VO voltage are temperature-dependent and must be adjusted during the first five minutes after the spectrum analyzer is turned on (cold instrument).

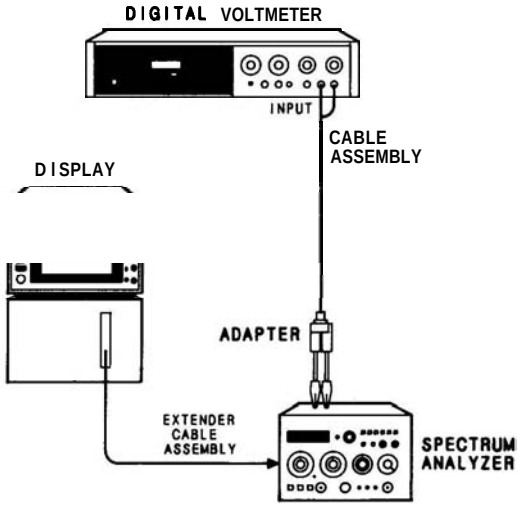

FIGURE 5-1. POWER SUPPLY CHECKS AND ADJUSTMENTS TEST SETUP

EQUIPMENT:

Digital Voltmeter	HP 3456A
Extender Cable	HP 5060-0303
Cable Assembly, BNC (m) to Banana Plug	HP 11001A
Adapter, BNC (f) to Alligator Clips	HP 8120-1292

ADJUSTMENTS

5-17. POWER SUPPLY CHECKS AND ADJUSTMENTS (Cont'd)

PROCEDURE:

1. Set spectrum analyzer controls as follows:

FREQUENCY BAND GHz	.01 – 3
TUNING	0.010 GHz
FREQ SPAN/DIV	F (full)
RESOLUTION BW	Optimum, coupled
INPUT ATTEN	10 dB
REFERENCE LEVEL	0 dBm
REFLEVELFINE	0
Amplitude Scale	10 dB/DIV
SWEEP TIME/DIV	MAN
SWEEPTRIGGER	FREE RUN
ALTIF	OFF
SIGIDENT	OFF
BLCLIP	OFF
VIDEOFILTER	OFF

NOTE

In all following adjustments, connect negative terminal of digital voltmeter to spectrum analyzer chassis unless otherwise instructed.

2. Connect equipment as shown in Figure 5-1. Install Frequency Control Assembly A7 on extender board and connect digital voltmeter to +14.5V test points A7TP3.

3. Adjust +14.5V potentiometer A7R41 for a voltmeter indication of +14.500 ±0.002 Vdc.

4. Connect digital voltmeter to –10V test point A7TP2 and adjust –10V potentiometer A7R29 for a voltmeter indication of –10.000 ±0.005 Vdc.

5. Use digital voltmeter to check for –12.0 ±0.1 Vdc at collector (case) of transistor A7Q7, located near center of Frequency Control Assembly A7. Vary MAN SWEEP control over entire range and verify that voltage indication varies no more than ±0.05 Vdc.

6. Remove extender board and reinstall Frequency Control Assembly A7.

ADJUSTMENTS

5-17. POWER SUPPLY CHECKS AND ADJUSTMENTS (Cont'd)

NOTE

The two following voltage adjustments, +10V and VO (Varactor Offset), must be performed while the spectrum analyzer is still cold (during first five minutes after turn-on). If the instrument has been operating longer than five minutes, turn off the display mainframe, remove A8 and A9 assemblies, and let them cool on bench for 15 minutes. Replace the two assemblies and proceed with adjustment of **A9R2** and **A8R62** during the first five minutes after turn-on.

7. Connect digital voltmeter to +10V test point A9TP7 and adjust +10V potentiometer A9R2 for a voltmeter indication of +10.000 ±0.100 Vdc.

8. Connect digital voltmeter to VO test point A8TP2. Set spectrum analyzer SWEEP TIME/DIV control to 10 ms and SWEEP TRIGGER control to SINGLE. Turn ALT IF and SIG IDENT on (pushbuttons depressed).

9. Voltage at A8TP2 will alternate between two values each time a sweep is triggered. Trigger sweep a few times until voltmeter indicates least negative VO voltage. Adjust VO potentiometer A8R62 for a voltmeter indication of −2.00 ±0.10 Vdc.

ADJUSTMENTS

5-18. CALIBRATED SWEEP TIME ADJUSTMENT

REFERENCE:

A9 Schematic

DESCRIPTION:

A counter is used to adjust the time interval of the 1 millisecond per division and 5 milliseconds per division sweep times. Calibrated sweep times from 0.1 milliseconds through 50 milliseconds are then checked using the counter time-interval (T.I.) function.

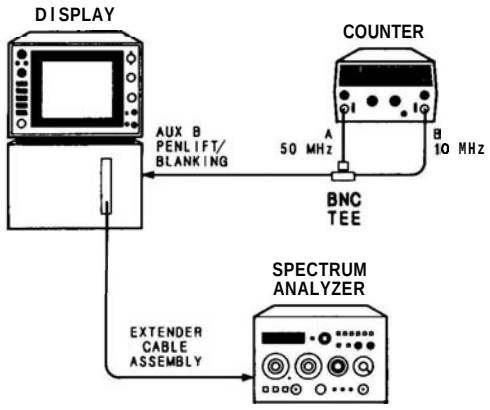

FIGURE 5-2. CALIBRATED SWEEP TIME ADJUSTMENT TEST SETUP

EQUIPMENT:

50 MHz Universal Counter	HP 5300B/5302A
Extender Cable Assembly	HP 5060-0303
BNC Tee	HP 1250-0781

PROCEDURE:

NOTE

Since the calibrated sweep time adjustments are dependent on the +14.5V and −10V power supplies, the Power Supply Checks and Adjustments (paragraph 5-17) should be performed before starting this procedure.

ADJUSTMENTS

5-18. CALIBRATED SWEEP TIME ADJUSTMENT (Cont'd)

1. Set equipment controls as follows:

NOTE

If an HP 853A Spectrum Analyzer Display mainframe is used, and a sweep time faster than 10 msec is selected, an error message will appear on the analyzer's CRT and the analyzer will go into mixed mode.

Spectrum Analyzer:

FREQUENCY BAND GHz	.01 – 3
TUNING	>0.010 GHz
FREQ SPAN/DIV	F (full)
RESOLUTION BW	Optimum, coupled
INPUT ATTEN	10 dB
REFERENCE LEVEL	0 dBm
REFLEVELFINE	0
Amplitude Scale	10 dB/DIV
SWEEP TIME/DIV	1 msec
SWEEP TRIGGER	FREE RUN
ALTIF	OFF
SIGIDENT	OFF
BLCLIP	OFF
VIDEOFILTER	OFF

50 MHz Universal Counter:

FUNCTION	TI. A to B
SAMPLE RATE	Full counterclockwise
TIME BASE	10 μs
SENSITIVITY (A)	9 o'clock
A 50 MHz INPUT	⊓⊔ (falling edge)
SENSITIVITY (B)	9 o'clock
B 10 MHz INPUT	⊔⊓ (rising edge)

2. Connect equipment as shown in Figure 5-2.

3. Adjust counter SENSITIVITY controls (both channels) as necessary until counter triggers and indicates a time interval of approximately 10.00 ms.

4. Adjust 1 ms potentiometer A9R10 for a time interval indication of 10.00 ± 0.80 ms.

ADJUSTMENTS

5-18. CALIBRATED SWEEP TIME ADJUSTMENT (Cont'd)

NOTE

In early instruments, A9R13 is labeled "2 ms." The adjustment of A9R13, however, should be performed with SWEEP TIME/DIV set at 5 ms.

5. Set spectrum analyzer SWEEP TIME/DIV control to 5 msec. Readjust counter SENSITIVITY controls as necessary and adjust 5 ms potentiometer A9R13 for a time interval indication of **50.00 ±4.00** ms.

6. Check time interval for each SWEEP TIME/DIV control setting listed in Table **5-5.** Readjust 1 ms potentiometer A9R10 and 5 ms potentiometer A9R13 as necessary if test limits are exceeded.

TABLE 5-5. CALIBRATED SWEEP TIME TEST LIMITS

SWEEP TIME/DIV Setting	Sweep Time (ms)
.1 ms	1.00 ± 0.10
.2 ms	2.00 ± 0.20
.5 ms	5.00 ± 0.40
1 ms	10.00 ± 0.80
2 ms	20.00 ± 1.50
5 ms	50.00 ± 4.00
10 ms	100.00 ± 8.00
20 ms	200.00 ± 16.00
50 ms	500.00 ± 40.00

ADJUSTMENTS

5-19. LOG AMPLIFIER LOG AND LINEAR ADJUSTMENTS

REFERENCE:

A14 and A15 Schematics

DESCRIPTION:

Step attenuators are used to change the level of the input signal to the spectrum analyzer in calibrated steps. The output of Vertical Driver and Blanking Assembly A15 is monitored, and adjustments are performed to calibrate Log Amplifier Assembly A14.

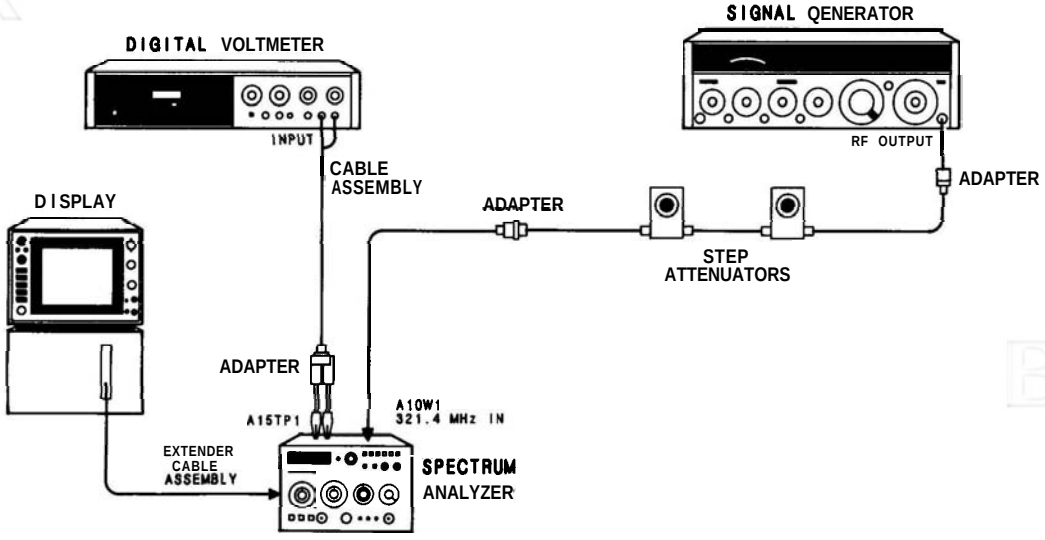

FIGURE 53. LOG AMPLIFIER LOG AND LINEAR ADJUSTMENTS TEST SETUP

EQUIPMENT:

Signal Generator	HP 8640B
Digital Voltmeter	HP 3456A
Step Attenuator (10-dB/step)	HP 355D, Opt. H82
Step Attenuator (1-dB/step)	HP 355C, Opt. H80
Cable Assembly, Banana Plug to BNC (m)	HP 11001A
Adapter, Type N (m) to BNC (f)	HP 1250-0780
Adapter, SMC (m) to BNC (f)	HP 1250-0832
Extender Cable Assembly	HP 5060-0303

ADJUSTMENTS

5-19. LOG AMPLIFIER LOG AND LINEAR ADJUSTMENTS (Cont'd)

PROCEDURE:

1. Set equipment controls as follows:

Spectrum Analyzer:

FREQUENCY BAND GHz	.01 – 3
TUNING	>0.010 GHz
FREQ SPAN/DIV	0
RESOLUTION BW	300 kHz, uncoupled
INPUTATTEN	10 dB
REFERENCELEVEL	– 50 dBm
REFLEVELFINE	0
Amplitude Scale	LIN
SWEEP TIME/DIV	AUTO
SWEEPTRIGGER	FREE RUN
ALTIF	OFF
SIG IDENT	OFF
BLCLIP	OFF
VIDEOFILTER	OFF

Signal Generator:

COUNTERMODE	INT
AM	OFF
FM	OFF
FREQUENCY TUNE	321.4 MHz
RF	ON
OUTPUTLEVEL	approx. – 28 dBm

2. Set 1-dB step attenuator to 10 dB and 10-dB step attenuator to 0 dB. Remove AlOWl (blue cable) from A5J2 and connect equipment as shown in Figure 5-3, using adapter to connect step attenuator to A10W1.

NOTE

The HP 355C 10 dB attenuation is included to compensate for 10 dB of gain on Step Gain Assembly A12 with the TEST-NORM switch in TEST.

3. Set TEST-NORM switch on Step Gain Assembly A12 to TEST position. Adjust signal generator FREQUENCY TUNE control for maximum signal amplitude on display with 10-dB step attenuator set to 0 dB (reduce signal generator OUTPUT LEVEL control setting as necessary to bring signal on-screen).

ADJUSTMENTS

5-19. LOG AMPLIFIER LOG AND LINEAR ADJUSTMENTS (Cont'd)

4. Disconnect signal generator output from step attenuator. Adjust spectrum analyzer VERTICAL POSN control to position signal trace at bottom CRT graticule line. Measure dc offset voltage at A15TP1 and record.

_____mV

5. Connect signal generator to step attenuator and adjust signal generator FINE TUNE control to peak signal on CRT display.

6. Adjust signal generator OUTPUT LEVEL for digital voltmeter (DVM) reading (±1 mV) of 800 mV plus offset recorded in step 4, as measured at A15TP1. Adjust spectrum analyzer VERTICAL GAIN control to position signal trace at top graticule line.

7. Set spectrum analyzer Amplitude Scale control to 10 dB/DIV.

8. Set 10-dB step attenuator to 0 dB and adjust SLOPE potentiometer A14R23 for DVM reading (±1 mV) of 800 mV plus offset recorded in step 4, as measured at A15TP1.

9. Set 10-dB step attenuator to 60 dB and adjust OFFSET potentiometer A14R10 for DVM reading (±1 mV) of 200 mV plus offset recorded in step 4, as measured at A15TP1.

10. Repeat steps 8 and 9 until no further adjustment is necessary.

11. Set 10-dB step attenuator to 30 dB and adjust SLOPE potentiometer A14R23 for DVM reading (±1 mV) of 500 mV plus offset recorded in step 4, as measured at A15TP1.

12. Set 10-dB step attenuator to 60 dB and adjust OFFSET potentiometer A14R10 for DVM reading (±1 mV) of 200 mV plus offset recorded in step 4.

13. Repeat steps 11 and 12 until no further adjustment is necessary.

14. Set 10-dB step attenuator to 10 dB and adjust –30 dB potentiometer A14R69 for DVM reading (±1 mV) of 700 mV plus offset recorded in step 4.

15. Set 10-dB step attenuator to 0 dB and adjust –10 dB potentiometer A14R39 for DVM reading (±1 mV) of 800 mV plus offset recorded in step 4.

16. Set 10-dB step attenuator to 60 dB and adjust OFFSET potentiometer A14R10 for DVM reading (±1 mV) of 200 mV plus offset recorded in step 4.

17. Set 10-dB step attenuator to 0 dB and adjust SLOPE potentiometer A14R23 for DVM reading (±1 mV) of 800 mV plus offset recorded in step 4.

18. Repeat steps 16 and 17 until no further adjustment is necessary.

19. Check log fidelity per Table 5-6. If test limits are not met, repeat steps 8 through 18.

ADJUSTMENTS

5-19. LOG AMPLIFIER LOG AND LINEAR ADJUSTMENTS (Cont'd)

TABLE 5-6. LOG FIDELITY CHECK

Step Attenuator Setting (dB)	DVM Reading (mV)	Corrected DVM Reading* (mV)	Test Limits (mV)	Theoretical Reading (mV)	Theoretical Reading Subtracted from Corrected DVM Reading (mV)	Difference Between Adjacent Readings** (mV)
0	_____	_____	800 ± 1	800	_____	
10	_____	_____	700 ± 3	700	_____	_____
20	_____	_____	600 ± 4	600	_____	_____
30	_____	_____	500 ± 4	500	_____	_____
40	_____	_____	400 ± 5	400	_____	_____
50	_____	_____	300 ± 6	300	_____	_____
60	_____	_____	200 ± 7	200	_____	_____
70	_____	_____	100 ± 8	100	_____	_____

* DVM reading minus offset recorded in step 4.
**All values in the Difference Between Adjacent Readings column must be less than or equal to ± 10 mV.

Example (+5 mV offset):

TABLE 5-7. SAMPLE COMPUTATIONS OF AMPLITUDE LOG DISPLAY ACCURACY

Step Attenuator Setting (dB)	DVM Reading (mV)	Corrected DVM Reading* (mV)	Theoretical Reading (mV)	Theoretical Reading Subtracted from Corrected DVM Reading (mV)	Difference Between Adjacent Readings** (mV)
0	+805	+800	+800	0	
10	+708	+703	+700	+3	−3
20	+599	+594	+600	−6	+9
30	+497	+492	+500	−8	+2
40	+406	+401	+400	+1	−9

* DVM Reading minus offset recorded in step 4.
** All values in the Difference Between Adjacent Readings column must be less than or equal to ± 10 mV.

ADJUSTMENTS

5-19. LOG AMPLIFIER LOG AND LINEAR ADJUSTMENTS (Cont'd)

Linear Output and Linear Step Gain

20. Disconnect A10W1 from step attenuator and reconnect to A5J2.

CAUTION

When reconnecting A10W1 to A5J2, do not tighten to over 6 inch pounds of torque; A5J2 can be damaged if the connector is overtightened.

Set spectrum analyzer controls as follows:

INPUT ATTEN ..... 10 dB
REFERENCE LEVEL ..... –50 dBm
FREQ SPAN/DIV 0
TUNING ..... 30 MHz

Set signal generator controls as follows:

OUTPUT LEVEL ..... approx. –5 dBm
FREQUENCY ..... 30 MHz

Set 10-dB step attenuator to 0 dB.

21. Remove adapter from step attenuator and connect step attenuator to spectrum analyzer input. Adjust the signal generator OUTPUT LEVEL for a DVM reading (±1 mV) of 800 mV plus offset recorded in step 4 (measured at A15TP1).

22. Set spectrum analyzer amplitude scale for Linear display (LIN) and adjust LIN control A14R34 for DVM reading (±1 mV) of 800 mV plus offset recorded in step 4.

23. Make adjustments indicated in Table 5-8, then recheck that all steps meet the DVM test limits. Between adjustments, recheck tuning of spectrum analyzer to be certain signal remains peaked.

TABLE 5-8. LINEAR GAIN ADJUSTMENTS

Adjustment	Step Attenuator	Reference Level (dBm)	DVM Reading*
A14R34	0	–50	Ref: 800 ±1 mV
A14R33	10	–60	800 ±5 mV
A14R30	20	–70	800 ±5 mV
A14R27	30	–80	800 ±5 mV
No adjustment	40	–90	800 ±20 mV

*After subtracting offset.

ADJUSTMENTS

5-19. LOG AMPLIFIER LOG AND LINEAR ADJUSTMENTS(Cont'd)

Log Gain

24. Set spectrum analyzer controls as follows:

REFERENCE LEVEL ..... – 50 dBm
Amplitude Scale ..... 1 db/DIV

25. Set 10-dB step attenuator to 0 dB. Retune spectrum analyzer to peak signal. Adjust signal generator OUTPUT LEVEL for DVM reading (± 1 mV) of 800 mV plus offset recorded in step 4, as measured at A15TP1.

26. Set 10-dB step attenuator to 40 dB. Set REFERENCE LEVEL to –90 dBm and adjust LOG GAIN control A14R121 for DVM reading of 800 mV plus offset recorded in step 4, as measured at A15TP1.

27. Check log gain steps according to Table 5-9. If limits are not met, repeat steps 25 through **27.** If limits still are not met, return to step 1.

TABLE 59. LOG GAIN ADJUSTMENT LIMITS

Step Attenuator	Reference Level (dBm)	DVM Reading*
0	–50	Ref: 800 ±1 mV
10	–60	800 +30 mV
20	–70	800 +30 mV
30	–80	800 +30 mV
40	–90	800 +30 mV

*After subtracting offset.

28. Set spectrum analyzer controls as follows:

REFERENCELEVEL ..... – 50 dBm
Amplitude Scale ..... 1 dB/DIV

29. Set both step attenuators to 0 dB. Reduce signal generator OUTPUT LEVEL until signal appears at top of display. Adjust spectrum analyzer FINE TUNE to peak trace on display and adjust signal generator OUTPUT LEVEL for DVM reading (± 1 mV) of 800 mV plus offset recorded in step 4, as measured at A15TP1. Increase attenuation in 1-dB steps as shown in Table 5-10 and take DVM readings to check log amplifier output.

30. Return TEST-NORM switch A12S1 to NORM.

ADJUSTMENTS

5-19. LOG AMPLIFIER LOG AND LINEAR ADJUSTMENTS (Cont'd)

TABLE 5-10. LOG AMPLIFIER OUTPUT LIMITS

Step Attenuator Setting (dB)	DVM Reading (mV)	Corrected DVM Reading* (mV)	Test Limits (mV)	Theoretical Reading (mV)	Theoretical Reading Subtracted from Corrected DVM Reading (mV)	Difference Between Adjacent Readings** (mV)
0			800 ±1	+800	0	
1			700 ±10	+700		
2			600 ±20	+600		
3			500 ±30	+500		
4			400 ±30	+400		
5			300 ±30	+300		
6			200 ±30	+200		
7			100 ±30	+100		

* DVM Reading minus offset.
**All values in the Difference Between Adjacent Readings column must be less than or equal to ±10 mV

ADJUSTMENTS

5-20. 1-dB OFFSET ADJUSTMENT

REFERENCE:

A15 Schematic

DESCRIPTION:

Reference is set in 10 dB/DIV amplitude scale and 1 dB offset is adjusted in 1 dB/DIV for the same full display reference.

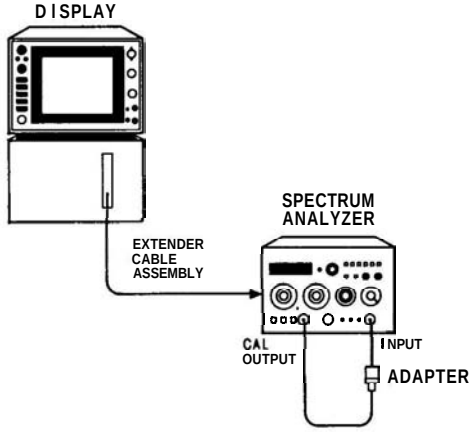

FIGURE 5-4. 1-dB OFFSET ADJUSTMENTTEST SETUP

EQUIPMENT:

Adapter, Type N (m) to BNC (f)	HP 1250-0780
Extender Cable Assembly	HP 5060-0303
BNC Cable, 9-Inch	HP 10502A

PROCEDURE:

1. Set spectrum analyzer controls as follows:

FREQUENCY BAND GHz	.01 – 3
TUNING	>60 MHz
FREQ SPAN/DIV	1 MHz
RESOLUTION BW	1 MHz, uncoupled
INPUTATTEN	10 dB
REFERENCE LEVEL	0 dBm
REFLEVELFINE	0
Amplitude Scale	LIN
SWEEP TIME/DIV	AUTO
SWEEP TRIGGER	FREE RUN
ALTIF	OFF
SIG IDENT	OFF
BLCLIP	OFF
VIDEOFILTER	OFF

ADJUSTMENTS

5-20. 1-dB OFFSET ADJUSTMENT (Cont'd)

2. Connect equipment as shown in Figure 5-4.

3. Adjust vertical position to align trace on bottom graticule.

4. Set tuning to 35 MHz. Set TUNING control to center the trace on the display. Set REF LEVEL FINE for a full-screen trace (signal at top graticule line).

5. Set Amplitude Scale to 10 dB/DIV. Adjust VERT GAIN if necessary for full screen trace.

6. Repeat steps 3 and 4 until the trace is full screen in both LIN and 10 dB/DIV.

NOTE

1 **dB/DIV** will read approximately 0.5 dB (0.5 division) low when using extender cable assembly. Adjusting **A15R1** 1 dB OFFSET for a trace 0.5 division down from top graticule line should place signal at top graticule line when HP **8559A** is properly installed in display mainframe.

7. Set Amplitude Scale to 1 dB/DIV. Adjust A15R1 1 dB OFFSET for a trace 0.5 division down from top graticule line.

ADJUSTMENTS

5-21. BANDWIDTH FILTER ADJUSTMENTS

REFERENCE:

A9, A11, and A13 Schematics

DESCRIPTION:

The crystal and LC bandwidth filter circuits are adjusted for symmetry, center, and peak. The 3-dB bandwidths are adjusted with Sweep Generator/Bandwidth Control Assembly A9 (paragraph 5-22).

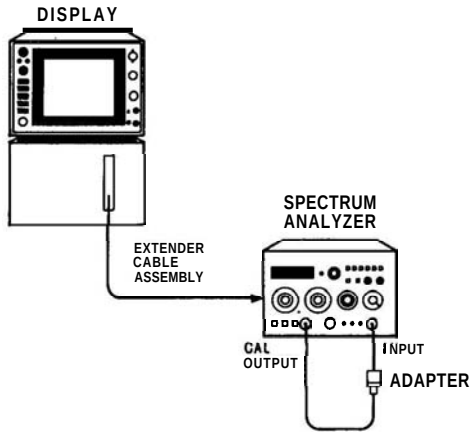

FIGURE 5-5. CRYSTAL AND LC BANDWIDTH FILTER ADJUSTMENTS TEST SETUP

EQUIPMENT:

Adapter, Type N (m) to BNC (f)	HP 1250-0780
Crystal Short (3 required)	See Figure 5-6
Extender Cable Assembly	HP 5060-0303

NOTE

A crystal short consists of a .01 μF capacitor (HP Part Number 0160-0161) and a 90.9 ohm resistor (HP Part Number 0757-0400) connected in series. Two square terminal connectors (HP Part Number 0362-0265) are used to connect the crystal short across the test points.

ADJUSTMENTS

5-21. BANDWIDTH FILTER ADJUSTMENTS(Cont'd)

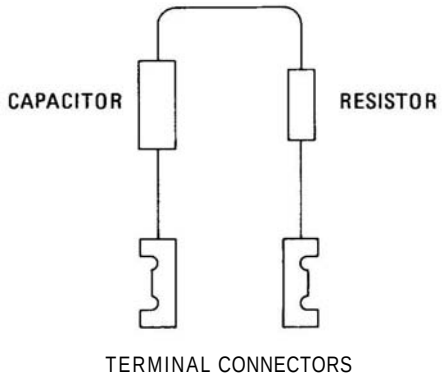

FIGURE 5-6. CRYSTAL SHORT CONFIGURATION

PROCEDURE:

NOTE

Allow 30 minutes warmup time before performing adjustments.

1. **Set spectrum analyzer controls as follows:**

FREQUENCYBAND	.01 – 3 GHz
TUNING	35 MHz
FREQ SPAN/DIV	200 kHz
RESOLUTIONBW	1 MHz
INPUTATTEN	10 dB
REFERENCELEVEL	0 dBm
Amplitude Scale	LIN
SWEEP TIME/DIV	10 msec
SWEEPTRIGGER	FREE RUN

Crystal Alignment

2. **Connect equipment as shown in Figure 5-5.**

NOTE

If Sweep Generator A9 has been replaced or adjusted, perform steps 3 through 8. If not, proceed to step 9.

ADJUSTMENTS

5-21. BANDWIDTH FILTER ADJUSTMENTS (Cont'd)

3. Center the signal with TUNING control. Using REF LEVEL FINE control, place signal peak at 7.1 divisions (0.9 division from top graticule line).

4. Adjust A9R85 LC until signal is five divisions wide at the fifth graticule line (1 MHz wide at 3-dB points).

5. Set FREQ SPAN/DIV to 10 kHz and RESOLUTION BW to 10 kHz.

6. Center the signal with FINE TUNING control.

7. Using REF LEVEL FINE control, place signal peak at 7.1 divisions.

8. Adjust A9R72 XTL until signal is one division wide at the fifth graticule line (10 kHz wide at 3-dB points).

9. Set FREQ SPAN/DIV to 20 kHz and RESOLUTION BW to 30 kHz.

10. Center signal with TUNING control.

11. Adjust REF LEVEL FINE control to place signal at sixth graticule line.

12. Remove top guide rail. Connect crystal shorts (through cover access holes) across the following pairs of test points: A13TP1/TP2, A11TP1/TP2, and A11TP4/TP5.

NOTE

Keep crystal spike centered during adjustments. The SYM and CTR adjustments for each crystal interact (the signal also drifts in this narrow span).

13. Adjust front-panel TUNING control to center bandpass spike (Figure 5-7) on the CRT display.

NOTE

A non-metallic tuning tool is required for adjustments on the A11 and A13 bandwidth filter assemblies.

14. Adjust A13C54 CTR for minimum signal amplitude. Then adjust A13C38 SYM and A13C54 CTR for a centered and symmetrical bandpass as shown in Figure 5-7.

ADJUSTMENTS

5-21. BANDWIDTH FILTER ADJUSTMENTS (Cont'd)

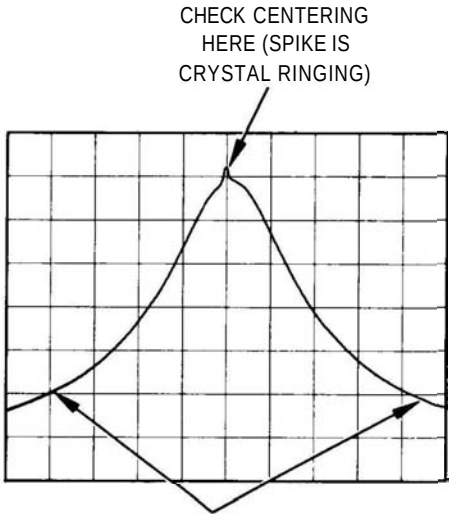

FIGURE 5-7. ADJUSTING CRYSTAL SYMMETRY AND CRYSTAL CENTERING

15. Remove crystal short from A13TP1/TP2 and connect it across A13TP4/TP5.

16. Adjust A13C25 CTR for minimum signal amplitude. Then adjust A13C15 SYM and A13C25 CTR for a centered and symmetrical bandpass.

17. Remove crystal short from A11TP4/TP5 and connect it across A13TP1/TP2.

18. Adjust A11C54 CTR for minimum signal amplitude. Then adjust A11C38 SYM and A11C54 CTR for a centered and symmetrical bandpass.

19. Remove crystal short from A11TP1/TP2 and connect it across A11TP4/TP5.

20. Adjust A11C25 CTR for minimum signal amplitude. Then adjust A11C15 SYM and A11C25 CTR for a centered and symmetrical bandpass.

21. Remove the crystal shorts.

22. Set FREQ SPAN/DIV to 10 kHz and RESOLUTION BW to 30 kHz. Center signal on CRT with TUNING control.

23. Switch RESOLUTION BW from 30 kHz to 10 kHz and back several times. Verify that signal shift does not exceed 3 kHz (0.3 divisions). If signal shift is out of tolerance, return to step 11.

ADJUSTMENTS

5-21. BANDWIDTH FILTER ADJUSTMENTS (Cont'd)

LC Alignment

CAUTION

Accidentally shorting the case of **A9Q1** (directly below **A9TP6**) to ANY test point will cause catastrophic failure to Sweep Generator Assembly **A9.**

24. Set RESOLUTION BW control to 100 kHz. Jumper **A9TP6** to **A9TP8.** This forces the BW7 line to **+15V.** Set FREQ **SPAN/DIV** to 100 kHz.

NOTE

When Bandwidth Filter Assemblies **A11** and A13 are installed with covers in place, midget copper alligator clips (HP Part Number 1400-0483) can be used to short test points to the cover.

25. Perform preliminary LC filter adjustments as follows:

NOTE

It might be necessary to adjust the REF LEVEL **FINE** control to obtain an **on-**screen display during the following adjustments.

a. Remove A! 3 cover and install A13 on extender board.

b. Short to ground the following test points: **A13TP6,** A11**TP3,** and **A11TP6.** (This widens all but one LC pole).

c. Center signal on CRT with TUNING control. Adjust **A13C73** for minimum signal amplitude.

d. Disconnect short from **A13TP6** and short to ground **A13TP3.**

e. Adjust **A13C74** for minimum signal amplitude. Remove shorts from **A13TP3, A11TP3,** and **A11TP6.**

f. Reinstall A13 and cover. Short **A13TP3** and **A13TP6** to ground. Remove **A11** cover and install A11 **on** extender board.

g. Short **A11TP6** to ground.

h. Adjust A11**C73** for minimum signal amplitude.

i. Disconnect short from **A11TP6** and short to ground A11**TP3.**

j. Adjust A11**C74** for minimum signal amplitude.

k. Disconnect shorts from test points and reinstall **A11** and cover. Leave jumper from **A9TP6** to **A9TP8** in place.

ADJUSTMENTS

5-21. BANDWIDTH FILTER ADJUSTMENTS (Cont'd)

26. Short to ground A11TP3, A11TP6, and A13TP3. Set RESOLUTION BW to 100 kHz and set FREQ SPAN/DIV to 20 kHz.

27. Center signal on CRT with TUNING control. Adjust A13C45 LC CTR for symmetrical bandpass display on CRT. Use FINE TUNING control to keep crystal spike centered.

NOTE

The crystal spike represents the center frequency of the crystal poles. In this procedure we are aligning the LC poles with the crystal poles. On some instruments, the crystal spike may not be very pronounced, in which case the center frequency of the 100 kHz RBW will have to be compared to the center frequency of the 30 kHz RBW.

28. Move short from A13TP3 to A13TP6. Leave other shorts in place. Center signal on CRT with TUNING control. Adjust A13C23 LC CTR for symmetrical bandpass display on CRT, keeping crystal spike centered.

29. Move short from A11TP6 to A13TP3. Leave other shorts in place. Center signal on CRT with TUNING control. Adjust A11C45 LC CTR for symmetrical bandpass display on CRT, keeping crystal spike centered.

30. Move short from A11TP3 to A11TP6. Leave other shorts in place. Center signal on CRT with TUNING control. Adjust A11C23 LC CTR for symmetrical bandpass display on CRT, keeping crystal spike centered.

31. Disconnect shorts from A11TP6, A13TP3, A13TP6, and from ground. Remove jumper from A9TP6 and A9TP8.

32. Set FREQ SPAN/DIV to 10 kHz and RESOLUTION BW to 30 kHz. Center signal on CRT with TUNING control. Set RESOLUTION BW to 100 kHz and note where signal crosses center vertical graticule line.

33. Adjust A11C23, A11C45, A13C23, and A13C45 in succession so that amplitude of signal is peaked where it crosses center vertical CRT graticule line, repeating step 32 between adjustments as necessary.

34. Repeat steps 32 and 33 until 30 kHz and 100 kHz bandwidths are centered with each other. If signal shift between 30 kHz and 100 kHz bandwidths is greater than 10 kHz (1 division), repeat steps 24 through 33.

Bandwidth Amplitude

35. Set Amplitude Scale switch to 1 dB/DIV and jumper A9TP6 to A9TP8.

36. Short A11TP3, A11TP6, A13TP3, and A13TP6 to ground.

37. Set RESOLUTION BW to 100 kHz and FREQ SPAN/DIV to 200 kHz.

ADJUSTMENTS

5-21. BANDWIDTH FILTER ADJUSTMENTS (Cont'd)

38. Adjust FINE TUNING and REF LEVEL FINE controls for a centered signal at 7 divisions from bottom graticule line.

39. Remove shorts from A13TP3 and A13TP6 and center signal with FINE TUNING control. Adjust A13R26 LC for a signal amplitude of 7 divisions. Replace shorts on A13TP3 and A13TP6.

40. Remove shorts from A11TP3 and A11TP6. Adjust A11R26 LC for a signal amplitude of 7 divisions.

41. Repeat steps 36 through 40 until no further adjustment is necessary. Remove shorts from A11TP3, A11TP6, A13TP3, and A13TP6.

42. Adjust A11R31 XTL and A13R31 XTL fully counterclockwise.

43. Set RESOLUTION BW to 1 kHz and FREQ SPAN/DIV to 10 kHz. Center signal with FINE TUNING control. Adjust A11R31 XTL and A13R31 XTL equally for a signal amplitude of 7 divisions. Each potentiometer should be adjusted to accomplish half the necessary increase in signal amplitude.

44. Remove jumper from A9TP6 and A9TP8.

45. Set FREQ SPAN/DIV to 500 kHz and RESOLUTION BW to 3 MHz.

46. Center signal with TUNING control. Adjust REF LEVEL FINE control for a signal amplitude of 7 divisions.

47. Step down RESOLUTION BW from 3 MHz tp 300 kHz. Variation in signal amplitude should be less than ± 0.4 dB.

48. Set FREQ SPAN/DIV to 10 kHz, TIME/DIV to AUTO, and step down RESOLUTION BW from 100 kHz to 1 kHz. Variation of signal amplitude should be less than ± 0.7 dB from the 7th division reference.

49. Repeat steps 35 through 46 until variation in signal amplitude is within limits.

NOTE

If amplitude variation between crystal and LC poles exceeds specification, A11R7*/A13R7* can be replaced to bring the crystal poles to the amplitude of the LC poles.

ADJUSTMENTS

5-22. 3-dB BANDWIDTH ADJUSTMENTS

REFERENCE:

A9 Schematic

DESCRIPTION:

The 3-dB bandwidths for the 3 MHz through the 30 kHz RESOLUTION BW settings are adjusted using the CAL OUTPUT as the signal source. The 3-dB bandwidths for the 10 kHz, 3 kHz, and 1 kHz RESOLUTION BW settings are adjusted by injecting a stable 321.4 MHz signal into the Third Converter (A10) of the spectrum analyzer.

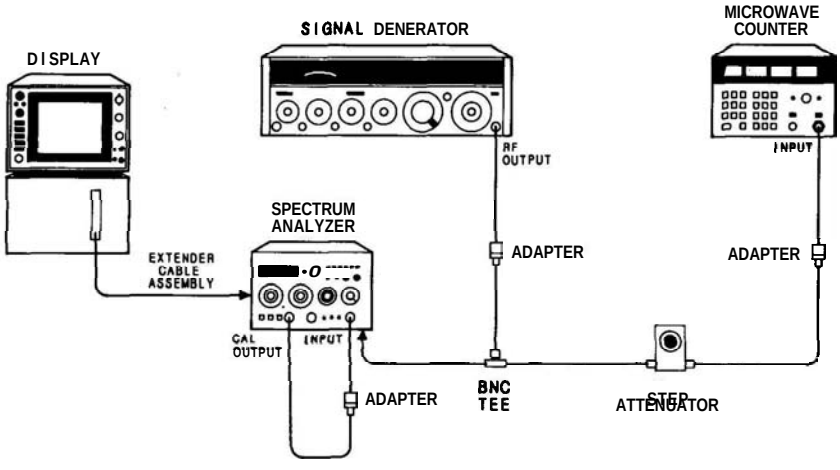

FIGURE 5-8. 3-dB BANDWIDTH ADJUSTMENT TEST SETUP

EQUIPMENT:

Signal Generator	HP 8640B
Frequency Counter	5342A
Step Attenuator	HP 355D
Adapter, Type N (m) to BNC (f) (2 required)	HP 1250-0780
Extender Cable Assembly	HP 5060-0303
Test Cable, BNC to SMB	HP 85680-60093
BNC Tee	HP 1250-0781

ADJUSTMENTS

5-22. 3-dB BANDWIDTH ADJUSTMENTS (Cont'd)

PROCEDURE:

1. Set spectrum analyzer controls as follows:

FREQUENCYBAND	0.01 – 3 GHz
TUNING	35 MHz
FREQ SPAN/DIV	200 kHz
RESOLUTIONBW	1 MHz
INPUTATTEN	10 dB
REFERENCELEVEL	0 dBm
Amplitude Scale	LIN
SWEEP TIME/DIV	2 msec
SWEEPTRIGGER	FREE RUN
VIDEOFILTER	OFF
BASELINECLIPPER	OFF
853A (if used)	TRACE A & TRACE B STORE BLANK (ANALOG DISPLAY)

2. Connect CAL OUTPUT to spectrum analyzer INPUT

3. Set a 7.1 division signal level on display with REF LEVEL FINE control. Signal will be 0.9 division from top graticule line.

4. Adjust A9R85 LC control for a 5 division wide signal at fifth graticule line.

5. Set RESOLUTION BW to 3 MHz and FREQ SPAN/DIV to 500 kHz. If necessary, reset signal level to 7.1 divisions with REF LEVEL FINE control. The bandwidth at the fifth graticule line should be between 5.4 and 6.6 divisions.

NOTE

A9R85 LC may be further adjusted to bring the 3 MHz and 300 kHz bandwidths within limits; however, the final measurement of the 1 MHz bandwidth must be between 4.5 and 5.5 division at the fifth graticule line. (If the 3 MHz bandwidth cannot be brought within limits by adjustment of A9R85 LC, change the value of factory-selected resistor A9R120*. If the 300 kHz bandwidth cannot be brought within limits by adjustment of A9R85 LC, change the value of A9R116*.)

6. Set RESOLUTION BW to 300 kHz and FREQ SPAN/DIV to 50 kHz. If necessary, reset signal level to 7.1 divisions with REF LEVEL FINE control. The bandwidth should be between 5.4 and 6.6 divisions at the fifth graticule line.

7. Set RESOLUTION BW to 100 kHz and FREQ SPAN/DIV to 20 kHz. If necessary, reset signal level to 7.1 divisions with REF LEVEL FINE control. The bandwidth should be between 4.3 and 5.7 divisions at the fifth graticule line.

ADJUSTMENTS

5-22. 3-dB BANDWIDTH ADJUSTMENTS (Cont'd)

NOTE

If the 100 kHz bandwidth is not within the specified limits, change the values of factory-selected resistors **A11R19*, A11R43*, A13R19*,** and **A13R43*.** If the bandwidth is too wide, increase the value of the resistors; if the bandwidth is too narrow, decrease the value of the resistors. The factory-selected resistors need not be of equal value, but each must be within one standard value of the others.

8. Set RESOLUTION BW to 30 kHz and FREQ SPAN/DIV to 10 kHz. If necessary, reset signal level with REF LEVEL FINE control. The bandwidth should be between 2.6 and 3.4 divisions at the fifth graticule line.

NOTE

If the 30 kHz bandwidth is not within the specified limits, change the values of factory-selected resistors A11**R23*,** A11**R48*, A13R23*,** and **A13R48*.** If the bandwidth is too wide, decrease the value of the factory-selected resistors; if the bandwidth is too narrow, increase the value of the resistors. The factory-selected resistors must be within three standard values of the nominal value.

9. Connect signal generator as shown in Figure 5-8. Tune signal generator to approximately 21.4 MHz. Set the signal generator to approximately 0 dBm and the step attenuator to 10 dB. Set COUNTER MODE to EXPAND X 100.

10. Place spectrum analyzer on right side and connect test cable to Third Converter 21.4 MHz output connector A16J3. If connector is not present (some early instruments were not so supplied), remove AlOWl from A5J2 and connect AlOWl through a 10 dB step attenuator set to 30 dB and the signal generator set for a –10 dBm output level. The 10 dB step attenuator between BNC tee and frequency counter can be eliminated.

11. Set HP 8559A RESOLUTION BW to 1 MHz. Tune signal generator to peak signal on CRT display (near 21.4 MHz) (321.4 MHz if injecting into A10W1). Adjust the output level of signal generator to place the signal at 7.1 divisions.

12. Set RESOLUTION BW to 3 kHz. Tune signal generator to peak signal on CRT display.

13. Adjust REF LEVEL FINE to place signal at 7.1 divisions.

14. Note the counter frequency and tune the signal generator 1500 Hz below the center frequency noted. Record the new counter frequency.

ADJUSTMENTS

5-22. 3-dB BANDWIDTH ADJUSTMENTS(Cont'd)

15. Adjust A9R72 XTL to bring signal level to the fifth graticule line (three divisions from the top graticule line).

16. Increase signal generator frequency until signal on CRT display peaks and then decreases to the fifth graticule line. Record counter frequency.

_____

17. Compare new frequency with frequency recorded in step 14. The difference between the two frequencies should be 2800 to 3200 Hz. If the bandwidth is not within limits, repeat steps 12 through 17, slightly readjusting A9R72 XTL, until the specified limits are achieved.

18. Set RESOLUTION BW to 10 kHz. Tune signal generator to peak signal on CRT display.

19. Adjust REF LEVEL FINE to place signal at 7.1 divisions.

20. Decrease signal generator frequency until the signal on the CRT display is at the fifth graticule line. Record this frequency.

_____

21. Increase the signal generator frequency until the signal on the CRT display peaks and then decreases to the fifth graticule line. Record this frequency.

_____

22. Compare new frequency with frequency recorded in step 20. The difference between the two frequencies should be 9.000 kHz to 11.000 kHz.

NOTE

A9R72 XTL may be further adjusted to bring the 10 kHz and 1 kHz bandwidths within limits; however, the final measurement of the 3 kHz bandwidth must be between 2700 Hz and 3300 Hz. (If the 10 kHz bandwidth cannot be brought within limits by adjusting **A9R72 XTL,** change the value of factory-selected resistor **A9R111*.** If the 1 kHz bandwidth cannot be brought within limits by adjusting **A9R72** XTL, change the value of **A9R109*.)**

23. Set RESOLUTION BW to 1 kHz. Tune signal generator to peak signal on CRT display.

24. Adjust REF LEVEL FINE to place signal at 7.1 divisions.

25. Record the counter frequency.

_____

ADJUSTMENTS

5-22. 3-dB BANDWIDTH ADJUSTMENTS (Cont'd)

26. Increase signal generator frequency until signal on CRT display decreases to the fifth graticule line. Record the counter frequency.

_____

27. Compare new frequency with frequency originally noted in step 25. The difference between the two frequencies should be 450 Hz to 550 Hz.

ADJUSTMENTS

5-23. RF GAIN ADJUSTMENT

REFERENCE:

A12 Schematic

DESCRIPTION:

The RF gain (sensitivity) of Step Gain Assembly A12 is adjusted by injecting a 21.4 MHz signal at XA10P1. Third Converter Assembly A10 is removed and replaced with a special extender board for applying the 21.4 MHz signal from the signal generator.

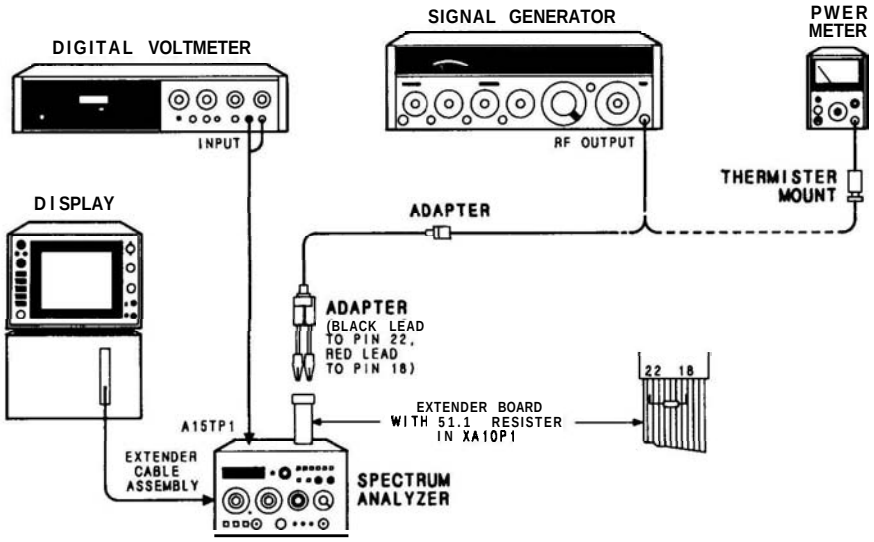

FIGURE 5-9. RF GAIN ADJUSTMENT TEST SETUP

EQUIPMENT:

Signal Generator	HP 8640B
Digital Voltmeter	HP 3456A
Power Meter	HP 435A/B
Power Sensor	HP 8481A
Special Extender Board with 51.1 ohm resistor	HP 5060-0258/0757-0394
Test Cable, BNC (m) to Banana Plug	HP 10111A
Extender Cable Assembly	HP 5060-0303
Adapter, BNC (f) to Alligator Clips (2 required)	HP 8120-1292

ADJUSTMENTS

5-23. RF GAIN ADJUSTMENT (Cont'd)

NOTE

To make special extender board, solder 51.1 ohm resistor from pin 18 to pin 22 of standard 24 pin extender board, HP Part No. **5060-0258.** Leave resistor leads long for easy connection of clip leads.

PROCEDURE:

1. Set spectrum analyzer controls as follows:

FREQUENCY BAND GHz	.01 – 3
FREQ SPAN/DIV	1 MHz
RESOLUTIONBW	1 MHz
INPUTATTEN	0 dB
REF LEVEL dBm	–10
REFLEVELFINE	0
Amplitude Scale	LIN
SWEEP TIME/DIV	AUTO
SWEEPTRIGGER	FREE RUN
VIDEOFILTER	MIN

2. Connect equipment as shown in Figure 5-9. Resistor on extender board should be toward rear of HP 8559A.

3. Set signal generator frequency to 21.4 MHz. Set output level for approximately –5 dBm.

NOTE

To remove Third Converter Assembly **A10,** it will be necessary to disconnect **A10W1** from **A5J2** and temporarily remove Marker Assembly A8 and Sweep **Generator/Res** BW Assembly **A9.**

4. Connect output of signal generator across 51.1 ohm resistor on special board using BNC to clip-lead adapter. The red lead (center conductor) should be connected to pin 18 of extender board.

5. Set signal generator frequency for peak amplitude on CRT display. Connect output of signal generator to power meter through a power sensor and set output level to –3 dBm. Reconnect signal generator output to clip-lead adapter.

6. Adjust A12R5 GAIN adjustment for signal one division from top graticule line. DVM should indicate +700 mV ±30 mV. Remove special extender board and replace Third Converter Assembly A10.

NOTE

If step gain adjustments will be performed next, do not reconnect **A10W1** to **A5J2.**

ADJUSTMENTS

5-23. RF **GAIN** ADJUSTMENT (Cont'd)

CAUTION

When reconnecting **A10W1** to **A5J2,** exercise caution; the connector should not be torqued more than 6 inch-pounds, **otherwise** damage to **A5J2** will result.

NOTE

Front panel VERTICAL **GAIN** and POSN control settings can affect the voltage measured at **A15TP1.** Vertical calibration should be checked after adjusting **A12R5** for 700 **mV** (Refer to Section **III).**

ADJUSTMENTS

5-24. STEP GAIN ADJUSTMENTS

REFERENCE:

A12 Schematic

DESCRIPTION:

REF LEVEL FINE, 0 dB, and −12 dB adjustments are properly set and step gains of 10 dB, 20 dB, and 40 dB are adjusted.

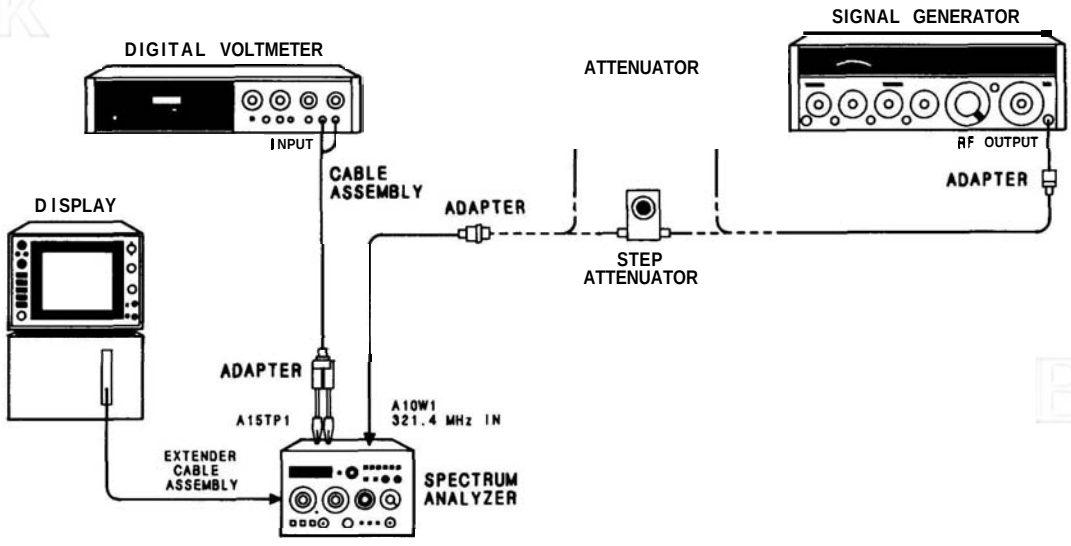

FIGURE 5-10. STEP GAIN ADJUSTMENTS TEST SETUP

EQUIPMENT:

Signal Generator	HP 8640B
Step Attenuator (1 dB/Step)	HP 355C, Option H80
Step Attenuator (10 dB/Step)	HP 355D, Option H82
Digital Voltmeter	HP 3456A
Adapter, Type N (m) to BNC (f)	HP 1250-0780
Adapter, BNC (m) to SMC (m)	HP 1250-0831
Cable, BNC (m) to Banana Plug	HP 10111A
Extender Cable Assembly	HP 5060-0303
Adapter, BNC (f) to Alligator Clips	HP 8120-1292

ADJUSTMENTS

5-24. STEP GAIN ADJUSTMENTS (Cont'd)

PROCEDURE:

1. Set spectrum analyzer controls as follows:

FREQ SPAN/DIV	1 MHz
RESOLUTIONBW	1 MHz
INPUTATTEN	10 dB
REF LEVEL dBm	0
Amplitude Scale	1 dB/DIV
SWEEP TIME/DIV	AUTO
SWEEPTRIGGER	FREE RUN
VIDEO FILTER	MIN

2. Connect equipment as shown in Figure 5-10. Connect signal generator tuned to 321.4 MHz with approximately – 30 dBm output to one side of a 1 dB/step attenuator. Connect step attenuator output to A10W1 through adapter. Tune signal generator frequency for peak amplitude on display.

3. Set step attenuator to 12 dB and REF LEVEL FINE to – 12. Set signal generator level for a signal one division down from top graticule line.

4. Adjust A12R39 – 12 D until signal stops rising on display, then adjust A12R39 counterclockwise until signal drops approximately one third to one half of a division.

5. Set signal generator level so signal is one division down from top graticule line on display.

6. Set step attenuator to 0 dB and REF LEVEL FINE to 0.

7. Adjust A12R35 0 D adjustment for a signal level one division from top graticule line.

8. Set step attenuator to 12 dB and REF LEVEL FINE to – 12. DVM indication should be 700 ± 30 mV (offset). If offset is greater than ± 30 mV, repeat steps 3 through 8 until DVM indication is within limits.

9. Replace 1 dB/step attenuator with 10 dB/step attenuator set to 0 dB. Set REF LEVEL FINE control to 0.

10. Tune signal generator frequency for peak amplitude on the display (near 321.4 MHz).

11. Set signal generator level for a signal one division down from top graticule line. Set step attenuator to 10 dB and REF LEVEL dBm to – 10.

12. Adjust A12R6 10 D adjustment for signal level one division from top graticule line.

13. Set step attenuator to 20 dB and REF LEVEL dBm to – 20.

14. Adjust A12R21 20 D adjustment for signal level one division from top graticule line.

15. Set attenuator to 40 dB and REF LEVEL dBm to – 40.

ADJUSTMENTS

5-24. STEP GAIN ADJUSTMENTS (Cont'd)

NOTE

Some video filtering might help reduce noise. Set VIDEO FILTER control so noise is reduced, but the signal amplitude remains unchanged.

16. Adjust A12R29 40 D adjustment for signal level one division from top graticule line.

17. Check REF LEVEL dBm control from 0 to – 50 as shown in Table 5-11.

TABLE 5-11. REF LEVEL CONTROL CHECK

Reference Level (dBm)	Attenuator (dB)	Deviation From Reference (700 +20 mV)
0	0	Reference mV
–10	10	Reference +40 mV
2 0	20	Reference 240 mV
–30	30	Reference +40 mV
–40	40	Reference +40 mV
–50	50	Reference ±40 mV

18. Reconnect A10W1 to A5J2.

CAUTION

When reconnecting A10W1 to A5J2, exercise caution. The connector should not be torqued to more than 6 inch-pounds; otherwise, damage to A5J2 will result.

ADJUSTMENTS

5-25. FIRST CONVERTER ADJUSTMENTS

REFERENCE:

A3, A4, AS, A6, and A7 Schematics

DESCRIPTION:

The First LO (A6 YTO) is adjusted by monitoring the YTO output at the RF input connector (LO emission) and the tuning voltage (TUNE) output of the A7 Frequency Control board, and adjusting the YTO low-end frequency for 3 GHz at 0V tuning voltage and 6 GHz at −10V tuning voltage.

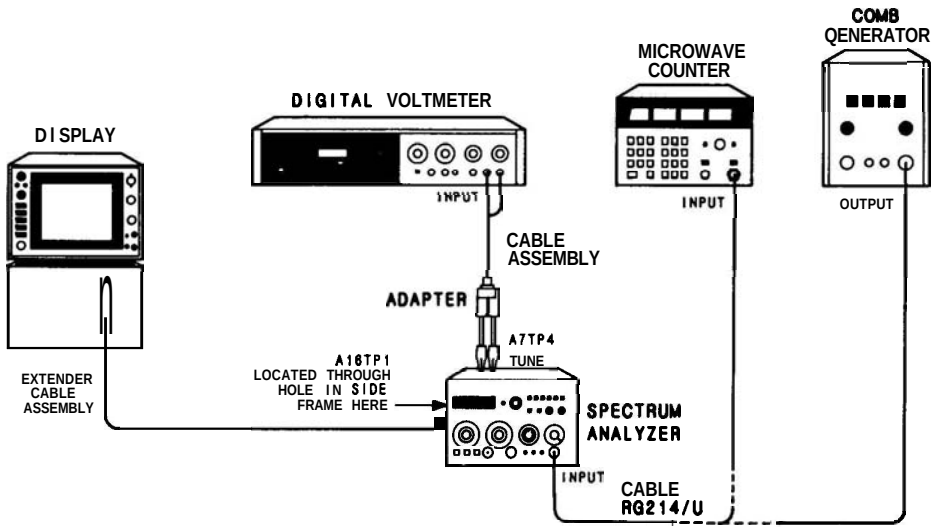

FIGURE 5-11. FIRST CONVERTER ADJUSTMENTS TEST SETUP

EQUIPMENT:

Frequency Counter	HP 5342A
Digital Voltmeter	HP 3456A
Comb Generator	HP 8406A
Cable, BNC (m) to Banana Plug	HP 10111A
Extender Cable Assembly	HP 5060-0303
Adapter, BNC (f) to Alligator Clips	HP 8120-1292
Cable Assembly, RG-214/U, Type N Connectors	HP 11500A

PROCEDURE:

1. Allow one-half hour warmup time of equipment with spectrum analyzer connected to mainframe with extender cable.

ADJUSTMENTS

5-25. FIRST CONVERTER ADJUSTMENTS (Cont'd)

First LO Adjustments

2. Connect DVM to A7TP6 TUNE.

3. Set spectrum analyzer controls as follows:

INPUT ATTEN	0 dB
FREQ SPAN/DIV	0
ALTIF	OFF

4. Connect frequency counter to spectrum analyzer RF Input.

5. Jumper A16TP1 DIODE BIAS to ground. A16TP1 is located on the motherboard through a hole in the analyzer left side gusset.

6. Adjust front-panel TUNING control for DVM indication of 0.000 Vdc (fully counterclockwise).

7. Adjust A7R8 (3 GHz) for frequency counter indication of 3.000 GHz ± 1 MHz. (If this adjustment cannot be achieved, factory select resistor A7R3* can be added – if it is not installed – or decreased to provide the proper range. Select a value of 147K ohms for A7R3*, initially, and decrease this value to no less than 56.2K ohms.)

8. Adjust front-panel TUNING control for DVM indication of – 10.000 Vdc.

9. Set A7R75 6 GHz F (fine) to approximately mid-range (R75 is a 20-turn potentiometer).

10. Adjust A7R47 6 GHz C (coarse) for a frequency counter indication of 6.000 GHz ± 2 MHz.

11. Retune front-panel TUNING control for 0.000 Vdc DVM indication and readjust A7R8 3 GHz if necessary for frequency counter indication of 3.000 GHz ± 1 MHz.

12. Tune front-panel TUNING control for – 10.000 Vdc DVM indication.

13. Lightly tap the top edge of the A7 Frequency Control board with the handle of a small screwdriver to seat controls.

14. Adjust A7R75 6 GHz F (fine) for frequency counter indication of 6.000 GHz ± 1 MHz.

ADJUSTMENTS

5-25. FIRST CONVERTER ADJUSTMENTS (Cont'd)

Alternate IF First LO Shift Check

15. Press front-panel ALT IF pushbutton IN to activate alternate IF.

16. Verify YTO frequency shift according to Table 5-12.

TABLE 5-12. FIRST LO SHIFT CHECK

FREQUENCY BAND GHz	ALT IF	FREQUENCY COUNTER INDICATION
1 (.01–3)	OFF	Reference (6.000 GHz)
1 (.01–3)	ON	Reference –15 MHz ±800 kHz
2 (6–9)	ON	Reference +15 MHz 5800 kHz
3 (3–9)	ON	Reference –7.5 MHz 5400 kHz
4 (9–15)	ON	Reference +7.5 MHz ±400 kHz
5 (6–15)	ON	Reference –5 MHz ±300 kHz
6 (12.1–21)	ON	Reference +5 MHz 5300 kHz

17. Remove jumper from A19TP1 DIODE BIAS to ground.

FM Driver Sensitivity and Delay Compensation Adjustment

18. Disconnect frequency counter from spectrum analyzer RF Input and connect comb generator to RF Input.

19. Set comb generator for 1 MHz comb teeth.

20. Set spectrum analyzer controls as follows:

FREQ SPAN/DIV ..... 1 MHz
RES BW ..... 30 kHz
TIME/DIV ..... AUTO
FREQUENCY BAND GHz ..... Band 1 (.01 – 3)
REF LEVEL dBm ..... –20
INPUT ATTEN ..... 0 dB
ALT IF ..... OFF
SIGIDENT ..... OFF
Amplitude Scale ..... 10 dB/DIV
TRIGGER ..... FREE RUN

21. Tune front-panel TUNING control for approximately 1.5 GHz indication on front-panel FREQUENCY GHz display.

22. Adjust A7R83 DC (Delay Compensation) until the comb teeth on the left half of the mainframe CRT display have the same approximate spacing as those on the right half.

ADJUSTMENTS

5-25. FIRST CONVERTER ADJUSTMENTS (Cont'd)

23. Adjust front-panel TUNING FINE control to place a comb tooth on the first vertical graticule line of the CRT display.

24. Adjust A7R92 FM to place a comb tooth on the ninth vertical graticule line of the CRT display.

25. Switch to 10 kHz RES BW and adjust A7R83 DC for even spacing of the comb teeth on the first two graticule lines.

26. Readjust TUNING FINE control to place a comb tooth on the first vertical graticule line. Adjust A7R92 FM to place a comb tooth on each of the graticule lines while keeping the first comb tooth aligned using the TUNING FINE control.

27. Repeat steps 25 and 26 to achieve the best span linearity.

NOTE

Trim potentiometer A7R83 (DC) controls the amount of delay compensation; A7R96* controls the time constant of the compensation. If the adjustment of A7R83 does not result in even comb tooth spacing, R96* will have to be re-selected for even spacing.

28. Switch to 30 kHz RES BW. The comb tooth spacing should not change. If there is a shift of the comb teeth, repeat steps 22 through 27 for best compromise in span linearity.

29. Tune to approximately 100 MHz and verify that a comb tooth placed on the first vertical graticule line, using the TUNING FINE control, will align the ninth comb tooth with the ninth vertical graticule line ± 1 minor division.

30. Select the 10 kHz RES BW and verify that a comb tooth on the first vertical graticule line will align the ninth comb tooth with the ninth graticule line ± 1 minor division.

31. Select the 30 kHz RES BW and repeat step 29 for a frequency of approximately 2.5 GHz.

32. Repeat step 30 for a frequency of approximately 2.5 GHz.

33. If necessary, A7R83 (DC) and A7R92 (FM) may be compromise adjusted for best span linearity at the three frequencies indicated.

34. Set comb generator for 100-MHz comb teeth.

35. Adjust front-panel TUNING control for 0.10 GHz indication on FREQUENCY display.

36. Set FREQ SPAN/DIV to 2 MHz.

37. Adjust TUNING to place 100-MHz comb tooth on center graticule line.

ADJUSTMENTS

5-25. FIRST CONVERTER ADJUSTMENTS (Cont'd)

38. Set FREQ SPAN/DIV to 1 **MHz.** Note position of comb tooth.

39. Adjust A7R81 (MO) to place comb tooth midway between position noted in step 38 and center graticule line.

40. Set FREQ SPAN/DIV to 2 **MHz.**

41. Adjust TUNING to place comb tooth in center graticule line.

42. Set FREQ SPAN/DIV to 1 **MHz.** Note displacement of comb tooth from center graticule line.

43. Repeat steps 36 through 42 until displacement of comb tooth is less than 0.2 major division when FREQ SPAN/DIV is switched from 2 **MHz** to 1 **MHz.**

ADJUSTMENTS

5-26. SECOND CONVERTER ADJUSTMENTS

REFERENCE:

A3, A4, A5, A6, and A8 Schematics

DESCRIPTION:

First, the Second LO is adjusted for proper frequency using a frequency counter. Next, the signal identifier (SIG ID) and alternate IF (ALT IF) signals are adjusted so that the displayed signal appears in the same location in both regular and alternate IF and the signal identifier is always 1 MHz away from this signal in either regular or alternate IF. Last, the first IF bandpass filter is aligned for a bandpass wide enough to allow for the first LO shift and amplitude characteristics such that there will be a minimal shift in displayed signal amplitude when the analyzer is switched from regular to alternate IF.

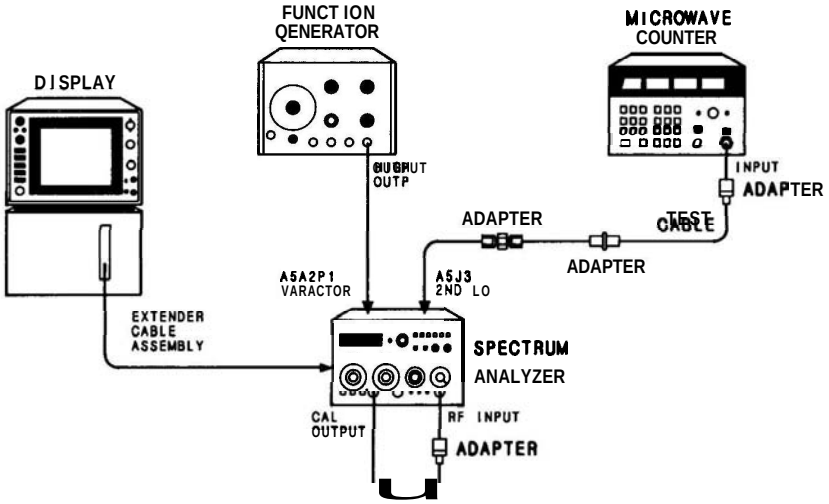

FIGURE 5-12. SECOND CONVERTER ADJUSTMENTS TEST SETUP

EQUIPMENT:

Frequency Counter	HP 5342A
Function Generator	HP 3310A
Test Cable, BNC (m) to SMB (f)	HP 85680-60093
Adapter, BNC (f) to Alligator Clips	HP 8120-1292
Adapter, SMB (m) to SMB (m)	HP 1250-0669
Adapter, SMB (f) to SMB (f)	HP 1250-0672
Adapter, Type N (m) to BNC (f) (2 required)	HP 1250780
Special Tuning Tool, Allen driver inserted through drilled-out 5/16 inch nut driver	HP 08555-60107
Oscilloscope	HP 1740A
Extender Cable Assembly	HP 5060-0303

ADJUSTMENTS

5-26. SECOND CONVERTER ADJUSTMENTS (Cont'd)

PROCEDURE:

Second LO Preliminary Adjustment

1. Allow one-half hour warm-up time of equipment with analyzer connected to mainframe with extender cable.
2. Connect frequency counter input to **A5J3** 2nd LO output using the test cable and two SMB adapters.
3. Select Band 1 **(.01 – 3)** and Alternate IF on spectrum analyzer front-panel by depressing these **pushbuttons**.
4. Using the special Allen **driver/nut** driver tuning tool, adjust **A5Z4** 2nd LO FREQUENCY for a frequency counter indication of 2671.1 MHz ± 0.5 MHz.
5. Connect spectrum analyzer CAL OUTPUT to RF INPUT and adjust front-panel TUNING controls to center the calibrator signal on the CRT display.
6. Set spectrum analyzer controls as follows:

FREQ **SPAN/DIV**	**1 MHz**
RES BW	300 kHz
TIME/DIV	**2 mSEC**
FREQUENCY BAND GHz	**BAND 1 (.01 – 3)**
SIG IDENT	OFF
ALTIF	OFF
853A	TRACE A & B STORE BLANK (ANALOG DISPLAY)

7. Depress front-panel SIG IDENT and ALT IF pushbuttons.
8. Turn SIG IDENT off and on while monitoring the display. The signal traces which appear when SIG IDENT is switched on are the signal identifier signals. The others are the alternate IF signals.
9. Adjust TUNING to place one of the signal identifier signals on a graticule line. This will be the reference graticule line.
10. Turn ALT IF off. Adjust **A8R34** REG to center the signal identifier signal on the reference graticule line.
11. Turn ALT IF on. Verify that the signal identifier signal appears on reference graticule line. If not, repeat step 10.
12. Adjust **A8R40** SIG ID to place the alternate IF signal 1 MHz (1 division) higher than the signal identifier signal.
13. Turn ALT IF off. Adjust **A8R39** OFF to center the signal on the same graticule line as the alternate IF signal (1 MHz higher than reference graticule line).

ADJUSTMENTS

5-26. SECOND CONVERTER ADJUSTMENTS (Cont'd)

14. Turn ALT IF on and verify that the two signals do not appear to move.

15. Change spectrum analyzer FREQ SPAN/DIV to 500 kHz.

16. Repeat steps 7 through 14 if necessary to align both signal identifier signals and both alternate IF signals and spaced 1 MHz (2 divisions) apart on the CRT display.

17. Depress front-panel ALT IF pushbutton. Turn SIG IDENT off.

18. Note Second LO frequency on frequency counter.

19. Adjust A5Z4 2nd LO FREQUENCY if necessary for a frequency counter indication of 2671.1 MHz ±0.5 MHz.

20. If second LO frequency is readjusted, recheck second LO shift adjustments, steps 5 through 16.

21. Set spectrum analyzer controls as follows:

FREQ SPAN/DIV	2 MHz
RESBW	3 MHz
REF LEVEL dBm	−10
INPUT ATTEN	10 dB
Amplitude Scale	1 dB/DIV
TIME/DIV	AUTO
FREQUENCY BAND GHz	Band 1 (.01 – 3)
ALTIF	ON
SIG IDENT	OFF

22. Adjust front-panel REF LEVEL dBm and REF LEVEL FINE controls to place signal peak in upper half of CRT display for convenient viewing.

23. Adjust front-panel TUNING control to place signal peak 3.75 divisions to the left of center screen on the CRT.

24. Connect the HIGH output of the function generator to an oscilloscope and adjust function generator output for a 0V to +20V ramp and frequency to 500 Hz.

25. Disconnect the function generator from the oscilloscope and connect it to A5A2TP1 VARACTOR by using the 8120-1292 adapter.

26. The following adjustments refer to aligning the Second Converter after internal repair of the converter. If the entire converter has been replaced, it will probably not be necessary to perform all of the adjustments.

27. Adjustments A5Z1, A5Z2, A5Z3, and A5L2 are used to align the bandpass filter and output match of the Second Converter. Z1 and L2 are used to adjust amplitude and Z2 and Z3 are used to center the response about the center frequency.

ADJUSTMENTS

5-26. SECOND CONVERTER ADJUSTMENTS(Cont'd)

28. The requirements for the converter response are illustrated in Figure 5-13a and are as follows: **Bandpass** should be at least 17 MHz, 1 dB down. Amplitude of response at 3.75 divisions to the left and 3.75 divisions to the right of center screen should be as near the same as possible. These are the positions of the IF signals for regular and alternate IE This is illustrated in composite photo Figure 5-13b. These positions should be the same distance from the roll-off point at each end of the response curve.

29. Distance from roll-off points can be checked by centering signal with function generator disconnected then reconnecting function generator and switching ALT IF on and off. This is illustrated in Figure **5-13c** and **5-**13d.

30. Adjust **A5Z1, Z2,** Z3 and L2 to satisfy the requirements of the converter response. If entire converter has been replaced, try adjusting **A5Z1** and L2 first. Do not adjust A2 and A3 unless it is necessary to meet requirements. Do not sacrifice amplitude to achieve flatness.

31. When adjustment is complete, disconnect function generator from **A5A2TP1,** center signal on display, and turn ALT IF on and off while monitoring signal.

32. Amplitude difference between regular and alternate IF should be no more than 0.4 dB.

ADJUSTMENTS

5-26. SECOND CONVERTER ADJUSTMENTS(Cont'd)

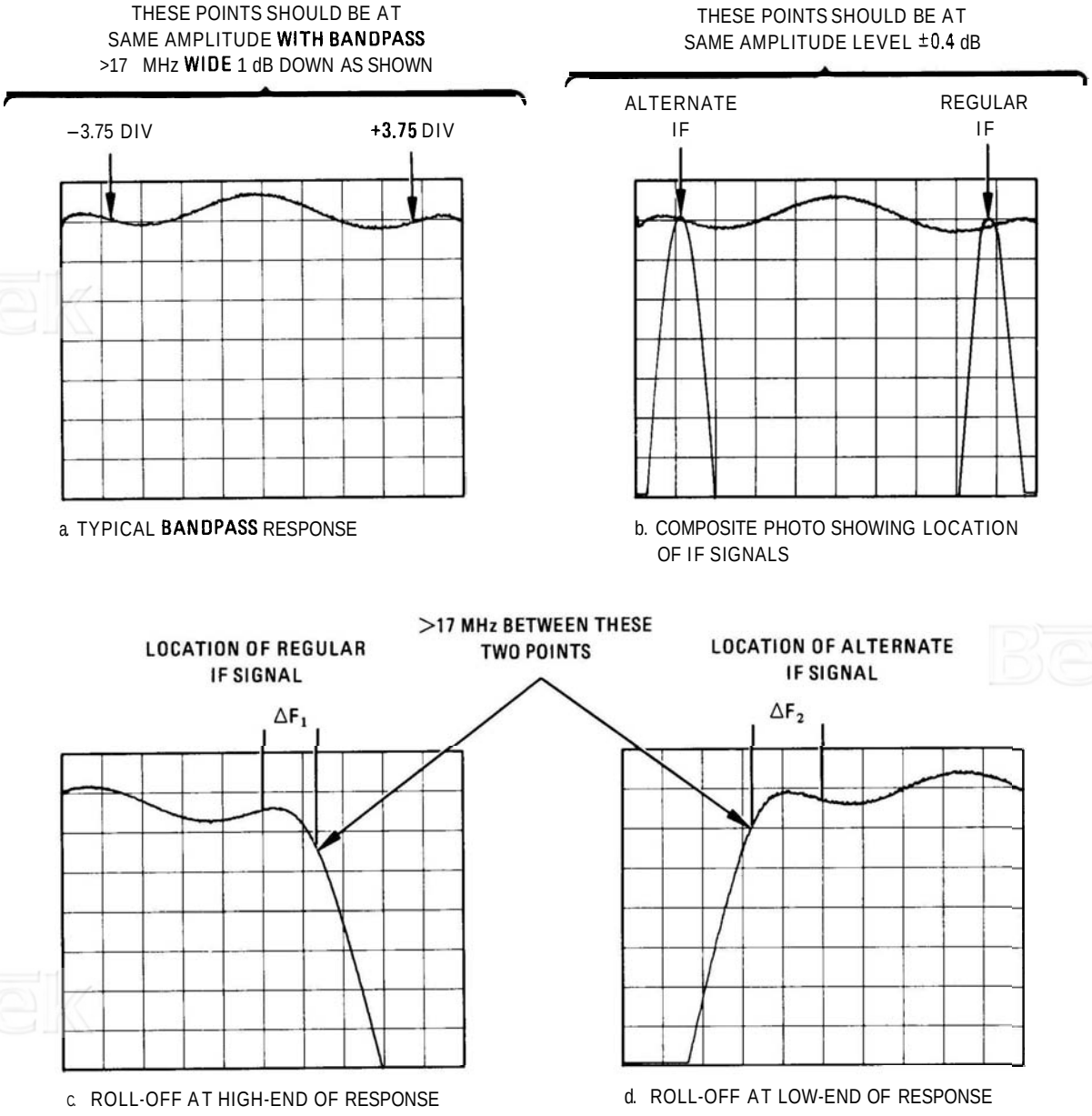

a. TYPICAL BANDPASS RESPONSE

b. COMPOSITE PHOTO SHOWING LOCATION OF IF SIGNALS

c. ROLL-OFF AT HIGH-END OF RESPONSE

d. ROLL-OFF AT LOW-END OF RESPONSE

ΔF_1 AND ΔF_2 MUST BE $\geq$1 MHz BUT $\leq$4 MHz

ΔF_1 MUST EQUAL ΔF_2 ±0.2 MHz

FIGURE 5-13. FIRST IF BANDPASS FILTER RESPONSE

ADJUSTMENTS

5-27. THIRD CONVERTER ADJUSTMENTS

REFERENCE:

A10 Schematic

DESCRIPTION:

First, the Third LO is adjusted for proper frequency using a frequency counter. Next, the second IF bandpass filter is aligned by injecting a frequency modulated 321.4 MHz signal at the necessary level and monitoring the 21.4 MHz output signal with another spectrum analyzer. The filter is aligned for a bandpass wide enough to accommodate any frequency drift occurring in the RF section of the analyzer and the amplitude necessary to provide the overall gain characteristics required by the analyzer.

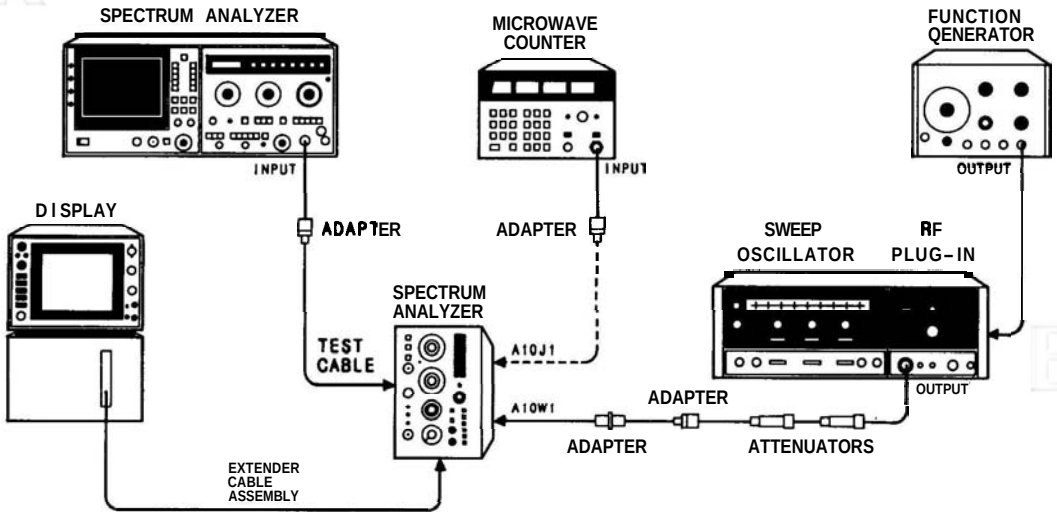

FIGURE 5-14. THIRD CONVERTER ADJUSTMENTS TEST SETUP

EQUIPMENT

Frequency Counter	HP 5342A
Sweep Oscillator	HP 8620C/86222A
Spectrum Analyzer	HP 8569B
Function Generator	HP 3310A
Test Cable, BNC (m) to SMB (f) (2 required)	HP85680-60093
Adapter, SMC (m) to SMC (m)	HP 1250-0827
Adapter, Type N (m) to BNC (f) (3 required)	HP 1250-0780
20 dB Attenuator	HP 8491B, Option 020
10 dB Attenuator	HP 8491B, Option 010
Test Cable, BNC (m) to SMC (f)	HP 11592-60001
Extender Cable Assembly	HP 5060-0303

ADJUSTMENTS

5-27. THIRD CONVERTER ADJUSTMENTS (Cont'd)

PROCEDURE:

1. Allow one-half hour warmup time of equipment with analyzer connected to mainframe with extender cable.

Third LO Adjustment

2. Connect frequency counter to A10J1 300 MHz output using the BNC to SMB test cable.
3. Adjust A10L12 LO ADJ for frequency counter indication of 300.00 MHz ±0.1 MHz.

Second IF Bandpass Filter Alignment

4. Disconnect blue cable A10W1 at second converter output connector A5J2.
5. Set sweep oscillator controls for an output of 321.4 MHz at 0 dBm (measured directly at output of sweep oscillator). Use the frequency counter and spectrum analyzer to set the output frequency and amplitude.
6. Connect output through 10 and 20 dB attenuators to cable disconnected in step 4, using the BNC to SMB test cable and SMB male to SMB male adapter.
7. Place analyzer on right side and connect test cable to Third Converter 21.4 MHz output connector. If connector is not present (some early instruments were not so supplied), it is necessary to solder a coaxial cable to XA10P1 pin 18 and ground (center conductor of coaxial cable to XA10P1 and shield to ground).
8. Connect test cable or soldered cable to 8569B spectrum analyzer input.
9. Set 8569B spectrum analyzer controls as follows:

TUNING	21.4 MHz
RESBW	300 kHz
FREQ SPAN/DIV	1 MHz/DIV
INPUTATTEN	10 dB
REF LEVEL dBm	– 10 dBm
Amplitude Scale	10 dB LOG
TIME/DIV	1 mSEC/DIV

10. Set HP 8559A RES BW to 1 kHz and TRIGGER to FREE RUN.
11. Center the 21.4 MHz signal on the 8569B spectrum analyzer, adjust reference level to place signal within top division on CRT, then change scale to 1 dB/DIV. Adjust REF LEVEL FINE to place signal peak in upper half of display.
12. Set function generator controls for a 200 Hz triangle wave output and connect to sweep oscillator RF Plug-In rear-panel FM input. Set FM/NORM/PL switch to FM.

ADJUSTMENTS

5-27. THIRD CONVERTER ADJUSTMENTS (Cont'd)

13. Adjust function generator amplitude and frequency for at least 10 MHz deviation (± 5 MHz) and an easy-to-view display on the 8569B spectrum analyzer. Refer to Figure 5-15. Increasing the frequency of the function generator will increase the swept frequency range of the sweep oscillator.

14. Adjust second IF bandpass filter adjustments A10C9 through A10C12 for the flattest bandpass response possible at the greatest amplitude possible centered at 21.4 MHz and at least 6 MHz (6 divisions) wide at 1 dB down from the highest point on the response curve. Do not sacrifice large amounts of amplitude for flatness. Some early instruments may display ripple on the response. This ripple should be ≤ 1 dB peak-to-peak. Peak of adjusted response should be at − 10 dBm ± 2 dB.

NOTE

The output level of the third converter is actually 0 dBm. Due to the mismatch error (≈9.5 dB) encountered in this measurement, the level measured will be approximately − 10 dBm.

15. Refer to Figure 5-15 for example of properly adjusted bandpass response and requirements for response.

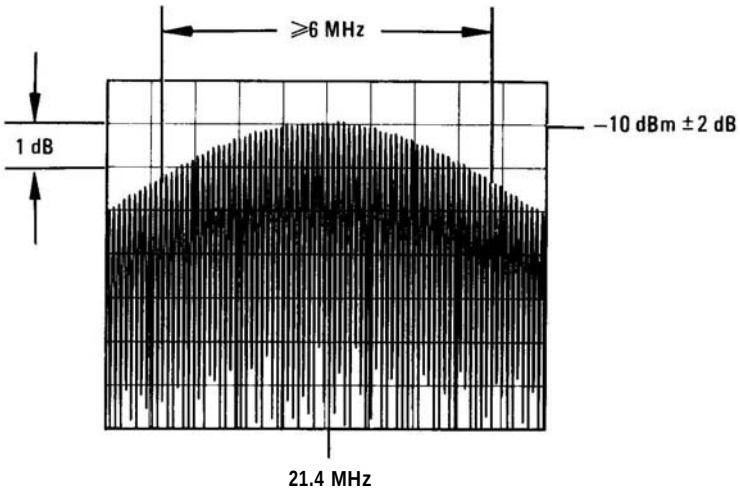

FIGURE 5-15. SECOND IF BANDPASS FILTER RESPONSE

ADJUSTMENTS

5-28. FREQUENCY RESPONSE ADJUSTMENTS

REFERENCE:

A3, A4, A5, A6, and A12 Schematics

NOTE

Perform CAL OUTPUT and REF LEVEL CAL adjustments (5-29) before proceeding with frequency response adjustments.

DESCRIPTION:

Frequency Response (flatness) is adjusted in six parts corresponding to the six harmonic bands of the analyzer. In each band, the analyzer is swept-tuned with a tracking signal source comprising a sweep oscillator and synchronizer. The sweep oscillator is tuned with an external sweep ramp generated by scaling the analyzer sweep output (AUX D) with a special tuning voltage circuit. This provides synchronization of the sweeps of the two instruments (sweep oscillator and analyzer), thus providing phase-lock of the two instruments. Each of the bands is adjusted for optimum flatness and all bands are adjusted for equal amplitudes.

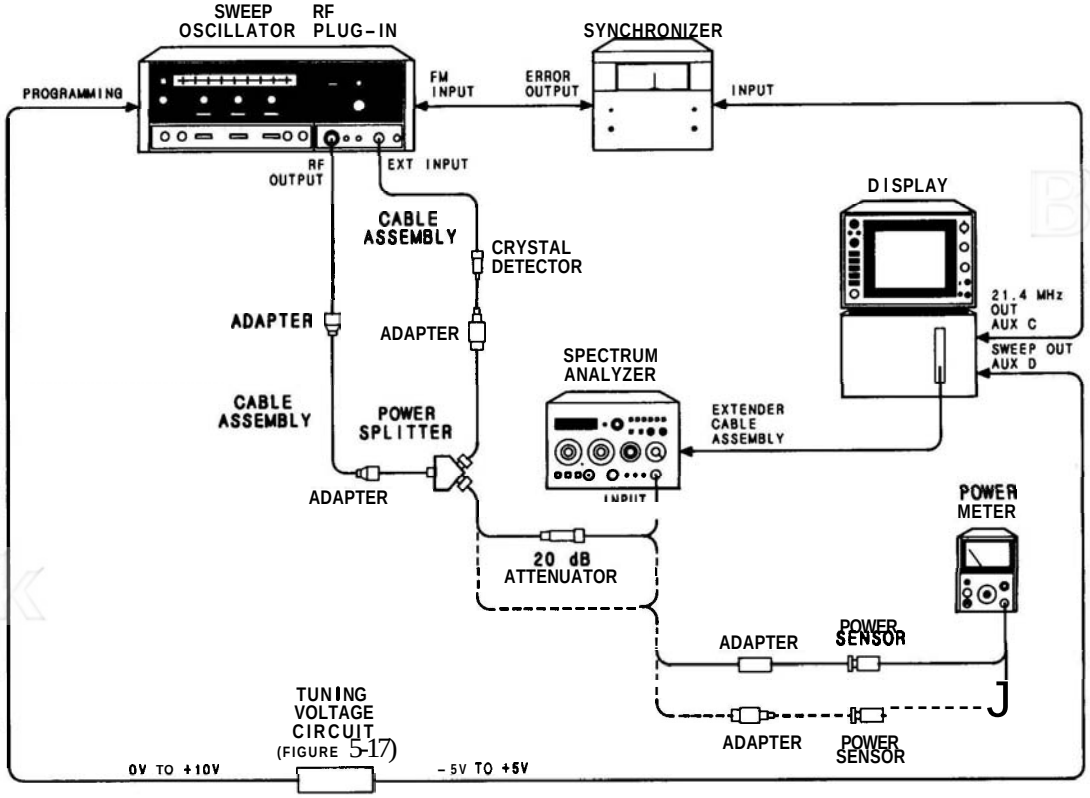

FIGURE 5-16. FREQUENCY RESPONSE ADJUSTMENTS TEST SETUP

ADJUSTMENTS

5-28. FREQUENCY RESPONSE ADJUSTMENTS(Cont'd)

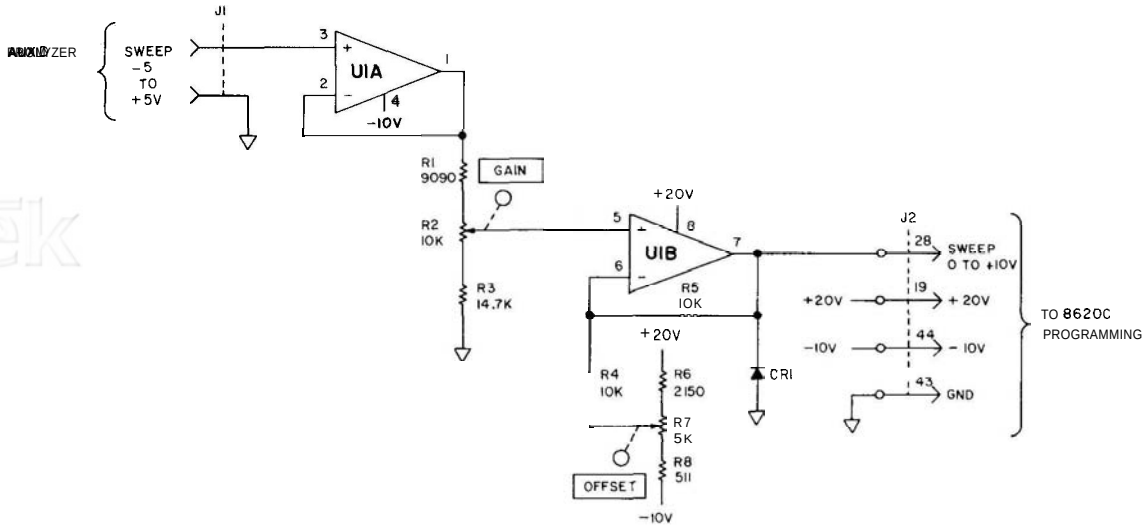

REFERENCE DESIGNATOR	HP PART NUMBER	C D	DESCRIPTION
CR1	1901-0040	1	DIODE-SWITCHING 30V 50 MA 2NS DO-35
J1	1250-0118	3	CONNECTOR-RF BNC FEMALE 50-OHM
J2	1251-0086	6	CONNECTOR-MICRORIBBON 50-PIN MALE
R1	0757-0288	1	RESISTOR 9.09K 1% .125W
R2	2100-3414	2	RESISTOR-VAR CONTROL 10K 20% LIN
R3	0698-3156	2	RESISTOR 14.7K 1% .125W
R4	0757-0442	9	RESISTOR 10K 1% .125W
R5	0757-0442	9	RESISTOR 10K 1% .125W
R6	0698-0084	9	RESISTOR 2.15K 1% .125W
R7	2100-3421	1	RESISTOR-VAR CONTROL 5K 20% LIN
R8	0757-0416	7	RESISTOR 511 1% .125W
U1	1826-0092	3	OP AMP-GENERAL PURPOSE DUAL TO-99

FIGURE 5-17. TUNING VOLTAGE CIRCUIT

ADJUSTMENTS

5-28. FREQUENCY RESPONSE ADJUSTMENTS (Cont'd)

EQUIPMENT:

Sweep Oscillator	HP 8620C
RF Plug-In (.01 – 2.4 GHz)	HP 8622A/B
RF Plug-In (2 – 22 GHz)	HP 86290B-H08
Synchronizer	HP 8709A-H10
Power Meter	HP 435A/B
Power Sensor (.01 – 18 GHz)	HP 8481A
Power Sensor (.05 – 26.5 GHz)	HP 8485A
Crystal Detector (.01 – 26.5 GHz)	HP 33330C
20 dB Attenuator	HP 8491B, Option 020
Tuning Voltage Circuit	Refer to Figure 5-17
Cable, SMA (m) to SMA (m)	HP8120-1578
Cable, BNC (m) to SMC (f)	HP 11592-60001
Adapter, Type N (m) to SMA (f) (2 required)	HP 1250-1250
Adapter, Type N (f) to SMA (f) (2 required)	HP 1250-1745
Adapter, Type N (f) to Type N (f)	HP 1250-1472
Extender Cable Assembly	HP 5060-0303
Power Splitter	11667A-C16

PROCEDURE:

1. Allow one-half hour warmup time of equipment with analyzer connected to mainframe with extender cable.

2. Connect equipment as shown in Figure 5-16 with power meter/power sensor connected to 20 dB attenuator and HP 86222A/B (.01 – 2.4 GHz plug-in) installed in sweep oscillator mainframe.

3. Set sweep oscillator controls as follows:

   Mainframe:

SWEEP MODE	EXT
MARKERS	OFF
All rear panel switches	OFF

   Plug-in

RF OFF/ON	OFF
ALC	EXT
POWER LEVEL	Fully CCW
FM/NORM/PL (rear-panel)	PL

4. Set synchronizer controls as follows:

POLARITY	–
SENSITIVITY	6 MHz/VOLT

ADJUSTMENTS

5-28. FREQUENCY RESPONSE ADJUSTMENTS (Cont'd)

5. Set spectrum analyzer controls as follows:

REF LEVEL FINE	0 dBm
REF LEVEL dBm	–20
INPUTATTEN	10 dB
Amplitude Scale	10 dB/DIV
FREQ SPAN/DIV	F (full)
RESOLUTIONBW	3 MHz
FREQUENCY BAND GHz	.01 – 3
TIME/DIV	20 msec
TRIGGER	FREE RUN
BLCLIP	OFF
VIDEOFILTER	MIN
ALTIF	OFF
SIGIDENT	OFF
TUNING	2.5 GHz

.01 – 3 GHz Adjustment

6. Place sweep oscillator plug-in RF OFF/ON switch to ON.

7. Adjust sweep oscillator controls for a CW output of 2 GHz at –7 dBm.

8. Disconnect power meter/power sensor and connect 20 dB attenuator directly to analyzer RF INPUT as shown in Figure 5-16.

9. Adjust sweep oscillator controls for full sweep.

10. Adjust Tuning Voltage Circuit GAIN control fully clockwise then adjust OFFSET control to center phase-locked signal on CRT. Refer to Figure 5-18a.

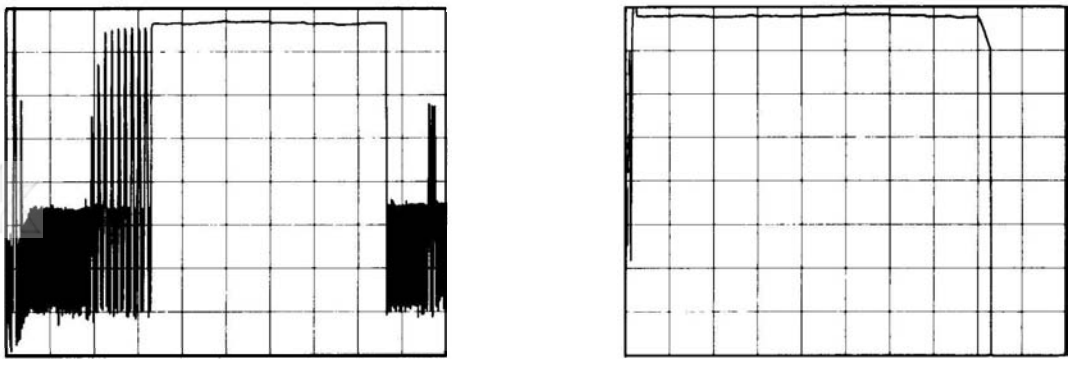

FIGURE 5-18. ILLUSTRATION OF PHASE-LOCKING PROCEDURE

ADJUSTMENTS

5-28. FREQUENCY RESPONSE ADJUSTMENTS (Cont'd)

11. Adjust Tuning Voltage Circuit GAIN control to expand the phase-locked display over 8 1/2 divisions on CRT (.01 – 2.4 GHz). Refer to Figure 5-18b. It may be necessary to readjust OFFSET slightly to achieve phase-lock over entire range.

12. Optimum phase-lock is indicated by a smooth trace over full swept frequency range on CRT and minimum needle movement on synchronizer phase error meter.

13. Place CRT trace in top division of display using analyzer REF LEVEL FINE control.

14. Change spectrum analyzer Amplitude Scale to 1 dB/DIV and adjust REF LEVEL FINE control to place trace in upper half of display.

15. Remove CAUTION label (PC Board) from cover of A12 Step Gain by removing two pozi-drive screws.

16. Adjust A12R72 V1 (bias) for maximum amplitude of trace on CRT.

17. Adjust A12R47 1B (tilt) for best overall flatness of trace on CRT.

NOTE

Remember, you are viewing only a portion (.01 – 2.4 GHz) of Band 1. The remainder of Band 1 may have an effect on this adjustment.

18. Note highest and lowest points on CRT trace for reference. Also note level of trace at 2.1 GHz position on CRT (8th vertical graticule line).

Highest _____ Lowest _____ 2.1 GHz _____

19. Place sweep oscillator LINE switch OFF.

20. Disconnect cables from HP 86222A/B (.01 – 2.4 GHz plug-in) and remove plug-in from sweep oscillator mainframe.

21. Install HP 86290B (2 – 18.6 GHz plug-in) or HP 86290B-H08 (2 – 22 GHz plug-in), if available, in sweep oscillator mainframe and reconnect cables as shown in Figure 5-16 with 20 dB attenuator connected to analyzer RF INPUT.

22. Set RF plug-in controls the same as for the plug-in removed (refer to step 3) and select Band 4 (2 – 18.6 or 2 – 22 GHz) on sweep oscillator mainframe.

23. Place RF plug-in RF OFF/ON switch ON. Change analyzer Amplitude Scale to 10 dB/DIV.

24. Adjust sweep oscillator for swept output from 2 to 3 GHz.

25. Adjust spectrum analyzer TUNING controls for FREQUENCY GHz indication of 2.500 and change FREQ SPAN/DIV to 100 MHz. Make sure RES BW remains at 3 MHz.

ADJUSTMENTS

5-28. FREQUENCY RESPONSE ADJUSTMENTS(Cont'd)

26. Adjust Tuning Voltage Circuit GAIN and OFFSET controls to phase-lock swept signal from 2 to 3 GHz.

27. Adjust RF plug-in POWER LEVEL control to place trace at approximately – 27 dBm on CRT.

28. Change spectrum analyzer Amplitude Scale to 1 dB/DIV.

29. Adjust RF plug-in POWER LEVEL control to place 2.1 GHz position of CRT trace to same level as that noted in step 18.

30. Note flatness of trace from 2 to 3 GHz. Total deviation of trace from .01 to 3 GHz should not exceed 2.0 dB.

31. Center trace about the sixth horizontal graticule line on the CRT using analyzer REF LEVEL FINE control. Do not change this setting for remainder of procedure. This will be used as amplitude reference for remaining frequency bands.

NOTE

Be careful during the adjustment of the remaining frequency bands. It is possible to achieve a phase-locked display of a frequency range other than the one selected on the spectrum analyzer. For example, it is possible to achieve a phase-locked display for 6 – 9 GHz when 3 – 9 GHz has been selected. This can be avoided by paying close attention to synchronizer polarity and RF plug-in band switch points. Figure 5-19 illustrates the typical appearance of each of the bands. Use it for reference.

6 to 9 GHz Adjustment

32. Change synchronizer POLARITY to +.

33. Change spectrum analyzer FREQ SPAN/DIV to F (full), Amplitude Scale to 10 dB/DIV, and FREQUENCY BAND GHz to 6 – 9. Set TUNING to above 9 GHz.

34. Adjust sweep oscillator for swept output from 6 to 9 GHz.

35. Adjust Tuning Voltage Circuit GAIN and OFFSET controls to phase-lock swept signal from 6 to 9 GHz. Refer to Figure 5-19b.

36. Change spectrum analyzer Amplitude Scale to 1 dB/DIV.

37. Adjust A12R58 2A (offset) and A12R48 2B (tilt) for best overall flatness of trace from 6 to 9 GHz with trace approximately centered about the sixth horizontal graticule line on the CRT.

38. Total deviation of CRT trace from 6 to 9 GHz should not exceed 2.0 dB.

ADJUSTMENTS

5-28. FREQUENCY RESPONSE ADJUSTMENTS (Cont'd)

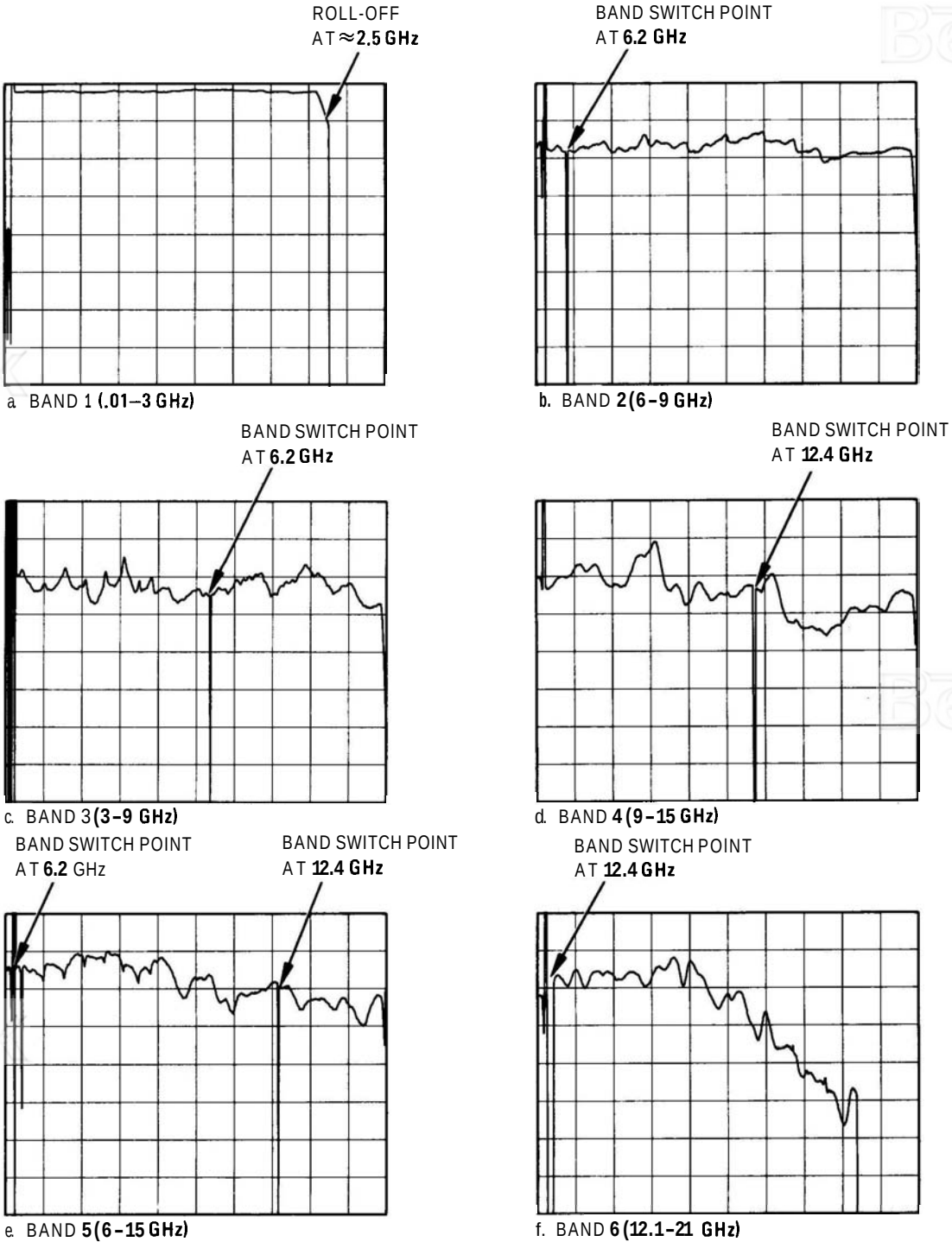

FIGURE 5-19. TYPICAL PHASE-LOCKED RESPONSE OF EACH FREQUENCY BAND

ADJUSTMENTS

5-28. FREQUENCY RESPONSE ADJUSTMENTS (Cont'd)

3 to 9 GHz Adjustment

39. Change synchronizer POLARITY to –.

40. Change spectrum analyzer Amplitude Scale to 10 dB/DIV and FREQUENCY BAND GHz to 3 – 9.

41. Adjust sweep oscillator for swept output from 3 to 9 GHz.

42. Adjust Tuning Voltage Circuit GAIN and OFFSET controls to phase-lock swept signal from 3 to 9 GHz. Refer to Figure 5-19c.

43. Change spectrum analyzer Amplitude Scale to 1 dB/DIV.

44. Adjust A12R83 V2 – (bias), A12R59 3A (offset), and A12R49 3B (tilt) for best overall flatness of trace from 3 to 9 GHz with trace approximately centered about the sixth horizontal graticule line on the CRT.

45. Total deviation of trace from 3 to 9 GHz should not exceed 3.0 dB.

9 to 15 GHz Adjustment

46. Change synchronizer POLARITY to +.

47. Change spectrum analyzer Amplitude Scale to 10 dB/DIV and FREQUENCY BAND GHz to 9 – 15.

48. Adjust sweep oscillator for swept output from 9 to 15 GHz.

49. Adjust Tuning Voltage Circuit GAIN and OFFSET controls to phase-lock swept signal from 9 to 15 GHz. Refer to Figure 5-19d.

50. Change spectrum analyzer Amplitude Scale to 1 dB/DIV.

51. Adjust A12R87 V2 + (bias), A12R60 4A (offset), and A12R51 4B (tilt) for best overall flatness of trace from 9 to 15 GHz with trace approximately centered about the sixth horizontal graticule line on the CRT.

52. Total deviation of trace from 9 to 15 GHz should not exceed 3.6 dB.

6 to 16 GHz Adjustment

53. Change synchronizer POLARITY to –.

54. Change spectrum analyzer Amplitude Scale to 10 dB/DIV and FREQUENCY BAND GHz to 6 – 15.

55. Adjust sweep oscillator for swept output from 6 to 15 GHz.

56. Adjust Tuning Voltage Circuit GAIN and OFFSET controls to phase-lock swept signal from 6 to 15 GHz. Refer to Figure 5-19e.

ADJUSTMENTS

5-28. FREQUENCY RESPONSE ADJUSTMENTS (Cont'd)

57. Change spectrum analyzer Amplitude Scale to 1 dB/DIV.

58. Adjust A12R71 V3 – (bias), A12R61 5A (offset), A12R53 5B (tilt), and A12R54 5C (breakpoint) for best overall flatness of trace from 6 to 15 GHz with trace approximately centered about the sixth horizontal graticule line on the CRT.

59. Total deviation of trace from 6 to 15 GHz should not exceed 4.2 dB.

12.1 to 21 GHz Adjustment

NOTE

If an HP 86290B-H08 (2–22 GHz plug-in) is not available, a standard HP 86290B (2 – 18.6 GHz plug-in) may be used to adjust the spectrum analyzer flatness from 12.1 to 18.6 GHz using this procedure.

60. Change synchronizer POLARITY to +.

61. Change spectrum analyzer Amplitude Scale to 10 dB/DIV and FREQUENCY SPAN GHz to 12.1 – 21.

62. Adjust sweep oscillator for swept output from 12 to 18.6 GHz or 12 to 21 GHz, depending on which RF plug-in is used.

63. Adjust Tuning Voltage Circuit GAIN and OFFSET controls to phase-lock swept signal from 12 to 18.6 GHz or 12 to 21 GHz. Refer to Figure 5-19f.

64. Change spectrum analyzer Amplitude Scale to 1 dB/DIV.

65. Adjust A12R70 V3 + (bias), A12R62 6A (offset), A12R55 6B (tilt), and A12R56 6C (breakpoint) for best overall flatness of trace from 12.1 to 18.6 GHz or 12.1 to 21 GHz with trace approximately centered about the sixth horizontal graticule line on the CRT.

66. Total deviation of trace from 12.1 to 18 GHz should not exceed 4.6 dB and from 18 to 21 GHz should not exceed 6.0 dB.

67. If unable to achieve flatness specifications, it may be necessary to plot a characterization curve of the sweep oscillator output from 12 to 21 GHz. This can be done by measuring the power output of the sweep oscillator (at the 20 dB attenuator) every 500 MHz from 12 to 21 GHz using a power meter. The values obtained can then be plotted on the CRT and flatness adjusted to this corrected curve. Total deviation then becomes the difference between the largest positive and largest negative deviation from the plotted curve.

    This characterization will require the use of an 18 – 21 GHz thermistor mount and K-Band waveguide adapter in addition to equipment previously used. Recommended equipment is listed under EQUIPMENT in this procedure along with previously used equipment.

ADJUSTMENTS

5-29. CAL OUTPUT AND REF LEVEL CAL ADJUSTMENTS

NOTE

These adjustments should be followed by frequency response adjustments, since adjustment of A12R57 1A (offset) will shift the frequency response of Band 1 (.01 – 3 GHz).

REFERENCE:

A10 and A12 Schematics

DESCRIPTION:

The 35 MHz CAL OUTPUT signal is adjusted for proper amplitude and frequency using a power meter and frequency counter. Adjustment range of the front-panel REF LEVEL CAL control is set using the CAL OUTPUT signal as a reference.

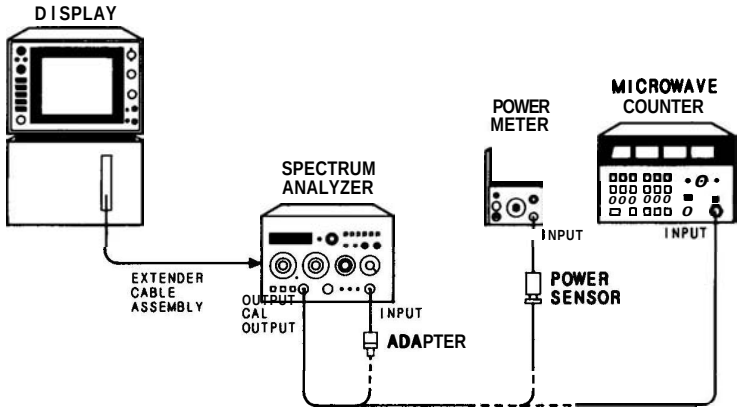

FIGURE 5-20. CAL OUTPUT AND REF LEVEL CAL ADJUSTMENTS TEST SETUP

EQUIPMENT:

Frequency Counter	HP 5342A
Power Meter	HP 432A/435A/B
Power Sensor	HP 8481A
Adapter, Type N (m) to BNC (f)	HP 1250-0780
Extender Cable Assembly	HP 5060-0303

ADJUSTMENTS

5-29. CAL OUTPUT AND REF LEVEL CAL ADJUSTMENTS (Cont'd)

PROCEDURE:

CAL OUTPUT Adjustment

1. Allow one-half hour warmup time of equipment with spectrum analyzer connected to mainframe with extender cable.
2. Connect power meter/power sensor to front-panel CAL OUTPUT connector as shown in Figure 5-20.
3. Place spectrum analyzer on its right side. Adjust A10R13 CAL AMPL for power meter indication of −10.0 dBm ±0.1 dB. A10R13 is accessed through motherboard.
4. Disconnect power meter/power sensor and connect frequency counter to CAL OUTPUT connector.
5. Adjust A10C46 CAL FREQ for frequency counter indication of 35.00 MHz ±0.01 MHz. A10C46 is accessed through motherboard.
6. Repeat steps 2 through 5 until CAL OUTPUT signal is properly adjusted for both amplitude and frequency.
7. Connect CAL OUTPUT to analyzer INPUT.
8. If not already removed, remove CAUTION label (PC Board) from A12 Step Gain.
9. Set spectrum analyzer controls as follows:

Amplitude Scale	10 dB/DIV
REF LEVEL dBm	0
INPUT ATTEN	10 dB
FREQ SPAN/DIV	1 MHz
RESOLUTIONBW	1 MHz
TIME/DIV	AUTO
TRIGGER	FREE RUN
FREQUENCY BAND GHz	.01 – 3

10. Center 35 MHz calibration signal on CRT using TUNING controls.
11. Adjust front-panel REF LEVEL CAL fully counterclockwise.
12. Change Amplitude Scale to 1 dB/DIV and adjust REF LEVEL FINE if necessary to place signal peak on first horizontal graticule line above bottom reference line of CRT.
13. Adjust front-panel REF LEVEL CAL to raise signal peak three divisions (3 dB) on CRT (to fourth graticule line above bottom reference line on CRT).
14. Change Amplitude Scale to 10 dB/DIV, REF LEVEL dBm to −10, and set REF LEVEL FINE to 0 dBm.

ADJUSTMENTS

5-29. CAL OUTPUT AND REF LEVEL CAL ADJUSTMENTS(Cont'd)

15. Signal peak should now be approximately at top graticule line (Reference Level) on CRT.

16. Switch between 10 dB/DIV and LIN while adjusting A12R57 1A (offset) to place signal peak at same level in both 10 dB/DIV and LIN.

17. Level at which signal peaks are coincident should be at top graticule line (Reference Level). If not, adjust front-panel VERTICAL GAIN to place signal peak at Reference Level line. Be sure VERTICAL POSN is properly adjusted for baseline on bottom graticule line.

18. Replace CAUTION label (PC Board) on A12 Step Gain.

ADJUSTMENTS

5-30. FREQUENCY DISPLAY ADJUSTMENTS

REFERENCE:

A1 and A8 Schematics

DESCRIPTION:

The Digital Panel Meter (DPM) OFFSET and GAIN controls are adjusted for proper FREQUENCY display indication at corresponding tuning voltage (DPMA) levels.

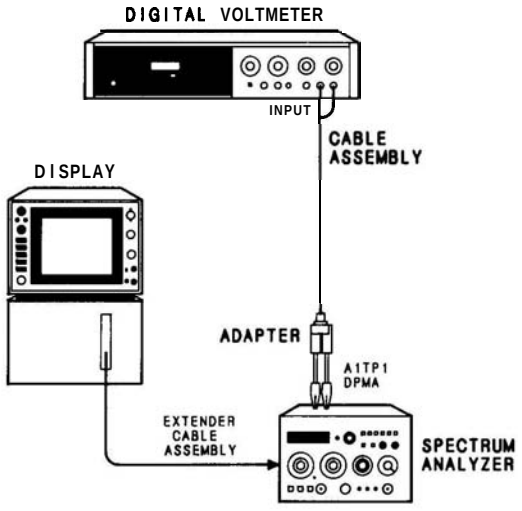

FIGURE 5-21. FREQUENCY DISPLAY ADJUSTMENTS TEST SETUP

EQUIPMENT:

Digital Voltmeter	HP 3456A
Cable, BNC (m) to Banana Plugs	HP 10111A
Extender Cable Assembly	HP 5060-0303
Adapter, BNC (f) to Alligator Clips	HP 8120-1292

ADJUSTMENTS

5-30. FREQUENCY DISPLAY ADJUSTMENTS(Cont'd)

PROCEDURE:

1. Allow one-half hour warmup time of equipment with analyzer connected to mainframe with extender cable.
2. Jumper A8TP5 DPM to ground.
3. Set front-panel FREQUENCY BAND GHz to Band 1 (.01 – 3).
4. Connect DVM to A1A2TP1 DPMA. A1A2TP1 is located below the board and is accessible through cut-out in left side gusset.
5. Adjust A8R61 DPM ZERO for DVM indication of 0.000 Vdc.
6. Adjust A1A2R29 OFFSET for front-panel FREQUENCY GHz indication of 0.000.
7. Remove jumper from A8TP5 to ground.
8. Select Band 6 (12.1 – 21) on analyzer.
9. Adjust front-panel TUNING control for DVM indication of – 4.000 Vdc.
10. Adjust A1A2R28 GAIN for front-panel FREQUENCY indication of 20.000.

SECTION VI
REPLACEABLE PARTS

6-1. INTRODUCTION

6-2. The replaceable parts list breakdown for each major assembly is located in Section VIII, following the circuit description for the assembly. This section contains information for ordering the replacement parts not listed in Section VIII. Table 6-1 includes a list of reference designations and a list of abbreviations used in the parts list. Table 6-2 lists names and addresses that correspond to the manufacturer code numbers in the parts list. Table 6-3 lists the replaceable parts in alpha-numerical order by reference designation.

6-3. REPLACEABLE PARTS LIST

6-4. Table 6-3, the list of replaceable parts, is organized as follows:

1. Major assemblies and their part numbers.
2. Accessories supplied and their part numbers.
3. Miscellaneous chassis parts and their part numbers.
4. Mechanical chassis parts and their part numbers.

6-5. The following information is listed for each part:

1. The Hewlett-Packard part number.
2. The part number check digit (CD).
3. The total quantity (Qty) in the instrument. This quantity is given only once, at the first appearance of the part in the list.
4. The description of the part.
5. A five-digit code indicating a typical manufacturer of the part.
6. The manufacturer's part number.

6-6. ORDERING INFORMATION

6-7. To order a part listed in the replaceable parts table, quote the Hewlett-Packard part number (with check digit), indicate the quantity required, and address the order to the nearest Hewlett-Packard office. The check digit will ensure accurate and timely processing of your order.

6-8. To order a part that is not listed in the replaceable parts table, include the instrument model number, instrument serial number, the description and function of the part, and the number of parts required. Address the order to the nearest Hewlett-Packard office.

TABLE 6-1. REFERENCE DESIGNATIONS AND ABBREVIATIONS (1 OF 3)

REFERENCE DESIGNATIONS

A ..... Assembly
AT ..... Attenuator, Isolator, Limiter, Termination
B ..... Fan, Motor
BT ..... Battery
C ..... Capacitor
CP ..... Coupler
CR ..... Diode, Diode Thyristor, Step Recovery Diode, Varactor
DC ..... Directional Coupler
DL ..... Delay Line
DS ..... Annunciator, Lamp, Light Emitting Diode (LED), Signaling Device (Visible)
E ..... Miscellaneous Electrical Part
F ..... Fuse
FL ..... Filter
HY ..... Circulator
J ..... Electrical Connector (Stationary Portion), Jack
K ..... Relay
L ..... Coil, Inductor
M ..... Meter
MP ..... Miscellaneous Mechanical Part
P ..... Electrical Connector (Movable Portion), Plug
Q ..... Silicon Controlled Rectifier (SCR), Transistor, Triode Thyristor
R ..... Resistor
RT ..... Thermistor
S ..... Switch
T ..... Transformer
TB ..... Terminal Board
TC ..... Thermocouple
TP ..... Test Point
U ..... Integrated Circuit, Microcircuit
V ..... Electron Tube
VR ..... Breakdown Diode (Zener), Voltage Regulator
W ..... Cable, Wire, Jumper
X ..... Socket
Y ..... Crystal Unit (Piezoelectric, Quartz)
Z ..... Tuned Cavity, Tuned Circuit

ABBREVIATIONS

A

A ..... Across Flats, Acrylic, Air (Dry Method), Ampere
ADJ ..... Adjust, Adjustment
ANSI ..... American National Standards Institute (formerly USASI-ASA)
ASSY ..... Assembly
AWG ..... American Wire Gage

B

BCD ..... Binary Coded Decimal
BD ..... Board, Bundle
BE-CU ..... Beryllium Copper
BNC ..... Type of Connector
BRG ..... Bearing, Boring
BRS ..... Brass
BSC ..... Basic
BTN ..... Button

C

C ..... Capacitance, Capacitor, Center Tapped, Cermet, Cold, Compression
CCP ..... Carbon Composition Plastic
CD ..... Cadmium, Card, Cord
CER ..... Ceramic
CHAM ..... Chamfer
CHAR ..... Character, Characteristic, Charcoal
CMOS ..... Complementary Metal Oxide Semiconductor
CNDCT ..... Conducting, Conductive, Conductivity, Conductor
CONT ..... Contact, Continuous, Control, Controller
CONV ..... Converter
CPRSN ..... Compression
CUP-PT ..... Cup Point
CW ..... Clockwise, Continuous Wave

D

D ..... Deep, Depletion, Depth, Diameter, Direct Current
DA ..... Darlington
DAP-GL ..... Diallyl Phthalate Glass
DBL ..... Double
DCDR ..... Decoder
DEG ..... Degree
D-HOLE ..... D-Shaped Hole
DIA ..... Diameter
DIP ..... Dual In-Line Package
DIP-SLDR ..... Dip Solder
D-MODE ..... Depletion Mode
DO ..... Package Type Designation
DP ..... Deep, Depth, Diametric Pitch, Dip
DP3T ..... Double Pole Three Throw
DPDT ..... Double Pole Double Throw
DWL ..... Dowel

E

E-R ..... E-Ring
EXT ..... Extended, Extension, External, Extinguish

F

F ..... Fahrenheit, Farad, Female, Film (Resistor), Fixed, Flange, Frequency
FC ..... Carbon Film/Composition, Edge of Cutoff Frequency, Face
FDTHRU ..... Feed Through
FEM ..... Female
FIL-HD ..... Fillister Head
FL ..... Flash, Flat, Fluid
FLAT-PT ..... Flat Point
FR ..... Front
FREQ ..... Frequency
FT ..... Current Gain Bandwidth Product (Transition Frequency), Feet, Foot
FXD ..... Fixed

G

GEN ..... General, Generator
GND ..... Ground
GP ..... General Purpose, Group

H

H ..... Henry, High
HDW ..... Hardware
HEX ..... Hexadecimal, Hexagon, Hexagonal
HLCL ..... Helical
HP ..... Hewlett-Packard Company, High Pass

I

IC ..... Collector Current, Integrated Circuit
ID ..... Identification, Inside Diameter
IF ..... Forward Current, Intermediate Frequency
IN ..... Inch
INCL ..... Including
INT ..... Integral, Intensity, Internal

TABLE 6-1. REFERENCE DESIGNATIONS AND ABBREVIATIONS (2 OF 3)

J

J-FET ..... Junction Field Effect Transistor
JFET ..... Junction Field Effect Transistor

K

K ..... Kelvin, Key, Kilo, Potassium
KNRLD ..... Knurled
KVDC ..... Kilovolts Direct Current

L

LED ..... Light Emitting Diode
LG ..... Length, Long
LIN ..... Linear, Linearity
LK ..... Link, Lock
LKG ..... Leakage, Locking
LUM ..... Luminous

M

M ..... Male, Maximum, Mega, Mil, Milli, Mode
MA ..... Milliampere
MACH ..... Machined
MAX ..... Maximum
MC ..... Molded Carbon Composition
MET ..... Metal, Metallized
MHZ ..... Megahertz
MINTR ..... Miniature
MIT ..... Miter
MLD ..... Mold, Molded
MM ..... Magnetized Material. Millimeter
MOM ..... Momentary
MTG ..... Mounting
MTLC ..... Metallic
MW ..... Milliwatt

N

N ..... Nano, None
N-CHAN ..... N-Channel
NH ..... Nanohenry
NM ..... Nanometer, Nonmetallic
NO ..... Normally Open, Number
NOM ..... Nominal
NPN ..... Negative Positive Negative (Transistor)
NS ..... Nanosecond, Non-Shorting, Nose
NUM ..... Numeric
NYL ..... Nylon (Polyamide)

O

OA ..... Over-All
OD ..... Outside Diameter
OP AMP ..... Operational Amplifier
OPT ..... Optical, Option, Optional

P

PA ..... Picoampere, Power Amplifier
PAN-HD ..... Pan Head
PAR ..... Parallel, Parity
PB ..... Lead (Metal), Pushbutton
PC ..... Printed Circuit
PCB ..... Printed Circuit Board
P-CHAN ..... P-Channel
PD ..... Pad, Power Dissipation
PF ..... Picofarad, Power Factor
PKG ..... Package
PLSTC ..... Plastic
PNL ..... Panel
PNP ..... Positive Negative Positive (Transistor)
POLYC ..... Polycarbonate
POLYE ..... Polyester
POT ..... Potentiometer
POZI ..... Pozidriv Recess
PREC ..... Precision
PRP ..... Purple, Purpose
PSTN ..... Piston
PT ..... Part, Point, Pulse Time
PW ..... Pulse Width

Q

Q ..... Figure of Merit

R

R ..... Range, Red, Resistance, Resistor, Right, Ring
REF ..... Reference
RES ..... Resistance, Resistor
RF ..... Radio Frequency
RGD ..... Rigid
RND ..... Round
RR ..... Rear
RVT ..... Rivet, Riveted

S

SAWR ..... Surface Acoustic Wave Resonator
SEG ..... Segment
SGL ..... Single
SI ..... Silicon, Square Inch
SL ..... Slide, Slow
SLT ..... Slot, Slotted
SMA ..... Subminiature, A Type (Threaded Connector)
SMB ..... Subminiature, B Type (Slip-On Connector
SMC ..... Subminiature, C Type (Threaded Connector)
SPCG ..... Spacing
SPDT ..... Single Pole Double Throw
SPST ..... Single Pole Single Throw
SQ ..... Square
SST ..... Stainless Steel
STL ..... Steel
SUBMIN ..... Subminiature
SZ ..... Size

T

T ..... Teeth, Temperature, Thickness, Time, Timed, Tooth, Typical
TA ..... Ambient Temperature, Tantalum
TC ..... Temperature Coefficient
THD ..... Thread, Threaded
THK ..... Thick
TO ..... Package Type Designation
TPG ..... Tapping
TR-HD ..... Truss Head
TRMR ..... Trimmer
TRN ..... Turn, Turns
TRSN ..... Torsion

U

UCD ..... Microcandela
UF ..... Microfarad
UH ..... Microhenry
UL ..... Microliter, Underwriters' Laboratories, Inc.
UNHDND ..... Unhardened

V

V ..... Variable, Violet, Volt, Voltage
VAC ..... Vacuum, Volts, Alternating Current
VAR ..... Variable
VDC ..... Volts, Direct Current

W

W ..... Watt, Wattage, White, Wide. Width
W/SW ..... With Switch
WW ..... Wire Wound

X

X ..... By (Used With Dimensions), Reactance

Y

YIG ..... Yttrium-Iron-Garnet

Z

ZNR ..... Zener

TABLE 6-1. REFERENCE DESIGNATIONS AND ABBREVIATIONS (3 OF 3)

MULTIPLIERS					
Abbreviation	**Prefix**	**Multiple**	**Abbreviation**	**Prefix**	**Multiple**
T	tera	10^{12}	m	milli	10^{-3}
G	giga	10^{9}	μ	micro	10^{-6}
M	mega	10^{6}	n	nano	10^{-9}
k	kilo	10^{3}	P	pico	10^{-12}
da	deka	10	f	femto	10^{-15}
d	deci	10^{-1}	a	atto	10^{-18}
c	centi	10^{-2}			

TABLE 6-2. MANUFACTURERS CODE LIST

Mfr. No.	Manufacturer Name	Address	Zip Code
01121	ALLEN-BRADLEY CO	MILWAUKEE, WI	53204
01295	TEXAS INSTR INC SEMICOND CMPNT DIV	DALLAS, TX	75222
02111	SPECTROL ELECTRONICS CORP	CITY OF IND, CA	91745
02660	BUNKER RAMO CORP AMPHENOL CONN DIV	BROADVILLE, IL	60153
02768	ILLINOIS TOOL WORKS INC FASTEX DIV	DES PLAINES, IL	60016
03888	K D I PYROFILM CORP	WHIPPANY, NJ	07981
04713	MOTOROLA SEMICONDUCTOR PRODUCTS	PHOENIX, AZ	85008
06383	PANDUIT CORP	TINLEY PARK, IL	60477
06665	PRECISION MONOLITHICS INC	SANTA CLARA, CA	95050
07088	KELVIN ELECTRIC CO	VAN NWS, CA	91401
07263	FAIRCHILD SEMICONDUCTOR DIV	MOUNTAIN VIEW, CA	94042
11236	CTS OF BERNE INC	BERNE, IN	46711
17856	SILICONIX INC	SANTA CLARA, CA	95054
19701	MEPCO/ELECTRA CORP	MINERAL WELLS, TX	76067
20940	MICRO-OHM CORP	EL MONTE, CA	91731
24046	TRANSITRON ELECTRONIC CORP	WAKEFIELD, MA	01880
24546	CORNING GLASS WORKS (BRADFORD)	BRADFORD, PA	16701
27014	NATIONAL SEMICONDUCTOR CORP	SANTA CLARA, CA	95051
28480	HEWLETT-PACKARD CO CORPORATE HQ	PALO ALTO, CA	94304
3L585	RCA CORP SOLID STATE DIV	SOMERVILLE, NJ	
30161	AAVID ENGINEERING INC	LACONIA, NH	03246
30983	MEPCO/ELECTRA CORP	SAN DIEGO, CA	92121
32997	BOURNS INC TRIMPOT PROD DIV	RIVERSIDE, CA	92507
33095	SPECTRUM CONTROL INC	FAIRVIEW, PA	16415
37942	MALLORY P R AND CO INC	INDIANAPOLIS, IN	46206
52063	EXAR INTEGRATED SYSTEMS INC	SUNNYVALE, CA	94086
52763	STETTNER ELECTRONICS INC	CHATTANOOGA, TN	13035
56289	SPRAGUE ELECTRIC CO	NORTH ADAMS, MA	01247
71041	BOSTON GEAR WKS DIV OF NA ROCKWELL	QUINCY, MA	02171
72136	ELECTRO MOTIVE CORP	FLORENCE, SC	06226
72982	ERIE TECHNOLOGICAL PRODUCTS INC	ERIE, PA	16512
73138	BECKMAN INSTRUMENTS INC HELIPOT DIV	FULLERTON, CA	92634
74970	JOHNSON E F CO	WASECA, MN	56093
78707	TEK BEARING CO INC	NEW YORK, NY	10013

TABLE 6-3. REPLACEABLE PARTS

Reference Designator	HP Part Number	C D	Qty	Description	Mfr. Code	Mfr. Part Number
A1				DIGITAL PANEL METER ASSEMBLY		
A1A1	08559-60079	5	1	DPM DISPLAY ASSEMBLY	28480	08559-60079
A1A2	08559-60078	4	1	DPM DRIVER ASSEMBLY	28480	08559-60078
A2	08559-60065	9	1	FRONT SWITCH ASSEMBLY	28480	08559-60065
A2A1	08559-60069	3	1	FRONT SWITCHBOARD ASSEMBLY	28480	08559-60069
A3	5086-7362	8	1	INPUT ATTENUATOR ASSEMBLY	28480	5086-7362
A4	5086-7302	0	1	FIRST MIXER ASSEMBLY	28480	5086-7302
A5	08559-60082	0	1	SECOND CONVERTER ASSEMBLY	28480	08559-60082
A6	5086-7329	1	1	YIG OSCILLATOR ASSEMBLY	28480	5086-7329
A7	08559-60077	3	1	FREQUENCY CONTROL ASSEMBLY	28480	08559-60077
A8	08559-60075	1	1	MARKER ASSEMBLY	28480	08559-60075
A9	08559-60083	1	1	SWEEP GENERATOR/BANDWIDTH CONTROL ASSEMBLY	28480	08559-60083
A10	08559-60080	8	1	THIRD CONVERTER ASSEMBLY	28480	08559-60080
A11	08559-60058	0	1	BANDWIDTH FILTER NO. 1 ASSEMBLY	28480	08559-60058
A12	08559-60026	2	1	STEP GAIN ASSEMBLY	28480	08559-60026
A13	08559-60058	0	1	BANDWIDTH FILTER NO. 2 ASSEMBLY	28480	08559-60058
A14	5061-5411	2	1	LOG AMPLIFIER ASSEMBLY	28480	5061-5411
A15	08559-60029	5	1	VERTICAL DRIVER/BLANKING ASSEMBLY	28480	08559-60029
A16	08559-60076	2	1	MOTHERBOARD ASSEMBLY	28480	08559-60076

TABLE 6-3. REPLACEABLE PARTS

Reference Designator	HP Part Number	C D	Qty	Description	Mfr. Code	Mfr. Part Number
				ACCESSORIES SUPPLIED		
	08558-60131	9	1	SIDE STOP KIT	28480	08558-60131
	1250-0780	5	1	ADAPTER, TYPE N MALE TO BNC FEMALE	28480	1250-0780
	5020-8565	7	1	CRT-OVERLAY, HP 180 SERIES DISPLAYS	28480	5020-8565
	5020-8566	8	1	CRT-OVERLAY. HP 181 SERIES DISPLAYS	28480	5020-8566
	5020-8567	9	1	CRT-OVERLAY. HP 182 SERIES DISPLAYS	28480	5020-8567
	00853-90010	8	1	ECONOMY S.A. OPERATION BOOKLET	28480	00853-90010

TABLE 6-3. REPLACEABLE PARTS

Reference Designator	HP Part Number	C D	Qty	Description	Mfr. Code	Mfr. Part Number
				MISCELLANEOUS CHASSIS PARTS		
				ELECTRICAL		
C1	0180-2144	9	1	CAP (MOUNTED ON REAR PANEL)	28480	0180-2144
C2	0180-2217	7	1	CAP (MOUNTED ON REAR PANEL)	28480	0180-2217
W1	08559-20045	1	1	CABLE ASSEMBLY, RF INPUT TO ATTENUATOR	28480	08559-20045
W2	08559-20046	2	1	CABLE ASSEMBLY, ATTEN TO FIRST MIXER	28480	08559-20046
W3	08559-20081	5	1	CABLE ASSEMBLY, YTO TO FIRST MIXER	28480	08559-20081
W4	08559-60045	3	5	CABLE ASSEMBLY, CAL OUTPUT	28480	08559-60045
W5	08557-60045	3	1	CABLE ASSEMBLY, VERT OUT	28480	08557-60045
				MECHANICAL		
	7120-4559	5	2	LABEL. WARNING (ONE INSIDE REAR PANEL AND ONE ON A16)	28480	7120-4559

Reference Designator	HP Part Number	C D	Qty	Description	Mfr. Code	Mfr. Part Number
1	08559-00030	2	1	PANEL, FRONT	28480	08559-00030
2	08559-00038	0	1	GUSSET, LEFT SIDE	28480	08559-00038
3	08559-00037	9	1	GUSSET, RIGHT SIDE	28480	08559-00037
4	08559-00003	9	1	PANEL, REAR	28480	08559-00003
5	5061-5426	9	1	RAIL. GUIDE TOP	28480	5061-5426
6	08559-20017	7	1	EXTRUSION, CIRCUIT ENCLOSURE, TAPPED	28480	08559-20017
7	08559-20015	5	1	EXTRUSION. END PLATE ENCLOSURE	28480	08559-20015
8	08559-20014	4	1	EXTRUSION, CIRCUIT ENCLOSURE, TAPPED	28480	08559-20014
9	08559-20016	6	2	EXTRUSION, CIRCUIT ENCLOSURE	28480	08559-20016
10	08559-20001	9	1	WINDOW, FREQ. DISPLAY	28480	08559-20001
11	5021-3254	3	1	RAIL, GUIDE BOTTOM	28480	5021-3254
12	08557-60045	3	1	CABLE ASSY (W5) VERTICAL OUTPUT	28480	08557-60045
13	2200-0165	6	2	SCREW. MACH 4-40.25 IN LG 82 DEG	28480	2200-0165
14	2360-0194	9	4	SCREW, MACH 6-32.312 IN LG FL-HD-POZI	28480	2360-0194
15	2360-0192	7	4	SCREW, MACH 6-32 .25 IN LG FL-HD-POZI	28480	2360-0192
16	2360-0201	9	2	SCREW. MACH 6-32 .5 IN LG PAN-HD-POZI	28480	2360-0201
17	0624-0099	1	80	SCREW. TPG 4-40.375 IN LG PAN-HD-POZI	28480	0624-0099
18	2200-0103	2	14	SCREW, MACH 4-40.25 IN LG PAN-HD-POZI	28480	2200-0103
19	2200-0170	3	1	SCREW. MACH 4-40 .625 IN LG 82 DEG	28480	2200-0170
20	0380-0005	1	1	SPACER, RND.312 IN LG .18-IN-ID	28480	0380-0005
21	2260-0003	7	1	NUT. HEX PLSTC LKG 4-40 THD .141 IN THK	28480	2260-0003
22	2200-0164	5	2	SCREW. MACH 4-40 .188 IN LG UNCT 82 DEG	28480	2200-0164
23	2200-0769	6	3	SCREW, MACH 4-40 .438 IN LG PAN-HD-POZI	28480	2200-0769
24	08559-00006	2	1	COVER. THIRD CONVERTER	28480	08559-00006
25	08559-00007	3	1	COVER. BANDWIDTH FILTER NO. 1	28480	08559-00007
26	08559-00008	4	1	COVER, STEP GAIN	28480	08559-00008
27	08559-00009	5	1	COVER, BANDWIDTH FILTER NO. 2	28480	08559-00009
28	08559-00027	7	1	COVER, LOG AMP	28480	08559-00027
29	3050-0105	6	4	WASHER. FL-MTLC NO. 4 .125 IN ID	28480	3050-0105
30	2420-0001	5	2	NUT. HEX-W/LKWR 6-32 THD .109 IN THK	28480	2420-0001
31	3050-0082	8	6	WASHER. FIBER	28480	3050-0082
32	2190-0104	0	1	WASHER. LK INTL 7/16 IN .439 IN ID	28480	2190-0104
33	2950-0132	6	1	NUT. HEX DBL-CHAM 7/16 -28 THD .125 IN THK	28480	2950-0132
34	0370-0606	7	11	BEZEL, PB ,330 IN SQ: JADE GRAY	28480	0370-0606
36	5040-8819	6	1	PUSHBUTTON, SQUARE: WILLOW GREEN	28480	5040-8819
37	08565-40011	1	1	POINTER, INPUT ATTENUATOR	28480	08565-40011
38	1460-0532	0	1	SPRING. CONICAL	28480	1460-0532
39	08558-60167	1	1	KNOB ASSY, REFERENCE LEVEL	28480	08558-60167
40	08565-00043	5	1	INDEX DISK, REFERENCE LEVEL	28480	08565-00043
41	0510-0089	8	1	RETAINER, RING EXT .188 IN DIA, BE CU	28480	0510-0089
42	08565-60047	5	1	KNOB ASSY, REF LEVEL FINE	28480	08565-60047
43	08559-20052	0	1	KNOB ASSV, RESOLUTION BW	28480	08559-20052
44	08559-20053	1	1	KNOB ASSY. FREQ SPAN/DIV	28480	08559-20053
45	0370-3060	3	1	KNOB, LOCK	28480	0370-3060
46	08559-60002	4	1	RF INPUT ASSY	28480	08559-60002
47	08559-20045	1	1	CABLE. RF INPUT	28480	08559-20045

FIGURE 6-1. MECHANICAL CHASSIS PARTS (1 OF 2)

Reference Designator	HP Part Number	C D	Qty	Description	Mfr. Code	Mfr. Part Number
48	0370-3021	6	1	KNOB ASSY, MANUAL SWEEP	28480	0370-3021
49	08559-20051	9	1	KNOB ASSY, SWEEP TIME/DIV	28480	08559-20051
50	08559-20050	8	1	KNOB ASSY, SWEEP TRIGGER	28480	08559-20050
51	0370-3006	7	1	KNOB ASSY, FINE TUNE	28480	0370-3006
52	0370-3004	5	1	KNOB ASSY, COARSE TUNE	28480	0370-3004
53	08565-60170	5	2	KNOB, BASELINE CLIP/VIDEO FILTER	28480	08565-60170
54	2190-0390	6	1	WASHER, FL NM 1/4 IN .26 IN ID .562 IN OD	28480	2190-0390
55	2950-0001	8	1	NUT, HEX DBL CHAM 3/8-32 THD .094 IN THK	28480	2950-0001
56	2190-0016	3	1	WASHER, LK INTL T 3/8 IN .377 IN ID	28480	2190-0016
57	08558-00006	1	1	INSULATOR, REAR (HELD WITH DOUBLESIDED ADHESIVE FOAM TO 7)	28480	08558-00006
58	86701-40001	9	2	EXTRACTOR, PC BOARD	28480	86701-40001
59	08559-20044	0	1	PLATE, CAUTION	28480	08559-20044
60	0510-0005	8	1	RTNR-R .250 IN ID	28480	0510-0005
61	3050-0017	9	4	WSHR-FL .260 IN ID	28480	3050-0017
62	3050-0161	4	2	WSHR-SP .265 IN ID	28480	3050-0161
63	0590-1251	6	1	NUT-SPCLY 15/32-32 THD .1 IN THK .562 WD	28480	0590-1251
64	6960-0016	0	1	PLUG-HOLE .125 IN ID	28480	6960-0016
65	0380-0034	6	1	SPACER, RND .312 IN LG .118 IN ID	28480	0380-0034
66	2200-0101	0	2	SCREW, MACH 4-40 .18 IN LG PAN-HD-POZI	28480	2200-0101
67	2200-0061	1	20	SCREW, MACH 4-40 .25 IN LG SLOT HD	28480	2200-0061
68	2510-0278	9	2	SCREW, MACH 8-32 .125 IN LG NYLON	28480	2510-0278
69	2360-0113	2	1	SCREW, MACH 6-32 .312 IN LG PAN-HD-POZI	28480	2360-0113
70	3050-0929	2	1	WASHER, FL NM 1/4 IN .26 IN ID .562 IN OD	28480	3050-0929
71	0360-0269	7	1	TERMINAL-SLDR LUG LK-MTG FOR-#8-SCR	28480	0360-0269
72	2200-0141	8	2	SCREW, MACH 4-40 .312 IN LG PAN-HD-POZI	28480	2200-0141
73	2260-0009	3	2	NUT-HEX-W/LKWR 4-40 THD .094 IN THK	28480	2260-0009
74	0360-1669	3	1	TERMINAL STRIP 3-TERM PHEN 1.13-IN-L	28480	0360-1669
75	1400-0031	8	1	CLAMP-CABLE .375-DIA .5-WD NYL	28480	1400-0031
76	2200-0145	2	1	SCREW-MACH 4-40 .438-IN-LG PAN-HD-POZI	28480	2200-0145
77	2260-0001	5	1	NUT-HEX-DBL-CHAM 4-40 THD .094-IN-THK	28480	2260-0001
78	3050-0066	8	1	WASHER-FL MTLC NO. 6 .147-IN-ID	28480	3050-0066
79	2190-0018	5	1	WAHSER-LK HLCL NO. 6 .141-IN-ID	28480	2190-0018

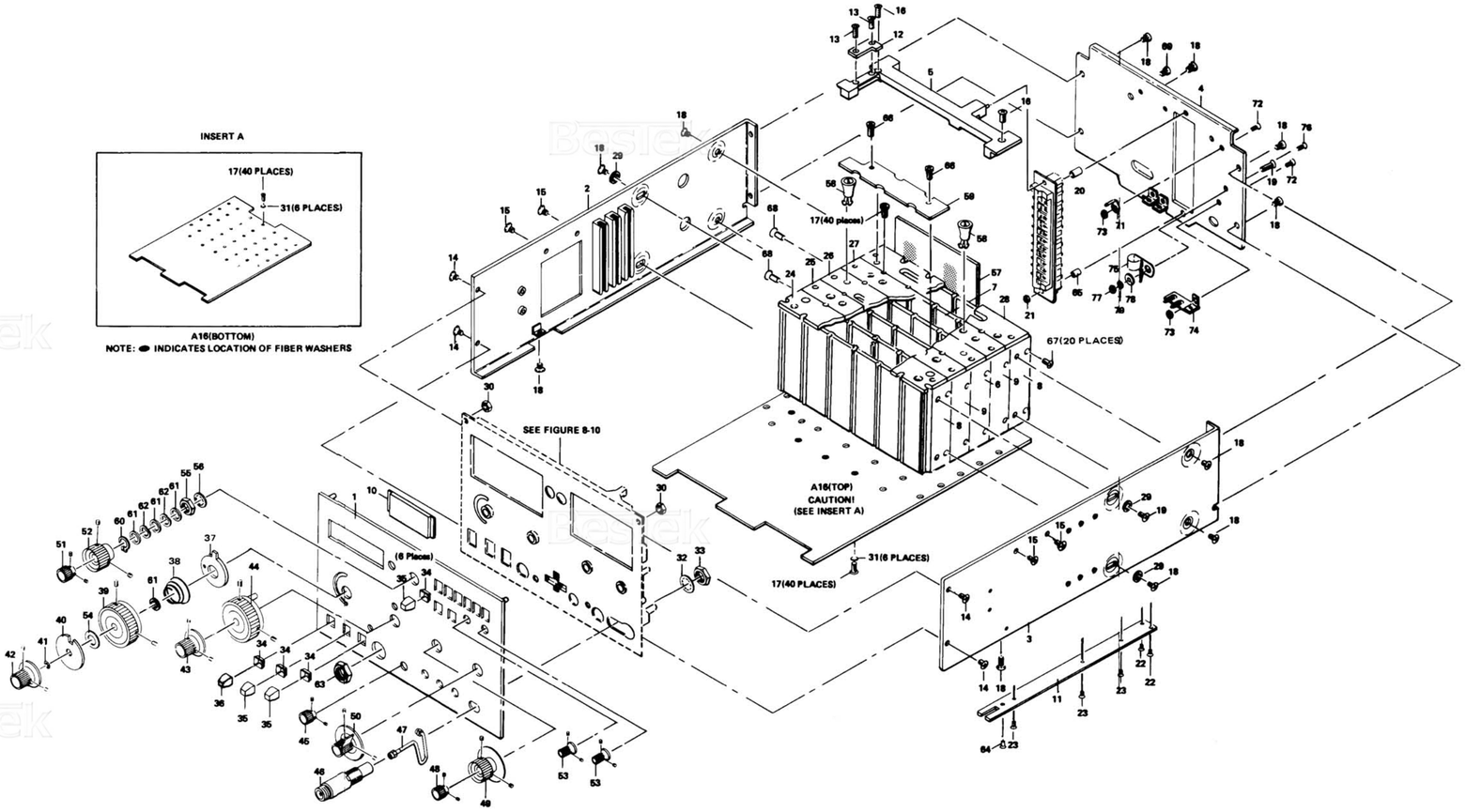

FIGURE 6-1. MECHANICAL CHASSIS PARTS (2 OF 2)

SECTION VII
MANUAL BACKDATING CHANGES

7-1. INTRODUCTION

7-2. This section contains information for adapting this manual to earlier 8559A Spectrum Analyzers. If the serial number prefix of your spectrum analyzer appears on the title page of this manual, the contents of the manual are directly applicable to your instrument. If, however, your spectrum analyzer has a lower serial number prefix than what is shown on the title page, you must adapt this manual to your instrument by changing it as indicated in this section.

7-3. If your instrument has a higher serial number prefix that what is shown on the title page of this manual, it will be documented in a yellow MANUAL UPDATING CHANGES supplement. For additional important information about serial number coverage, refer to INSTRUMENTS COVERED BY MANUAL in Section I.

7-4. HOW TO USE THIS BACKDATING INFORMATION

7-5. Change and correction information in this supplement is itemized on separate pages corresponding to the original manual pages. The pages in this supplement are organized in numerical order by manual page number. These pages are intended to be inserted into the manual to either supplement or replace the original manual pages.

7-6. To adapt this manual to your instrument:

- Insert the change pages in this section into this manual adjacent to the original manual pages.
- Insert any complete replacement pages provided into this manual in the proper location. The original manual pages may be discarded or the original manual may be left intact to document all instrument configurations.

Page 1-3:

Table 1-1. HP 8559A Specifications (1 of 4)

2236A & Below

Change "Residual **FM"** specification to read as follows:
less than 1 kHz p-p for a time interval less than or equal to .O1 **sec, 100/120** line voltages; less than 2 kHz p-p, **220/240** line voltages.

Delete the following under "Maximum Input (without damage) **Levels":**
Peak Pulse Power
+50 **dBm (100W,** 10 microsecond pulse width, 0.01% duty cycle) with input attenuation **>=30** dB.

Change **"Gain** Compression" specification to read as follows:
Gain compression is less than 0.5 dB for a **0 dBm** input level with 0 dB input attenuation.

Under **"Display** Fidelity", change the Linear specification to read as follows:
<+-0.1 division over full 8 division deflection.

Change "Humidity Range (Operating)" to read as follows:
<95% R.H. 0-degrees C to **+40-degrees** C.

Change **"EMI"** to read as follows:
Conducted and radiated interference is within the requirements of methods **CE03** and RE02 of MIL STD **461A,** VDE 0871 and CISPR Publications 1, 2, and 4.

2320A & Below

Change "Residual **FM"** specification to read as follows:
less than 1 kHz p-p in 0.1 second.

Pages 4–10 and 4–11:

Paragraph 4–13. Residual FM

2320A & Below

Change SPECIFICATION to read as follows:

Less than 1 kHz peak–to–peak for a time interval 0.1 second; 100/120 line voltages; less than 2 kHz peak–to–peak in a 180–series display mainframe with 220/240 line voltage.

Replace the note in step 6 with the following:

NOTE

A 1 kHz shift in Frequency produces a 0.7 division shift in amplitude.

In step 6, change the last sentence to read:

Peak–to–peak variation of trace should not exceed 0.7 division vertical for each horizontal division.

Page 4-63:

Table 4-18. Performance Test Record (2 of 4)

2320A & Below	Under Para. No. 4-13. Residual FM, change the maximum Peak-to-Peak Variation of Trace in test 6 to 0.7 div (1 kHz/0.1 sec).

Pages 5–11 through 5–13:

Paragraph 5–17. Power Supply Checks and Adjustments

2236A & Below	Replace Paragraph 5–17 with new Paragraph 5–17 (SERIAL PREFIX 2236A) included in this Manual Backdating supplement.

5-17. POWER SUPPLY CHECKS AND ADJUSTMENTS (SERIAL PREFIX 2236A)

REFERENCE:

A7, A8, A9 Schematics

DESCRIPTION:

The +14.5V and −10V supplies on Frequency Control Assembly A7 are adjusted. The −12.0V supply on A7 is checked for proper dc output with less than ±50 mV variation when tuning the HP 8559A from 0 to 3 GHz. The +10.0V supply on Sweep Generator/Bandwidth Control Assembly A9 is adjusted and the VO (Varactor Offset) voltage on Marker Assembly A8 is adjusted. The +10.0V supply and VO voltage must be adjusted during the first five minutes after the spectrum analyzer is turned on (cold instrument). However, the +14.5V and −10.0V supplies must be adjusted first.

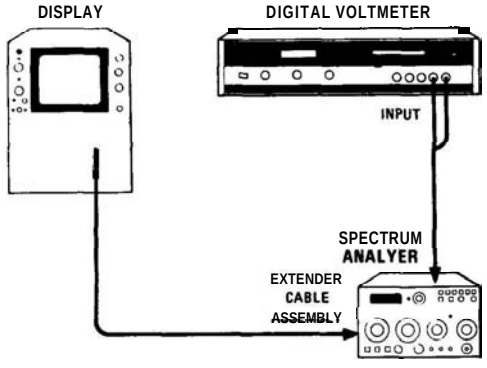

FIGURE 5-1. POWER SUPPLY CHECKS AND ADJUSTMENTS TEST SETUP

EQUIPMENT:

Digital Voltmeter ..... HP 3490A

PROCEDURE:

1. Connect equipment as shown in Figure 5-1. Install Frequency Control Assembly A7 on extender board and connect digital voltmeter to A7TP3 +14.5V.
2. Adjust A7R52 +14.5V adjustment for a voltmeter indication of +14.500 ±0.002 volts.
3. Connect digital voltmeter to A7TP2 and adjust A7R55 −10V adjustment for a voltmeter indication of −10.000 ±0.005 volts.
4. Check for −12.0 ±0.1V at collector (base) of A7Q1.
5. Select FREQUENCY BAND GHz .01 − 3 and tune from 0 to 3 while monitoring the −12V at collector of A7Q1. The −12V supply should not vary more than ±50 mV.

5-17. POWER SUPPLY CHECKS AND ADJUSTMENTS (SERIAL PREFIX **2236A) (Cont'd)**

6. Remove extender board and reinstall Frequency Control Assembly A7.

NOTE

The two following voltage adjustments, **+10V** and VO (Varactor Offset), must be adjusted while analyzer is still cold (during first five minutes after turn-on). If instrument has been operating longer than five minutes, turn off mainframe and remove assemblies A8 and **A9.** Let assemblies A8 and A9 cool on bench for 15 minutes. Replace the two assemblies and proceed with adjustment of **A9R2** and **A8R62** during the first five minutes after turn-on.

7. Connect digital voltmeter to **A9TP6 +10V** and adjust **A9R2 +10V** adjustment for a **voltmeter** indication of **+** 10.000 **± 0.100V.**

8. Connect digital voltmeter to **A8TP2** VO. Set H P **8559A** controls as follows:

FREQUENCY BAND **GHz**	**.01 – 3**
ALT IF	ON (depressed)
SIG IDENT	ON (depressed)
SWEEP TIME/DIV	**5 msec**
SWEEP TRIGGER	SINGLE

9. The voltage at **A8TP2** will change (between two values) each time a sweep is triggered. **Trigger** the sweep a few times and select the sweep that yields the least negative VO voltage. Adjust **A8R62** VO adjustment for a voltmeter indication of **–** 2.00 **± 0.10V.**

Pages 5–17 through 5-23:

Paragraph 5–19, Log Amplifier and Linear Adjustments

2208A & Below — Replace Paragraph 5–19 with new Paragraph 5–19 (SERIAL PREFIX 2208A) included in this Manual Backdating supplement.

5.19. LOG AMPLIFIER LOG AND LINEAR ADJUSTMENT (SERIAL PREFIX 2208A)

REFERENCE:

A14 and A15 Schematics

DESCRIPTION:

10 dB/DIV and LIN are adjusted for correct steps and full-screen display translations.

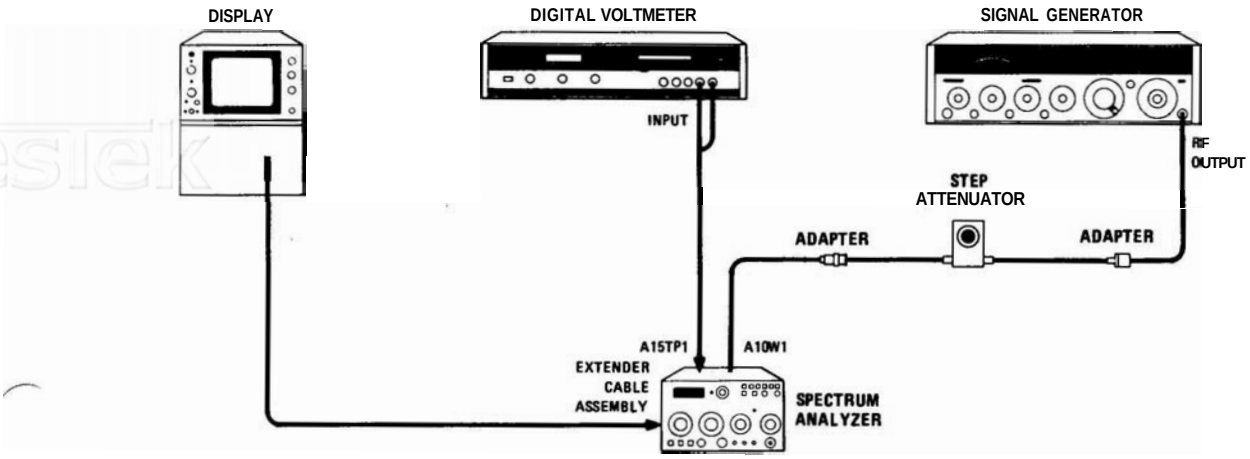

FIGURE 5-3. LOG AMPLIFIER LOG AND LINEAR ADJUSTMENT TEST SETUP

EQUIPMENT:

Signal Generator	HP 8640B
Digital Voltmeter	HP 3490A
Step Attenuator (10 dB/step)	HP 355D, Option H82
Adapter, Type N Male on one end, BNC female on other end	HP 1250-0780
Adapter, BNC Male on one end, SMA Male on other end	HP 1250-0831

PROCEDURE:

1. Set spectrum analyzer controls as follows:

FREQUENCY BAND GHz	.01 – 3
FREQ SPAN/DIV	1 MHz
RESOLUTION BW	300 kHz
INPUT ATTEN	10 dB
REF LEVEL dBm	–50
Amplitude Scale	LIN
SWEEP TIME/DIV	AUTO
SWEEP TRIGGER	FREE RUN

5-19. LOG AMPLIFIER LOG AND LINEAR ADJUSTMENT (SERIAL PREFIX 2208A) (Cont'd)

2. Connect equipment as shown in Figure 5-3. Set signal generator frequency to 321.4 MHz and output level to −40 dBm. Remove A10W1 from A5J2 2nd CONV OUT. Connect signal generator output through step attenuator and adapters to A10W1.

3. Set the TEST-NORM switch A12S1 to the TEST position. Tune signal generator frequency for maximum signal amplitude on oscilloscope display with step attenuator set at 0 dB.

4. Set output level of signal generator for a digital voltmeter reading of 700 mV, with step attenuator set at 0 dB and REF LEVEL dBm set to −50.

5. Set HP 8559A REF LEVEL dBm to −80 and set step attenuator to 30 dB. Observe digital voltmeter reading.

6. Adjust A14R3 GAIN LIN for a digital voltmeter reading of 700 mV.

7. Repeat steps 4, 5, and 6 until the DVM reading in step 5 is 700 ± 2 mV.

8. Set HP 8559A REF LEVEL dBm to −50 and set step attenuator to 0 dB. Change REF LEVEL dBm and step attenuator settings as shown in Table 5-6. If Deviation from Reference is not within the given limits, readjust A14R3.

TABLE 5-6. LINEAR GAIN ADJUSTMENT LIMITS

Reference Level (dBm)	Step Attenuator Setting (dB)	Deviation From Reference
-50	0	Reference (700 mV)
-60	10	±10 mV
-70	20	±20 mV
-80	30	±20 mV
-90	40	±30 mV

9. Set HP 8559A REF LEVEL dBm to 0 and disconnect signal generator from step attenuator. Record offset reading (DVM). The offset should be less than ±30 mV.

Offset _____ mV

10. Reconnect signal generator as shown in Figure 5-3. Set Amplitude Scale to 10 dB/DIV and set step attenuator to 40 dB.

11. Set output level of signal generator for a digital voltmeter reading of 400 mV plus offset recorded in step 9 (algebraic sum). (Example: if offset if −23 mV, set output level of signal generator for a DVM reading of 377 mV.)

5-19. LOG AMPLIFIER LOG AND LINEAR ADJUSTMENT (SERIAL PREFIX 2208A) (Cont'd)

12. Set step attenuator to 0 dB. Digital voltmeter should indicate 800 mV, plus offset (algebraic sum) ±1 mV. If DVM reading is not within limits, adjust A14R2 LOG LIN adjustment for a digital voltmeter reading of 800 mV, plus offset minus 50 percent of overshoot. (Example: if DVM indicates 767 mV and should be indicating 777 mV (–10 mV overshoot), adjust A14R2 for a DVM reading of 777 mV minus –5 mV, or 782 mV.)

13. Repeat steps 10, 11, and 12 until the digital voltmeter indicates 800 mV plus offset ±1 mV with no further adjustment of A14R2 in step 12.

14. Set the step attenuator to the positions shown in Table 5-7 and record DVM reading for each setting. Correct the DVM readings by algebraically adding the offset (recorded in step 9).

TABLE 5-7. LOG FIDELITY CHECK

Step Attenuator Setting (dB)	DVM Reading (mV)	DVM Reading Corrected for Offset		
		Min. (mV)	Actual (mV)	Max. (mV)
0	_____	799	_____	801
10	_____	697	_____	703
20	_____	596	_____	604
30	_____	496	_____	504
40	_____	395	_____	405
50	_____	294	_____	306
60	_____	193	_____	207
70	_____	92	_____	108

15. Readjust A14R2 if necessary to meet the limits in Table 5-7.

16. Set step attenuator to 0 dB and set output level of signal generator for a digital voltmeter reading of 800 mV plus offset (recorded in step 9) ±1 mV.

17. Set Amplitude Scale to LIN. The digital voltmeter should indicate the reading set in step 16 ±25 mV. If it does, go to step 19. If it does not, or if log fidelity is not within limits, go to step 18 and select A14R16*.

18. Select A14R16* to obtain an output in step 17 within ±25 mV of the reading set in step 16. Decreasing A14R16* 10 percent will increase the DVM reading approximately 30 mV in step 17.

NOTE

Log fidelity must be considered when selecting A14R16*. That is, if the DVM READING CORRECTED FOR OFFSET in Table 5-7 is greater than 100 mV for a STEP ATTENUATOR SETTING of 70 dB, A14R16* should be selected for a DVM reading greater than the reading set in step 16. If the READING CORRECTED FOR OFFSET is less than 100 mV, A14R16* should be selected for DVM reading less than the reading set in step 16.

5-19. LOG AMPLIFIER LOG AND LINEAR ADJUSTMENT (SERIAL PREFIX 2208A) (Cont'd)

19. Set output level of signal generator for a digital voltmeter reading of 800 mV plus offset (algebraic sum) ±1 mV.

20. Set Amplitude Scale to 10 dB/DIV and adjust A14R2 LOG LIN adjustment for a digital voltmeter reading of 800 mV plus offset.

21. Repeat step 14 to recheck the log fidelity.

22. Set the REF LEVEL dBm control to −50. Set Amplitude Scale to 1 dB/DIV.

23. Set the step attenuator to 0 dB and set output level of signal generator for a digital voltmeter reading of 700 mV (do not include offset).

24. Set the REF LEVEL dBm control to −90 and the step attenuator to 40 dB. Adjust A14R1 LOG GAIN adjustment for a digital voltmeter reading of 700 mV.

25. Change REFERENCE LEVEL and step attenuator settings as shown in Table 5-8. Deviation from Reference should not exceed the given limits.

TABLE 5-8. LOG GAIN ADJUSTMENT LIMITS

Reference Level (dBm)	Step Attenuator Setting (dB)	Deviation From Reference
–50	0	Reference (700 mV)
-60	10	±30 mV
–70	20	+30 mV
–80	30	+30 mV
–90	40	±30 mV

26. Return the TEST-NORM switch on assembly A12 to the NORM position.

Pages 5-26 through 5–32:

Paragraph 5-21. Bandwidth Filter Adjustments

1909A & Below	**Replace Paragraph 5–21 with new Paragraph 5–21 (SERIAL PREFIX 1909A) included in this Manual Backdating supplement.**

5-21. BANDWIDTH FILTER ADJUSTMENTS (SERIAL PREFIX 1909A)

REFERENCE:

A9, A11, and A13 Schematics

DESCRIPTION:

The crystal and LC bandwidth filter circuits are adjusted for symmetry, center, and peak. Three-dB bandwidths are adjusted in Sweep Generator/Bandwidth Control Assembly A9 (paragraph 5-22).

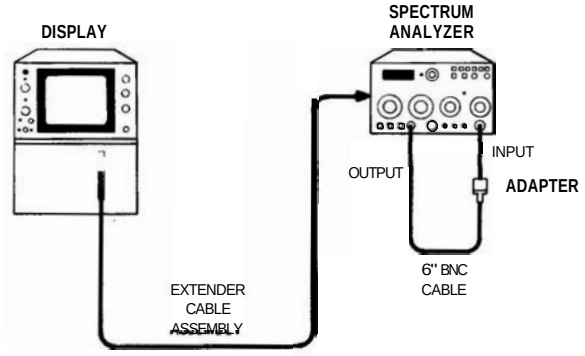

FIGURE 5-6. CRYSTAL AND LC BANDWIDTH FILTER ADJUSTMENTS TEST SETUP

EQUIPMENT:

Adapter, Type N Male to BNC Female	HP 1250-0780
BNC Cable, 6-Inch	HP 10502A
Crystal Short (3 required)	See Figure 5-6

NOTE

A crystal short consists of a .01 μF capacitor (HP Part Number 0160-0161) and a 909 ohm resistor (HP Part Number 0757-0400) connected in series. Two square terminal connectors (HP Part Number 0362-0265) are used to connect the crystal short across the test points.

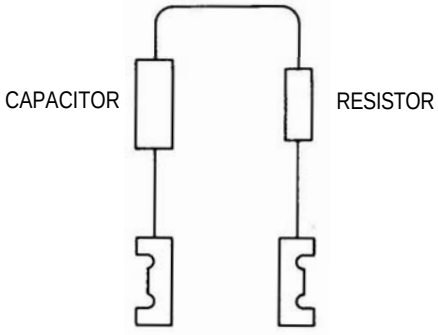

FIGURE 5-6. CRYSTAL SHORT CONFIGURATION

5-21. BANDWIDTH FILTER ADJUSTMENTS (SERIAL PREFIX **1909A)** (Cont'd)

PROCEDURE:

NOTE

Allow 30 minutes **warmup** time before performing adjustments.

1. Set spectrum analyzer controls **as** follows:

FREQUENCY BAND GHz	**.01 – 3**
TUNING	35 MHz
FREQ SPAN/DIV	**10 kHz**
RESOLUTION BW	1 kHz
INPUTATTEN	30dB
REF LEVEL dBm	**0**
Amplitude Scale	LIN
SWEEP TIME/DIV	AUTO
SWEEPTRIGGER	**FREE RUN**

Crystal Alignment

2. Connect equipment **as** shown in Figure 5-5.

NOTE

If Sweep **Generator/Bandwidth** Control Assembly A9 has been replaced or adjusted, perform steps 3 through 9. If not, proceed to step 10.

3. Set FREQ **SPAN/DIV** to **500** kHz and RESOLUTION BW to 1 MHz.

4. Center the signal with TUNING control. Using REF LEVEL FINE control, place signal at 7.1 divisions (0.9 division from top graticule line).

5. Adjust **A9R85** LC until signal is two divisions wide at the fifth graticule line (1 MHz wide at 3-dB points).

6. Set FREQ **SPAN/DIV** to 10 kHz and RESOLUTION BW to 10 kHz.

7. Using REF LEVEL FINE control, place signal at 7.1 divisions.

8. Adjust **A9R72** XTL until signal is one division wide at the fifth graticule line (10 kHz wide at 3 dB points).

9. Set FREQ **SPAN/DIV** to 10 kHz and RESOLUTION BW to 1 kHz.

10. Center signal with TUNING control. (It might be necessary to increase FREQ **SPAN/DIV** temporarily to find the signal.) Set REF LEVEL FINE control to place signal at sixth **graticule** line.

NOTE

Do not readjust REF LEVEL **FINE** control until all crystal and LC bandwidth filter adjustments have been performed.

5-21. BANDWIDTH FILTER ADJUSTMENTS (SERIAL PREFIX 1909A) (Cont'd)

11. Set FREQ SPAN/DIV to 20 kHz, RESOLUTION BW to 30 kHz, and SWEEP TIME/DIV to 10 mSEC.

NOTE

A non-metallic tuning tool is required for adjustments on Bandwidth Filter Assemblies A11 and A13.

12. Connect crystal shorts (through cover access holes) across A13TP1/TP2, A11TP1/TP2, and A11TP4/TP5.

NOTE

Keep crystal spike centered during adjustments. The SYM and CTR adjustments for each crystal are interacting.

13. Adjust front-panel TUNING control to center bandpass spike (Figure 5-7) on the CRT display.

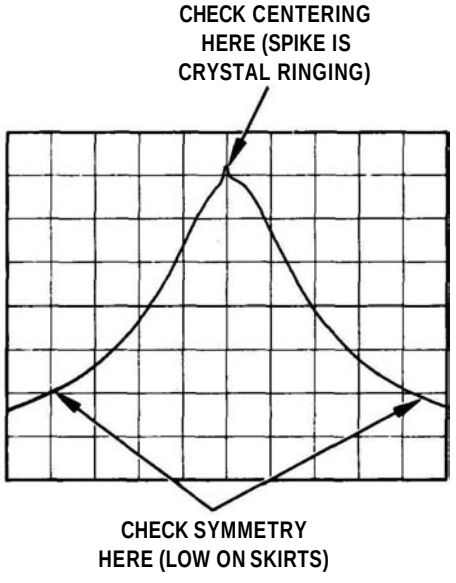

FIGURE 5-7. ADJUSTING CRYSTAL SYMMETRY AND CRYSTAL CENTERING

14. Adjust A13C38 SYM and A13C54 CTR for a centered and symmetrical bandpass as shown in Figure 5-7. Adjust A13C54 CTR for minimum signal amplitude.

15. Remove crystal short from A13TP1/TP2.

5-21. BANDWIDTH FILTER ADJUSTMENTS (SERIAL PREFIX 1909A) (Cont'd)

16. Adjust **A13C15 SYM** and **A13C25** CTR for a centered and symmetrical bandpass. Adjust **A13C25** CTR for minimum signal amplitude,

17. Remove crystal short from **A11TP4/TP5.**

18. Adjust **A11C38 SYM** and **A11C54** CTR for a centered and symmetrical bandpass. Adjust **A11C54** for minimum signal amplitude.

19. Remove crystal short from **A11TP1/TP2.**

20. Adjust **A11C15 SYM** and **A11C25** CTR for a centered and symmetrical bandpass. Adjust **A11C25** for minimum signal amplitude.

21. Remove the crystal shorts.

LC Alignment

22. Perform preliminary LC filter adjustments as follows:

NOTE

When Bandwidth Filter Assemblies A11 and A13 are installed with covers in place, midget copper alligator clips (HP Part Number 1400-0483) can be used to short test points to the cover.

a. Install **A13** on extender board.

b. Short to ground the following test points: **A13TP6, A11TP3,** and **A11TP6.** Jumper **A9TP1** to **A9TP2.**

c. Adjust **A13C73** for minimum signal amplitude.

d. Disconnect short from A13**TP6** and short to ground A13**TP3.**

e. Adjust **A13C74** for minimum signal amplitude.

f. Reinstall A13 and install **A11** on extender board.

g. Disconnect short from **A13TP3** and short to ground A11**TP6.**

h. Adjust A11**C73** for minimum signal amplitude.

i. Disconnect short from A11**TP6** and short to ground **A11TP3.**

j. Adjust A11**C74** for minimum signal amplitude.

k. Disconnect shorts from test points and reinstall **A1**1. Replace covers on **A11** and A13 assemblies. Remove jumper from **A9TP**1/**A9TP2.**

5-21. BANDWIDTH FILTER ADJUSTMENTS (SERIAL PREFIX 1909A) (Cont'd)

23. Carefully center signal on CRT in 30 **kHz** RESOLUTION **BW;** then switch RESOLUTION BW to 100 **kHz.** Note where signal intersects the center vertical graticule line.

24. Adjust **A13C45** LC CTR for maximum signal amplitude where the signal intersects the center vertical graticule line.

25. Switch RESOLUTION BW to 30 **kHz** and center signal; then switch to 100 **kHz.** Note where signal intersects the center vertical graticule line.

26. Adjust **A13C23** LC CTR for maximum signal amplitude where the signal intersects the center vertical graticule line.

27. Switch RESOLUTION BW to 30 **kHz** and center signal; then switch to 100 **kHz.** Note where signal intersects the center vertical graticule line.

28. Adjust **A11C45** LC CTR for maximum signal where the signal intersects the center vertical graticule line.

29. Switch RESOLUTION BW to 30 **kHz** and center signal; then switch to 100 **kHz.** Note where signal intersects the center vertical graticule line.

30. Adjust **A11C23** LC CTR for maximum signal amplitude where the signal intersects the center vertical graticule line.

31. Switch RESOLUTION BW between 100 **kHz** and 30 **kHz** to be sure the signal is centered at both bandwidth settings.

Bandwidth Amplitude

32. Set Amplitude Scale to 1 **dB/DIV** and SWEEP **TIME/DIV** to AUTO.

33. *Set* RESOLUTION BW to 3 **MHz** and FREQ **SPAN/DIV** to 50 **kHz.**

34. Adjust fine TUNING and REF LEVEL FINE for a centered signal at 7 divisions.

35. *Set* RESOLUTION BW to 100 **kHz** and center signal with fine TUNING control. Adjust **A13R26** LC and A11**R26** LC equally to obtain a signal amplitude of 7 divisions.

36. Set RESOLUTION BW to 1 **kHz** and FREQ **SPAN/DIV** to 10 **kHz.** Center signal with fine TUNING control. Adjust A11**R31** XTL and **A13R31** XTL equally for a signal amplitude of 7 divisions.

NOTE

Each potentiometer should be adjusted to accomplish half the necessary increase in signal amplitude.

5-21. BANDWIDTH FILTER ADJUSTMENTS (SERIAL PREFIX 1909A) (Cont'd)

37. Set FREQ SPAN/DIV to 10 kHz and RESOLUTION BW to 1 kHz with arrows aligned (OPTIMUM). Push in to couple the two controls.

38. Adjust REF LEVEL FINE for a signal amplitude of 7 divisions.

39. With controls coupled, step RESOLUTION BW from 1 kHz to 3 MHz. Variation in signal amplitude should be less than ±0.4 dB.

40. If variation in signal amplitude is not within limits, repeat steps 32 through 39.

Pages 5–33 through 5–37:

Paragraph 5-22. 3 dB Bandwidth Adjustment

1909A & Below	Replace Paragraph 5–22 with new Paragraph 5–22 (SERIAL PREFIX 1909A) included in this Manual Backdating supplement.

5-22. 3 dB BANDWIDTH ADJUSTMENTS(SERIAL PREFIX 1909A)

REFERENCE:

A9 Schematic

DESCRIPTION:

The 3-dB bandwidths for the 3 MHz, 1 MHz and 300 kHz RESOLUTION BW settings are adjusted using the CAL OUTPUT as the signal source. The 3-dB bandwidths for the 10 kHz, 3 kHz, and 1 kHz RESOLUTION BW settings are adjusted by injecting a stable 321.4 MHz signal into the third converter of the spectrum analyzer.

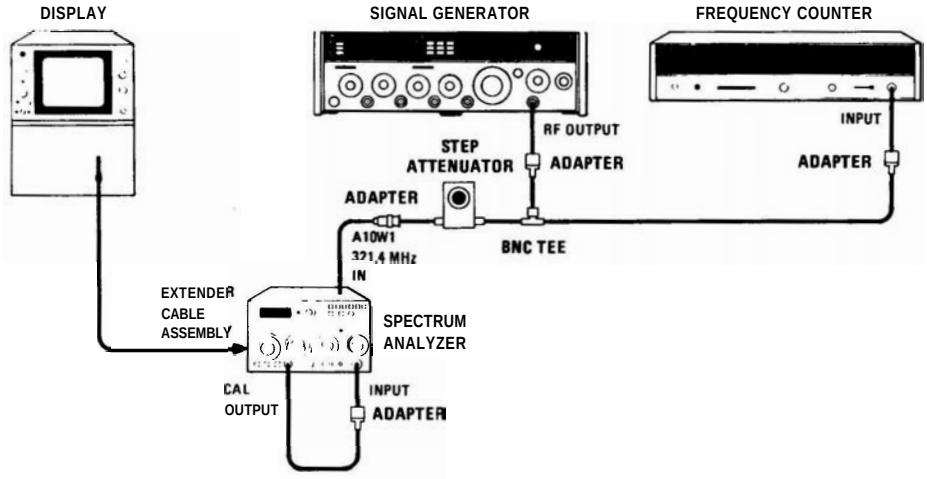

FIGURE 5-8. 3-dB BANDWIDTH ADJUSTMENT TEST SETUP

PROCEDURE:

1. Set spectrum analyzer controls as follows:

FREQUENCY BAND GHz	.01 – 3
TUNING	35 MHz
FREQ SPAN/DIV	200 kHz
RESOLUTION BW	1 MHz
INPUT ATTEN	20dB
REF LEVEL dBm	0
Amplitude Scale	LIN
SWEEP TIME/DIV	1 msec
SWEEP TRIGGER	FREE RUN
VIDEO FILTER	MIN

2. Connect equipment as shown in Figure 5-8 except for signal input to A10W1. Connect CAL OUTPUT to spectrum analyzer INPUT 50Ω.

5-22. 3 dB BANDWIDTH ADJUSTMENTS (SERIAL PREFIX 1909A) (Cont'd)

3. Set signal level of 7.1 divisions on display with REF LEVEL FINE control. (Signal should be 0.9 division from top graticule line.)

4. Set RESOLUTION BW to 1 MHz and FREQ SPAN/DIV to 200 kHz. Adjust A9R85 LC to set bandwidth of 5 divisions at the fifth graticule line.

5. Set RESOLUTION BW to 3 MHz and FREQ SPAN/DIV to 500 kHz. The bandwidth at the fifth graticule line should be between 5.4 and 6.6 divisions.

NOTE

A9R85 LC may be further adjusted to bring the 3 MHz and 300 kHz bandwidths within limits; however, the final measurement of the 1 MHz bandwidth must be between 4.5 and 5.5 divisions at the fifth graticule line. (If the 3 MHz bandwidth cannot be brought within limits by adjustment of A9R85 LC, change the value of factory-selected resistor A9R95*.)

6. Set RESOLUTION BW to 300 kHz and FREQ SPAN/DIV to 50 kHz. The bandwidth should be between 5.4 and 6.6 divisions at the fifth graticule line. (If the bandwidth cannot be adjusted within the specified limits, change the value of factory-selected resistor A9R89*.)

7. Set RESOLUTION BW to 100 kHz and FREQ SPAN/DIV to 20 kHz. The bandwidth should be between 4.3 and 5.7 divisions at the fifth graticule line.

NOTE

If the 100 kHz bandwidth is not within the specified limits, change the values of factory-selected resistors A13R19*, A13R43*, and A11R43*. If the bandwidth is too wide, increase the value of the resistors; if the bandwidth is too narrow, decrease the value of the resistors. The three factory-selected resistors need not be of equal value, but each must be within one standard value of the others.

8. Set RESOLUTION BW to 30 kHz and FREQ SPAN/DIV to 10 kHz. The bandwidth should be between 2.6 and 3.4 divisions at the fifth graticule line.

NOTE

If the 30 kHz bandwidth is not within the specified limits, change the values of factory-selected resistors A11R23*, A11R48*, A13R23*, and A13R48*. If the bandwidth is too wide, decrease the value of the factory-selected resistors; if the bandwidth is too narrow, increase the value of the resistors. The four factory-selected resistors need not be of equal value, but each must be within one standard value of the others.

9. Connect signal generator through the BNC Tee connector to the step attenuator and to the frequency counter as shown in Figure 5-8. Set the signal generator to approximately 0 dBm and the step attenuator to 30 dB.

5-22. 3 dB BANDWIDTH ADJUSTMENTS (SERIAL PREFIX 1909A) (Cont'd)

10. Remove A10W1 from A5J2 2nd CONV OUT Connect step attenuator through adapter to A10W1.

11. Set HP 8559A RESOLUTION BW to 1 MHz. Adjust the output level of signal generator to place the signal near center graticule line. Tune signal generator frequency to peak signal on oscilloscope display (near 321.4 MHz).

12. Set RESOLUTION BW to 3 kHz. Tune signal generator to peak signal on oscilloscope display.

13. Adjust output level of signal generator to place signal at 7.1 divisions.

14. Note the counter frequency and tune the signal generator 1500 Hz below the center frequency noted. Record the new counter frequency.

_____ MHz

15. Adjust A9R72 XTL to bring signal level to the fifth graticule line (three divisions from the top graticule line).

16. Increase signal generator frequency until signal on oscilloscope display peaks and then decreases to the fifth graticule line. Record counter frequency.

_____ MHz

17. Compare new frequency with frequency recorded in step 14. The difference between the two frequencies should be 2800 to 3200 Hz. If the bandwidth is not within limits, repeat steps 12 through 17, slightly readjusting A9R72 XTL, until the specified limits are achieved.

18. Set RESOLUTION BW to 10 kHz. Tune signal generator to peak signal on oscilloscope display.

19. Adjust REF LEVEL FINE to place signal at 7.1 divisions.

20. Decrease the signal generator frequency until the signal on the oscilloscope display drops to the fifth graticule line. Record counter frequency.

_____ MHz

21. Increase the signal generator frequency until the signal on the oscilloscope display peaks and then decreases to the fifth graticule line. Record counter frequency.

_____ MHz

5-22. 3 dB BANDWIDTH ADJUSTMENTS (SERIAL PREFIX **1909A**) (Cont'd)

22. Compare new frequency with frequency recorded in step **20.** The difference between the two frequencies should be 9.000 **kHz** to **11.000 kHz.**

NOTE

A9R72 XTL may be further adjusted to bring the 10 kHz and 1 kHz bandwidths within limits; however, the final measurement of the 3 kHz bandwidth must be between 2700 Hz and 3300 Hz. (If the 10 kHz bandwidth cannot be brought within limits by adjustment of **A9R72** XTL, change the value of factory-selected resistor **A9R78*.)**

23. Set RESOLUTION BW to 1 **kHz. Tune** signal generator to peak signal on oscilloscope display.

24. Adjust REF LEVEL FINE to place signal at **7.1** divisions. Record counter frequency.

_____ **MHz**

25. Increase signal generator frequency until signal on oscilloscope display drops to the fifth graticule line. Record new counter frequency.

_____ **MHz**

26. The difference between the two frequencies recorded in steps 24 and **25** should be **450 Hz** to **550 Hz.**

27. Reconnect **A10W1** to **A5J2.**

Pages 5-44 through 5-48:

Paragraph 5-25. First Converter Adjustments

2236A & Below	Replace Paragraph 5–25 with new Paragraph 5–25 (SERIAL PREFIX 2236A) included in this Manual Backdating supplement.
2004A & Below	Delete steps 28 through 37.

5-25. FIRST CONVERTER ADJUSTMENTS (SERIAL PREFIX 2236A)

REFERENCE:

A3, A4, A5, A6, and A7 Schematics

DESCRIPTION:

The First LO (A6 YTO) is adjusted by monitoring the YTO output at the RF input connector (LO feedthrough) and the tuning voltage (TUNE) output of the A7 Frequency Control board and adjusting the YTO low-end frequency for 3 GHz at 0V tuning voltage and 6 GHz at −10V tuning voltage.

The FM Driver is adjusted by inputting comb signals to the analyzer and adjusting for proper spacing (span linearity) of displayed signals on the CRT display.

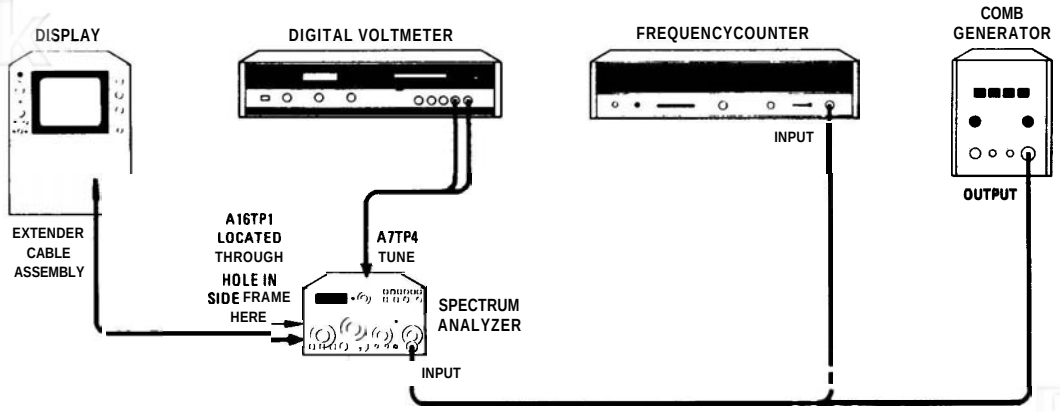

FIGURE 5-11. FIRST CONVERTER ADJUSTMENTS TEST SETUP

EQUIPMENT:

Frequency Counter	HP 5340A
Digital Voltmeter (DVM)	HP 3490A
Comb Generator	HP 8406A

PROCEDURE:

1. Allow one-half hour warmup time of equipment with analyzer connected to mainframe with extender cable.

First LO Adjustments

2. Connect DVM to A7TP4 TUNE.

3. Set analyzer controls as follows:

INPUT ATTEN	0 dB
FREQ SPAN/DIV	0 (zero)
ALTIF	OFF (out)

5-25. FIRST CONVERTER ADJUSTMENTS (SERIAL PREFIX 2236A) (Cont'd)

4. Connect frequency counter to analyzer RF Input.
5. Jumper A16TP1 DIODE BIAS to Ground. A16TP1 is located on the Motherboard through a hole in the analyzer side frame.
6. Adjust front-panel TUNING control for DVM indication of 0.000 Vdc (fully counterclockwise).
7. Adjust A7R74 3 GHz for frequency counter indication of 3.000 GHz ± 1 MHz. If this adjustment cannot be achieved, selectable resistor A7R94* can be changed to provide the proper range necessary.
8. Adjust front-panel TUNING control for – 10.000 Vdc.
9. Set A7R95 6 GHz F (fine) to approximately midrange (R95 is a 20-turn potentiometer).
10. Adjust A8R28 6 GHz C (coarse) for a frequency counter indication of 6.000 GHz ± 2 MHz.
11. Retune front-panel TUNING control for 0.000 Vdc DVM indication and readjust A7R74 3 GHz if necessary for frequency counter indication of 3.000 GHz ± 1 MHz.
12. Tune front-panel TUNING control for – 10.000 Vdc DVM indication.
13. Lightly tap the top edge of the A7 Frequency Control board with the handle of a small screwdriver to seat controls.
14. Adjust A7R95 6 GHz F (fine) for frequency counter indication of 6.000 GHz ± 1 MHz.

Alternate IF First LO Shift Check

15. Press front-panel ALT IF pushbutton IN to activate alternate IE
16. Verify YTO frequency shift according to the following table.

TABLE 5-10. FIRST LO SHIFT CHECK

FREQUENCY BAND GHz	ALT IF	FREQUENCY COUNTER INDICATION
1 (.01–3)	OFF	Reference (6.000 GHz)
1 (.01–3)	ON	Reference –15 MHz ±800 kHz
2(6–9)	ON	Reference +15 MHz ±800 kHz
3(3–9)	ON	Reference –7.5 MHz ±400 kHz
4 (9–15)	ON	Reference +7.5 MHz ±400 kHz
5 (6–15)	ON	Reference –5 MHz ±300 kHz
6(12.1–21)	ON	Reference +5 MHz ±300 kHz

17. Remove jumper from A16TP1 DIODE BIAS to Ground.

5-25. FIRST CONVERTER ADJUSTMENTS (SERIAL PREFIX 2236A) (Cont'd)

FM Driver Adjustment

18. Disconnect frequency counter from analyzer RF Input and connect comb generator to RF Input,

19. *Set* comb generator for 1 MHz comb teeth.

20. *Set* analyzer controls as follows:

FREQ **SPAN/DIV**	1 MHz
RES BW	30 kHz
TIME/DIV	AUTO
FREQUENCY **BAND GHz**	Band 1 **(.01 – 3)**
REF LEVEL **dBm**	– 20
INPUT **ATTEN**	**0** dB
ALTIF	**OFF (out)**
SIG IDENT	OFF (out)
Amplitude Scale	10 **dB/DIV**

21. **Tune** front-panel TUNING control for approximately 1500 MHz indication on front-panel FREQUENCY display.

22. Adjust front-panel TUNING FINE control to place a comb tooth on the first graticule line on the main-frame CRT display.

23. Adjust **A7R38** FM to place a comb tooth on the ninth graticule line.

24. Readjust TUNING FINE control to place a comb tooth on the first graticule line and adjust **A7R38** FM to place a comb tooth on each of the graticule lines while keeping the first comb tooth aligned using the TUNING FINE control.

25. **Tune** to **approximately** 100 MHz and verify that when a comb tooth is placed on the first graticule line using the TUNING FINE control that the ninth comb tooth is aligned with the ninth graticule line ±1 minor division.

26. Repeat step 25 for frequency of approximately 2500 MHz.

27. If necessary, **A7R38** FM may be compromise adjusted for best span linearity at the three frequencies indicated.

28. Set comb generator for 100-MHz comb teeth.

29. Adjust front-panel TUNING control for 100 MHz indication on FREQUENCY display

30. Set FREQ **SPAN/DIV** to 2 MHz.

31. Adjust TUNING to place 100-MHz comb tooth on center graticule line.

5-25. FIRST CONVERTER ADJUSTMENTS (SERIAL PREFIX 2236A) (Cont'd)

32. Set FREQ SPAN/DIV to 1 MHz. Note position of comb tooth.

33. Adjust A7R99 MO to place comb tooth midway between position noted in step 32 and center graticule line.

34. Set FREQ SPAN/DIV to 2 MHz.

35. Adjust TUNING to place comb tooth on center graticule line.

36. Set FREQ SPAN/DIV to 1 MHz. Note displacement of comb tooth from center graticule line.

37. Repeat steps 30 through 36 until displacement of comb tooth is less than 0.2 major division when FREQ SPAN/DIV is switched from 2 MHz to 1 MHz.

Page 6-7:

Table 6-3. Replaceable Parts

2236A & Below	Change W3 to HP Part Number 1250-1159, Check Digit 4, CABLE ASSEMBLY, YIO TO FIRST MIXER.
1951A, 1945A & Below	Change W4 to HP Part Number 08559-60001, Check Digit 3, CABLE ASSEMBLY, CAL OUTPUT.

Page 6-8:

Figure 6-1. Mechanical Chassis Parts

2236A & Below	Change item (2), GUSSET, LEFT, to HP Part Number 08559-60032, Check Digit 4. Change item (3), GUSSET, RIGHT, to HP Part Number 08559-60031, Check Digit 3.
2208A & Below	Change item (1), PANEL, FRONT, to HP Part Number 08559-00001, Check Digit 7. Change item (2), GUSSET, LEFT, to HP Part Number 08559-00005, Check Digit 1. Change item (3), GUSSET, RIGHT, to HP Part Number 08559-00004, Check Digit 0. Change item (11), GUIDE RAIL, BOTTOM, to HP Part Number 08559-20013, Check Digit 3.
2019A00441 & Below	Change HP Part Number 08559-00028 to HP Part Number 08558-00081, Check Digit 2, ATTENUATOR BRACKET. Add HP Part Number 08559-00023, Check Digit 3, BRACKET, ATTENUATOR DR SUPPORT.

Pages 8-17 through 8-23/8-24: DIGITAL PANEL **METER ASSEMBLY A1**

Table 8-1. Digital Panel **Meter Assembly A1,** Replaceable Parts

2218A & Below — Replace Table 8-1 with new Table 8-1 (SERIAL PREFIX **2218A)** included in this Manual Backdating supplement.

2208A & Below — Change **A1A1** to HP Part Number 08559-60032, Check Digit **0.**
Add **A1A1MP1,** HP Part Number 0380-1047, Check Digit 3, SPACER-RVT-ON **.25-IN-LG .15-IN-ID.**

1945A00241,249, 258,262,265,277 ; **1951A00283,286,** 288-290,292, **295-300; 2003A** & Below — Change **A1A2C4** and **A1A2C5** to HP Part Number 0160-3914, Check Digit 1, CAPACITOR-FXD **.01UF +-10% 100VDC** CER.
Change **A1A2L1** to HP Part Number 08559-80002, Check Digit 6, COIL, 110 UH.

Figure 8-5. Digital Panel Meter Assembly Al, Component Locations

2218A & Below — Replace Figure 8-5 with new Figure **8-5** (SERIAL PREFIX **2218A)** included in this Manual Backdating supplement.

Figure 8-6. Digital Panel **Meter Assembly A1,** Schematic **Diagram**

2218A & Below — Replace Figure 8-6 with new Figure 8-6 (SERIAL PREFIX **2218A)** included in this Manual Backdating supplement.

1945A00241,249, 258,262,265,277; 1951**A00283,286, 288-290,292, 295-300; 2003A** & Below — Make the following changes in function block **(C):**
Change C4 and C5 to **.01UF.**
Change **L1** to 110 UH.

TABLE 8-1. DIGITAL PANEL METER ASSEMBLY **A1,** REPLACEABLE PARTS (SERIAL PREFIX 2218A)

Reference Designation	HP Part Number	CD	Qty	Description	Mfr Code	Mfr Part Number
A1				FREQUENCY DISPLAY ASSEMBLY		
A1A1	08559-60072	8	1	DPM DISPLAY	28480	08559-60072
A1A1DS1	1990-0693	7	5	DISPLAY NUM SCG 1-CHAR .3 H	28480	1DS1-3533
A1A1DS2	1990-0693	7		DISPLAY NUM SEG 1 CHAR .3 H	28480	1DS1-3533
A1A1DS3	1990-0693	7		DISPLAY-NUH-SEG 1-CHAR .3 H	28480	1DS1-3533
A1A1DS4	1990-0693	7		DISPLAY-NUM-SEG 1 CHAR .3 H	28480	1DS1-3533
A1A1DS5	1990-0693	7		DISPLAY-NUM-SEG 1-CHAR .3 H	28480	1DS1-3533
A1A1XDS1	1200-0834	5	5	SOCKET-IC 10-CONT DIP DIP SLDR	28480	1200-0834
A1A1XDS2	1200-0834	5		SOCKET-IC 10-CONT DIP DIP SLDR	28480	1200-0834
A1A1XDS3	1200-0834	5		SOCKET-IC 10 CONT DIP DIP SLDR	28480	1200-0834
A1A1XDS4	1200-0834	5		SOCKET-IC 10-CONT DIP DIP SLDR	28480	1200-0834
A1A1XDS5	1200-0834	5		SOCKET IC 10 CONT DIP DIP SLDR	28480	1200-0834
A1A2	08559-60033	1	1	DPM DRIVER	211480	08559-60033
A1A2C1	0160-2220	0	1	CAPACITOR FXD 1200PF +-5% 300VDC MICA	28480	0160-2220
A1A2C2	0160-3402	2	1	CAPACITOR-FXD 1UF +-5% 50VDC HCT-POLYC	28480	0160-3402
A1A2C3	0140-0200	0	1	CAPACITOR FXD 390PF + 5% 300VDC MICA	72136	DM15F391J0300WV1CR
A1A2C4	0160-3751	4	2	CAPACITOR-FXD 2200PF +-5% 50VDC CER	28480	0160-3751
A1A2C5	0160-3751	4		CAPACITOR FXD 2200PF + 5% 50VDC CER	28480	0160-3751
A1A2C6	0160-3661	5	1	CAPACITOR-FXD .1UF +-5% 50VDC MET POLYC	28480	0160-3661
A1A2C7	0180-0197	8	1	CAPACITOR-FXD 2.2UF+-10% TOVDC TA	56289	150D225X9020A2
A1A2C8	0180-1746	5	2	CAPACITOR-FXD 15UF+-10% 20VDC TA	56289	150D156X9020B2
A1A2C9	0180-2208	6	1	CAPACITOR FXD 220UF+-10% 10VDC TA	56289	150D227X9010S2
A1A2C10	0180-1746	5		CAPACITOR-FXD 15UF+-10% 20VDC TA	56289	150D156X9020B2
A1A2C11	0160-3879	7	2	CAPACITOR-FXD .01UF +-20% 100VDC CER	28480	0160-3879
A1A2C12	0160-0127	2	1	CAPACITOR-FXD 1UF +-20% 25VDC CER	28480	0160-0127
A1A2C13	0160-3879	7		CAPACITOR-FXD .01UF +-20% 100VDC CEX	28480	0160-3879
A1A2CR1	1901-0050	3	1	DIODF SWITCHING 80V 200MA TNR DO-35	28480	1901-0050
A1A2J1	1251-4797	4	1	CONNECTOR 10 PIN M POST TYPE	28480	1251-4797
A1A2L1	08559-80010	6	1	COIL, 540UH	28480	08559-80010
A1A2L2	9140-0129	1	1	INDUCTOR RF-CH MLD 220UH 5% .166DX.385LG	28480	9140-0129
A1A2L3	9100-1641	0	1	INDUCTOR RF-CH MLD 240UH 5% .166DX.385LG	28480	9100-1641
A1A2Q1	1854-0404	0	1	TRANSISTOR NPN SI TO-18 PD=360MW	28480	1854-0404
A1A2Q2	1853-0281	9	1	TRANSISTOR PNP 2N2907A SI TO 18 PD=400MW	04713	2N2907A
A1A2Q3	1855-0420	2	1	TRANSISTOR J FET 2N4391 N CHAN D-MODE	01295	2N4391
A1A2Q4	1854-0071	7	1	TRANSISTOR NPN SI PD=300MW FT=200MHZ	28480	1854-0071
A1A2R1	0811-0696	1	1	RESISTOR 91K 1% .125W PWW TC=0+ 5	28480	0811-0696
A1A2R2	0811-0640	5	3	RESISTOR 100K .01% .125W PUU TC=0+-10	28480	0811-0640
A1A2R3	0757-0460	1	1	RESISTOR 61.9K 1% .125W F TC=0+-100	74546	C4-1/8-T0-6192-F
A1A2R4	0698-3162	0	1	RESISTOR 46.4K 1% .125W F TC=0+-100	24546	C4 1/8-T0-4642-F
A1A2R5	0698-3155	1	1	RESISTOR 4.64K 1% .125W F TC=0+-100	74546	C4 1/8-T0-4641 F
A1A2R6	2100-1738	9	1	RESISTOR-TRMR 10K 10% C TOP-ADJ 1-TRN	73138	82PR10K
A1A2R7	2100-2655	1	1	RESISTOR-TRMR 100K 10% C TOP-ADJ 1 TRN	73138	82PR100K
A1A2R8	0757-0442	9	2	RESISTOR 10K 1% .125W F TC=0+-100	24546	C4-1/8-T0-1002-F
A1A2R9	0757-0442	9		RESISTOR 10K 1% .125W F TC=0+ 100	24546	C4-1/8-T0-1002-F
A1A2R10	0757-0274	5	1	RESISTOR 1.21K 1% .125W F TC=0+-100	24546	C4-1/8-T0-1211-F
A1A2R11	0757-0280	3	1	RESISTOR 1K 1% .125W F TC=0+-100	24546	C4-1/8-T0-1001-F
A1A2R12	0757-0438	3	2	RESISTOR 5.11K 1% .125W F TC=0+-100	74546	C4-1/8-T0-5111-F
A1A2R13	0698-3136	8	1	RESISTOR 17.8K 1% .125W F TC=0+-100	24546	C4-1/8-T0-1782-F
A1A2R14	0757-0416	7	1	RESISTOR 511 1% .125W F TC=0+-100	24546	C4-1/8-T0-511R-F
A1A2R15	0698-3442	9	1	RESISTOR 237 1% .125W F TC=0+-100	24546	C4-1/8-T0-237R-F
A1A2R16	0757-0438	3		RESISTOR 5.11K 1% .125W F TC=0+-100	24546	C4-1/8-T0-5111-F
A1A2R17	0698-3438	3	2	RESISTOR 147 1% .125W F TC=0+-100	24546	C4-1/8-T0-147R-F
A1A2R18	0757-0279	0	1	RESISTOR 3.16K 1% .125W F TC=0+-100	24546	C4-1/8-T0-3161-F
A1A2R19	0698-0085	0	1	RESKSTOR 2.61K 1% .125W F TC=0+-100	24546	C4-1/8-T0-2611-F
A1A2R20	0698-3438	3		RESISTOR 147 1% .125W F TC=0+-100	24546	C4-1/8-T0-147R-F
A1A2R21	0811-0640	5		RESKSTOR 100K .01% .125W PWU TC=0+-10	28480	0811-0640
A1A2R22	0811-0640	5		RESISTOR 100K .01% .125W PUU TC=0+-10	28480	0811-0640
A1A2TP1	1251-0600	0	1	CONNECTOR-SCL CONT PIN 1.14-MM-BSC-SZ SQ	28480	1251-0600
A1A2U1	1826-1058	3	1	IC OP AMP CP 8-TO-99 PKG	28480	1826-1058
A1A2U2	1826-0588	2	1	IC CONV 16-DIP-P PKG	17856	LD120CJ
A1A2U3	1826-0587	1	1	IC CONV 18-DIP-P PKG	17856	LD121CJ
A1A2U4	1820-1903	5	1	IC DRVR TTL DSPL DRVR	07263	9368PC
A1A2U5	1810-0347	8	2	NETUORK-RES 8-SIP2.2K OHM X 4	01121	208R222
A1A2U6	1810-0347	8		NETWORK-RES 8-SIP2.2K OHM X 4	01121	208R222
A1A2VR1	1902-0625	0	1	DIODE-ZNR 1N829 6.2V 5% DO-7 PD=.25W	04713	1N829
A1A2VR2	1902-3149	9	1	DIODE-ZNR 9.09V 5% DO-35 PD=.4W	28480	1902-3149
A1A2VR3	1902-3024	9	1	DIODE-ZNR 2.87V 5%DO-7 PD=.4W TC=-.07%	28480	1902-3024
A1A2VR4	1902-1286	1	1	DIODE-ZNR 1N5342B 6.8V 5% PD=5W TC=+200%	04713	1N5342B
A1A2XA1	1251-3403	7	1	CONNECTOR-PC EDGE 10-CONT/ROW 2-ROWS	28480	1251-3403

See introduction to this section for ordering information
*Indicates factory selected value

A1A2
DPM DRIVER

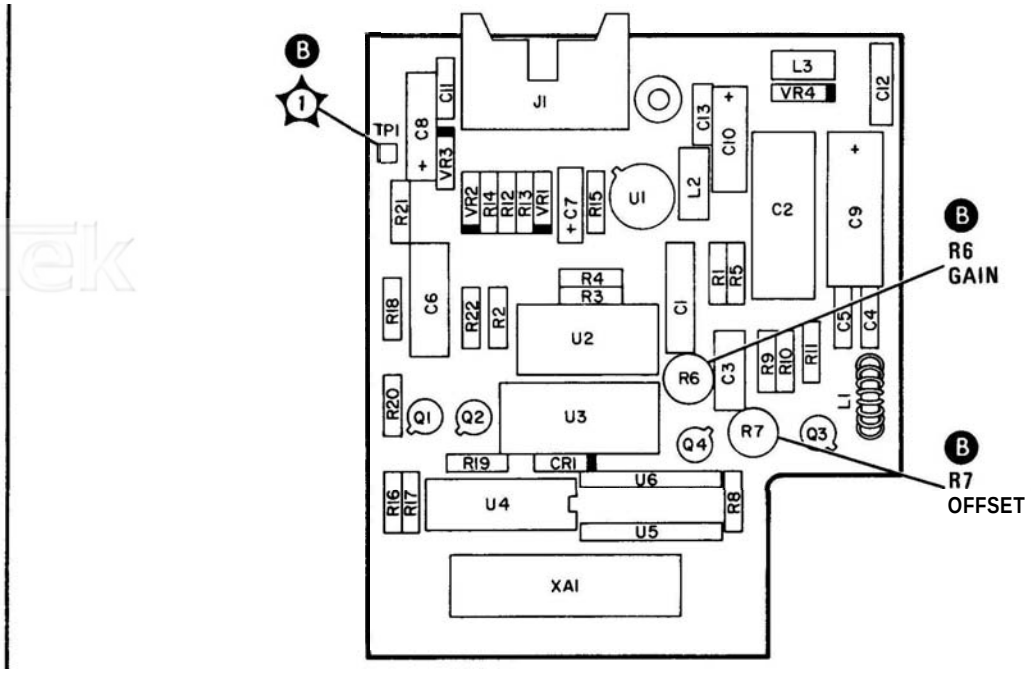

A1A1
DPM DISPLAY

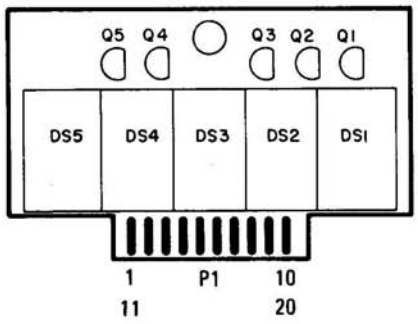

FIGURE 85. DIGITAL PANEL METER ASSEMBLY A1, COMPONENT LOCATIONS (SERIAL PREFIX 2218A)

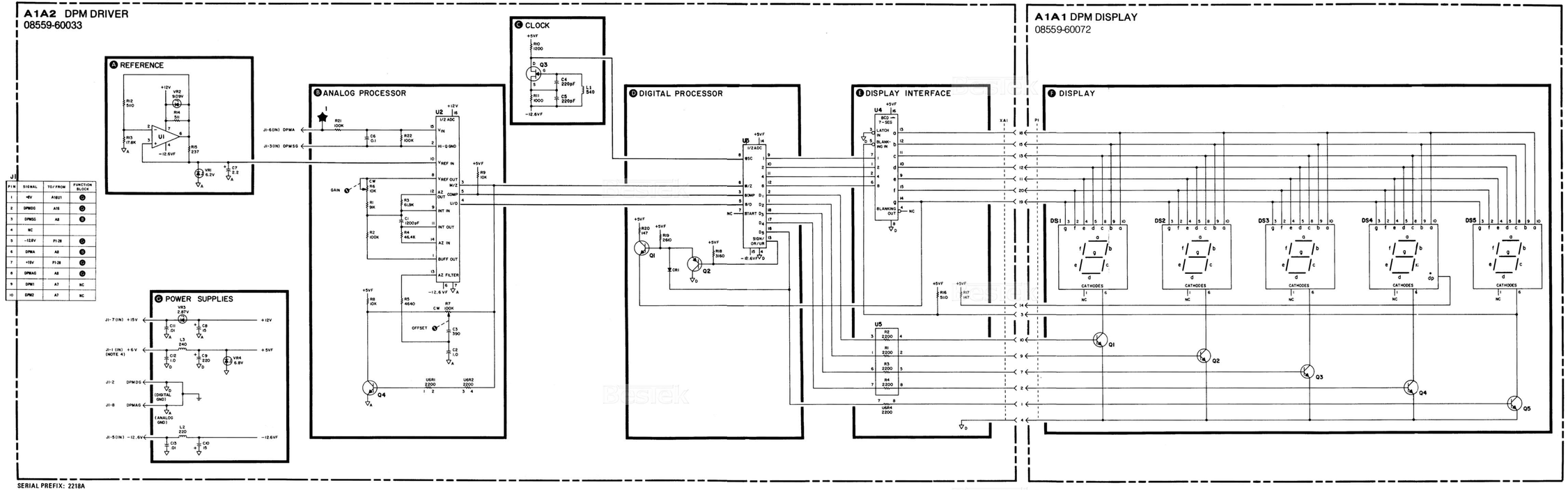

NOTES:

1. REFERENCE DESIGNATORS WITHIN THIS ASSEMBLY ARE ABBREVIATED. PREFIX ABBREVIATION WITH ASSEMBLY NUMBER FOR COMPLETE REFERENCE DESIGNATOR.
2. UNLESS OTHERWISE INDICATED: RESISTANCE IN OHMS (Ω) CAPACITANCE IN MICROFARADS (μF) INDUCTANCE IN MICROHENRIES (μH)
3. U6R3 (PINS 5 AND 6) IS NOT USED.
4. THERE IS A 1 VOLT VOLTAGE DROP ACROSS L3 THUS VOLTAGE SUPPLIED TO DPM CIRCUITRY IS +5V.
5. MNEMONIC TABLE:

MNEMONIC	DESCRIPTION
DPMA	DPM INPUT SIGNAL
DPMAG	DPM ANALOG GND
DPMDG	DPM DIGITAL GND
DPMSG	DPM SIGNAL GND

A1

FIGURE 8-6. DIGITAL PANEL METER ASSEMBLY A1, SCHEMATIC DIAGRAM (SERIAL PREFIX 2218A)

Pages 8-25 through 8-49/8-50: FRONT WITCH ASSEMBLY *A2*

Figure 8-10. Front Switch Assembly A2, Exploded View

2208A & Below	Delete Figure 8-10.
2109A00441 & Below	Add HP Part Number 08558-00021, Check Digit 0, PLATE LEVEL, POT (S1).

Table 8-2. Front Switch Board Assembly A2A1, Replaceable Parts

2208A & Below	Replace Table 8-2 with new Table 8-2 (SERIAL PREFIX 2208A) included in this Manual Backdating supplement.

TABLE 8-2. FRONT SWITCH BOARD ASSEMBLY A2, REPLACEABLE PARTS (1 OF 2) (SERIAL PREFIX 2208A)

Reference Designation	HP Part Number	C D	Qty	Description	Mfr Code	Mfr Part Number
A2	08559-60043	3	1	FRONT PANEL SWITCH ASSEMBLY	28480	08559-60043
A2CR1	1901-0033	2	1	DIODE-GEN PRP 100V 200MA DO-7	28480	1901-0033
A2CR2	1901-0050	3	4	DIODE-SWITCHING 80V 200MA 2NS DO-35	28480	1901-0050
A2CR3	1901-0050	3		DIODE-SWITCHING 80V 200MA 2NS DO-35	28480	1901-0050
A2CR4	1901-0050	3		DIODE-SWITCHING 80V 200MA 2NS DO-35	28480	1901-0050
A2CR5	1901-0050	3		DIODE-SWITCHING 80V 200MA 2NS DO-35	28480	1901-0050
A2J1				PART OF W1		
A2J2				PART OF W2		
A2J3	1200-0508	0	1	SOCKET-IC 14-CONT DIP-SLDR	28480	1200-0508
A2R1	0757-0447	4	1	RESISTOR 16.2K 1% .125W F TC=0+-100	24546	C4-1/8-T0-1622-F
A2R2	2100-3633	7	1	RESISTOR-VAR CONTROL CP 1K 10% LIN	28480	2100-3633
A2R3	2100-3744	1	2	RESISTOR-VAR CONTROL CCP 10K 10% LIN	01121	WP4G024S103UZ
A2R4	2100-3332	3	1	RESISTOR-TRMR 10K 20% CC TOP-ADJ 1-TRN	28480	2100-3332
A2R5	0757-0444	1	1	RESISTOR 12.1K 1% .125W F TC=0+-100	24546	C4-1/8-T0-1212-F
A2R6	2100-3785	0	1	RESISTOR-VAR CONTROL CCP 500 10% LIN	01121	WP4G024S501UZ
A2R7	2100-3786	1	1	RESISTOR-VAR CONTROL CCP 10K 20% 10CW	01121	WP4G024S103RZ
A2R8	0757-0280	3	1	RESISTOR 1K 1% .125W F TC=0+-100	24546	C4-1/8-T0-1001-F
A2R9				NOT ASSIGNED		
A2R10	0757-0317	7	1	RESISTOR 1.33K 1% .125W F TC=0+-100	24546	C4-1/8-T0-1331-F
A2R11	2100-3744	1		RESISTOR-VAR CONTROL CCP 10K 10% LIN	01121	WP4G024S103UZ
A2S1				REFERENCE LEVEL SWITCH (SEE A2 SWITCH PARTS)		
A2S2	3101-2213	0	1	AMPLITUDE SCALE SWITCH	28480	3101-2213
A2S3				SWEEP TIME SWITCH (SEE A2 SWITCH PARTS)		
A2S4				SWEEP TRIGGER SWITCH (SEE A2 SWITCH PARTS)		
A2S5				RESOLUTION BW SWITCH (SEE A2 SWITCH PARTS)		
A2S6				FREQ SPAN/DIV SWITCH (SEE A2 SWITCH PARTS)		
A2S7	3101-2376	6	1	SWITCH-PB 6-STATION 10MM C-C SPACING	28480	3101-2376
A2S8	3101-2124	2	2	SWITCH-PB DPDT ALTNG .25A 115VAC	28480	3101-2124
A2S9	3101-2124	2		SWITCH-PB DPDT ALTNG .25A 115VAC	28480	3101-2124
A2VR1	1902-3172	8	1	DIODE-ZNR 11V 2% DO-35 PD=.4W TC=+.062%	28480	1902-3172
A2W1	08559-60004	6	1	RIBBON CABLE, DPM/REAR SWITCH	28480	08559-60004
A2W2	08559-60003	5	1	RIBBON CABLE, FRONT SWITCH	28480	08559-60003
A2XD1	1200-0010	9	2	SOCKET-TUBE 2-CONT	28480	1200-0010
A2XD2	1200-0010	9		SOCKET-TUBE 2-CONT	28480	1200-0010
				A2 SWITCH PARTS		
	1410-0006	8	8	BALL-BRG TYPE .1875-DIA GRADE-50 SST	78707	GRADE 50
	08565-20049	3	4	BUSHING (S1,S3,S4,S5,S6)	28480	08565-20049
	08558-20089	2	1	BUSHING, SLOTTED (S6)	28480	08558-20089
	1490-0841	7	1	COUPLER, (S1)	28480	1490-0841
	08558-00022	1	1	CRANK, SLOTTED (S1)	28480	08558-00022
	08559-00012	0	1	DETENT, ATTENUATOR (S1)	28480	08559-00012
	08558-00020	9	1	DETENT PLATE (S1)	28480	08558-00020
	08565-00006	0	1	DETENT, SWEEP TIME (S3)	28480	08565-00006
	08558-00025	4	1	DETENT, RESOLUTION BW (S5)	28480	08558-00025
	08558-00024	3	1	DETENT, SWEEP TIME (S3)	28480	08558-00024
	08558-00026	5	1	DETENT, SWEEP TRIGGER (S4)	28480	08558-00026
	08558-20088	1	1	GEAR, 20T (S1)	28480	08558-20088
	1430-0036	6	1	GEAR, METER, 16T 32DP (S1)	71041	G462Y(MOD)
	08558-20058	5	1	HUB, COUPLING (S5, S6)	28480	08558-20058
	08559-60060	4	4	HUB, DRIVE (S1, S3, S4)	28480	08559-60060
	08558-20059	6	2	HUB, DRIVE (S5, S6)	28480	08558-20059
	08558-20062	1	1	LOCKOUT, FIXED (S1)	28480	08558-20062
	08558-20061	0	1	LOCKOUT, ROTATING (S1)	28480	08558-20061
	2950-0006	3	1	NUT, HEX 1/4-32 (S1)	28480	2950-0006
	08559-20007	5	4	NUT-HEX, SPACER (S1, S3, S4, S6)	28480	08559-20007
	1480-0367	1	10	PIN, DOWEL, .062DIA (S1, S4, S5, S6)	28480	1480-0367
	1480-0059	8	1	PIN, ROLL .062DIA (S1)	28480	1480-0059
	08558-00021	0	1	PLATE LEVEL, POT (S1)	28480	08558-00021
	08558-20043	8	1	ROTOR ASSY, ATTENUATOR (S1)	28480	08558-20043
	08558-40005	4	3	ROTOR, DOUBLE CONTACT (S1, S4, S6)	28480	08558-40005
	08558-20066	5	1	ROTOR, FREQ SPAN (S6)	28480	08558-20066
	08558-20108	6	1	ROTOR, SWEEP TIME	28480	08558-20108
	0510-0015	0	3	RTNR-R .125 OD (S3, S5)	28480	0510-0015
	0510-0053	6	2	RTNR-R .188 OD (S1)	28480	0510-0053
	1410-1860	4	5	SPR CPR .180LG (S1, S3, S4, S5, S6)	28480	1410-1860

See introduction to this section for ordering information
*Indicates factory selected value

TABLE 8-2. FRONT SWITCH BOARD ASSEMBLY A2, REPLACEABLE PARTS (2 OF 2) (SERIAL PREFIX 2218A)

Reference Designation	HP Part Number	CD	Qty	Description	Mfr Code	Mfr Part Number
	08559-20009	7	1	SHAFT, DRIVE, ATTENUATOR (S1)	28480	08559-20009
	08559-20012	2	1	SHAFT, FREQ SPAN (S6)	28480	08559-20012
	08559-20046	2	1	SHAFT, FIXED, REF LEVEL (S1)	28480	08559-20046
	08558-20055	2	1	SHAFT, MAN SWEEP (S4)	28480	08558-20055
	08565-20045	9	1	SHAFT, REF LEVEL (S1)	28480	08565-20045
	08559-20010	0	1	SHAFT, REF LEVEL FINE (S1)	28480	08559-20010
	08559-20011	1	1	SHAFT, RESOLUTION BW (S5)	28480	08559-20011
	08558-20049	4	1	SHAFT, SWEEP TIME (S3)	28480	08558-20049
	08558-20048	3	1	SHAFT, SWEEP TRIGGER (S4)	28480	08558-20048
	0380-0413	5	3	SPACER 1.250L .1141D (S1)	28480	0380-0413
	0380-0411	3	14	SPACER .500L .1141D (S1, S3, S4, S5, S6)	28480	0380-0411
	08558-20139	3	1	SPACER ROTOR (S5)	28400	08558-20139
	1460-0623	0	4	SPR CCR .1800D (S1, S3, S4, S5, S6)	28480	1460-0623
	1460-0532	0	1	SPR CPR .5400D (S1)	28480	1460-0532
	1460-0537	5	1	SPR TRS 1.100LG (S4)	28480	1460-0537
	1460-1376	2	1	SPR TRS 1.476LG (S6)	28480	1460-1376
	08558-00053	8	1	STOP ARM TRIGGER (S4)	28480	08558-00053
				A2 MISCELLANEOUS PARTS		
	2190-0016	3	4	WASHER LK INTL T 3/8 IN .377 ■ ■	28480	2190-0016
	2190-0019	6	14	WASHER LK HLCL NO. 4 .115 IN ID	28480	2190-0019
	2190-0067	4	1	WASHER-LK INTL T 1/4 IN .256 IN-ID	28480	2190-0067
	2190-0390	6	1	WASHER-FL NM 1/4 IN .26 IN ID .562 IN OD	28480	2190-0390
	2190-0724	0	8	WASHER LK 82 CTSK EXT T NO. 4 .116 IN ID	28480	2190-0724
	2200-0103	2	1	SCREW MACH 4 40 .25 IN LG PAN HD-POZI	28480	2200-0103
	2200-0119	0	3	SCREW MACH 4-40 1 IN-LG PAN HD-POZI	28480	2200-0119
	2200-0125	8	1	SCRFW MACH 4-40 1.5 IN-LG PAN-HD-POZI	28480	2200-0125
	2200-0140	7	2	SCREW MACH 4 40 .25 ■ LG 100 DEG	28480	2200-0140
	2200-0149	6	2	SCREW MACH 4-40 .675-IN LC PAN HD-POZI	28480	2200-0149
	2200-0151	0	3	SCREW MACH 4 40 .75 IN-IG PAN-HD-POZI	28480	2200-0151
	2200-0153	2	1	SCRFW MACH 4-40 .875-IN-LG PAN-HD-POZI	28480	2200-0153
	2200-0155	4	1	SCREW MACH 4-40 1 ■ N-LG PAN HD POZ■	20400	2200-0155
	2200-0164	3	4	SCREW MACH 4-40 .188 ■N-LG UNCT 82 DFG	28480	2200-0164
	2200-0165	6	6	SCRCU-MACH 4-40 .25-IN-IG 82 DEG	28480	2200-0165
	2200-0168	9	3	SCREW MACH 4-40 .438-IN-LG 82 DEG	28480	2200-0168
	2200-0509	2	1	SCREW MACH 4-40 1.625 ■N-LG PAN-HD POZI	28480	2200-0509
	2200-0781	2	3	SCRCU MACH 4-40 2.75-IN-LG PAN-HD-POZI	28480	2200-0781
	2260-0001	3	15	NUT-HFX-DBL-CHAM 4 40-THD .094-IN-THK	28480	2260-0001
	2260-0002	6	2	NUT-HEX-DBL-CHAM 4-40-THD .062-IN-THK	28480	2260-0002
	3030-0007	5	20	SCRFU-SET 4-40 .125-IN-LC SMALL CUP-PT	28480	3030-0007
	3030-0051	9	2	SCREU-SET 4-40 .094-IN-LC SMALL CUP PT	28480	3030-0051
	3030-0145	2	4	SCREU SET 6-32 .125 IN-LG FLAT PT AIY	28480	3030-0145
	3050-0011	3	1	WASHER-FL NM NO. 5 .13-IN D .25-IN-OD	78400	3050-0011
	3050-0017	9	4	WASHER-FL MTLC 1/4 IN .26-IN-ID	28480	3050-0017
	3050-0032	8	1	UASHER-FL MTLC NO. 8 .188ND	28480	3050-0032
	3050-0105	6	11	UACHFR-FL MTLC NO. 4 .125-IN-ID	20480	3050-0105
	3050-0124	9	5	UASHER-FL MTLC NO. 5 .13 .IN-ID	28480	3050-0124
	08559-00022	2	1	MYLAR CABLE SHIELD	28480	08559-00022

See introduction to this section for ordering information
*Indicates factory selected value

Pages 8-51 through 8-65/8-66: YIG-TUNED OSCILLATOR ASSEMBLY A6

Table 8-3. RF Section, Replaceable Parts

2240A & Below

Add **A5MP3,** HP Part Number 08559-20041, Check Digit 7, COVER, 2ND L.O.
Under Miscellaneous Parts:
Change the quantity of HP Part Number 2200-0119 from 7 to 9.
Delete HP Part Number 2200-0156.

2236A & Below

Change A5 to HP Part Number 08559-60005, Check Digit 7.
Change **A5MP2** to HP Part Number 08559-20002, Check Digit **0,** CAVITY BLOCK.
Change A6 to HP Part Number 5086-7301, Check Digit 5.
Add HP Part Number **08559-00033,** YTO SHIELD.

1951A00285 & Below

NOTE

The following components have preferred replacements; **A5C4** and **A5L2.** If the instrument does not contain the preferred replacement values, as shown in this Replaceable Parts list and Schematic in the Manual, then both components should be changed at the same time.

1951A, 1945A & Below

Change **A5CR2** and **A5CR3** to HP Part Number **0122-0078,** Check Digit 2, DIODE-VVC **BVR=30V Q=225-MIN.**

1909A & Below

Change **A5L3** to HP Part Number 08559-00020, Check Digit 0, COUPLING LOOP INPUT.

Figure 8-21. 2nd Converter, Component Locations

2236A & Below

Delete Front YIG Mounting Bracket, HP Part Number 08559-00035.
Delete Rear YIG Mounting Bracket, HP Part Number 08559-00036.

NOTE

Prior to 2236A serial prefix, the YIG-Tuned Oscillator Assembly A6 was mounted to the side gusset.

Figure 8-22. YIC-Tuned **Oscillator Assembly A6 and Shielded Components**

2236A & Below

Delete Figure 8-22.

Figure 8-25. RF Section, Schematic Diagram

2236A & Below

Replace appropriate sections of Figure 8-25 with new P/O Figure 8-25 (SERIAL PREFIX **2236A)** included in this Manual Backdating supplement.

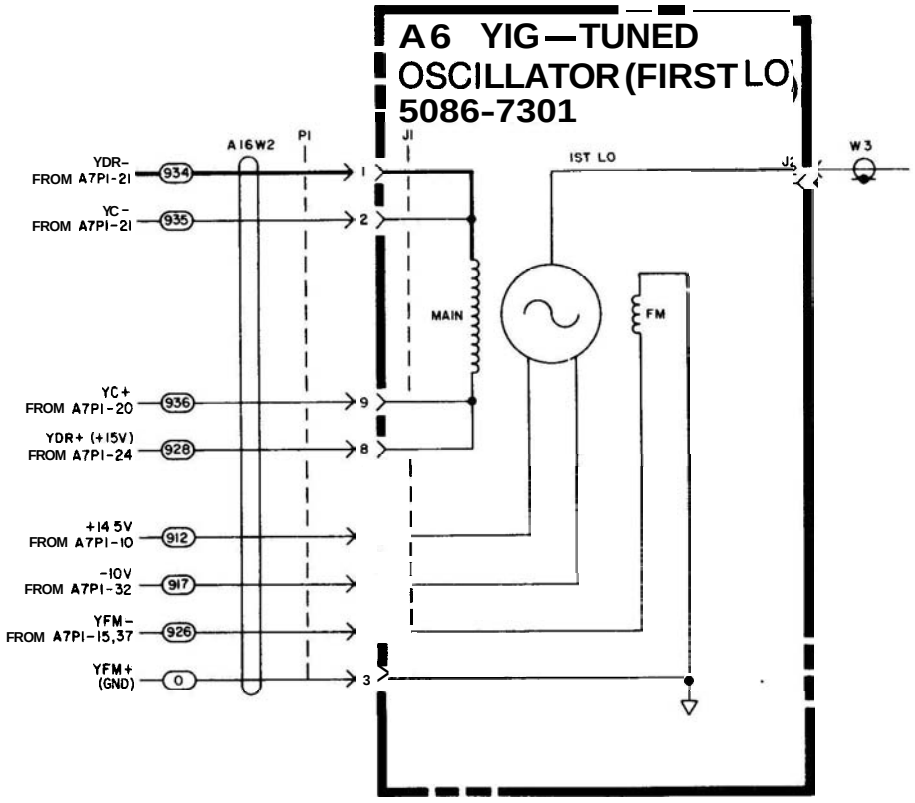

P/O FIGURE 8-25. RF SECTION, SCHEMATIC DIAGRAM (SERIAL PREFIX 2236A)

Pages 8-67 through 8-81/8-82: FREQUENCY CONTROL ASSEMBLY A7

Table 8-4. Frequency Control Assembly A7, Replaceable Parts

2236A & Below — Replace Table 8-4 with new Table 8-4 (SERIAL PREFIX 2236A) included in this Manual Backdating supplement.

2208A & Below — Make the following changes to new Table 8-4 (SERIAL PREFIX 2236A):
Change A7 to HP Part Number 08559-60021, Check Digit 7.
Add A7C1 and A7C2, HP Part Number 0180-2208, Check Digit 6, CAPACITOR-FXD 220UF +-10% 10VDC TA.
Add A7C11, HP Part Number 0160-2055, Check Digit 9, CAPACITOR-FXD .01UF +80-20% 100VDC CER.
Delete the following:
A7C13, A7C14, A7CR8, A7CR9, A7Q19, and A7Q20.
Change A7R30 to HP Part Number 0698-3428, Check Digit 1, RESISTOR 14.7 1% .125W F TC=0+-100.
Change A7R31 to HP Part Number 0757-0199, Check Digit 3, RESISTOR 21.5K 1% .125W F TC=0+-100.
Add A7R98, HP Part Number 0757-0465, Check Digit 6, RESISTOR 100K 1% .125W F TC=0+-100.
Delete the following:
A7R100, A7R101, A7R102, A7U12, and A7VR1.
Add A7W1, HP Part Number 8159-0005, Check Digit 0, WIRE 22AWG W PVC 1X22 80C.

2004A & Below — Delete A7R99.

Figure 8-28. Frequency Control Assembly A7, Component Locations

2236A & Below — Replace Figure 8-28 with new Figure 8-28 (SERIAL PREFIX 2236A) included in this Manual Backdating supplement.

2208A & Below — Replace Figure 8-28 with new Figure 8-28 (SERIAL PREFIX 2208A) included in this Manual Backdating supplement.
Add the following to Figure 8-28 (SERIAL PREFIX 2208A):
Add C12 between TP2 and the negative (-) side of C8.
Add R99 to the left of TP7.

2004A & Below — Delete A7R99.

Figure 8-29. Frequency Control Assembly A7, Schematic Diagram (1 of 2)

2236A & Below — Replace Figure 8-29 (1 of 2) with new Figure 8-29 (1 of 2) (SERIAL PREFIX 2236A) included in this Manual Backdating supplement.

2208A & Below — Make the following changes to Figure 8-29 (1 of 2) (SERIAL PREFIX 2236A):
Change A7 to HP Part Number 08559-60021.
In function block (A), add R98, 100K, as follows:
Open the FM/MAIN lice at the left side of R33.
Connect one side of R98 to the left side of R33.
Connect the other side of R98 to the FM/MAIN line.

Figure 8-29. Frequency Control Assembly A7, Schematic Diagram (1 of 2) (COG~'~)

2004A & Below — Make the following changes in function block (A):
Delete R99.
Connect pin 7 of U10B to pin 10 of U10C.

Figure 8-29. Frequency Control Assembly A7, Schematic Diagram (2 of 2)

2236A & Below — Replace Figure 8-29 (2 of 2) with new Figure 8-29 (2 of 2) (SERIAL PREFIX 2236A) included in this Manual Backdating supplement.

2208A & Below — Make the following changes to Figure 8-29 (2 of 2) (SERIAL PREFIX 2236A):
Change A7 to HP Part Number 08559-60021.
Replace function block (E) with P/O Figure 8-29 (SERIAL PREFIX 2208A) included in this Manual Backdating supplement.
In function block (G), delete C14 and R102.

TABLE 8-4. FREQUENCY CONTROL ASSEMBLY A7, REPLACEABLE PARTS (1 OF 3) (SERIAL PREFIX 2236A)

Reference Designation	HP Part Number	CD	Qty	Description	Mfr Code	Mfr Part Number
A7	08559-60068	2	1	FREQUENCY CONTROL BOARD	28480	08559-60068
A7C3*	0180-0291	3	2	CAPACITOR-FXD 1UF+-10% 35VDC TA	56289	150D105X9035A2
A7C4	0180-2141	6	1	CAPACITOR-FXD 3.3UF+-10% 50VDC TA	56289	150D335X9050B2
A7C5	0160-3457	7	1	CAPACITOR-FXD 2000PF +-10% 250VDC CER	28480	0160-3457
A7C6	0160-4004	8	2	CAPACITOR-FXD .1UF +-20% 50VDC CER	28480	0160-4004
A7C7	0180-0197	8	1	CAPACITOR-FXD 2.2UF+-10% 20VDC TA	56289	150D225X9020A2
A7C8	0180-2207	5	1	CAPACITOR-FXD 100UF+-10% 10VDC TA	56289	150D107X9010R2
A7C9	0180-1746	5	2	CAPACITOR-FXD 150F+-10% 20VDC TA	56289	150D156X9020B2
A7C10	0180-1746	5		CAPACITOR-FXD 15UF+-10% 20VDC TA	56289	150D156X9020D2
A7C12	0180-0291	3		CAPACITOR-FXD 1UF+-10% 35VDC TA	56289	150D105X9035A2
A7C13	0160-4004	8		CAPACITOR-FXD .1UF +-20% 50VDC CER	28480	0160-4004
A7C14	0140-0198	5	1	CAPACITOR-FXD 200PF +-5% 300VDC MICA	72136	DM15F201J0300WV1CR
A7CR1	1901-0040	1	6	DIODE-SWITCHING 30V 50MA 2NS DO-35	28480	1901-0040
A7CR2	1901-0040	1		DIODE-SWITCHING 30V 50MA 2NS DO-35	28480	1901-0040
A7CR3	1901-0050	3	1	DIODE-SWITCHING 80V 200MA 2NS DO-35	28480	1901-0050
A7CR4	1901-0040	1		DIODE-SWITCHING 30V 50MA 2NS DO-35	28480	1901-0040
A7CR5	1901-0040	1		DIODE-SWITCHING 30V 50MA 2NS DO-35	28480	1901-0040
A7CR6	1901-0040	1		DIODE-SWITCHING 30V 50MA 2NS DO-35	28480	1901-0040
A7CR7	1901-0040	1		DIODE-SWITCHING 30V 50MA 2NS DO-35	28480	1901-0040
A7CR8	1901-0518	8	2	DIODE-SM SIG SCHOTTKY	28480	1901-0518
A7CR9	1901-0518	8		DIODE-SM SIG SCHOTTKY	28480	1901-0518
A7J1	1251-4700	9	1	CONNECTOR 3-PIN M POST TYPE	28480	1251-4700
A7L1	08558-80011	6	2	FILTER, COIL, BLUE	28480	08558-80011
A7L2	08558-80011	6		FILTER, COIL, BLUE	28480	08558-80011
A7Q1	1854-0637	1	4	TRANSISTOR NPN 2N2219A SI TO-5 PD=800MW	01295	2N2219A
A7Q2	1854-0637	1		TRANSISTOR NPN 2N2219A SI TO-5 PD=800MW	01295	2N2219A
A7Q3	1853-0213	7	1	TRANSISTOR PNP 2N4236 SI TO-5 PD=1W	04713	2N4236
A7Q4				NOT ASSIGNED		
A7Q5	1855-0251	7	1	TRANSISTOR MOSFET N-CHAN E-MODE TO-39 SI	28480	1855-0251
A7Q6	1854-0404	0	2	TRANSISTOR NPN SI TO-18 PD=360MW	28480	1854-0404
A7Q7	1854-0023	9	1	TRANSISTOR NPN SI TO-18 PD=360MW	28480	1854-0023
A7Q8	1854-0637	1		TRANSISTOR NPN 2N2219A SI TO-5 PD=800MW	01295	2N2219A
A7Q9	1853-0281	9	4	TRANSISTOR PNP 2N2907A SI TO-18 PD=400MW	04713	2N2907A
A7Q10	1855-0421	3	2	TRANSISTOR J-FET 2N5114 P-CHAN D-MODE	17856	2N5114
A7Q11	1853-0281	9		TRANSISTOR PNP 2N2907A SI TO-18 PD=400MW	04713	2N2907A
A7Q12	1853-0281	9		TRANSISTOR PNP 2N2907A SI TO-18 PD=400MW	04713	2N2907A
A7Q13	1855-0421	3		TRANSISTOR J-FET 2N5114 P-CHAN D-MODE	17856	2N5114
A7Q14	1853-0281	9		TRANSISTOR PNP 2N2907A SI TO-18 PD=400MW	04713	2N2907A
A7Q15	1855-0417	7	1	TRANSISTOR J-FET N-CHAN D-MODE TO-18 SI	28480	1855-0417
A7Q16	1854-0637	1		TRANSISTOR NPN 2N2219A SI TO-5 PD=800MW	01295	2N2219A
A7Q17	1853-0314	9	1	TRANSISTOR PNP 2N2905A SI TO-39 PD=600MW	04713	2N2905A
A7Q18	1854-0404	0		TRANSISTOR NPN SI TO-18 PD=360MW	28480	1854-0404
A7Q19	1855-0278	8	1	TRANSISTOR J-FET 2N5116 P-CHAN D-MODE	17856	2N5116
A7Q20	1855-0420	2	1	TRANSISTOR J-FET 2N4391 N-CHAN D-MODE	01295	2N4391
A7R1	0698-3260	9	4	RESISTOR 464K 1% .125W F TC=0+-100	28480	0698-3260
A7R2	0698-3160	8	1	RESISTOR 31.6K 1% .125W F TC=0+-100	24546	C4-1/8-T0-3162-F
A7R3	0757-0280	3	3	RESISTOR 1K 1% .125W F TC=0+-100	24546	C4-1/8-T0-1001-F
A7R4	0698-3260	9		RESISTOR 464K 1% .125W F TC=0+-100	28480	0698-3260
A7R5	0698-3260	9		RESISTOR 464K 1% .125W F TC=0+-100	28480	0698-3260
A7R6	0757-0465	6	14	RESISTOR 100K 1% .125W F TC=0+-100	24546	C4-1/8-T0-1003-F
A7R7	0757-0438	3	5	RESISTOR 5.11K 1% .125W F TC=0+-100	24546	C4-1/8-T0-5111-F
A7R8	0757-0465	6		RESISTOR 100K 1% .125W F TC=0+-100	24546	C4-1/8-T0-1003-F
A7R9	0698-3260	9		RESISTOR 464K 1% .125W F TC=0+-100	28480	0698-3260
A7R10	0757-0465	6		RESISTOR 100K 1% .125W F TC=0+-100	24546	C4-1/8-T0-1003-F
A7R11	0757-0465	6		RESISTOR 100K 1% .125W F TC=0+-100	24546	C4-1/8-T0-1003-F
A7R12	0757-0442	9	12	RESISTOR 10K 1% .125W F TC=0+-100	24546	C4-1/8-T0-1002-F
A7R13	0757-0442	9		RESISTOR 10K 1% .125W F TC=0+-100	24546	C4-1/8-T0-1002-F
A7R14	0699-0903	3	7	RESISTOR 10K .1% .1W F TC=0+-10	28480	0699-0903
A7R15	0699-0903	3		RESISTOR 10K .1% .1W F TC=0+-10	28480	0699-0903
A7R16	0699-0903	3		RESISTOR 10K .1% .1W F TC=0+-10	28480	0699-0903
A7R17	0699-0903	3		RESISTOR 10K .1% .1W F TC=0+-10	28480	0699-0903
A7R18	0698-3456	5	2	RESISTOR 287K 1% .125W F TC=0+-100	24546	C4-1/8-T0-2873-F
A7R19	0698-3442	9	1	RESISTOR 237 1% .125W F TC=0+-100	24546	C4-1/8-T0-237R-F
A7R20	0757-0442	9		RESISTOR 10K 1% .125W F TC=0+-100	24546	C4-1/8-T0-1002-F
A7R21	0757-0442	9		RESISTOR 10K 1% .125W F TC=0+-100	24546	C4-1/8-T0-1002-F
A7R22	0757-0441	8	1	RESISTOR 8.25K 1% .125W F TC=0+-100	24546	C4-1/8-T0-8251-F
A7R23	0757-0438	3		RESISTOR 5.11K 1% .125W F TC=0+-100	24546	C4-1/8-T0-5111-F
A7R24	0757-0123	3	2	RESISTOR 34.8K 1% .125W F TC=0+-100	28480	0757-0123
A7R25	0757-0419	0	1	RESISTOR 681 1% .125W F TC=0+-100	24546	C4-1/8-T0-681R-F

See introduction to this section for ordering information
*Indicates factory selected value

TABLE 8-4. FREQUENCY CONTROL ASSEMBLY A7, REPLACEABLE PARTS (2 OF 3) (SERIAL PREFIX 2236A)

Reference Designation	HP Part Number	C D	Qty	Description	Mfr Code	Mfr Part Number
A7R26	0757-0279	0	2	RESISTOR 3.16K 1% .125W F TC=0+ 100	24546	C4-1/8-T0-3161-F
A7R27	0811-3492	1	1	RESISTOR 133 1% 12U PW TC=0+-2	211480	0811-3492
A7R28	2100-1753	8	1	RESISTOR TRMR 20 5% WW SIDE ADJ 1 TRN	28480	2100-1753
A7R29	0698-3157	3	2	RESISTOR 19.6K 1% .125W F TC=0+-100	24546	C4-1/8-T0-1962-F
A7R30	0757-0442	9		RESISTOR 10K 1% .125W F TC=0+-100	24546	C4-1/8-T0-1002-F
A7R31	0757-0442	9		RESISTOR 10K 1% .125W F TC=0+-100	24546	C4-1/8-T0-1002-F
A7R32	0698-3157	3		RESISTOR 19.6K 1% .125W F TC=0+ 100	24546	C4-1/8-T0-1962-F
A7R33	0757-0465	6		RESISTOR IOOK 1% .125W F TC=0+-100	74546	C4-1/8-T0-1003-F
A7R34	0757-0442	9		RESISTOR 10K 1% .125W F TC=0+-100	24546	C4-1/8-T0-1002-F
A7R35	0757-0290	5	2	RESISTOR 6.19K 1% .125W F TC=0+-100	19701	MF4C1/8-T0-6191-F
A7R36	0757-0290	5		RESISTOR 6.19K 1% .125W F TC=0+-100	19701	MF4C1/8-T0-6191-F
A7R37	0757-0401	0	1	RESISTOR 100 1% .125W F TC=0+-100	74546	C4-1/8-T0-101-F
A7R38	2100-1756	1	1	RESISTOR-TRHR 200 5% WW SIDE ADJ I-TRN	28480	2100-1756
A7R39	0757-0795	5	1	RESISTOR 75 1% .5W F TC=0+-100	19701	MF-1/2-T0-75R0-F
A7R40	0698-6360	6	1	RESISTOR 10K .1% .125W F TC=0+-25	78400	0698-6360
A7R41	0699-0900	0	1	RESISTOR 12.4K .1% .1W F TC=0+-10	28480	0699-0900
A7R42	0757-0280	3		RESISTOR 1K 1% .125W F TC=0+-100	24546	C4-1/8-T0-1001-F
A7R43	0757-0442	9		RESISTOR 10K 1% .125W F TC=0+-100	24546	C4-1/8-T0-1002-F
A7R44				NOT ASSIGNED		
A7R45	0811-1003	6	1	RESISTOR 50 1% 12W PU	28480	0811-1003
A7R46	0757-0442	9		RESISTOR 10K 1% .125W F TC=0+-100	24546	C4-1/8-T0-1002-F
A7R47	0757-0424	7	1	RESISTOR 1.1K 1% .125W F TC=0+-100	714546	C4-1/8-T0-1101-F
A7R48	0699-0903	3		RESISTOR 10K .1% .1W F TC=0+-10	28480	0699-0903
A7R49	0699-0903	3		RESISTOR 10K .1% .1W F TC=0+-10	20400	0699-0903
A7R50	0698-0083	8	1	RESISTOR 1.96K 1% .125W F TC=0+-100	24546	C4-1/8-T0-1961-F
A7R51	0811-1175	3	1	RESISTOR 4.22K 1% .125W PWW TC=0+-10	07008	KP61-4221-1
A7R52	2100-3123	0	1	RESISTOR-TRHR 500 10% C SIDE-ADJ 17 TRN	02111	43P501
A7R53	0811-3053	0	1	RESISTOR 3.16K 1% .125W PWU TC=0+-10	20940	114-1/8-D-3161-F
A7R54	0699-0903	3		RESISTOR 10K .1% .1W F TC=0+ 10	28480	0699-0903
A7R55	2100-2851	9	2	RESISTOR-TRHR 2K 10% WW SIDE-ADJ 20 TRN	02660	3810P-202
A7R56	0699-0901	1	1	RESISTOR 33.5K .1% .1W F TC=0+-10	28480	0699-0901
A7R57	0757-0438	3		RESISTOR 5.11K 1% .125W F TC=0+-100	24546	C4-1/8-T0-5111-F
A7R58	0757-0440	7	1	RESISTOR 7.5K 1% .125W F TC=0+-100	24546	C4-1/8-T0-7501-F
A7R59	0698-3153	9	1	RESISTOR 3.83K 1% .125W F TC=0+-100	24546	C4-1/8-T0-3831-F
A7R60	0757-0464	5	1	RESISTOR 90.9K 1% .125W F TC=0+-100	24546	C4-1/8-T0-9092-F
A7R61	0698-7929	5	1	RESISTOR 9.09K .1% .125W F TC=0+-50	19701	MF4C1/8-T2-9091-B
A7R62	0757-0202	9	1	RESISTOR 13.7K 1% .125W F TC=0+-50	28480	0757-0202
A7R63	0698-8657	8	1	RESISTOR 6.81K .1% .125W F TC=0+-50	28480	0698-8657
A7R64	0698-3532	8	1	RESISTOR 18.2K .5% .125W F TC=0+-100	03888	PME55-1/8-T0-1822-D
A7R65	0698-6847	4	1	RESISTOR 6.04K .5% .125W F TC=0+-50	24546	NC55-1/8-T2-6041-D
A7R66	0698-8608	9	1	RESISTOR 4.525K .1% .125W F TC=0+-25	284110	0698-8608
A7R67	0757-0465	6		RESISTOR 100K 1% .125W F TC=0+-100	24546	C4-1/8-T0-1003-F
A7R68	0757-0442	9		RESISTOR 10K 1% .125W F TC=0+-100	24546	C4-1/8-T0-1002-F
A7R69	0757-0438	3		RESISTOR 5.11K 1% .125W F TC=0+-100	24546	C4-1/8-T0-5111-F
A7R70	0757-0458	7	7	RESISTOR 51.1K 1% .125W F TC=0+-100	24546	C4-1/8-T0-5112-F
A7R71	0757-0279	0		RESISTOR 3.16K 1% .125W F TC=0+-100	24546	C4-1/8-T0-3161-F
A7R72	0757-0438	3		RESISTOR 5.11K 1% .125W F TC=0+-100	24546	C4-1/8-T0-5111-F
A7R73	0757-0123	3		RESISTOR 34.8K 1% .125W F TC=0+-100	20480	0757-0123
A7R74	2100-1758	3	1	RESISTOR-TRMR 1K 5% WW SIDE-ADJ 1-TRN	28480	2100-1758
A7R75	0757-0463	4	1	RESISTOR 82.5K 1% .125W F TC=0+-100	24546	C4-1/8-T0-8252-F
A7R76	0757-0462	3	2	RESISTOR 75K 1% .125W F TC=0+-100	24546	C4-1/8-T0-7502-F
A7R77	0757-0462	3		RESISTOR 75K 1% .125W F TC=0+-100	24546	C4-1/8-T0-7502-F
A7R78	0757-0444	1	1	RESISTOR 12.1K 1% .125W F TC=0+-100	24546	C4-1/8-T0-1212-F
A7R79	0757-0442	9		RESISTOR IOK 1% .125W F TC=0+-100	24546	C4-1/8-T0-1002-F
A7R80	0757-0289	2	1	RESISTOR 13.3K 1% .125W F TC=0+-100	19701	MF4C1/8-T0-1332-F
A7R81	0757-0280	3		RESISTOR IK 1% .125W F TC=0+-100	24546	C4-1/8-T0-1001-F
A7R82	0757-0458	7		RESISTOR 51.1K 1% .125W F TC=0+-100	24546	C4-1/8-T0-5112-F
A7R83	0757-0458	7		RESISTOR 51.1K 1% .125W F TC=0+-100	24546	C4-1/8-T0-5112-F
A7R84	0757-0458	7		RESISTOR 51.1K 1% .125W F TC=0+-100	24546	C4-1/8-T0-5112-F
A7R85	0757-0458	7		RESISTOR 51.1K 1% .125W F TC=0+-100	24546	C4-1/8-T0-5112-F
A7R86	0757-0458	7		RESISTOR 51.1K 1% .125W F TC=0+-100	24546	C4-1/8-T0-5112-F
A7R87	0757-0458	7		RESISTOR 51.1K 1% .125W F TC=0+-100	24546	C4-1/8-T0-5112-F
A7R88	0757-0465	6		RESISTOR 100K 1% .125W F TC=0+-100	24546	C4-1/8-T0-1003-F
A7R89	0757-0465	6		RESISTOR IOOK 1% .125W F TC=0+-100	24546	C4-1/8-T0-1003-F
A7R90	0757-0465	6		RESISTOR IOOK 1% .125W F TC=0+-100	24546	C4-1/8-T0-1003-F
A7R91	0757-0465	6		RESISTOR IOOK 1% .125W F TC=0+-100	24546	C4-1/8-T0-1003-F
A7R92	0757-0465	6		RESISTOR 100K 1% .125W F TC=0+-100	24546	C4-1/8-T0-1003-F
A7R93	0757-0465	6		RESISTOR 100K 1% .125W F TC=0+-100	24546	C4-1/8-T0-1003-F
A7R94*	0698-3452	1	1	RESISTOR 147K 1% .125W F TC=0+-100	24546	C4-1/8-T0-1473-F
A7R95	2100-2851	9		RESISTOR-TRMR 2K 10% UU SIDE-ADS 20-TRN	02660	3810P-202
A7R96	0757-0442	9		RESISTOR 10K 1% .125W F TC-0+-100	24546	C4-1/8-T0-1002-F
A7R97	0698-3456	5		RESISTOR 287K 1% .125W F TC=0+-100	24546	C4-1/8-T0-2873-F
A7R99	2100-3426	6	1	RESISTOR-TRHR 20 10% C SIDE-ADJ I-TRN	28480	2100-3426
A7R100	0757-0465	6		RESISTOR IOOK 1% .125W F TC=0+-100	24546	C4-1/8-T0-1003-F
A7R101	0757-0465	6		RESISTOR IOOK 1% .125W F TC=0+-100	24546	C4-1/8-T0-1003-F

See introduction to this section for ordering information
***Indicates factory selected value**

TABLE 8-4. FREQUENCY CONTROL ASSEMBLY A7, REPLACEABLE PARTS (3 OF 3) (SERIAL PREFIX 2236A)

Reference Designation	HP Part Number	C D	Qty	Description	Mfr Code	Mfr Part Number
A7R102	0698-7212	9	1	RESISTOR 100 1% .05W F TC=0+-100	24546	C3-1/8-TO-100R-F
A7TP12	1251-0600	8	12	CONNECTOR-SGL CONT PIN 1.14 MM-BSC 57 SO	28480	1251-0600
A7U1	1826-0227	8	5	IC OP AMP LOW-DRIFT TO-99 PKG	06665	OP-05CJ
A7U2	1826-0102	6	3	IC OP AMP LOW-BIAS-H-IMPD TO-99 PKG	27014	LM312H
A7U3	1826-0227	8		IC OP AMP LOW-DRIFT TO-99 PKG	06665	OP-05CJ
A7U4	1826-0102	6		IC OP AMP LOW-BIAS-H-IMPD TO-99 PKG	27014	LM312H
A7U5	1826-0227	8		IC OP AMP LOW-DRIFT TO-99 PKG	06665	OP-05CJ
A7U6	1826-0227	8		IC OP AMP LOW-DRIFT TO-99 PKG	06665	OP-05CJ
A7U7	1820-1526	8	1	IC DCDR CMOS BCD-TO-DEC 4 TO-10-LINE	04713	MC14028BCL
A7U8	1826-0102	6		IC OP AMP LOW-BIAS-H-IMPD TO-99 PKG	27014	LM312H
A7U9	1858-0023	7	1	TRANSISTOR ARRAY 16-PIN PLSTC DIP	3L585	CA3081E
A7U10	1826-0417	6	1	IC SWITCH ANLG QUAD 16-DIP-C PKG	27014	LF13333D
A7U11	1826-0371	1	1	IC OP AMP LOW-BIAS-H-IMPD TO-99 PKG	27014	LF256H
A7U12	1826-0229	8		IC OP AMP LOW-DRIFT TO-99 PKG	06665	OP-05CJ
A7VR1	1902-0579	3	1	DIODE-ZNR 5.1V 5% PD=1W IR=10UA	28480	1902-0579
A7VR2	1902-0625	8	1	DIODE-ZNR 1N829 6.2V 5% DO-7 PD=.25W	04713	1N829
A7VR3	1902-3193	3	1	DIODE-ZNR 13.3V 5% DO-35 PD=.4W	28480	1902-3193
				A7 MISCELLANEOUS PARTS		
	0520-0128	7	4	SCREW MACH 2-56 .25 IN-C PAN HD POZI	28480	0520-0128
	0510-0001	4	4	THREADED INSERT-NUT 6-32 .062-IN-LG STL	28480	0510-0001
	1205-0025	0	3	HEAT SINK SGL TO-5/TO-39-CS	30161	3225B
	1200-0173	5	3	INSULATOR-XSTR DAP-GL	28480	1200-0173
	2190-0014	1	4	WASHER LK INTL T NO. 2 .092-IN-ID	28480	2190-0014
	2200-0107	6	1	SCREW MACH 4-40 .375 IN-LG PAN HD POZI	28480	2200-0107

See introduction to this section for ordering information
***Indicates factory selected value**

A7
FREQUENCYCONTROL

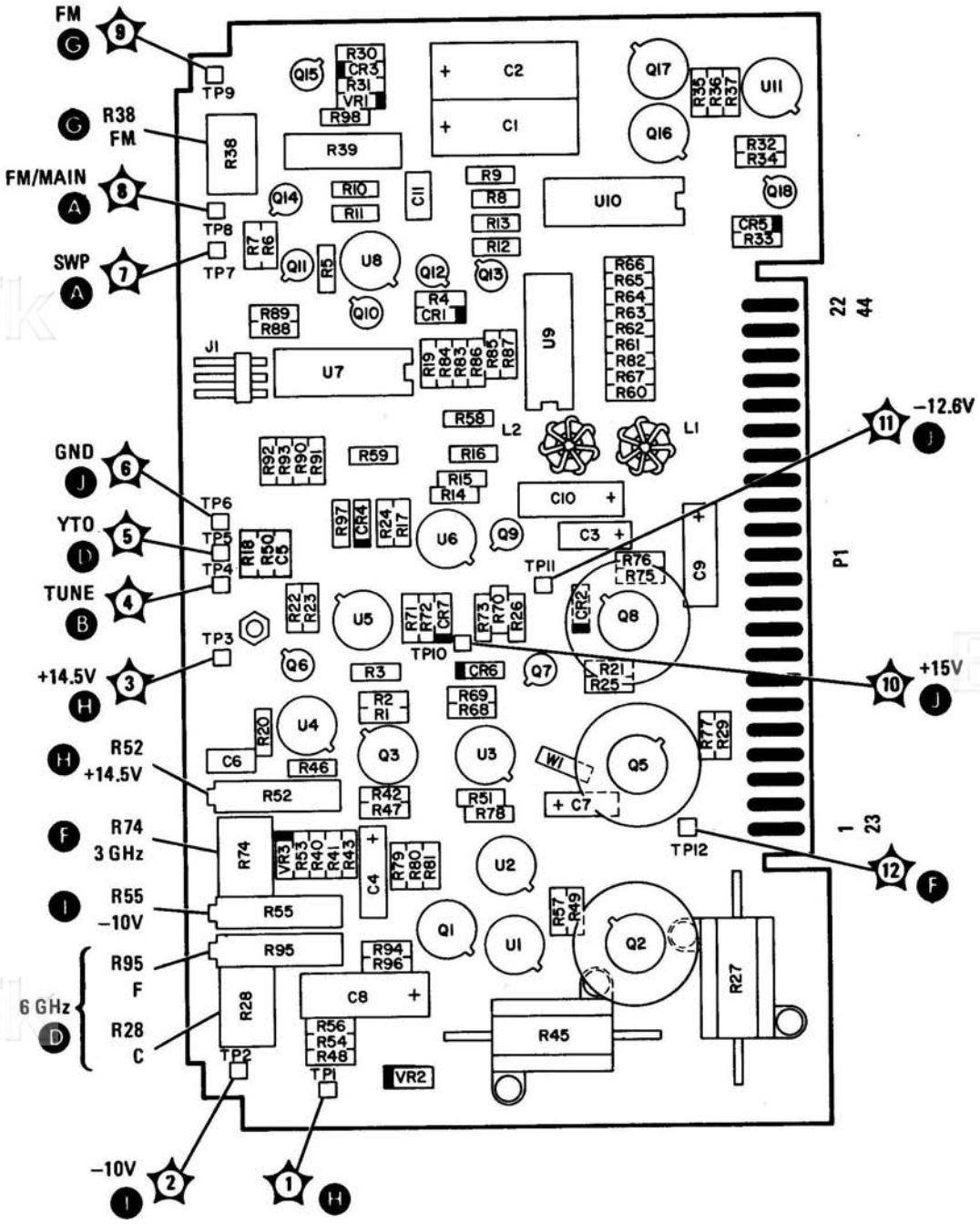

FIGURE 828. FREQUENCY CONTROL ASSEMBLY A7, COMPONENT LOCATIONS (SERIAL PREFIX 2236A)

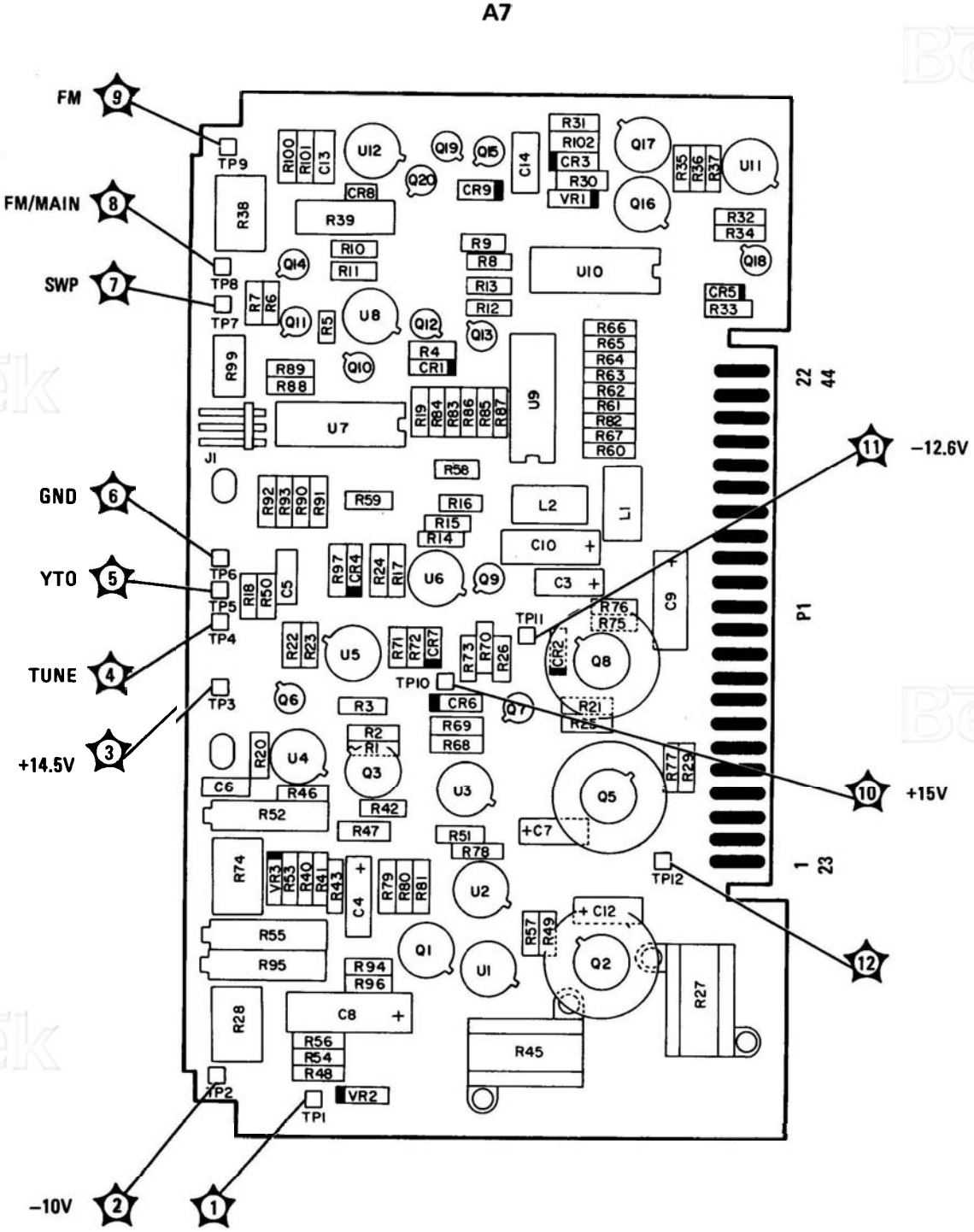

FIGURE 828. FREQUENCY CONTROL ASSEMBLY A7, COMPONENT LOCATIONS (SERIAL PREFIX 2208A)

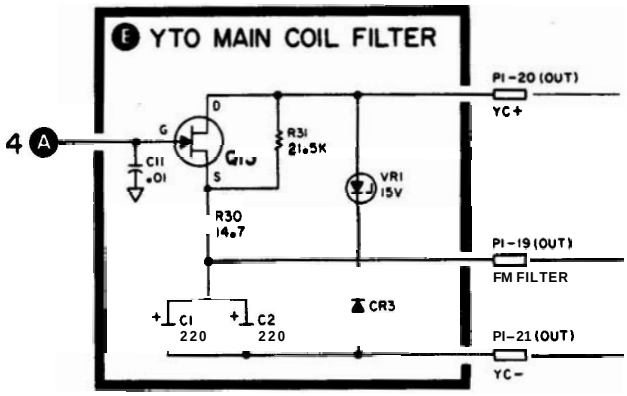

P/O FIGURE 829. FREQUENCY CONTROL ASSEMBLY A7, SCHEMATIC DIAGRAM (SERIAL PREFIX 2208A)

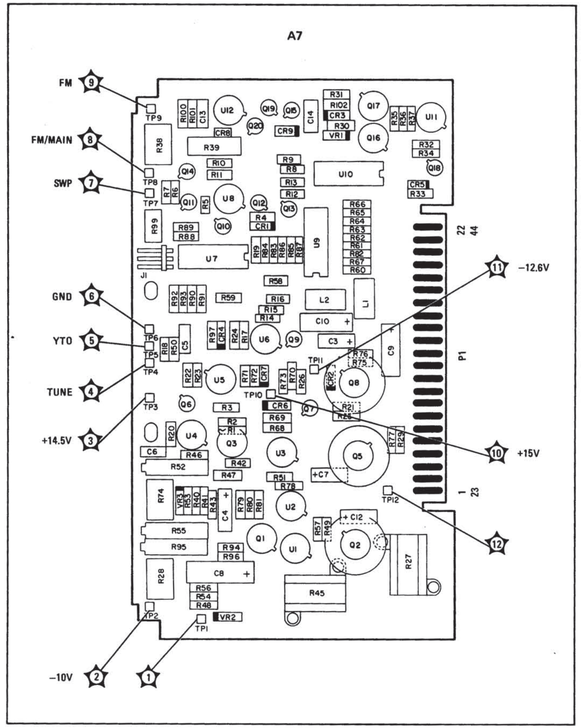

FIGURE 8-28. FREQUENCY CONTROL ASSEMBLY A7, COMPONENT LOCATIONS (SERIAL PREFIX 2208A)

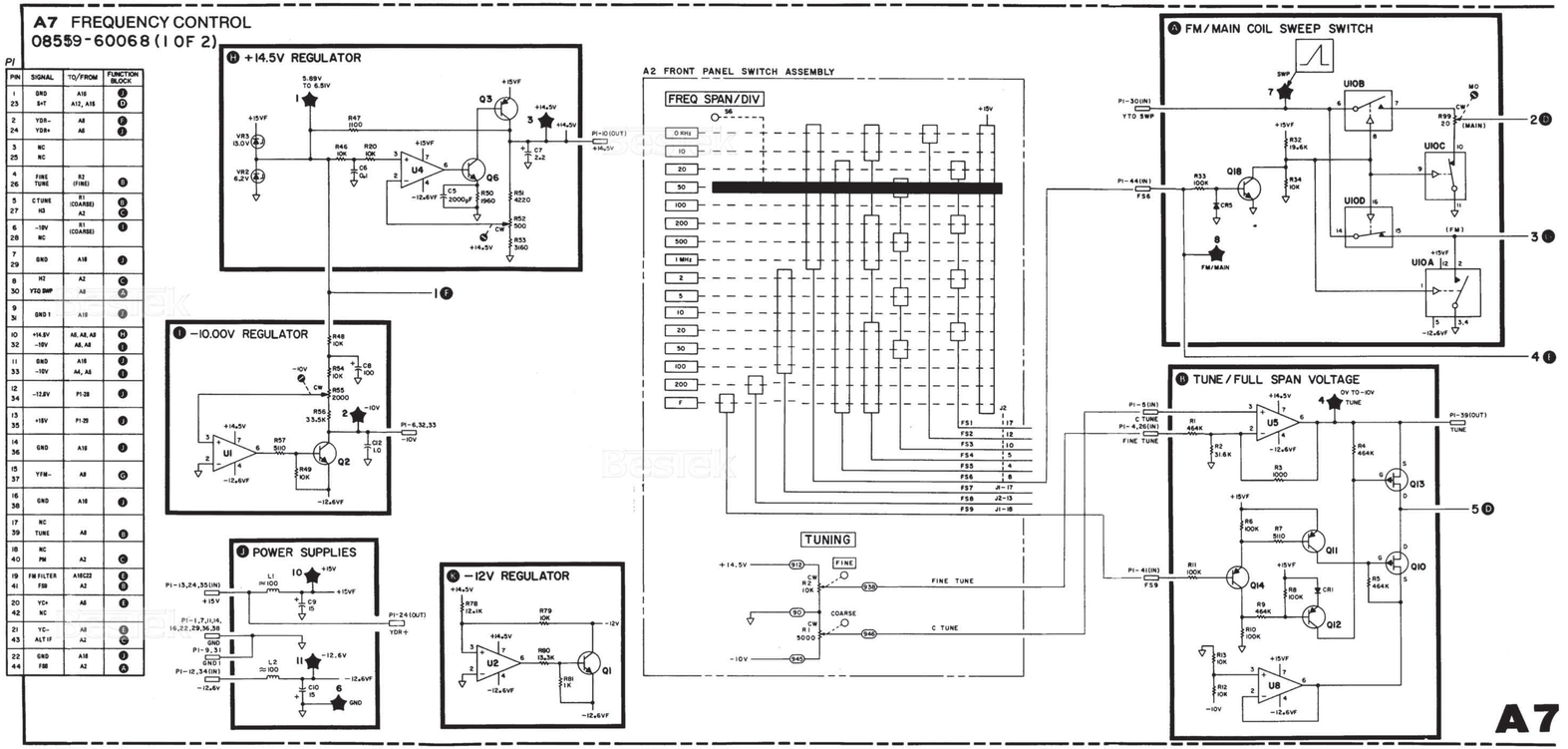

FIGURE 8-29. FREQUENCY CONTROL ASSEMBLY A7, SCHEMATIC DIAGRAM (1 OF 2) (SERIAL PREFIX 2236A)

A7 FREQUENCY CONTROL ASSEMBLY
08559-60068(2 OF 2)

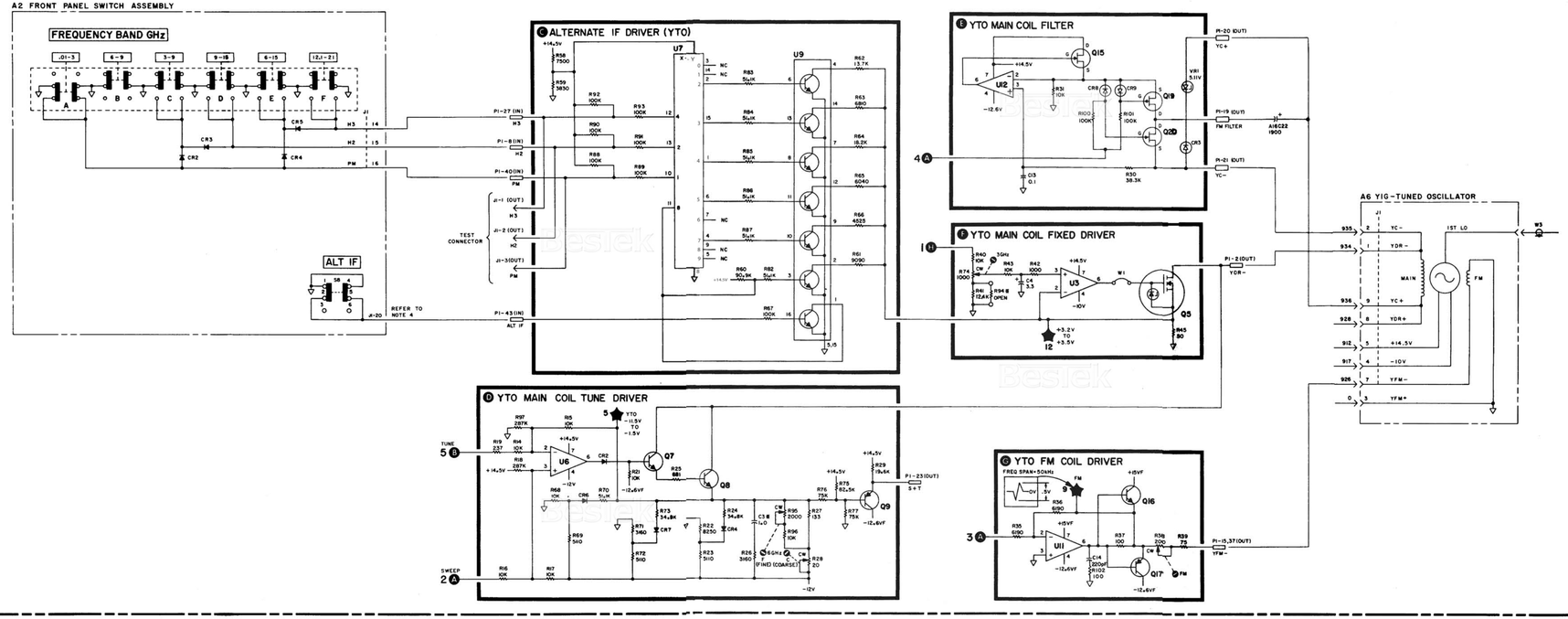

SERIAL PREFIX: 2236A

NOTES:

1. REFERENCE DESIGNATORS WITHIN THIS ASSEMBLY ARE ABBREVIATED. PREFIX ABBREVIATION WITH ASSEMBLY NUMBER FOR COMPLETE REFERENCE DESIGNATOR.
2. UNLESS OTHERWISE INDICATED: RESISTANCE IN OHMS (Ω) CAPACITANCE IN MICROFARADS (μF) INDUCTANCE IN MICROHENRIES (μH)
3. * INDICATES FACTORY SELECTED COMPONENT. VALUE SHOWN IS TYPICAL.
4. PULL-UP RESISTOR. FOR ALT IF LINE IS LOCATED ON A8 MARKER.

5. MNEMONIC TABLE

MNEMONIC	DEFINITION
ALT IF	ALTERNATE IF (LOW= ALT IF=3.0025 GHz)
ATTEN SWP	ATTENUATED SWEEP VOLTAGE
C TUNE	COARSE FREQUENCY TUNE
FINE TUNE	FINE FREQUENCY TUNE
FSS	SELECTS YTO
	FM OR MAIN COIL (+15V-FM COIL)
FSS	SELECTS FULL SPAN OR PER DIVISION. (+15V=FULL SPAN)
H2	SECOND HARMONIC BAND (LOW=TRUE)
H3	THIRD HARMONIC BAND (LOW=TRUE)
PM	SELECTS PLUS OR MINUS HARMONIC CONVERSION
S+T	SWEEP+TUNE VOLTAGE
TUNE	FREQUENCY TUNE VOLTAGE
YC+	YTO MAIN
YC−	COIL FILTER
YDR+	YTO MAIN
YDR−	COIL SIGNAL
YFM−	YTO FM COIL SIGNAL
YTO SWP	YTO SWEEP VOLTAGE

A7

FIGURE 8-29. FREQUENCY CONTROL ASSEMBLY A7, SCHEMATIC DIAGRAM (2 OF 2) (SERIAL PREFIX 2236A)

Pages 8-83 through 8-95/8-96: MARKER ASSEMBLY A8

Table 8-5. Marker Assembly A8, Replaceable Parts

2309A & Below	Change A8 to HP Part Number 08559-60022, Check Digit 8. Delete A8C2. Change A8R13 to HP Part Number 0757-0438, Check Digit 3, RESISTOR 5.11K 1% .125W F TC=0+-100. Change A8R36 to HP Part Number 0757-0466, Check Digit 7, RESISTOR 110K 1%.125W F TC=0+-100. Add A8R82, HP Part Number 0757-0438, Check Digit 3, RESISTOR 5.11K 1% .125W F TC=0+-100. Change A8R108 to HP Part Number 0698-7277, Check Digit 6, RESISTOR 51.1K 1%.125W F TC=0+-100. Delete A8R110. Delete A8R111. Change A8U4 to HP Part Number 1826-1058, Check Digit 8, IC OP AMP OP 8-TO-99 PKG.
2152A & Below	Delete A8CR21. Change A8R33, A8R87 and A8R88 to HP Part Number 0757-0123, Check Digit 3, RESISTOR 34.8K 1%.125W F TC=0+-100. Delete A8R108. Delete A8R109.
1945A00241,249, 258,262,265,277: 1951A00283,286, 288-290,292, 295-300; 2003A & Below	Change A8R34 and A8R62 to HP Part Number 2100-0670, Check Digit 6, RESISTOR-TRMR 10K 10% C SIDE-ADJ 17-TRN. Change A8R39 to HP Part Number 2100-3754, Check Digit 3, RESISTOR-TRMR 1M 10% C SIDE-ADJ 17-TRN. Change A8R40 to HP Part Number 2100-3752, Check Digit 1, RESISTOR-TRMR 500K 10% C SIDE-ADJ 17-TRN. Change A8R61 to HP Part Number 2100-3750, Check Digit 9, RESISTOR-TRMR 20K 10% C SIDE-ADJ 17-TRN. Change A8R94 to A8R94*. Change A8R94* to HP Part Number 0757-0460, Check Digit 1, RESISTOR 61.9K 1%.125W F TC=0+-100.

Figure 8-32, Marker Assembly A8, Component Locations

2309A & Below	Replace Figure 8-32 with new Figure 8-32 (SERIAL PREFIX 2309A) included in this Manual Backdating supplement.
2152A & Below	Make the following changes to new Figure 8-32 (SERIAL PREFIX 2309A): Delete A8CR21, A8R108, and A8R109.

Figure 8-33. Marker Assembly A8, Schematic Diagram (1 of 2)

2309A & Below	Change A8 to HP Part Number 08559-60022. Replace function block (I) of Figure 8-33 with new P/O Figure 8-33 (1 of 2) (SERIAL PREFIX 2309A) included in this Manual Backdating supplement.
2152A & Below	Make the following changes to new Figure 8-33 (1 of 2) (SERIAL PREFIX 2309A): Change R33 to 34.8K. Change R87 and R88 to 34.8K. Delete the +14.5V supply at R108. Delete R108, R109, and CR21. Connect pin 14 to pin 1 of U2A.
2017A & Below	In the edge connector table for P1, change FUNCTION BLOCK entry for pin 10, -10V, to NC.

Figure 8-33. Marker Assembly A8, Schematic Diagram (2 of 2)

2309A & Below	Change A8 to HP Part Number 08559-60022. Replace right half of function block (E) of Figure 8-33 with new P/O Figure 8-33 (2 of 2) (SERIAL PREFIX 2309A) included in this Manual Backdating supplement.
2017A & Below	In function block (D), change -10V to -12.6V at the wiper of R61 and at pin 4 of U15.
1945A00241,249, 258,262,265,277; 1951A00283,286, 288-290,292, 295-300; 2003A & Below	Make the following changes in function block (E): Change R34 to 10K. Change R62 to 10K. Change R94* to 61.9K.

A8
MARKER

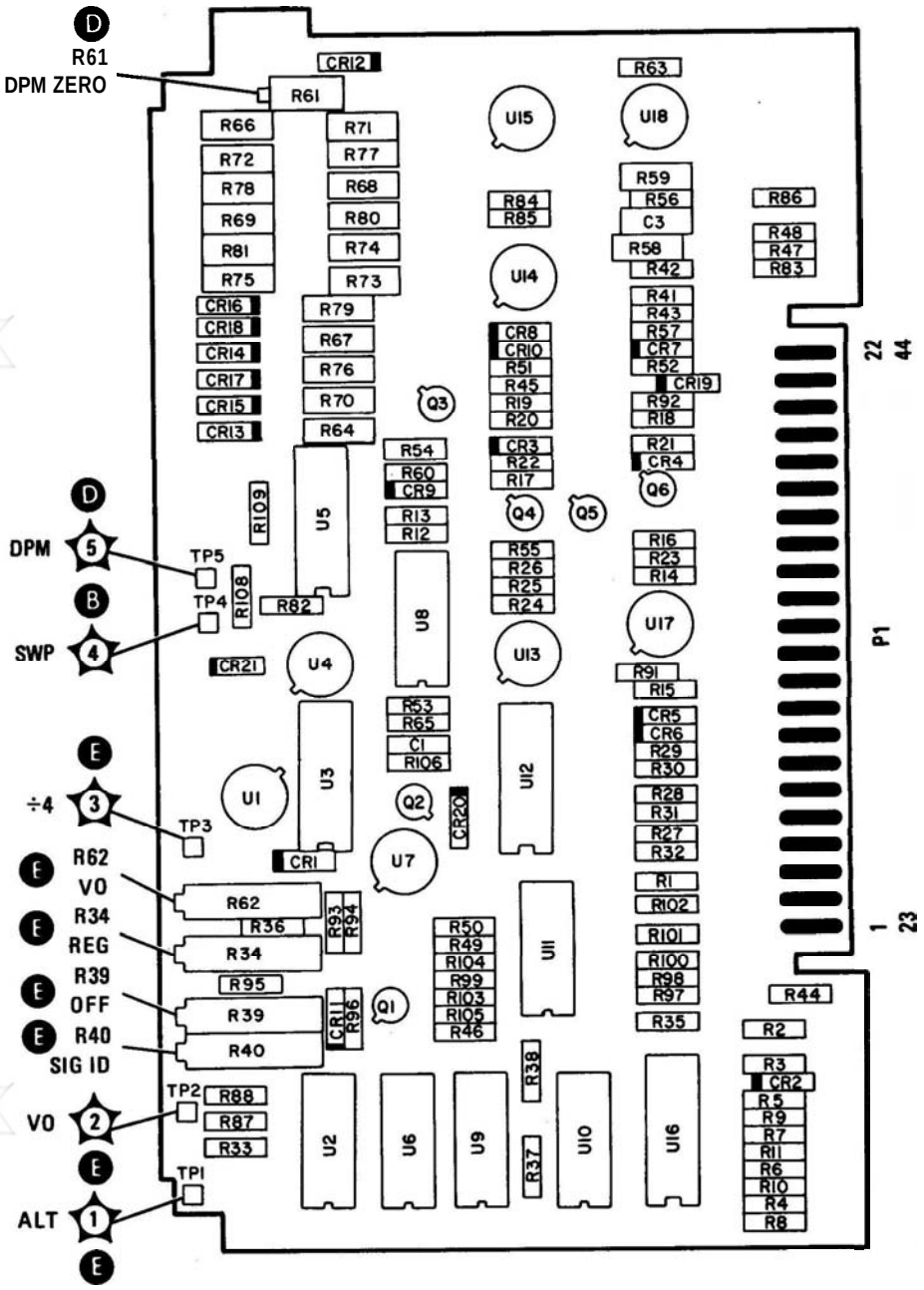

FIGURE 8-32. MARKER ASSEMBLY A8, COMPONENT LOCATIONS (SERIAL PREFIX 2309A)

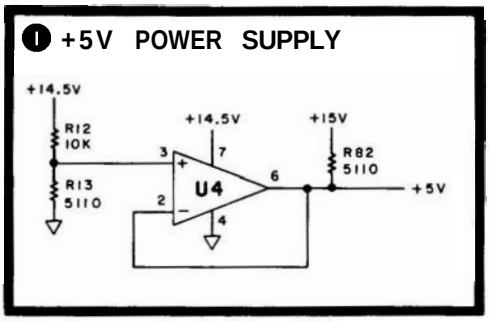

P/O FIGURE 8-33. MARKER ASSEMBLY A8, SCHEMATIC DIAGRAM (1 OF 2) (SERIAL PREFIX 2309A)

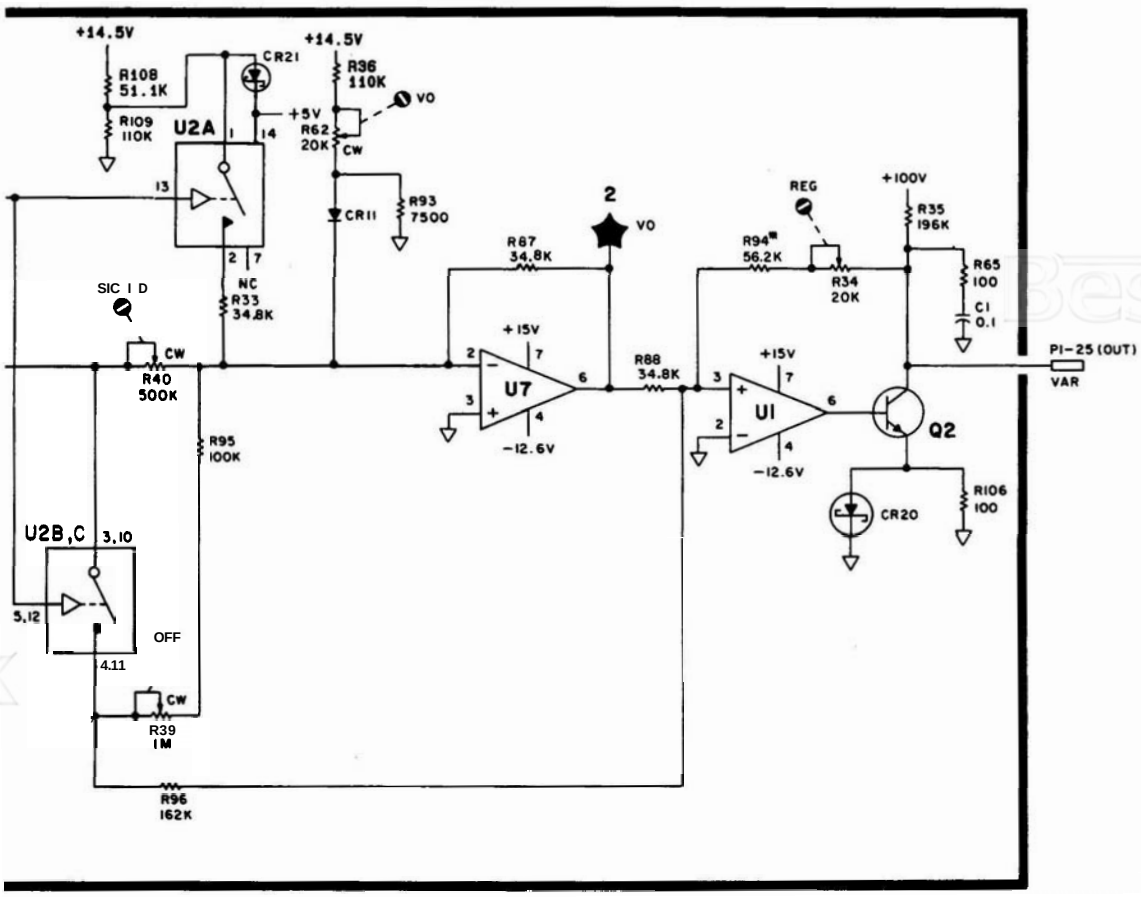

P/O FIGURE 8-33. MARKER ASSEMBLY A8, SCHEMATIC DIAGRAM (2 OF 2) (SERIAL PREFIX 2309A)

Pages 8-97 through 8-115/8-116: SWEEP GENERATOR/BANDWIDTH CONTROL ASSEMBLY A9

Table 8-6. Sweep Generator/Bandwidth Control Assembly A9, Replaceable Parts

2236A & Below

Change **A9** to HP Part Number **08559-60074,** Check Digit **0.**
Change **A9C24** to HP Part Number 0160-2055, Check Digit 9, CAPACITOR-FXD **.01UF +80-20% 100VDC** CER.
Change **A9C26** to HP Part Number 0160-0153, Check Digit 4, CAPACITOR-FXD **1000PF +-10% 200VDC POLYE.**
Change **A9R70, A9R73,** and **A9R81** to HP Part Number **0698-7794,** Check Digit 2, RESISTOR **10K .25% .12W.**
Change **A9R83** to HP Part Number **0698-8322,** Check Digit 4, RESISTOR 111 OHM **.25% .12W.**
Change **A9R120*** to HP Part Number **0698-3153,** Check Digit 9, RESISTOR **3.83K** 1%**.12W.**
Under Miscellaneous Parts, delete HP Part Number 1200-0173.

2203A & Below

Change **A9** to HP Part Number 08559-60071, Check Digit 7.
Delete **A9CR29, A9Q56, A9R106, A9R123,** and **A9R124.**
Change **A9Q29** to HP Part Number **1855-0062,** Check Digit 8, TRANSISTOR J-FET **N-CHAN D-MODE SI.**
Change **A9R88** and **A9R89** to HP Part Number **0757-0465,** Check Digit 6, RESISTOR **100K** 1%**.125W** F **TC=0+-100.**
Change **A9R95** to HP Part Number **0757-0470,** Check Digit 3, RESISTOR 162K 1%**.125W** F **TC=0+-100.**
Change **A9R96** to HP Part Number **0757-0467,** Check Digit 8, RESISTOR 121K 1%**.125W** F **TC=0+-100.**

2107A01633 & Below

Replace Table 8-6 with new Table 8-6 (SERIAL PREFIX **2107A01633)** included in this Manual Backdating supplement.

Figure 8-39. Sweep Generator/Bandwidth Control Assembly A9, Component Locations

2203A & Below

Replace Figure 8-39 with new Figure 8-39 (SERIAL PREFIX **2203A)** included in this Manual Backdating supplement.

2107A01633 & Below

Replace Figure 8-39 with new Figure 8-39 (SERIAL PREFIX **2107A01633)** included in this Manual Backdating supplement.

Figure 8-40. Sweep **Generator/Bandwidth Control Assembly A9, Schematic Diagram (1 of 2)**

2236A & Below

Change A9 to HP Part Number **08559-60074.**

2203A & Below

Change **A9** to HP Part Number 08559-60071.
In function block **(O),** change R88 and R89 to **100K.**
Replace function blocks **(L), (M),** and **(N)** with P/O Figure **8-** 40 **(2** of **2)** (SERIAL PREFIX **2203A)** included in this Manual Backdating supplement.

2107A01633 & Below

Replace Figure 8-40 **(1** of **2)** with new Figure 8-40 **(1** of **2)** (SERIAL PREFIX **2107A01633)** included in this Manual Backdating supplement.
In function block **(F),** add a numeral 1 next to the ground symbol at the collector of **Q5.**

Figure 8-40. Sweep Generator/Bandwidth Control Assembly A9, Schematic Diagram (2 of 2)

2236A & Below	Change A9 to HP Part Number 08559-60074. Change the following in function block **(A):** C26 to **.001UF.** **R120*** to 3830. Change the following in function block (0): R83 to 111. Add a **"1"** next to the ground symbol at the source of **Q23,** 425, **Q29,** and at the emitter of 448.
2203A & Below	Change A9 to HP Part Number 08559-60071. In function block (C), delete **R106.** In function block **(D),** change R95 to 162K and R96 to **121K.**
2107A01633 & Below	Replace Figure 8-40 **(2** of **2)** with new Figure 8-40 **(2** of **2)** (SERIAL PREFIX **2107A01633)** included in this Manual Backdating supplement.

TABLE 86. SWEEP GENERATOR/BANDWIDTH CONTROL ASSEMBLY A9, REPLACEABLE PARTS (1 OF 4) (SERIAL PREFIX 2107A01633)

Reference Designation	HP Part Number	CD	Qty	Description	Mfr Code	Mfr Part Number
A9	08559-60023	9	1	WEEP GENERATOR/BANDWIDTH CONTROL	28480	08559-60023
A9C1	0180-0197	8	5	CAPACITOR-FXD 2.2UF+-10% 20VDC TA	56289	150D225X9020A2
A9C2	0160-3456	6	3	CAPACITOR-FXD 1000PF +-10% 1KVDC CER	28480	0160-3456
A9C3	0160-3402	2	1	CAPACITOR-FXD 1UF +-5% 50VDC MET-POLYC	20480	0160-3402
A9C4	0160-3009	5	1	CAPACITOR-FXD 982PF +-1% 100VDC MICA	28480	0160-3009
A9C5	0180-0197	8		CAPACITOR-FXD 2.2UF+-10% 20VDC TA	56289	150D225X9020A2
A9C6	0160-3094	8	2	CAPACITOR-FXD .1UF +-10% 100VDC CER	28480	0160-3094
A9C7	0160-3456	6		CAPACITOR-FXD 1000PF +-10% 1KVDC CER	28480	0160-3456
A9C8	0160-3466	8	2	CAPACITOR-FXD 100PF +-10% 1KVDC CER	28480	0160-3466
A9C9	0160-2257	3	1	CAPACITOR-FXD 10PF +-5% 500VDC CER 0+-60	28480	0160-2257
A9C10	0160-2150	5	1	CAPACITOR-FXD 33PF +-5% 300VDC MICA	28480	0160-2150
A9C11	0180-0197	8		CAPACITOR-FXD 2.2UF+-10% 20VDC TA	56289	150D225X9020A2
A9C12	0140-0192	9	1	CAPACITOR-FXD 68PF +-5% 300VDC MICA	72136	DM15E680J030WV1CR
A9C13	0180-0197	8		CAPACITOR-FXD 2.2UF+-10% 20VDC TA	56289	150D225X9020A2
A9C14	0160-4297	5	2	CAPACITOR-FXD .022UF +80-20% 100VDC CER	56289	C023F101H223ZS22-CDH
A9C15	0160-3456	6		CAPACITOR-FXD 1000PF +-10% 1KVDC CFR	28480	0160-3456
A9C16	0160-3094	8		CAPACITOR-FXD .1UF +-10% 100VDC CER	28480	0160-3094
A9C17	0160-3466	8		CAPACITOR-FXD 100PF +-10% 1KVDC CER	28480	0160-3466
A9C18	0160-4297	5		CAPACITOR-FXD .022UF +80-20% 100VDC CER	56289	C023F101H223ZS22-CDH
A9C19	0180-2205	3	1	CAPACITOR-FXD .33UF+-10% 35VDC TA	56289	150D334X9035A2
A9C20	0180-1743	2	1	CAPACITOR-FXD .1UF+-10% 35VDC TA	56289	150D104X9035A2
A9C21	0160-0163	6	1	CAPACITOR-FXD .033UF +-10% ZOOVDC POLYE	28480	0160-0163
A9C22	0160-2055	9	1	CAPACITOR-FXD .01UF +80-20% 1ODVDC CER	28480	0160-2055
A9C23	0160-0155	6	1	CAPACITOR-FXD 3300PF +-10% 200VDC POLYE	28480	0160-0155
A9C24	0160-0153	4	1	CAPACITOR-FXD 1000PF +-10% 200VDC POLYE	28480	0160-0153
A9C25	0160-0134	1	1	CAPACITOR-FXD 220PF +-5% 300VDC MICA	28480	0160-0134
A9C26	0180-0197	8		CAPACITOR-FXD 2.2UF+-10% 20VDC TA	56289	150D225X9020A2
A9C27	0170-0066	9	1	CAPACITOR-FXD .027UF +-10% 200VDC POLYE	28480	0170-0066
A9CR1	1901-0050	3	23	DIODE-SWITCHING 80V 200MA 2NS DO-35	28480	1901-0050
A9CR2	1901-0050	3		DIODE-SWITCHING 80V 200MA 2NS DO-35	28400	1901-0050
A9CR3	1901-0050	3		DIODE-SUITCHING 80V 200MA 2NS DO-35	28480	1901-0050
A9CR4	1901-0050	3		DIODE-SUITCHING 80V 200MA 2NS DO-35	28480	1901-0050
A9CR5	1901-0376	6	1	DIODE-GEN PRP 3SV 50MA DO-35	28480	1901-0376
A9CR6	1901-0050	3		DIODE-SUITCHING 80V 200MA 2NS DO-35	28480	1901-0050
A9CR7	1901-0050	3		DIODE-SUITCHING 80V 200MA 2NS DO-35	28480	1901-0050
A9CR8	1901-0050	3		DIODE-SWITCHING 80V 200MA 2NS DO-35	28480	1901-0050
A9CR9	1901-0050	3		DIODE-SWITCHING 80V 200MA 2NS DO-35	28480	1901-0050
A9CR10	1901-0050	3		DIODE-SWITCHING 80V 200MA 2NS DO-35	28480	1901-0050
A9CR11	1901-0050	3		DIODE-SUITCHING 80V 200MA 2NS DO-35	28480	1901-0050
A9CR12	1901-0050	3		DIODE-SUITCHING 80V 200MA 2NS DO-35	28480	1901-0050
A9CR13	1901-0050	3		DIODE-DUITCHING 80V 200MA 2NS DO-35	28480	1901-0050
A9CR14	1901-0050	3		DIODE-SWITCHING 80V 200MA 2NS DO-35	28480	1901-0050
A9CR15	1901-0050	3		DIODE-SUITCHING 80V 200MA 2NS DO-35	28480	1901-0050
A9CR16	1901-0050	3		DIODE-SUITCHING 80V 200MA 2NS DO-35	28480	1901-0050
A9CR17	1901-0050	3		DIODE-WITCHING 80V 200MA 2NS DO-35	28480	1901-0050
A9CR18	1901-0050	3		DIODE-SUITCHING 80V 200MA 2NS DO-35	28480	1901-0050
A9CR19	1901-0050	3		DIODE-SWITCHING 80V 200MA CNS DO-35	28480	1901-0050
A9CR20	1901-0050	3		DIODE-SUITCHING 80V 200MA 2N0 DO-35	28480	1901-0050
A9CR21	1901-0050	3		DIODE-SWITCHING 80V 200MA 2N3 DO-35	28480	1901-0050
A9CR22	1901-0050	3		DIODE-BYITCHING 80V 200MA 2NS DO-35	28480	1901-0050
A9CR23	1901-0050	3		DIODE-SWITCHING 80V 200MA 2NS DO-35	28480	1901-0050
A9CR24	1901-0050	3		DIODE-SUITCHING 80V 200MA 2NS DO-35	28480	1901-0050
A9CR25	1901-0539	3	1	DIODE-SM SIG SCHOTTKY	28480	1901-0539
A9MP1	7100-0699	4	1	OSCILLATOR SHIELD	28480	7100-0699
	1205-0202	1	1	THERMAL LINK DUAL TO-18-CS	28480	1205-0202
A9MP2	0403-0826	6	1	PLUG-HOLE BDR-HD FOR .187-D-HOLE NYL	02768	207-129241-03-0101
A9Q1	1854-0071	7	16	TRANSISTOR NPN SI PD=300MW FT=200MHZ	28480	1854-0071
A9Q2	1855-0082	2	7	TRANSISTOR J-FET P-CHAN D-MODE 81	28480	1855-0082
A9Q3	1855-0082	2		TRANSISTOR J-FET P-CHAN D-MOM SI	28480	1855-0082
A9Q4	1853-0007	7	2	TRANSISTOR PNP 213251 SI TO-18 PD=360MW	04713	2N3251
A9Q5	1853-0020	4	4	TRANSISTOR PNP SI PD=300MW FT=150MHZ	28480	1853-0020
A9Q6	1854-0071	7		TRANSISTOR NPN SI PD=300MW FT=200MHZ	28480	1854-0071
A9Q7	1853-0007	7		TRANSISTOR P W 2N3251 SI TO-18 PD=360MW	04713	2N3251
A9Q8	1854-0071	7		TRANSISTOR NPN SI PD=300MW FT=200MHZ	28480	1854-0071
A9Q9	1854-0071	7		TRANSISTOR NPN SI PD=300MW FT=200MHZ	28480	1054-0071
A9Q10	1854-0404	0	14	TRANSISTOR NPN SI TO-18 PD=360MW	28480	1854-0404
A9Q11	1855-0417	7	2	TRANSISTOR J-FET N-CHAN D-HODE TO-18 SI	28480	1855-0417
A9Q12	1853-0020	4		TRANSISTOR PNP SI PD=300MW FT=150MHZ	28480	1853-0020
A9Q13	1854-0404	0		TRANSISTOR NPN 31 TO-18 PD=360MW	28480	1854-0404
A9Q14	1854-0404	0		TRANSISTOR NPN SI TO-18 PD=360MW	28480	1854-0404
A9Q15	1854-0404	0		TRANSISTOR NPN SI TO-18 PD=360MW	28480	1854-0404

See introduction to this section for ordering information
*Indicates factory selected value

TABLE 8-6. SWEEP GENERATOR/BANDWIDTH CONTROL ASSEMBLY A9, REPLACEABLE PARTS (2 OF 4) (SERIAL PREFIX 2107A01633)

Reference Designation	HP Part Number	C D	Qty	Description	Mfr Code	Mfr Part Number
A9Q16	1854-0019	3	8	TRANSISTOR NPN SI TO-18 PD=360MW	28480	1854-0019
A9Q17	1854-0404	0		TRANSISTOR NPN SI TO-18 PD=360MW	28480	1854-0404
A9Q18	1854-0019	3		TRANSISTOR NPN SI TO-18 PD=360MW	28480	1854-0019
A9Q19	1854-0404	0		TRANSISTOR NPN SI TO-18 PD=360MW	28480	1854-0404
A9Q20	1854-0404	0		TRANSISTOR NPN SI TO-18 PD=360MW	28480	1854-0404
A9Q21	1854-0404	0		TRANSISTOR NPN SI TO-18 PD=360MW	28480	1854-0404
A9Q22	1854-0404	0		TRANSISTOR NPN SI TO-18 PD=360MW	28480	1854-0404
A9Q23	1854-0404	0		TRANSISTOR NPN SI TO-18 PD=360MW	28480	1854-0404
A9Q24	1854-0019	3		TRANSISTOR NPN SI TO-18 PD=360MW	28480	1854-0019
A9Q25	1855-0082	2		TRANSISTOR J-FET P-CHAN D-MODE SI	28480	1855-0082
A9Q26	1855-0082	2		TRANSISTOR J-FET P-CHAN D-MODE SI	28480	1855-0082
A9Q27	1855-0082	2		TRANSISTOR J-FET P-CHAN D-MODE SI	28480	1855-0082
A9Q28	1855-0082	2		TRANSISTOR J-FET P-CHAN D-MODE SI	28480	1855-0082
A9Q29	1855-0062	8	1	TRANSISTOR J-FET N-CHAN D-MODE SI	28480	1855-0062
A9Q30	1855-0082	2		TRANSISTOR J-FET P-CHAN D-MODE SI	28480	1855-0082
A9Q31	1854-0071	7		TRANSISTOR NPN SI PD=300MW FT=200MHZ	28480	1854-0071
A9Q32	1854-0071	7		TRANSISTOR NPN SI PD=300MW FT=200MHZ	28480	1854-0071
A9Q33	1854-0071	7		TRANSISTOR NPN SI PD=300MW FT=200MHZ	28480	1854-0071
A9Q34	1854-0071	7		TRANSISTOR NPN SI PD=300MW FT=200MHZ	28480	1854-0071
A9Q35	1854-0071	7		TRANSISTOR NPN SI PD=300MW FT=200MHZ	28480	1854-0071
A9Q36	1854-0071	7		TRANSISTOR NPN SI PD=300MW FT=200MHZ	28480	1854-0071
A9Q37	1853-0020	4		TRANSISTOR PNP SI PD=300MW FT=150MHZ	28480	1853-0020
A9Q38	1854-0071	7		TRANSISTOR NPN SI PD=300MW FT=200MHZ	28480	1854-0071
A9Q39	1854-0071	7		TRANSISTOR NPN SI PD=300MW FT=200MHZ	28480	1854-0071
A9Q40	1854-0071	7		TRANSISTOR NPN SI PD=300MW FT=200MHZ	28480	1854-0071
A9Q41	1854-0019	3		TRANSISTOR NPN SI TO-18 PD=360MW	28480	1854-0019
A9Q42	1854-0404	0		TRANSISTOR NPN SI TO-18 PD=360MW	28480	1854-0404
A9Q43	1854-0019	3		TRANSISTOR NPN SI TO-18 PD=360MW	28480	1854-0019
A9Q44	1854-0404	0		TRANSISTOR NPN SI TO-18 PD=360MW	28480	1854-0404
A9Q45	1854-0019	3		TRANSISTOR NPN SI TO-18 PD=360MW	28480	1854-0019
A9Q46	1854-0019	3		TRANSISTOR NPN SI TO-18 PD=360MW	28480	1854-0019
A9Q47	1854-0019	3		TRANSISTOR NPN SI TO-18 PD=360MW	28480	1854-0019
A9Q48	1854-0404	0		TRANSISTOR NPN SI TO-18 PD=360MW	28480	1854-0404
A9Q49	1854-0404	0		TRANSISTOR NPN SI TO-18 PD=360MW	28480	1854-0404
A9Q50	1853-0020	4		TRANSISTOR PNP SI PD=300MW FT=150MHZ	28480	1853-0020
A9Q51	1854-0071	7		TRANSISTOR NPN SI PD=300MW FT=200MHZ	28480	1854-0071
A9Q52	1855-0417	7		TRANSISTOR J-FET N-CHAN D-MODE TO-18 SI	28480	1855-0417
A9Q53	1854-0071	7		TRANSISTOR NPN SI PD=300MW FT=200MHZ	28480	1854-0071
A9Q54	1854-0071	7		TRANSISTOR NPN SI PD=300MW FT=200MHZ	28480	1854-0071
A9R1	0698-3458	9	1	RESISTOR 42.2K 1% .125W F TC=0+-100	24546	C4-1/8-T0-4222-F
A9R2	2100-3154	7	1	RESISTOR-TRMR 1K 10% C SIDE-ADJ 17-TRN	02111	43P102
A9R3	0757-0279	0	4	RESISTOR 3.16K 1% .125W F TC=0+-100	24546	C4-1/8-T0-3161-F
A9R4	0757-0419	0	1	RESISTOR 681 1% .125W F TC=0+-100	24546	C4-1/8-T0-681R-F
A9R5	0757-0459	8	3	RESISTOR 56.2K 1% .125W F TC=0+-100	24546	C4-1/8-T0-5622-F
A9R6	0698-3152	8	1	RESISTOR 3.48K 1% .125W F TC=0+-100	24546	C4-1/8-T0-3481-F
A9R7	0757-0442	9	19	RESISTOR 10K 1% .125W F TC=0+-100	24546	C4-1/8-T0-1002-F
A9R8	0757-0442	9		RESISTOR 10K 1% .125W F TC=0+-100	24546	C4-1/8-T0-1002-F
A9R9	0757-0444	1	2	RESISTOR 12.1K 1% .125W F TC=0+-100	24546	C4-1/8-T0-1212-F
A9R10	2100-3199	2	1	RESISTOR-TRMR 2K 10% C SIDE-ADJ 17-TRN	02111	43P202
A9R11	0698-3457	6	2	RESISTOR 316K 1% .125W F TC=0+-100	28480	0698-3457
A9R12	0698-3442	9	1	RESISTOR 237 1% .125W F TC=0+-100	24546	C4-1/8-T0-237R-F
A9R13	2100-3052	4	1	RESISTOR-TRMR 50 10% C SIDE-ADJ 17-TRN	02111	43P500
A9R14	0698-3446	3	1	RESISTOR 383 1% .125W F TC=0+-100	24546	C4-1/8-T0-383R-F
A9R15	0757-0424	7	1	RESISTOR 1.1K 1% .125W F TC=0+-100	24546	C4-1/8-T0-1101-F
A9R16	0698-7412	1	3	RESISTOR 13.3K .25% .125W F TC=0+-100	19701	MF4C1/8-T0-1332-C
A9R17	0757-0442	9		RESISTOR 10K 1% .125W F TC=0+-100	24546	C4-1/8-T0-1002-F
A9R18	0757-0458	7	2	RESISTOR 51.1K 1% .125W F TC=0+-100	24546	C4-1/8-T0-5112-F
A9R19	0757-0465	6	9	RESISTOR 100K 1% .125W F TC=0+-100	24546	C4-1/8-T0-1003-F
A9R20	0757-0465	6		RESISTOR 100K 1% .125W F TC=0+-100	24546	C4-1/8-T0-1003-F
A9R21	0757-0279	0		RESISTOR 3.16K 1% .125W F TC=0+-100	24546	C4-1/8-T0-3161-F
A9R22	0757-0280	3	1	RESISTOR 1K 1% .125W F TC=0+-100	24546	C4-1/8-T0-1001-F
A9R23	0698-3444	1	1	RESISTOR 316 1% .125W F TC=0+-100	24546	C4-1/8-T0-316R-F
A9R24	0698-6360	6	2	RESISTOR 10K .1% .125W F TC=0+-25	28480	0698-6360
A9R25	0698-3934	4	1	RESISTOR 42.18K .1% .125W F TC=0+-25	28480	0698-3934
A9R26	0698-7794	2	6	RESISTOR 10K .25% .125W F TC=0+-100	19701	MF4C1/8-T0-1002-C
A9R27	0683-3355	2	3	RESISTOR 3.3M 5% .25W FC TC=-900/+1100	01121	CB3355
A9R28	0683-3355	2		RESISTOR 3.3M 5% .25W FC TC=-900/+1100	01121	CB3355
A9R29	0698-6360	6		RESISTOR 10K .1% .125W F TC=0+-25	28480	0698-6360
A9R30	0698-3935	5	1	RESISTOR 4.946K .1% .125W F TC=0+-25	28480	0698-3935
A9R31	0757-0442	9		RESISTOR 10K 1% .125W F TC=0+-100	24546	C4-1/8-T0-1002-F
A9R32	0698-3160	8	3	RESISTOR 31.6K 1% .125W F TC=0+-100	24546	C4-1/8-T0-3162-F
A9R33	0698-3260	9	2	RESISTOR 464K 1% .125W F TC=0+-100	28480	0698-3260
A9R34	0698-3160	8		RESISTOR 31.6K 1% .125W F TC=0+-100	24546	C4-1/8-T0-3162-F
A9R35	0698-4037	0	2	RESISTOR 46.4 1% .125W F TC=0+-100	24546	C4-1/8-T0-46R4-F

See introduction to this section for ordering information
*Indicates factory selected value

TABLE 8-6. SWEEP GENERATOR/BANDWIDTH CONTROL ASSEMBLY A9, REPLACEABLE PARTS (3 OF 4) (SERIAL PREFIX 2107A01633)

Reference Designation	HP Part Number	CD	Qty	Description	Mfr Code	Mfr Part Number
A9R36	0698-4037	0		RESISTOR 46.4 1% .125W F TC=0+-100	24546	C4-1/8-T0-46R4-F
A9R37	0683-6845	1	1	RESISTOR 680K 5% .25W FC TC=-800/+900	01121	CB6845
A9R38	0698-3457	6		RESISTOR 316K 1% .125W F TC=0+-100	28480	0698-3457
A9R39	0757-0439	4	3	RESISTOR 6.81K 1% .125W F TC=0+-100	24546	C4-1/8-T0-6811-F
A9R40	0698-3451	0	2	RESISTOR 133K 1% .125W F TC=0+-100	24546	C4-1/8-T0-1333-F
A9R41	0757-0459	8		RESISTOR 56.2K 1% .125W F TC=0+-100	24546	C4-1/8-T0-5622-F
A9R42	0698-7421	2	3	RESISTOR 40K .25% .125W F TC=0+-100	19701	MF4C1/8-T0-4002-C
A9R43	0698-3194	8	3	RESISTOR 20K .25% .125W F TC=0+-50	03888	PME55-1/8-T2-2002-C
A9R44	0698-7794	2		RESISTOR 10K .25% .125W F TC=0+-100	19701	MF4C1/8-T0-1002-C
A9R45	0757-0289	2	2	RESISTOR 13.3K 1% .125W F TC=0+-100	19701	MF4C1/8-T0-1332-F
A9R46	0757-0199	3	19	RESISTOR 21.5K 1% .125W F TC=0+-100	24546	C4-1/8-T0-2152-F
A9R47	0757-0346	2	2	RESISTOR 10 1% .125W F TC=0+-100	24546	C4-1/8-T0-10R0-F
A9R48	0757-0465	6		RESISTOR 100K 1% .125W F TC=0+-100	24546	C4-1/8-T0-1003-F
A9R49	0757-0464	5	1	RESISTOR 90.9K 1% .125W F TC=0+-100	24546	C4-1/8-T0-9092-F
A9R50	0757-0442	9		RESISTOR 10K 1% .125W F TC=0+-100	24546	C4-1/8-T0-1002-F
A9R51	0757-0279	0		RESISTOR 3.16K 1% .125W F TC=0+-100	24546	C4-1/8-T0-3161-F
A9R52	0757-0439	4		RESISTOR 6.81K 1% .125W F TC=0+-100	24546	C4-1/8-T0-6811-F
A9R53	0757-0460	1	2	RESISTOR 61.9K 1% .125W F TC=0+-100	24546	C4-1/8-T0-6192-F
A9R54	0757-0442	9		RESISTOR 10K 1% .125W F TC=0+-100	24546	C4-1/8-T0-1002-F
A9R55	0757-0442	9		RESISTOR 10K 1% .125W F TC=0+-100	24546	C4-1/8-T0-1002-F
A9R56	0757-0465	6		RESISTOR 100K 1% .125W F TC=0+-100	24546	C4-1/8-T0-1003-F
A9R57	0757-0439	4		RESISTOR 6.81K 1% .125W F TC=0+-100	24546	C4-1/8-T0-6811-F
A9R58	0757-0465	6		RESISTOR 100K 1% .125W F TC=0+-100	24546	C4-1/8-T0-1003-F
A9R59	0757-0279	0		RESISTOR 3.16K 1% .125W F TC=0+-100	24546	C4-1/8-T0-3161-F
A9R60	0698-3160	8		RESISTOR 31.6K 1% .125W F TC=0+-100	24546	C4-1/8-T0-3162-F
A9R61	0757-0465	6		RESISTOR 100K 1% .125W F TC=0+-100	24546	C4-1/8-T0-1003-F
A9R62	0757-0465	6		RESISTOR 100K 1% .125W F TC=0+-100	24546	C4-1/8-T0-1003-F
A9R63	0757-0346	2		RESISTOR 10 1% .125W F TC=0+-100	24546	C4-1/8-T0-10R0-F
A9R64	0757-0199	3		RESISTOR 21.5K 1% .125W F TC=0+-100	24546	C4-1/8-T0-2152-F
A9R65	0757-0199	3		RESISTOR 21.5K 1% .125W F TC=0+-100	24546	C4-1/8-T0-2152-F
A9R66	0757-0199	3		RESISTOR 21.5K 1% .125W F TC=0+-100	24546	C4-1/8-T0-2152-F
A9R67	0757-0199	3		RESISTOR 21.5K 1% .125W F TC=0+-100	24546	C4-1/8-T0-2152-F
A9R68	0698-7412	1		RESISTOR 13.3K .25% .125W F TC=0+-100	19701	MF4C1/8-T0-1332-C
A9R69	0757-1094	9	1	RESISTOR 1.47K 1% .125W F TC=0+-100	24546	C4-1/8-T0-1471-F
A9R70	0757-0199	3		RESISTOR 21.5K 1% .125W F TC=0+-100	24546	C4-1/8-T0-2152-F
A9R71	0757-0199	3		RESISTOR 21.5K 1% .125W F TC=0+-100	24546	C4-1/8-T0-2152-F
A9R72	2100-2858	8	2	RESISTOR-TRMR 10K 10% WW SIDE-ADJ 20-TRN	02660	3810P-103
A9R73	0757-0199	3		RESISTOR 21.5K 1% .125W F TC=0+-100	24546	C4-1/8-T0-2152-F
A9R74	0698-3151	7	1	RESISTOR 2.87K 1% .125W F TC=0+-100	24546	C4-1/8-T0-2871-F
A9R75	0757-0199	3		RESISTOR 21.5K 1% .125W F TC=0+-100	24546	C4-1/8-T0-2152-F
A9R76	0757-0442	9		RESISTOR 10K 1% .125W F TC=0+-100	24546	C4-1/8-T0-1002-F
A9R77	0757-0199	3		RESISTOR 21.5K 1% .125W F TC=0+-100	24546	C4-1/8-T0-2152-F
A9R78	0757-0458	7		RESISTOR 51.1K 1% .125W F TC=0+-100	24546	C4-1/8-T0-5112-F
A9R79	0757-0199	3		RESISTOR 21.5K 1% .125W F TC=0+-100	24546	C4-1/8-T0-2152-F
A9R80	0757-0199	3		RESISTOR 21.5K 1% .125W F TC=0+-100	24546	C4-1/8-T0-2152-F
A9R81	0757-0199	3		RESISTOR 21.5K 1% .125W F TC=0+-100	24546	C4-1/8-T0-2152-F
A9R82	0698-0085	0	1	RESISTOR 2.61K 1% .125W F TC=0+-100	24546	C4-1/8-T0-2611-F
A9R83	0698-3260	9		RESISTOR 464K 1% .125W F TC=0+-100	28480	0698-3260
A9R84	0757-0444	1		RESISTOR 12.1K 1% .125W F TC=0+-100	24546	C4-1/8-T0-1212-F
A9R85	2100-2858	8		RESISTOR-TRMR 10K 10% WW SIDE-ADJ 20-TRN	02660	3810P-103
A9R86	0698-7794	2		RESISTOR 10K .25% .125W F TC=0+-100	19701	MF4C1/8-T0-1002-C
A9R87	0757-0199	3		RESISTOR 21.5K 1% .125W F TC=0+-100	24546	C4-1/8-T0-2152-F
A9R88	0757-0199	3		RESISTOR 21.5K 1% .125W F TC=0+-100	24546	C4-1/8-T0-2152-F
A9R89	0757-0460	1		RESISTOR 61.9K 1% .125W F TC=0+-100	24546	C4-1/8-T0-6192-F
A9R90	0698-7421	2		RESISTOR 40K .25% .125W F TC=0+-100	19701	MF4C1/8-T0-4002-C
A9R91	0757-0199	3		RESISTOR 21.5K 1% .125W F TC=0+-100	24546	C4-1/8-T0-2152-F
A9R92	0757-0289	2		RESISTOR 13.3K 1% .125W F TC=0+-100	19701	MF4C1/8-T0-1332-F
A9R93	0698-3194	8		RESISTOR 20K .25% .125W F TC=0+-50	03888	PME55-1/8-T2-2002-C
A9R94	0757-0199	3		RESISTOR 21.5K 1% .125W F TC=0+-100	24546	C4-1/8-T0-2152-F
A9R95	0698-3153	9	1	RESISTOR 3.83K 1% .125W F TC=0+-100	24546	C4-1/8-T0-3831-F
A9R96	0698-7412	1		RESISTOR 13.3K .25% .125W F TC=0+-100	19701	MF4C1/8-T0-1332-C
A9R97	0757-0199	3		RESISTOR 21.5K 1% .125W F TC=0+-100	24546	C4-1/8-T0-2152-F
A9R98	0757-0442	9		RESISTOR 10K 1% .125W F TC=0+-100	24546	C4-1/8-T0-1002-F
A9R99	0757-0199	3		RESISTOR 21.5K 1% .125W F TC=0+-100	24546	C4-1/8-T0-2152-F
A9R100				NOT ASSIGNED		
A9R101	0698-7794	2		RESISTOR 10K .25% .125W F TC=0+-100	19701	MF4C1/8-T0-1002-C
A9R102				NOT ASSIGNED		
A9R103				NOT ASSIGNED		
A9R104				NOT ASSIGNED		
A9R105				NOT ASSIGNED		
A9R106				NOT ASSIGNED		
A9R107	0757-0442	9		RESISTOR 10K 1% .125W F TC=0+-100	24546	C4-1/8-T0-1002-F
A9R108	0757-0442	9		RESISTOR 10K 1% .125W F TC=0+-100	24546	C4-1/8-T0-1002-F
A9R109	0757-0442	9		RESISTOR 10K 1% .125W F TC=0+-100	24546	C4-1/8-T0-1002-F
A9R110	0698-3451	0		RESISTOR 133K 1% .125W F TC=0+-100	24546	C4-1/8-T0-1333-F

See introduction to this section for ordering information
*Indicates factory selected value

TABLE 8-6. **SWEEP GENERATOR/BANDWIDTH** CONTROL ASSEMBLY **A9,** REPLACEABLE PARTS (4 OF 4) (SERIAL PREFIX **2107A01633**)

Reference Designation	HP Part Number	C D	Qty	Description	Mfr Code	Mfr Part Number
A9R111	0757-0442	9		RESISTOR 10K 1% .125W F TC=0+-100	24546	C4-1/8-T0-1002-F
A9R112	0757-0442	9		RESISTOR 10K 1% .125W F TC=0+-100	24546	C4 1/8-T0-1002-F
A9R113	0698-7794	2		RESISTOR 10k .25% .125W F TC=0+-100	10701	MF4C1/8-T0 1002-C
A9R114	0757-0459	8		RESISTOR 56.2K 1% .125W F TC=0+ 100	24546	C4 1/8-T0-5622-F
A9R115	0757-0442	9		RESISTOR 10K 1% .125W F TC=0+-100	24546	C4-1/8-T0-1002-F
A9R116	0757-0442	9		RESISTOR 10K 1% .125W F TC=0+-100	24546	C4 1/8-T0-1002-F
A9R117	0698-3238	1	1	RESISTOR 2.5K .25% .125W F TC=0+-50	28480	0698-3238
A9R118	0757-0465	6		RESISTOR 100K 1% .125W F TC=0+-100	24546	C4 1/8-T0-1003-F
A9R119	0698-7794	2		RESISTOR 10K .25% .125W F TC=0+-100	19701	MF4C1/8-T0-1002-C
A9R120	0698-6362	8	1	RESISTOR 1K .1% .125W F TC=0+-25	28480	0698-6362
A9R121	0698-8322	4	1	RESISTOR 111 .25% .125W F TC=0+-100	19701	MF4C1/8-T0-111R-C
A9R122	0683-1055	5	2	RESISTOR 1M 5% .25W FC TC=-800/+900	01121	CB1055
A9R123	0683-1055	5		RESISTOR 1M 5% .25W FC TC=-800/+900	01121	CB1055
A9R124	0757-0465	6		RESISTOR 100K 1% .125W F TC=0+-100	24546	C4 1/8-T0-1003-F
A9R125	0757-0461	2	1	RESISTOR 68.1K 1% .125W F TC=0+-100	74596	C4 1/8-T0-6812 F
A9R126	0757-0442	9		RESISTOR 10K 1% .125W F TC=0+-100	24546	C4 1/8-T0-1002-F
A9R127	0698-7421	2		RESISTOR 40K .25% .125W F TC=0+-100	19701	MF4C1/8-T0-4002-C
A9R128	0757-0442	9		RESISTOR 10K 1% .125W F TC=0+-100	74546	C4 1/8-T0-1002-F
A9R129	0698-3194	8		RESISTOR 20K .25% .125W F TC=0+-50	03888	PME55-1/8-T2-2002-C
A9R130	0683-3355	2		RESISTOR 3.3M 5% .25W FC TC=-900/+1100	01121	CB3355
A9R131	0757-0442	9		RESISTOR 10K 1% .125W F TC=0+-100	24546	C4-1/8-T0-1002-F
A9R132	0757-0447	4	1	RESISTOR 16.2K 1% .125W F TC=0+-100	24546	C4-1/8-T0-1622-F
A9TP9	1251-0600	0	9	CONNECTOR-SGL CONT PIN 1.14 MM-BSC-SZ SQ	28480	1251-0600
A9U1	1820-0223	0	1	IC UP AMP LP TO-99 PKG	31585	CA301AT
A9U2	1826-0092	3	1	IC OP AMP GP DUAL TO-99 PKG	28480	1826-0092
A9U3	1826-1058	3	1	IC OP AMP GP O-TO 99 PKG	28480	1826-1058
A9VR1	1902-0025	4	1	DIODE ZNR 10V 5% DO-35 PD .4W TC=+.06%	28480	1902-0025
A9VR2	1902-3139	7	1	DIODE ZNR 8.25V 5% DO 35 PD= 4W	78480	1702-3139
A9VR3	1902-0049	2	1	DIODE-ZNR 6.19V 5% DO-35 PD-.4W	28480	1902-0049
				A9 MISCELLANEOUS PARTS		
	2200-0107	6	1	SCREW-NACH 4-40 ,375-IN-LC PAN-HD-POZI	28480	2200-0107

See introduction to this section for ordering information
***Indicates factory selected value**

A9
SWEEP GENERATOR/BANDWIDTH CONTROL

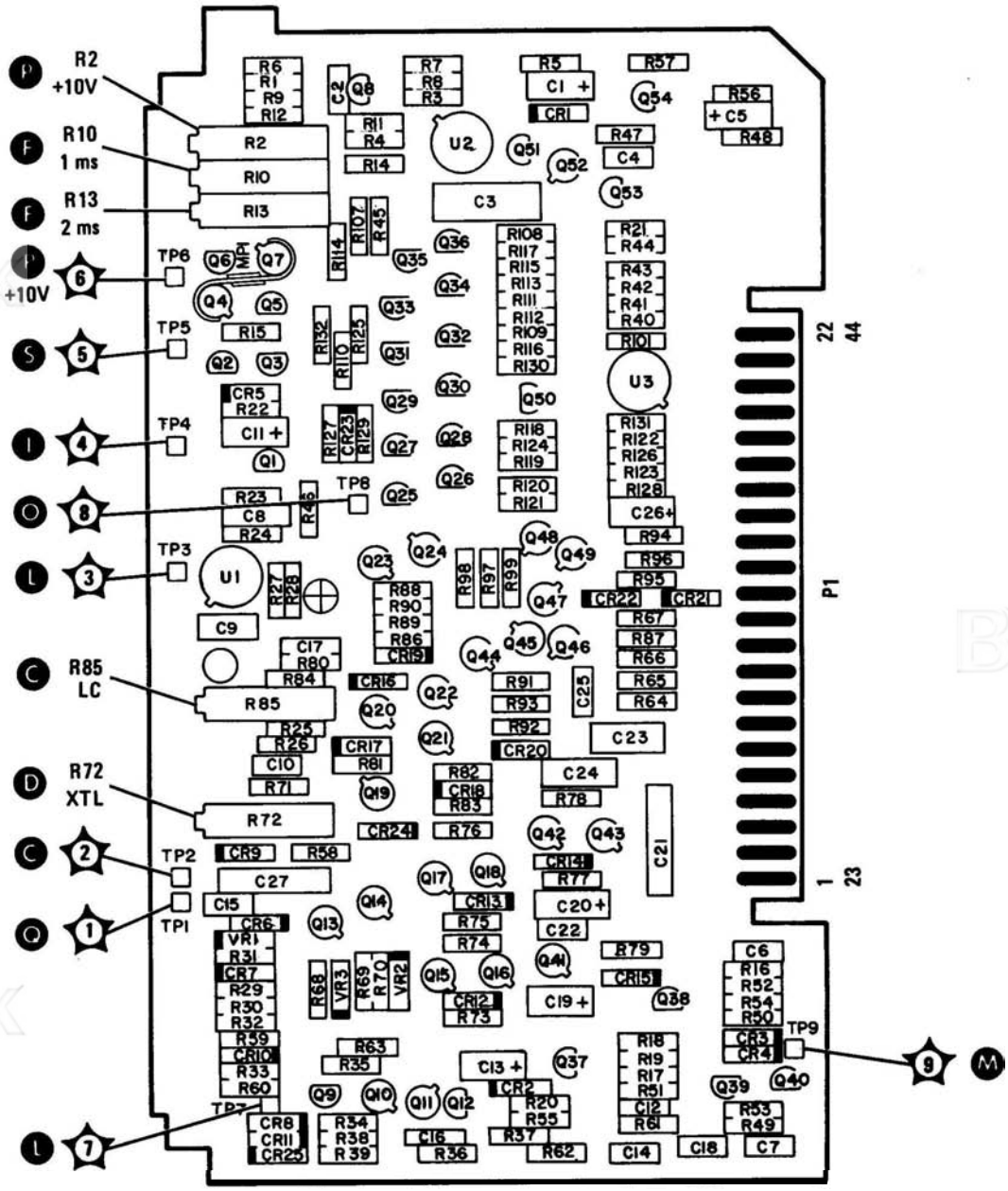

FIGURE 839. SWEEP GENERATOR/BANDWIDTH CONTROL ASSEMBLY A9, COMPONENT LOCATIONS (SERIAL PREFIX 2203A)

A9
SWEEP GENERATOR/BANDWIDTH CONTROL

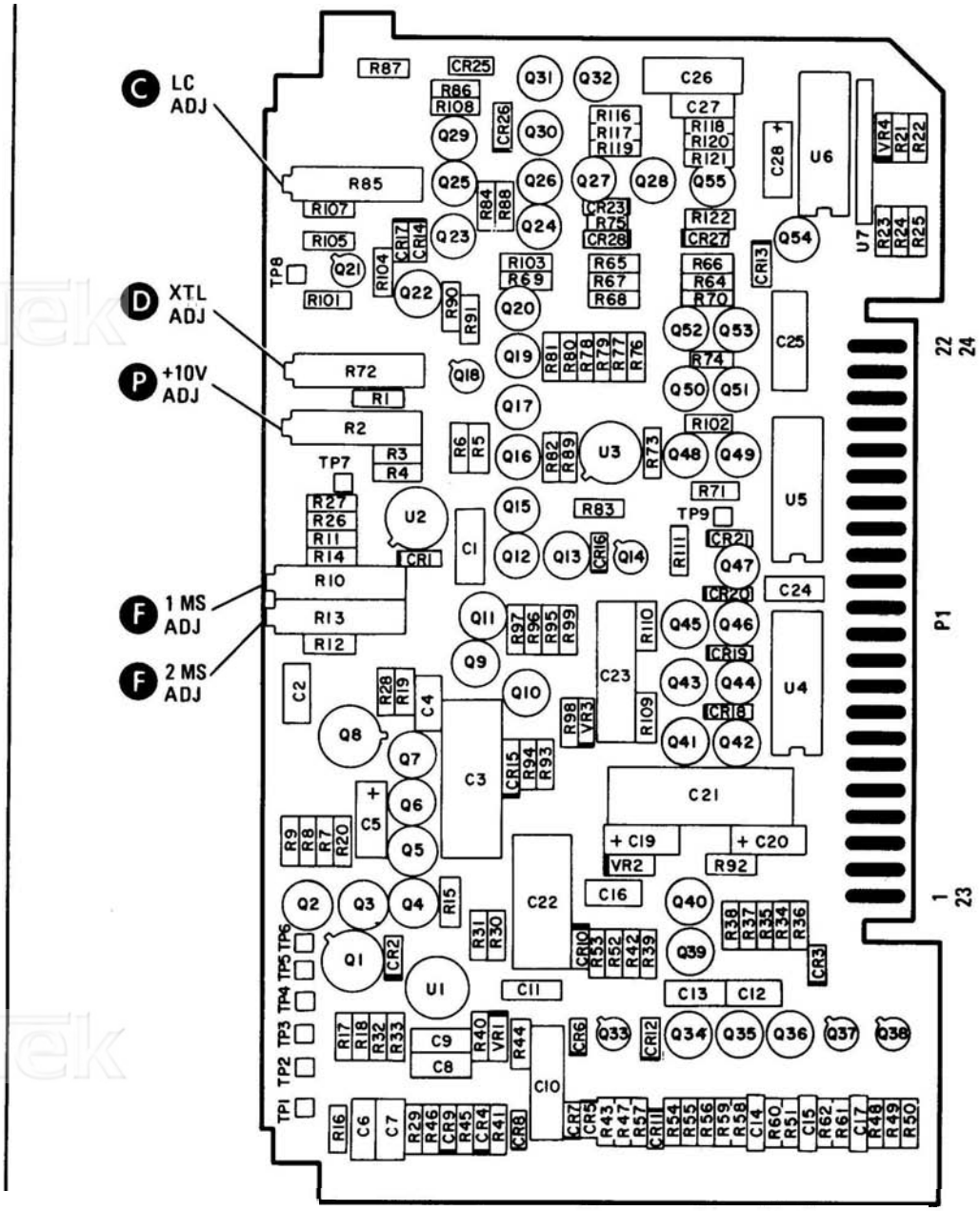

FIGURE 839. SWEEP GENERATOR/BANDWIDTH CONTROL ASSEMBLY A9, COMPONENT LOCATIONS (SERIAL PREFIX 2107A01633)

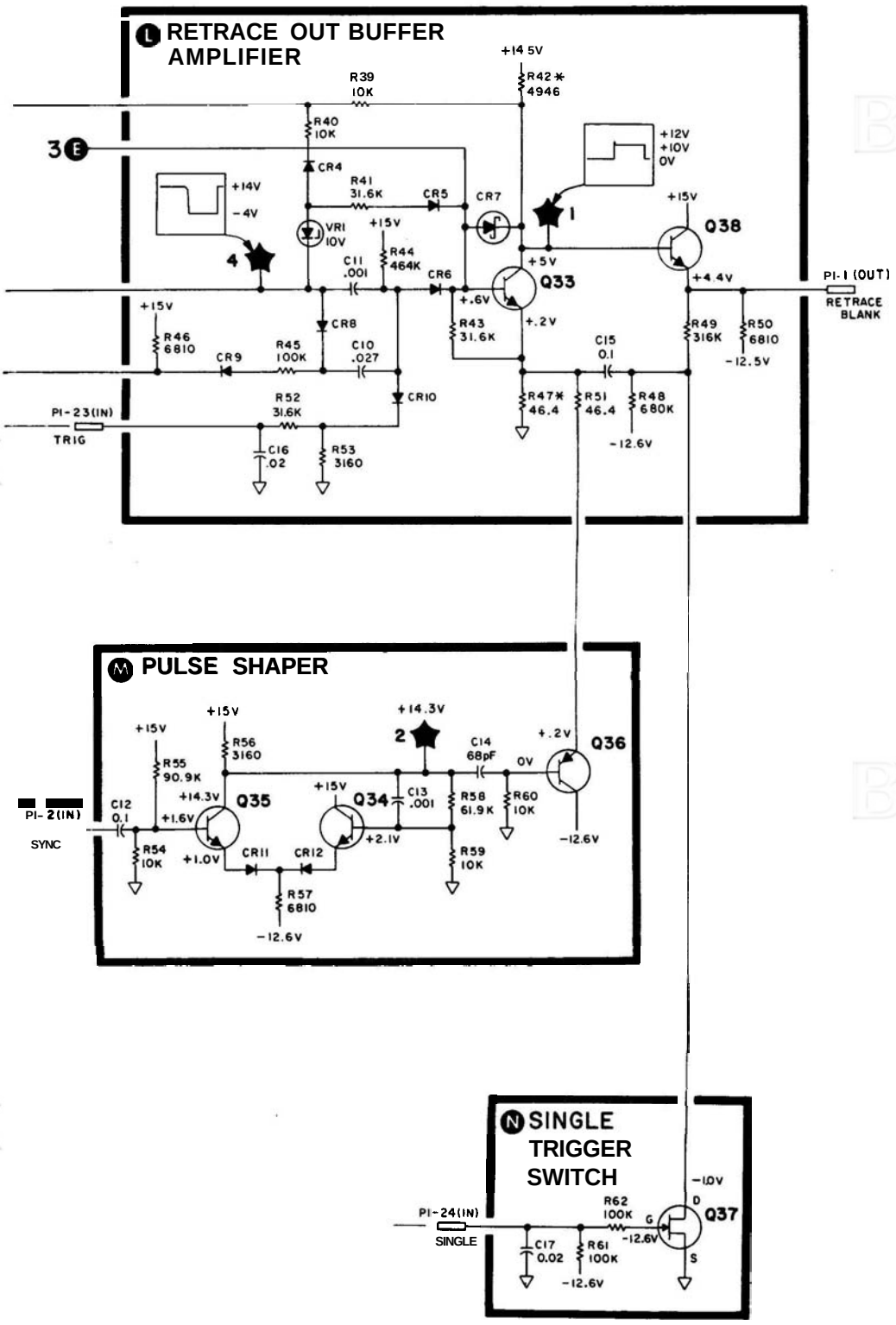

P/O FIGURE 8-40. A9 SWEEP GENERATOR/BANDWIDTH CONTROL, SCHEMATIC DIAGRAM (2 OF 2) (SERIAL PREFIX 2203A)

A9 SWEEP GENERATOR/BANDWIDTH CONTROL
08559-60023 (1 of 2)

P1

PIN	SIGNAL	TO/FROM	FUNCTION BLOCK
1 23	RETRACE TRIG	A8, A15 A2	C N
2 24	SYNC SINGLE	A2 A2	N N
3 25	ST7 MAN SCAN	A2 A2	B B
4 26	VERT -12.6V	A2 P1-28	B C
5 27	GND	A18	C
6 28	+15V	P1-29	C
7 29	+10V	A11, A12, A13	P
8 30	BW1 BW5	A2 A2	A A
9 31	BW2 BW6	A2 A11, A13	A D
10 32	BW3 BW7	A2 A11, A13	A C
11 33	BW4 NOISE MEASURE	A2 A2	A A
12 34	ATTEN SWP VIDEO FILTER	A8 A2	D B
13 35	AST GND 1	A8 A7	A D
14 36	GND FSS	A18 A2	NC D
15 37	FS1 FS4	A2 A2	D D
16 38	FS2 FS4	A2 A2	D D
17 39	FS3 SWEEP	A2 A3P1-40	D D
18 40	ST1 SWEEP	A2 A3P1-39 P1-11	B B
19 41	ST2 +15V	A2 P1-29	B NC
20 42	ST3 +14.5V	A2 A7	B D
21 43	ST4 GND	A2 A18	B NC
22 44	ST5 ST6	A2 A2	B A

*SEE NOTE 6

SERIAL PREFIX: 2107A01633

F +10V TEMP DEPENDENT POWER SUPPLY

C POWER SUPPLIES

A2 FRONT PANEL SWITCH ASSEMBLY

RES BW

VIDEO FILTER

A LC RESOLUTION BANDWIDTH CONTROL

B XTAL RESOLUTION BANDWIDTH CONTROL

C LC PIN DRIVER BUFFER

D XTAL PIN DRIVE BUFFER

A2 FRONT PANEL SWITCH ASSEMBLY

TIME/DIV

MAN

E MANUAL SWEEP CONTROL

I CURRENT SOURCE

G SWEEP CAL. SWITCH

A9

FIGURE 8-40. SWEEP GENERATOR/BANDWIDTH CONTROL ASSEMBLY A9, SCHEMATIC DIAGRAM (1 OF 2) (SERIAL PREFIX 2107A01633)

A9 SWEEP GENERATOR/BAND WIDTH CONTROL ASSEMBLY
08559-60023 (2 of 2)

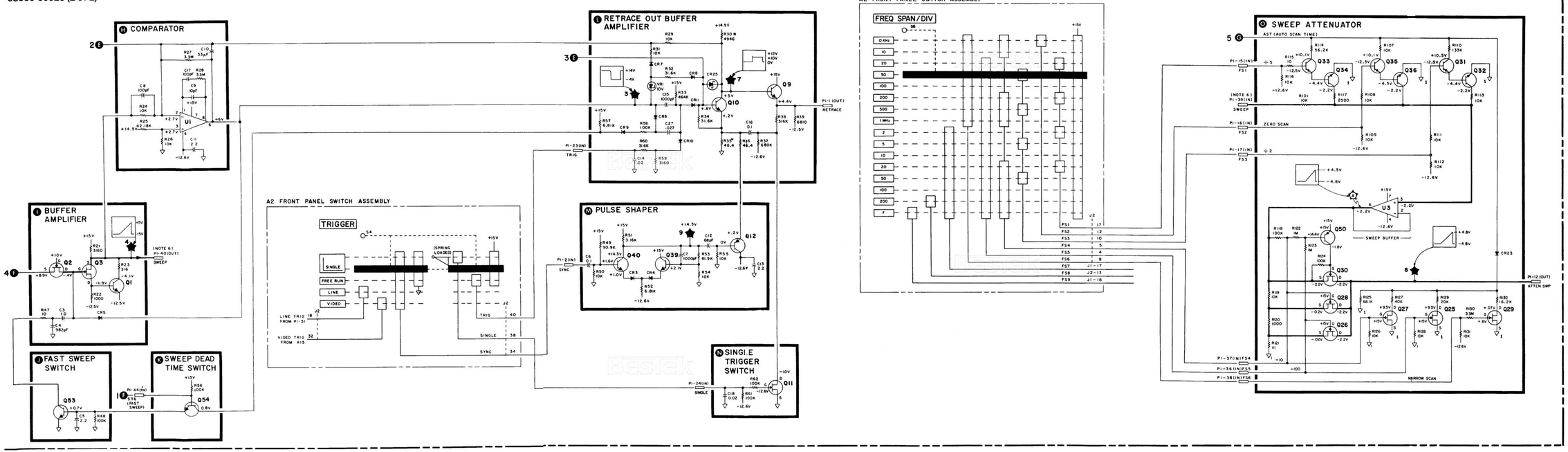

NOTES:

1. REFERENCE DESIGNATORS WITHIN THIS ASSEMBLY ARE ABBREVIATED. PREFIX ABBREVIATION WITH ASSEMBLY NUMBER FOR COMPLETE REFERENCE DESIGNATOR.
2. UNLESS OTHERWISE INDICATED: RESISTANCE IN OHMS (Ω) CAPACITANCE IN MICROFARADS (μF) INDUCTANCE IN MICROHENRIES (μH)
3. * INDICATES FACTORY SELECTED COMPONENT. VALUE SHOWN IS TYPICAL.
4. A8MP1 IS A THERMAL LINK. Q7 PROVIDES TEMPERATURE COMPENSATION FOR Q4.
5. Q5 IS A 1 mA CURRENT LIMITER.
6. P1-40 IS CONNECTED TO P1-39 ON THE MOTHERBOARD ALLOWING THE SWEEP TO BE OUTPUT AT P1-40 AND INPUT AT P1-39.
7. MNEMONIC TABLE

MNEMONIC	DESCRIPTION
AST	AUTO SCAN TIME
ATTEN SWP	ATTENUATED SWEEP VOLTAGE
BW1-7	BANDWIDTH CONTROL LINES
FS1-6	FREQUENCY SPAN CONTROL LINES
ST1-7	SCAN TIME CONTROL LINE (ST6 ENABLES FAST SCAN TIMES)

SERIAL PREFIX: 2107A01633

FIGURE 8-40. SWEEP GENERATOR/BANDWIDTH CONTROL ASSEMBLY A9, SCHEMATIC DIAGRAM (2 OF 2) (SERIAL PREFIX 2107A01633)

Pages 8-117 through 8-127/8-128: THIRD CONVERTER ASSEMBLY A10

Table 8-7. Third Converter Assembly A10, Replaceable Parts

2218A & Below

Delete the following:
A10C57, A10C58, A10C59, A10R52, A10R53, and A10U2.
Chacge A10R6 to HP Part Number 0757-0280, Check Digit 3, RESISTOR 1K 1%.125W F TC=0+-100.
Change A10R8 to HP Part Number 0757-0420, Check Digit 3, RESISTOR 750 1%.125W F TC=0+-100.
Change A10R11 to HP Part Number 0757-0405, Check Digit 4, RESISTOR 162 1% .125W F TC=0+-100.

2019A00721 & Below

Change A10MP5 to HP Part Number 0363-0040, Check Digit 8, CONTACT-FINGER .58-WD .219-FREE-HGT.
Add A10MP6 and A10MP7, HP Part Number 0363-0040, Check Digit 8, CONTACT-FINGER .58-WD .219-FREE-HGT.

1945A00261,263, 269,271,280 & Below

Delete A10MP5,A10MP6, and A10MP7.

1942A & Below

NOTE

The following components have preferred replacements: A10C22, A10C50, A10C54, A10C55, A10CR1, A10CR4, and A10L15. If the instrument does not contain the preferred replacement values, as shown in the Replaceable Parts list and Schematic in the Manual, then these components should all be replaced at the same time.

Figure 8-13. Third Converter Assembly A10, Component Locations

2218A & Below

Replace Figure 8-43 with new Figure 8-43 (SERIAL PREFIX 2218A) included in this Manual Backdating supplement.

Figure 8-44. Third Converter Assembly A10, Schematic Diagram

2218A & Below

Replace funcbion block (J) of Figure 8-44 with new P/O Figure 8-44 (SERIAL PREFIX 2218A) included in this Manual Backdating supplement.
Make the following changes in function block (D).
Change R6 to 1000.
Change R8 to 750.
Change R11 to 162.
Change -10.6 VF to -12.6 VF in two places.

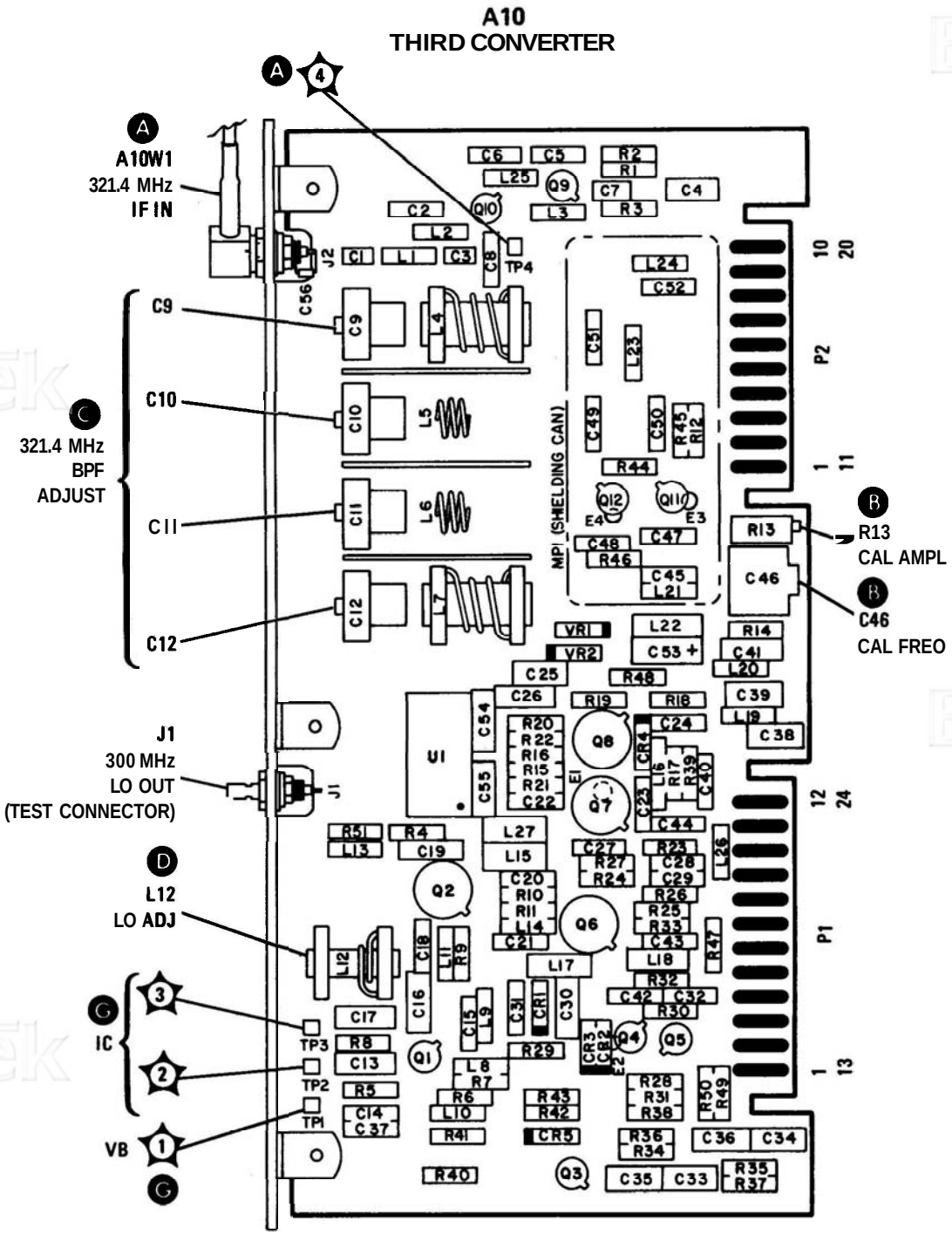

FIGURE 8-43. THIRD CONVERTER ASSEMBLY A10, COMPONENT LOCATIONS (SERIAL PREFIX 2218A)

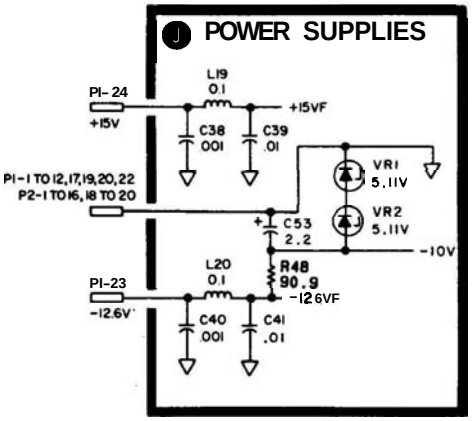

FIGURE 8-44. THIRD CONVERTER ASSEMBLY A10, SCHEMATIC DIAGRAM (SERIAL PREFIX 2218A)

Pages 8-129 through 8-141/8-142: BANDWIDTH FILTER NO. 1 ASSEMBLY A11

Table 8-8: Bandwidth Filter No. 1 Assembly All, Replaceable Parts

1909A & Below

Change **A11** to HP Part Number 08559-60057, Check Digit 9, BANDWIDTH FILTER NO. 1.
Add **A11C3,** HP Part Number **0160-2236,** Check Digit 8, CAPACITOR-FXD **1PF +-.25PF 500VDC** CER.
Change **A11C16*, A11C20*, A11C43*,** and **A11C64*** to HP Part Number 0160-0134, Check Digit 1, CAPACITOR-FXD **220PF** +-5% **300VDC** MICA.
Change **A11C14** and **A11C37** to HP Part Number 0160-2250, Check Digit 6, CAPACITOR-FXD **5.1PF +-.25PF 500VDC CER.**
Change **A11C21** and **A11C44** to HP Part Number 0160-3431, Check Digit 7, CAPACITOR-FXD **6.8PF** +-. 5PF **500VDC** CER.
Change **A11R23*** and **A11R48*** to HP Part Number **0757-0441,** Check Digit 8, RESISTOR **8.25K** 1% **.125W** F **TC=0+-100.**
Delete **A11R24** and **A11R25.**
Change **A11R18** and **A11R41** to HP Part Number **0757-0279,** Check Digit **0,** RESISTOR **3.16K** 1% **.125W** F **TC=0+-100.**
Change **A11R28** and **A11R52** to HP Part Number 0757-0290, Check Digit 5, RESISTOR **6.19K** 1% **.125W** F **TC=0+-100.**

Figure 8-55. Bandwidth Filter No. 1 Assembly All, Component Locations

1909A & Below

Delete R25.
Change R24 to **W1.**
Add C3 below R5.

Figure 836. Bandwidth Filter No. 1 Assembly All, Schematic Diagram

1909A & Below

Change All to HP Part Number 08559-60057.
In function block **(B),** add a capacitor, **C3,** 1.0 PF, in parallel with R5.
Replace function block **(C)** with P/O Figure 8-56 (SERIAL PREFIX **1909A)** included in this Manual Backdating supplement.
Make the following changes in function block **(D):**
Change C14 to 5.1 PF.
Change **R23*** to **14.7K.**
Change R18 to 3160.
Make the following changes in function block **(F):**
Change **C43*** to 220 PF.
Change C44 to 6.8 PF.
Change **C64*** to 220 PF.
Change R52 to **6**190.
Make the following changes in function block (G):
Change C37 to 5.1 PF.
Change **R48*** to **14.7K.**
Change R41 to 3160.

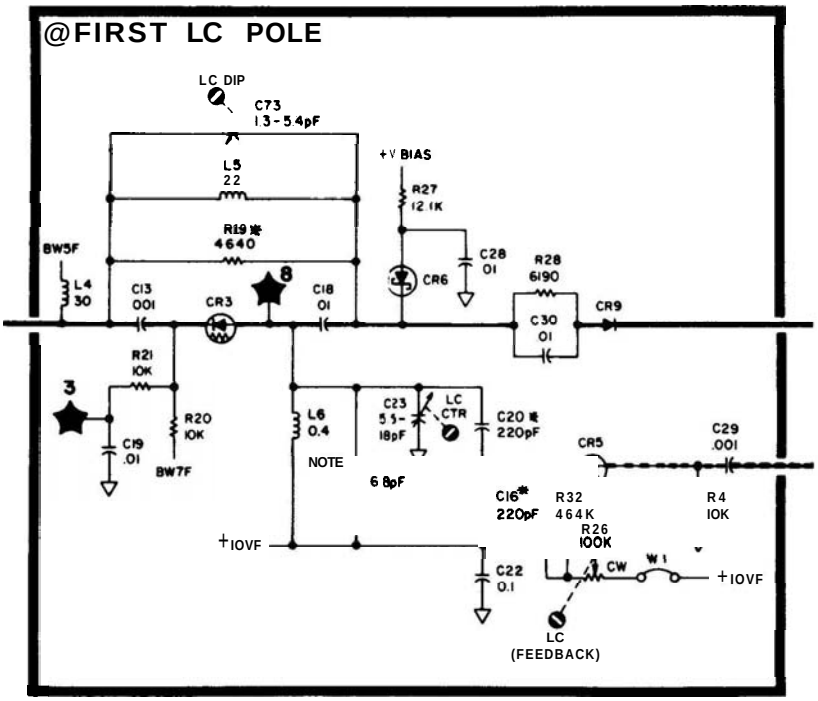

P/O FIGURE 8-56. BANDWIDTH FILTER NO. 1 ASSEMBLY A11, SCHEMATIC DIAGRAM (SERIAL PREFIX 1909A)

Pages 8–143 through 8–155/8–156: STEP GAIN ASSEMBLY A12

Table 8–10. Step Gain Assembly A12, Replaceable Parts

2107A & Below	Delete A12C40, A12C41, and A12C42.

Figure 8-60. Step Gain Assembly A12, Schematic Diagram

2107A & Below	In function block (E), delete C40. In function block (F), delete C41. In function block (G), delete C42.

Pages 8-157 through 8-165/8-166: BANDWIDTH FILTER NO. 2 ASSEMBLY A13

Table 8-11: Bandwidth Filter No. 2 Assembly A13, Replaceable Parts

1909A & Below

Change A13 to HP Part Number 08559-60057, Check Digit 9, BANDWIDTH FILTER NO. 2.
Add A13C3, HP Part Number 0160-2236, Check Digit 8, CAPACITOR-FXD 1PF +-.25PF 500VDC CER.
Change A13C16*, A13C20*, A13C43*, and A13C64* to HP Part Number 0160-0134, Check Digit 1, CAPACITOR-FXD 220PF +-5% 300VDC MICA.
Change A13C21 and A13C44 to HP Part Number 0160-3431, Check Digit 7, CAPACITOR-FXD 6.8PF +-.5PF 500VDC CER.
Change A13C14 and A13C37 to HP Part Number 0160-2250, Check Digit 6, CAPACITOR-FXD 5.1PF +-.25PF 500VDC CER.
Change A13R23* and A13R48* to HP Part Number 0757-0441, Check Digit 8, RESISTOR 8.25K 1%.125W F TC=0+-100.
Delete A13R24 and A13R25.
Change A13R18 and A13R41 to HP Part Number 0757-0279, Check Digit 0, RESISTOR 3.16K 1%.125W F TC=0+-100.
Change A13R28 and A13R52 to HP Part Number 0757-0290, Check Digit 5, RESISTOR 6.19K 1%.125W F TC=0+-100.

Figure 8-62. Bandwidth Filter No. 2 Assembly A13, Component Locations

1909A & Below

Delete R25.
Change R24 to W1.
Add C3 below R5.

Figure 8-63: Bandwidth Filter No. 2 Assembly A13, Schematic Diagram

1909A & Below

Change A13 to HP Part Number 08559-60057.
In function block (B), add a capacitor, C3, 1.0 PF, in parallel with R5.
Replace function block (C) with P/O Figure 8-63 (SERIAL PREFIX 1909A) included in this Manual Backdating supplement.
Make the following changes in function block (D):
Change C14 to 5.1 PF.
Change R23* to 14.7K.
Change R18 to 3160.
Make the following changes in function block (F):
Change C43* to 220 PF.
Change C44 to 6.8 PF.
Change C64* to 220 PF
Change R52 to 6190.
Make the following changes in function block (G):
Change C37 to 5.1 PF.
Change R48* to 14.7K.
Change R41 to 3160.

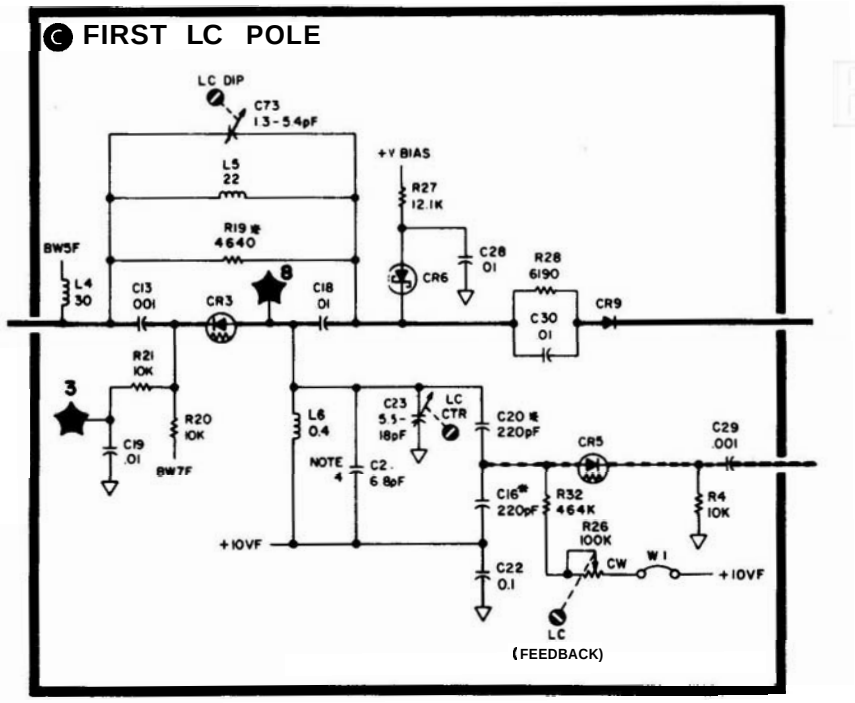

P/O FIGURE 8-63. BANDWIDTH FILTER NO. 2 ASSEMBLY A13, SCHEMATIC DIAGRAM (SERIAL PREFIX 1909A)

Pages 8-167 through 8-179/8-180: LOG AMPLIFIER ASSEMBLY A14

Table 8-12. Log Amplifier Assembly A14, Replaceable Parts

2208A & Below — Replace Table 8-12 with new Table 8-12 (SERIAL PREFIX 2208A) included in this Manual Backdating supplement.

Figure 8-68. Log Amplifier Assembly A14, Component Locations

2208A & Below — Replace Figure 8-68 with new Figure 8-68 (SERIAL PREFIX 2208A) included in this Manual Backdating supplement.

Figure 8-69. Log Amplifier Assembly A14, Schematic Diagram, (1 of 2)

2208A & Below — Replace Figure 8-69 (1 of 2) with new Figure 8-69 (1 of 2) (SERIAL PREFIX 2208A) included in this Manual Backdating supplement.

Figure 8-69. Log Amplifier Assembly A14, Schematic Diagram (2 of 2)

2208A & Below — Replace Figure 8-69 (2 of 2) with new Figure 8-69 (2 of 2) (SERIAL PREFIX 2208A) included in this Manual Backdating supplement.

Make the following corrections to Figure 8-69 (2 of 2) (SERIAL PREFIX 2208A):

Connect one side of R131 to the collector of Q25.
Connect the other side of R131 to the negative side of C79.
Connect the positive side of C79 to ground.

TABLE 812. LOG AMPLIFIER ASSEMBLY A14, REPLACEABLE PARTS (1 OF 4) (SERIAL PREFIX 2208A)

Reference Designation	HP Part Number	CD	Qty	Description	Mfr Code	Mfr Part Number
A14	08565-60111	4	1	LOG AMPLIFIER	28480	08565-60111
A14C1	0160-2055	9	58	CAPACITOR-FXD .01UF +80-20% 100VDC CER	28480	0160-2055
A14C2	0160-3459	9	7	CAPACITOR-FXD .02UF +-20% 100VDC CER	28480	0160-3459
A14C3	0160-3459	9		CAPACITOR-FXD .02UF +-20% 100VDC CER	28480	0160-3459
A14C4	0160-3459	9		CAPACITOR-FXD .02UF +-20% 100VDC CER	28480	0160-3459
A14C5	0160-3459	9		CAPACITOR-FXD .02UF +-20% 100VDC CER	28480	0160-3459
A14C6	0160-2055	9		CAPACITOR-FXD .01UF +80-20% 100VDC CER	20480	0160-2055
A14C7	0160-3459	9		CAPACITOR-FXD .02UF +-20% 100VDC CER	20400	0160-3459
A14C8	0160-3459	9		CAPACITOR-FXD .02UF +-20% 100VDC CER	28480	0160-3459
A14C9	0160-2055	9		CAPACITOR-FXD .01UF +80-20% 100VDC CER	28480	0160-2055
A14C10	0160-2055	9		CAPACITOR-FXD .01UF +80-20% 100VDC CER	28480	0160-2055
A14C11	0160-2055	9		CAPACITOR-FXD .01UF +80-20% 100VDC CFR	28480	0160-2055
A14C12	0160-2055	9		CAPACITOR-FXD .01UF +80 20% 100VDC CER	20480	0160-2055
A14C13	0160-2055	9		CAPACITOR-FXD .01UF +80-20% 100VDC CER	28480	0160-2055
A14C14	0160-2055	9		CAPACITOR-FXD .01UF +80-20% 100VDC CER	28480	0160-2055
A14C15	0160-2055	9		CAPAC ▮ TOR-FXD .01UF +80-20% 100VDC CER	28480	0160-2055
A14C16	0160-2055	9		CAPAC ▮ TOR-FXD .01UF +80-20% 100VDC CER	20480	0160-2055
A14C17	0160-2055	9		CAPACITOR-FXD .01UF +80-20% IOOVDC CFR	28480	0160-2055
A14C18*	0160-2234	6	1	CAPACITOR-FXD .51PF +-.25PF 500VDC CER	28480	0160-2234
A14C19	0160-2055	9		CAPAC ▮ TOR-FXD .01UF +80-20% 100VDC CER	28480	0160-2055
A14C20	0160-2236	8		CAPACITOR-FXD 1PF +-.25PF 500VDC CER	20480	0160-2236
A14C21	0160-2055	9		CAPACITOR-FXD .01UF +80-20% 100VDC CER	29480	0160-2055
A14C22	0160-2055	9		CAPACITOR-FXD .01UF +80-20% IOOVDC CER	28480	0160-2055
A14C23	0160-2055	9		CAPACITOR-FXD .01UF +80-20% 100VDC CFR	28480	0160-2055
A14C24	0160-2055	9		CAPACITOR-FXD .01UF +80 20% 100VDC CER	68480	0160-2055
A14C25	0160-2055	9		CAPACITOR-FXD .01UF +80-20% 100VDC CFR	28480	0160-2055
A14C26	0160-2055	9		CAPACITOR-FXD .01UF +80-20% 100VDC CER	20480	0160-2055
A14C27	0160-2055	9		CAPAC ▮ TOR-FXD .01UF +80-20% 100VDC CER	28480	0160-2055
A14C28	0180-0228	6	1	CAPACITOR-FXD 22UF+-10% 15VDC TA	56287	150D226X9015B2
A14C29	0160-2055	9		CAPACITOR-FXD .01UF +DO-20% 100VDC CER	20480	0160-2055
A14C30*	0160-2236	8	5	CAPACITOR-FXD 1PF +-.25PF 500VDC CER	28480	0160-2236
A14C31	0160-2055	9		CAPACITOR-FXD .01UF +80-20% IOOVDC CER	28480	0160-2055
A14C32	0160-2055	9		CAPACITOR-FXD .01UF +80-20% 100VDC CER	28480	0160-2055
A14C33	0160-2055	9		CAPACITOR-FXD .01UF +80-20% IOOVDC CER	28400	0160-2055
A14C34	0160-2055	9		CAPACITOR-FXD .OIUF +80-20% 100VDC CER	28480	0160-2055
A14C35	0160-2055	9		CAPACITOR-FXD .01UF +80-20% IOOVDC CER	28480	0160-2055
A14C36	0160-2055	9		CAPACITOR-FXD .OIUF +80-20% 100VDC CER	28480	0160-2055
A14C37	0160-2055	9		CAPACITOR-FXD .01UF +80-20% IOOVDC CER	28480	0160-2055
A14C38	0160-2055	9		CAPACITOR-FXD .OIUF +80-20% 100VDC CER	20480	0160-2055
A14C39	0160-2055	9		CAPACITOR-FXD .01UF +80-20% 100VDC CER	28480	0160-2055
A14C40*	0160-2236	8		CAPACITOR-FXD 1PF +-.25PF 500VDC CER	20480	0160-2236
A14C41	0160-2055	9		CAPACITOR-FXD .01UF +80-20% IOOVDC CER	20480	0160-2055
A14C42	0160-2055	9		CAPACITOR-FXD .01UF +80-20% 100VDC CER	38480	0160-2055
A14C43	0160-2055	9		CAPACITOR-FXD .01UF +80-20% IOOVDC CFR	20480	0160-2055
A14C44	0160-2055	9		CAPACITOR-FXD .01UF +80-20% 100VDC CER	28480	0160-2055
A14C45	0160-2055	9		CAPACITOR-FXD .01UF +80-20% IOOVDC CER	20480	0160-2055
A14C46	0160-2055	9		CAPACITOR-FXD .01UF +80-20% IOOVDC CER	20480	0160-2055
A14C47	0160-2055	9		CAPACITOR-FXD .01UF +80-20% IOOVDC CER	20480	0160-2055
A14C48	0160-2055	9		CAPACITOR-FXD .01UF +80-20% 100VDC CER	28480	0160-2055
A14C49	0160-2055	9		CAPACITOR-FXD .01UF +80-20% 100VDC CER	29480	0160-2055
A14C50	0160-2055	9		CAPACITOR-FXD .01UF +80-20% 100VDC CER	28480	0160-2055
A14C51	0160-3459	9		CAPACITOR-FXD .02UF +-20% IOOVDC CER	28480	0160-3459
A14C52*	0160-2236	8		CAPACITOR-FXD IPF +-.25PF SOOVDC CER	28480	0160-2236
A14C53	0160-2055	9		CAPACITOR-FXD .01UF +80-20% 100VDC CFR	28480	0160-2055
A14C54	0160-2055	9		CAPACITOR-FXD .01UF +80-20% 100VDC CCR	28480	0160-2055
A14C55	0160-2055	9		CAPACITOR-FXD .01UF +80-20% 100VDC CER	20480	0160-2055
A14C56	0160-2055	9		CAPACITOR-FXD .01UF +80-20% 100VDC CER	28480	0160-2055
A14C57	0160-2256	2	1	CAPACITOR-FXD 9.1PF +-.25PF SOOVDC CCR	28480	0160-2256
A14C58	0160-2055	9		CAPACITOR-FXD .01UF +80-20% IOOVDC CER	28480	0160-2055
A14C59	0160-2055	9		CAPACITOR-FXD .01UF +80-20% IOOVDC CER	28480	0160-2055
A14C60	0160-2055	9		CAPACITOR-FXD .OIUF +80-20% 100VDC CER	28480	0160-2055
A14C61	0160-2055	9		CAPACITOR-FXD .01UF +80-20% IOOVDC CER	28480	0160-2055
A14C62	0140-0195	2	1	CAPACITOR-FXD 130PF +-5% 300VDC MICA	72136	DM15F131J0300WV1CR
A14C63	0160-2055	9		CAPACITOR-FXD .01UF +80-20% IOOVDC CER	28480	0160-2055
A14C64	0160-2308	5	1	CAPACITOR-FXD 36PF +-5% 300VDC MICA	28480	0160-2308
A14C65	0160-2240	4	1	CAPACITOR-FXD 2PF +-.25PF SOOVDC CER	28480	0160-2240
A14C66	0160-2055	9		CAPACITOR-FXD .OIUF +80-20% 100VDC CER	28480	0160-2055
A14C67*	0160-2236	8		CAPACITOR-FXD IPF +-.25PF SOOVDC CER	28480	0160-2236
A14C68	0160-2055	9		CAPACITOR-FXD .OIUF +80-20% 100VDC CER	28480	0160-2055
A14C69	0160-2055	9		CAPACITOR-FXD .01UF +80-20% 100VDC CFR	28480	0160-2055
A14C70	0160-2055	9		CAPACITOR-FXD .01UF +80-20% IOOVDC CER	28480	0160-2055

See introduction to this section for ordering information
'Indicates factory selected value

TABLE 8-12. LOG AMPLIFIER ASSEMBLY A14, REPLACEABLE PARTS (2 OF 4) (SERIAL PREFIX 2208A)

Reference Designation	HP Part Number	C D	Qty	Description	Mfr Code	Mfr Part Number
A14C71	0160-2055	9		CAPACITOR-FXD .01UF +80-20% 100VDC CER	28480	0160-2055
A14C72	0160-2055	9		CAPACITOR-FXD .01UF +80-20% 100VDC CER	28480	0160-2055
A14C73	0160-2055	9		CAPACITOR-FXD .01UF +80-20% 100VDC CER	28480	0160-2055
A14C74	0180-2286	4	1	CAPACITOR-FXD 60UF+-10% 6VDC TA	56289	150D606X9006B2
A14C75	0160-2055	9		CAPACITOR-FXD .01UF +80-20% 100VDC CER	28480	0160-2055
A14C76	0160-2055	9		CAPACITOR-FXD .01UF +80-20% 100VDC CER	28480	0160-2055
A14C77	0160-2055	9		CAPACITOR-FXD .01UF +80-20% 100VDC CER	28480	0160-2055
A14C78	0180-0197	8	1	CAPACITOR-FXD 2.2UF+-10% 20VDC TA	56289	150D225X9020A2
A14C79	0160-0128	3	1	CAPACITOR-FXD 2.2UF +-20% 50VDC CER	28480	0160-0128
A14CR1	1901-0040	1	10	DIODE-SWITCHING 30V 50MA 2NS DO-35	28480	1901-0040
A14CR2	1901-0040	1		DIODE-SWITCHING 30V 50MA 2NS DO-35	28480	1901-0040
A14CR3	1901-1085	6	17	DIODE-SM SIG SCHOTTKY	28480	1901-1085
A14CR4	1901-1085	6		DIODE-SM SIG SCHOTTKY	28480	1901-1085
A14CR5	1901-0040	1		DIODE-SWITCHING 30V 50MA 2NS DO-35	28480	1901-0040
A14CR6	1901-0040	1		DIODE SWITCHING 30V 50MA 2NS DO-35	28480	1901-0040
A14CR7	1901-0040	1		DIODE-SWITCHING 30V 50MA 2NS DO-35	28480	1901-0040
A14CR8	1901-1085	6		DIODE-SM SIG SCHOTTKY	28480	1901-1085
A14CR9	1901-1085	6		DIODE-SM SIG SCHOTTKY	28480	1901-1085
A14CR10	1901-1085	6		DIODE SM SIG SCHOTTKY	28480	1901-1085
A14CR11	1901-1085	6		DIODE-SM SIG SCHOTTKY	28480	1901-1085
A14CR12	1901-1085	6		DIODE-SM SIG SCHOTTKY	28480	1901-1085
A14CR13	1901-1085	6		DIODE-SM SIG SCHOTTKY	28480	1901-1085
A14CR14	1901-0047	8	3	DIODE-SWITCHING 20V 75MA 10NS	28480	1901-0047
A14CR15	1901-1085	6		DIODE-SM SIG SCHOTTKY	28480	1901-1085
A14CR16	1901-1070	9	2	DIODE-PIN 110V	28480	1901-1070
A14CR17	1901-1085	6		DIODE SM SIG SCHOTTKY	28480	1901-1085
A14CR18	1901-1070	9		DIODE-PIN 110V	28480	1901-1070
A14CR19	1901-0040	1		DIODE SWITCHING 30V 50MA 2NS DO-35	28480	1901-0040
A14CR20	1901-1085	6		DIODE-SM SIG SCHOTTKY	28480	1901-1085
A14CR21	1901-1085	6		DIODE-SM SIG SCHOTTKY	28480	1901-1085
A14CR22	1901-1085	6		DIODE-SM SIG SCHOTTKY	28480	1901-1085
A14CR23	1901-1085	6		DIODE-SM SIG SCHOTTKY	28480	1901-1085
A14CR24	1901-0040	1		DIODE-SWITCHING 30V 50MA 2NS DO-35	28480	1901-0040
A14CR25	1901-1085	6		DIODE-SM SIG SCHOTTKY	28480	1901-1085
A14CR26	1901-0047	8		DIODE-SWITCHING 20V 75MA 10NS	28480	1901-0047
A14CR27	1901-1085	6		DIODE SM SIG SCHOTTKY	28480	1901-1085
A14CR28	1901-1085	6		DIODE-SM SIG SCHOTTKY	28480	1901-1085
A14CR29	1901-0047	8		DIODE-SWITCHING 20V 75MA 10NS	28480	1901-0047
A14CR30	1901-0040	1		DIODE-SWITCHING 30V 50MA 2NS DO-35	28480	1901-0040
A14CR31	1901-0040	1		DIODE-SWITCHING 30V 50MA 2NS DO-35	28480	1901-0040
A14CR32	1901-0040	1		DIODE-SWITCHING 30V 50MA 2NS DO-35	28480	1901-0040
A14E1	9170-0029	3	1	CORE-SHIELDING BEAD	28480	9170-0029
A14L1	9100-1622	7	2	INDUCTOR RF-CH-MLD 24UH 5% .166DX.385LG	28480	9100-1622
A14L2	9140-0105	3	1	INDUCTOR RF-CH-MLD 8.2UH 10%	28480	9140-0105
A14L3	9100-1619	2	7	INDUCTOR RF-CH-MLD 6.8UH 10%	28480	9100-1619
A14L4	9100-1619	2		INDUCTOR RF-CH-MLD 6.8UH 10%	28480	9100-1619
A14L5	9100-1619	2		INDUCTOR RF-CH-MLD 6.8UH 10%	28480	9100-1619
A14L6	9100-1619	2		INDUCTOR RF-CH-MLD 6.8UH 10%	28480	9100-1619
A14L7	9100-1619	2		INDUCTOR RF-CH-MLD 6.8UH 10%	28480	9100-1619
A14L8	9100-1619	2		INDUCTOR RF-CH-MLD 6.8UH 10%	28480	9100-1619
A14L9	9100-1627	2	1	INDUCTOR RF-CH-MLD 39UH 5% .166DX.385LG	28480	9100-1627
A14L10	9100-1629	4	1	INDUCTOR RF-CH-MLD 47UH 5% .166DX.385LG	28480	9100-1629
A14L11	9100-1622	7		INDUCTOR RF-CH-MLD 24UH 5% .166DX.385LG	28480	9100-1622
A14L12	9100-1619	2		INDUCTOR RF-CH-MLD 6.8UH 10%	28480	9100-1619
A14L13	9140-0145	1	1	INDUCTOR RF-CH-MLD 8.2UH 10% .105DX.26LG	28480	9140-0145
A14L14	9100-2269	0	1	INDUCTOR RF-CH-MLD 27UH 10% .105DX.26LG	28480	9100-2269
A14Q1	1854-0071	7	3	TRANSISTOR NPN SI PD=300MW FT=200MHZ	28480	1854-0071
A14Q2	1854-0019	3	14	TRANSISTOR NPN SI TO-18 PD=360MW	28480	1854-0019
A14Q3	1854-0019	3		TRANSISTOR NPN SI TO-18 PD=360MW	28480	1854-0019
A14Q4	1854-0019	3		TRANSISTOR NPN SI TO-18 PD=360MW	28480	1854-0019
A14Q5	1854-0019	3		TRANSISTOR NPN SI TO-18 PD=360MW	28480	1854-0019
A14Q6	1854-0019	3		TRANSISTOR NPN SI TO-18 PD=360MW	28480	1854-0019
A14Q7	1854-0019	3		TRANSISTOR NPN SI TO-18 PD=360MW	28480	1854-0019
A14Q8	1854-0019	3		TRANSISTOR NPN SI TO-18 PD=360MW	28480	1854-0019
A14Q9	1854-0019	3		TRANSISTOR NPN SI TO-18 PD=360MW	28480	1854-0019
A14Q10	1854-0019	3		TRANSISTOR NPN SI TO-18 PD=360MW	28480	1854-0019
A14Q11	1854-0019	3		TRANSISTOR NPN SI TO-18 PD=360MW	28480	1854-0019
A14Q12	1854-0019	3		TRANSISTOR NPN SI TO-18 PD=360MW	28480	1854-0019
A14Q13	1854-0019	3		TRANSISTOR NPN SI TO-18 PD=360MW	28480	1854-0019
A14Q14	1854-0019	3		TRANSISTOR NPN SI TO-18 PD=360MW	28480	1854-0019
A14Q15	1854-0019	3		TRANSISTOR NPN SI TO-18 PD=360MW	28480	1854-0019
A14Q16	1853-0020	4	2	TRANSISTOR PNP SI PD=300MW FT=150MHZ	28480	1853-0020
A14Q17	1853-0007	7	1	TRANSISTOR PNP 2N3251 SI TO-18 PD=360MW	04713	2N3251
A14Q18	1854-0345	8	1	TRANSISTOR NPN 2N5179 SI TO-72 PD=200MW	04713	2N5179
A14Q19	1853-0015	7	1	TRANSISTOR PNP SI PD=200MW FT=500MHZ	28480	1853-0015
A14Q20	1854-0475	5	1	TRANSISTOR-DUAL NPN PD=750MW	28480	1854-0475

See introduction to this section for ordering information
*Indicates factory selected value

TABLE 812. LOG AMPLIFIER ASSEMBLY A14, REPLACEABLE PARTS (3 OF 4) (SERIAL **PREFIX 2208A)**

Reference Designation	HP Part Number	CD	Qty	Description	Mfr Code	Mfr Part Number
A14Q21	1854-0404	0	1	TRANSISTOR NPN SI TO-18 PD=360MW	28480	1854-0404
A14Q22	1853-0020	4		TRANSISTOR PNP SI PD=300MW FT=150MHZ	28480	1853-0020
A14Q23	1854-0071	7		TRANSISTOR NPN SI PD=300MW FT=200MHZ	28480	1854-0071
A14Q24	1854-0071	7		TRANSISTOR NPN SI PD=300MW FT=200MHZ	28480	1854-0071
A14Q25	1854-0637	1	1	TRANSISTOR NPN 2N2219A SI TO-5 PD=800MW	01295	2N2219A
A14R1	2100-3189	2	2	RESISTOR-TRHR 2K 10% C SIDE-ADJ 17-TRN	02111	43P202
A14R2	2100-3161	6	1	RESISTOR-TRHR 20K 10% C SIDE-ADJ 17-TRN	02111	43P203
A14R3	2100-3189	2		RESISTOR-TRHR 2K 10% C SIDE-ADJ 17-TRN	02111	43P202
A14R4	0757-0442	9	6	RESISTOR 10K 1% .125W F TC=0+-100	24546	C4-1/8-T0-1002-F
A14R5	0757-0279	0		RESISTOR 3.16K 1% .125W F TC=0+-100	24546	C4-1/8-T0-3161-F
A14R6*	0757-0346	2	19	RESISTOR 10 1% .125W F TC=0+-100	24546	C4-1/8-T0-10R0-F
A14R7	0757-0442	9		RESISTOR 10K 1% .125W F TC=0+-100	24546	C4-1/8-T0-1002-F
A14R8*	0757-0280	3	6	RESISTOR 1K 1% .125W F TC=0+-100	24546	C4-1/8-T0-1001-F
A14R9	0757-0439	4	9	RESISTOR 6.81K 1% .125W F TC=0+-100	24546	C4-1/8-T0-6811-F
A14R10	0757-0465	6	2	RESISTOR 100K 1% .125W F TC=0+-100	24546	C4-1/8-T0-1003-F
A14R11	0757-0440	7	2	RESISTOR 7.5K 1% .125W F TC=0+-100	24546	C4-1/8-T0-7501-F
A14R12	0698-3157	3	2	RESISTOR 19.6K 1% .125W F TC=0+-100	24546	C4-1/8-T0-1962-F
A14R13	0698-3444	1	8	RESISTOR 316 1% .125W F TC=0+-100	24546	C4-1/8-T0-316R-F
A14R14	0757-0420	3	1	RESISTOR 750 1% .125W F TC=0+-100	24546	C4-1/8-T0-751-F
A14R15	0698-3136	8	1	RESISTOR 17.8K 1% .125W F TC=0+-100	24546	C4-1/8-T0-1782-F
A14R16*	0698-3443	0	1	RESISTOR 287 1% .125W F TC=0+-100	24546	C4-1/8-T0-287R-F
A14R17	0698-3156	2	1	RESISTOR 14.7K 1% .125W F TC=0+-100	24546	C4-1/8-T0-1472-F
A14R18				NOT ASSIGNED		
A14R19	0698-0085	0	2	RESISTOR 2.61K 1% .125W F TC=0+-100	24546	C4-1/8-T0-2611-F
A14R20	0757-0279	0		RESISTOR 3.16K 1% .125W F TC=0+-100	24546	C4-1/8-T0-3161-F
A14R21	0757-0289	2	12	RESISTOR 13.3K 1% .125W F TC=0+-100	19701	MF4C1/8-T0-1332-F
A14R22	0757-0346	2		RESISTOR 10 1% .125W F TC=0+-100	24546	C4-1/8-T0-10R0-F
A14R23	0698-3444	1		RESISTOR 316 1% .125W F TC=0+-100	24546	C4-1/8-T0-316R-F
A14R24	0757-0279	0		RESISTOR 3.16K 1% .125W F TC=0+-100	24546	C4-1/8-T0-3161-F
A14R25	0698-3444	1		RESISTOR 316 1% .125W F TC=0+-100	24546	C4-1/8-T0-316R-F
A14R26	0757-0298	5		RESISTOR 6.19K 1% .125W F TC=0+-100	19701	MF4C1/8-T0-6191-F
A14R27	0757-0346	2		RESISTOR 10 1% .125W F TC=0+-100	24546	C4-1/8-T0-10R0-F
A14R28	0698-3449	6	1	RESISTOR 28.7K 1% .125W F TC=0+-100	24546	C4-1/8-T0-2872-F
A14R29	0757-0199	3	1	RESISTOR 21.5K 1% .125W F TC=0+-100	24546	C4-1/8-T0-2152-F
A14R30	0698-3152	8	2	RESISTOR 3.48K 1% .125W F TC=0+-100	24546	C4-1/8-T0-3481-F
A14R31	0757-0279	0		RESISTOR 3.16K 1% .125W F TC=0+-100	24546	C4-1/8-T0-3161-F
A14R32	0757-0289	2		RESISTOR 13.3K 1% .125W F TC=0+-100	19701	MF4C1/8-T0-1332-F
A14R33	0757-0289	2		RESISTOR 13.3K 1% .125W F TC=0+-100	19701	MF4C1/8-T0-1332-F
A14R34	0698-3444	1		RESISTOR 316 1% .125W F TC=0+-100	24546	C4-1/8-T0-316R-F
A14R35*	0757-0346	2		RESISTOR 10 1% .125W F TC=0+-100	24546	C4-1/8-T0-10R0-F
A14R36	0698-3438	3	2	RESISTOR 147 1% .125W F TC=0+-100	24546	C4-1/8-T0-147R-F
A14R37	0757-0439	4		RESISTOR 6.81K 1% .125W F TC=0+-100	24546	C4-1/8-T0-6811-F
A14R38	0757-0279	0		RESISTOR 3.16K 1% .125W F TC=0+-100	24546	C4-1/8-T0-3161-F
A14R39	0698-3154	0	1	RESISTOR 4.22K 1% .125W F TC=0+-100	24546	C4-1/8-T0-4221-F
A14R40	0757-0280	3		RESISTOR 1K 1% .125W F TC=0+-100	24546	C4-1/8-T0-1001-F
A14R41	0757-0346	2		RESISTOR 10 1% .125W F TC=0+-100	24546	C4-1/8-T0-10R0-F
A14R42	0757-0346	2		RESISTOR 10 1% .125W F TC=0+-100	24546	C4-1/8-T0-10R0-F
A14R43	0757-0289	2		RESISTOR 13.3K 1% .125W F TC=0+-100	19701	MF4C1/8-T0-1332-F
A14R44				NOT ASSIGNED		
A14R45	0757-0439	4		RESISTOR 6.81K 1% .125W F TC=0+-100	24546	C4-1/8-T0-6811-F
A14R46*	0698-0083	8	2	RESISTOR 1.96K 1% .125W F TC=0+-100	24546	C4-1/8-T0-1961-F
A14R47	0757-0279	0		RESISTOR 3.16K 1% .125W F TC=0+-100	24546	C4-1/8-T0-3161-F
A14R48	0757-0289	2		RESISTOR 13.3K 1% .125W F TC=0+-100	19701	MF4C1/8-T0-1332-F
A14R49	0757-0416	7	2	RESISTOR 511 1% .125W F TC=0+-100	24546	C4-1/8-T0-511R-F
A14R50	0698-3444	1		RESISTOR 316 1% .125W F TC=0+-100	24546	C4-1/8-T0-316R-F
A14R51*	0757-0346	2		RESISTOR 10 1% .125W F TC=0+-100	24546	C4-1/8-T0-10R0-F
A14R52	0757-0465	6		RESISTOR 100K 1% .125W F TC=0+-100	24546	C4-1/8-T0-1003-F
A14R53	0698-0083	8		RESISTOR 1.96K 1% .125W F TC=0+-100	24546	C4-1/8-T0-1961-F
A14R54	0757-0280	3		RESISTOR 1K 1% .125W F TC=0+-100	24546	C4-1/8-T0-1001-F
A14R55	0698-3151	7		RESISTOR 2.87K 1% .125W F TC=0+-100	24546	C4-1/8-T0-2871-F
A14R56	0757-0458	7	1	RESISTOR 51.1K 1% .125W F TC=0+-100	24546	C4-1/8-T0-5112-F
A14R57	0757-0346	2		RESISTOR 10 1% .125W F TC=0+-100	24546	C4-1/8-T0-10R0-F
A14R58	0757-0289	2		RESISTOR 13.3K 1% .125W F TC=0+-100	19701	MF4C1/8-T0-1332-F
A14R59	0757-0442	9		RESISTOR 10K 1% .125W F TC=0+-100	24546	C4-1/8-T0-1002-F
A14R60	0698-3157	3		RESISTOR 19.6K 1% .125W F TC=0+-100	24546	C4-1/8-T0-1962-F
A14R61	0757-0442	9		RESISTOR 10K 1% .125W F TC=0+-100	24546	C4-1/8-T0-1002-F
A14R62	0698-3152	8		RESISTOR 3.48K 1% .125W F TC=0+-100	24546	C4-1/8-T0-3481-F
A14R63	0698-3159	5	1	RESISTOR 26.1K 1% .125W F TC=0+-100	24546	C4-1/8-T0-2612-F
A14R64*	0757-0279	0	10	RESISTOR 3.16K 1% .125W F TC=0+-100	24546	C4-1/8-T0-3161-F
A14R65	0757-0298	5		RESISTOR 6.19K 1% .125W F TC=0+-100	19701	MF4C1/8-T0-6191-F
A14R66	0757-0439	4		RESISTOR 6.81K 1% .125W F TC=0+-100	24546	C4-1/8-T0-6811-F
A14R67	0757-0379	1	1	RESISTOR 12.1 1% .125W F TC=0+-100	19701	MF4C1/8-T0-12R1-F
A14R68	0757-0289	2		RESISTOR 13.3K 1% .125W F TC=0+-100	19701	MF4C1/8-T0-1332-F
A14R69	0757-0448	7		RESISTOR 7.5K 1% .125W F TC=0+-100	24546	C4-1/8-T0-7501-F
A14R70	0757-0463	4	1	RESISTOR 82.5K 1% .125W F TC=0+-100	24546	C4-1/8-T0-8252-F

See introduction to this section for ordering information
***Indicates factory selected value**

TABLE 812. LOG AMPLIFIER ASSEMBLY A14, REPLACEABLE PARTS (4 OF 4) (SERIAL PREFIX 2208A)

Reference Designation	HP Part Number	C D	Qty	Description	Mfr Code	Mfr Part Number
A14R71	0698-3444	1		RESISTOR 316 1% .125W F TC=0+-100	24546	C4 1/8-T0-316R-F
A14R72	0757-0290	5		RESISTOR 6.191 1% .125W F TC=0+-100	19701	MF4C1/8-T0-6191-F
A14R73*				NOT ASSIGNED		
A14R74*	0698-3151	7	2	RESISTOR 2.87K 1% .125W F TC=0+-100	24546	C4-1/8-T0-2871-F
A14R75	0757-0442	9		RESISTOR 10K 1% .125W F TC=0+-100	24546	C4-1/8-T0-1002-F
A14R76	0757-0289	2		RESISTOR 13.3K 1% .125W F TC=0+-100	19701	MF4C1/8-T0-1332-F
A14R77	0757-0280	3		RESISTOR 1K 1% .125W F TC=0+-100	24546	C4-1/8-T0-1001-F
A14R78	0757-0346	2		RESISTOR 10 1% .125W F TC=0+-100	24546	C4-1/8-T0-10R0-F
A14R79	0757-0346	2		RESISTOR 10 1% .125W F TC=0+-100	24546	C4-1/8-T0-10R0-F
A14R80	0757-0439	4		RESISTOR 6.81K 1% .125W F TC=0+-100	24546	C4-1/8-T0-6811-F
A14R81	0757-0403	2	1	RESISTOR 121 1% .125W F TC=0+-100	24546	C4-1/8-T0-121R-F
A14R82*	0757-0290	5	8	RESISTOR 6.19K 1% .125W F TC=0+-100	19701	MF4C1/8-T0-6191-F
A14R83	0757-0418	9	1	RESISTOR 619 1% .125W F TC=0+-100	24546	C4-1/8-T0-619R-F
A14R84	0757-0482	1	1	RESISTOR 110 1% .125W F TC=0+-100	24546	C4-1/8-T0-111-F
A14R85	0757-0279	0		RESISTOR 3.16K 1% .125W F TC=0+-100	24546	C4-1/8-T0-3161-F
A14R86				NOT ASSIGNED		
A14R87	0757-0289	2		RESISTOR 13.3K 1% .125W F TC=0+-100	19701	MF4C1/8-T0-1332-F
A14R88	0757-0416	7		RESISTOR 511 1% .125W F TC=0+-100	24546	C4-1/8-T0-511R-F
A14R89	0757-0346	2		RESISTOR 10 1% .125W F TC=0+-100	24546	C4-1/8-T0-10R0-F
A14R90	0698-3444	1		RESISTOR 316 1% .125W F TC=0+-100	24546	C4-1/8-T0-316R-F
A14R91	0757-0439	4		RESISTOR 6.811 1% .125W F TC=0+-100	24546	C4-1/8-T0-6811-F
A14R92	0757-0346	2		RESISTOR 10 1% .125W F TC=0+-100	24546	C4-1/8-T0-10R0-F
A14R93	0757-0438	3	1	RESISTOR 5.11K 1% .125W F TC=0+-100	24546	C4-1/8-T0-5111-F
A14R94	0757-0346	2		RESISTOR 10 1% .125W F TC=0+-100	24546	C4-1/8-T0-10R0-F
A14R95	0757-0289	2		RESISTOR 13.3K 1% .125W F TC=0+-100	19701	MF4C1/8-T0-1332-F
A14R96	0757-0280	3		RESISTOR 1K 1% .125W F TC=0+-100	24546	C4-1/8-T0-1001-F
A14R97	0757-0346	2		RESISTOR 10 1% .125W F TC=0+-100	24546	C4-1/8-T0-10R0-F
A14R98	0757-0346	2		RESISTOR 10 1% .125W F TC=0+-100	24546	C4-1/8-T0-10R0-F
A14R99	0757-0346	2		RESISTOR 10 1% .125W F TC=0+-100	24546	C4-1/8-T0-10R0-F
A14R100	0757-0346	2		RESISTOR 10 1% .125W F TC=0+-100	24546	C4-1/8-T0-10R0-F
A14R101	0757-0439	4		RESISTOR 6.81K 1% .125W F TC=0+-100	24546	C4-1/8-T0-6811-F
A14R102*	0757-0290	5		RESISTOR 6.19K 1% .125W F TC=0+-100	17701	MF4C1/8-T0-6191-F
A14R103	0757-0405	4	1	RESISTOR 162 1% .125W F TC=0+-100	24546	C4-1/8-T0-162R-F
A14R104	0757-0279	0		RESISTOR 3.16K 1% .125W F TC=0+-100	24546	C4-1/8-T0-3161-F
A14R105	0757-0280	3		RESISTOR 1K 1% .125W F TC=0+-100	24546	C4-1/8-T0-1001-F
A14R106	0757-0289	2		RESISTOR 13.3K 1% .125W F TC=0+-100	19701	MF4C1/8-T0-1332-F
A14R107	0757-0288	1	1	RESISTOR 9.09K 1% .125W F TC=0+-100	19701	MF4C1/8-T0-9091-F
A14R108	0698-3444	1		RESISTOR 316 1% .125W F TC=0+-100	24546	C4-1/8-T0-316R-F
A14R109	0757-0439	4		RESISTOR 6.81K 1% .125W F TC=0+-100	24546	C4-1/8-T0-6811-F
A14R110	0757-0346	2		RESISTOR 10 1% .125W F TC=0+-100	24546	C4-1/8-T0-10R0-F
A14R111	0698-3158	4	1	RESISTOR 23.7K 1% .125W F TC=0+-100	24546	C4-1/8-T0-2372-F
A14R112	0698-3160	8	3	RESISTOR 31.6K 1% .125W F TC=0+-100	24546	C4-1/8-T0-3162-F
A14R113	0698-3160	8		RESISTOR 31.6K 1% .125W F TC=0+-100	24546	C4-1/8-T0-3162-F
A14R114	0698-3160	8		RESISTOR 31.6K 1% .125W F TC=0+-100	24546	C4-1/8-T0-3162-F
A14R115	0757-0346	2		RESISTOR 10 1% .125W F TC=0+-100	24546	C4-1/8-T0-10R0-F
A14R116	0757-0289	2		RESISTOR 13.3K 1% .125W F TC=0+-100	19701	MF4C1/8-T0-1332-F
A14R117	0698-0085	0		RESISTOR 2.61K 1% .125W F TC=0+-100	24546	C4-1/8-T0-2611-F
A14R118	0757-0439	4		RESISTOR 6.81K 1% .125W F TC=0+-100	24546	C4-1/8-T0-6811-F
A14R119*	0757-0290	5		RESISTOR 6.19K 1% .125W F TC=0+-100	19701	MF4C1/8-T0-6191-F
A14R120	0757-0279	0		RESISTOR 3.16K 1% .125W F TC=0+-100	24546	C4-1/8-T0-3161-F
A14R121	0698-3438	3		RESISTOR 147 1% .125W F TC=0+-100	24546	C4-1/8-T0-147R-F
A14R122	0757-0447	4	2	RESISTOR 16.2K 1% .125W F TC=0+-100	24546	C4-1/8-T0-1622-F
A14R123	0757-0447	4		RESISTOR 16.2K 1% .125W F TC=0+-100	24546	C4-1/8-T0-1622-F
A14R124	0757-0441	8	1	RESISTOR 8.25K 1% .125W F TC=0+-100	24546	C4-1/8-T0-8251-F
A14R125	0698-3260	9	1	RESISTOR 464K 1% .125W F TC=0+-100	28480	0698-3260
A14R126	0757-0442	9		RESISTOR 10K 1% .125W F TC=0+-100	24546	C4-1/8-T0-1002-F
A14R127	0757-0421	4	1	RESISTOR 825 1% .125W F TC=0+-100	24546	C4-1/8-T0-825R-F
A14R128	0757-0290	5		RESISTOR 6.19K 1% .125W F TC=0+-100	19701	MF4C1/8-T0-6191-F
A14R129	0757-0290	5		RESISTOR 6.19K 1% .125W F TC=0+-100	19701	MF4C1/8-T0-6191-F
A14R130*	0757-0467	8	1	RESISTOR 121K 1% .125W F TC=0+-100	24546	C4-1/8-T0-1213-F
A14R131	0698-3429	2	1	RESISTOR 19.6 1% .125W F TC=0+-100	03888	PME55-1/8-T0-19R6-F
A14U1	1826-0092	3	1	IC OP AMP GP DUAL TO-99 PKC	28480	1826-0892
A14VR1	1902-0041	4	1	DIODE-ZNR 5.11V 5% DO-35 PD=.4W	28480	1902-0041
A14VR2	1902-0048	1	1	DIODE-ZNR 6.81V 5% DO-35 PD=.4W	28488	1902-0048
A14VR3	1902-0579	3	1	DIODE-ZNR 5.1V 5% PD=1W IR=10UA	28480	1902-0579
				h14 HISCELLANEOUS PARTS		
	08559-00010	8	1	COVER, LOG AMPLIFIER	28488	08559-00010

See introduction to this section for ordering information
*Indicates factory selected value

A14
LOG AMPLIFIER

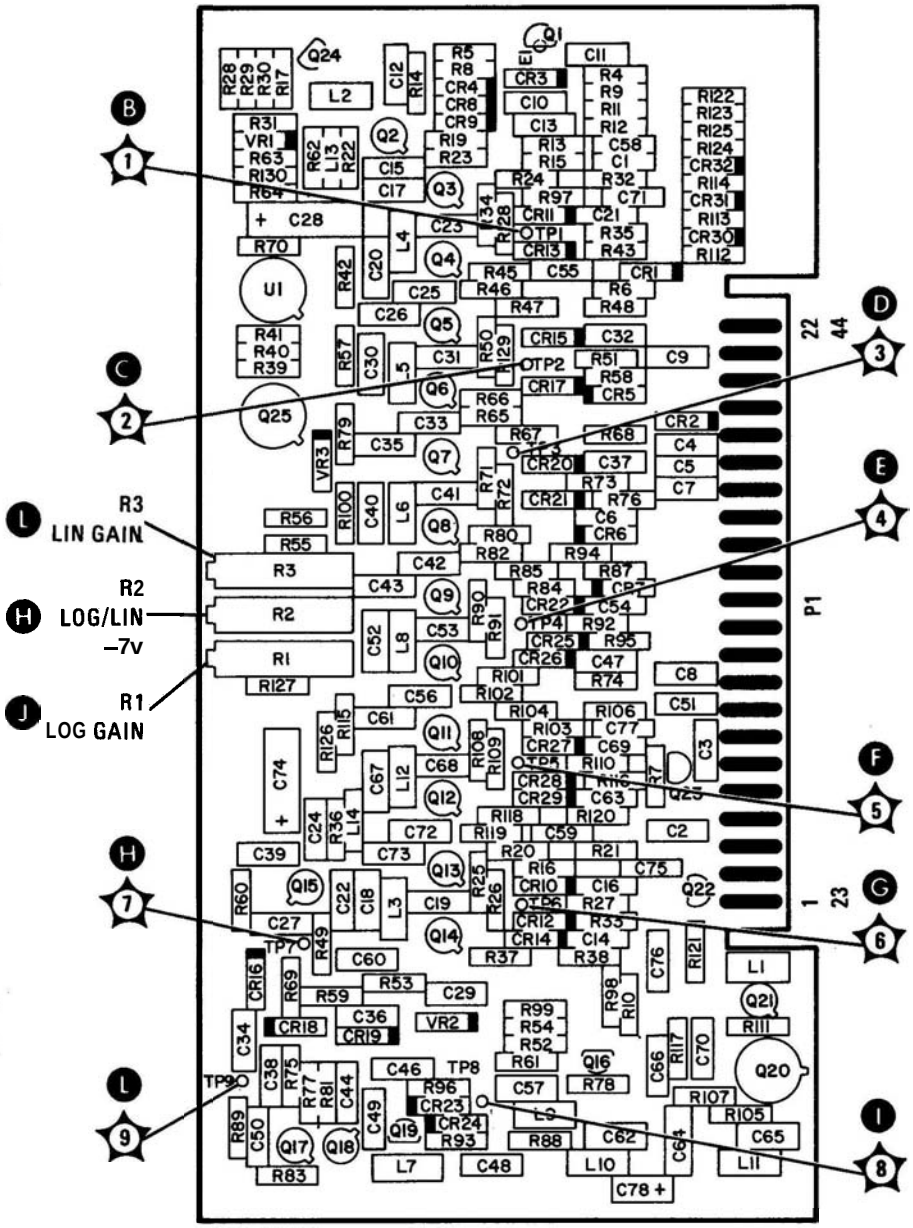

FIGURE 8-68. LOG AMPLIFIER ASSEMBLY A14, COMPONENT LOCATIONS (SERIAL PREFIX 2208A)

A14 LOG AMPLIFIER ASSEMBLY
08565-60111 (2 of 2)

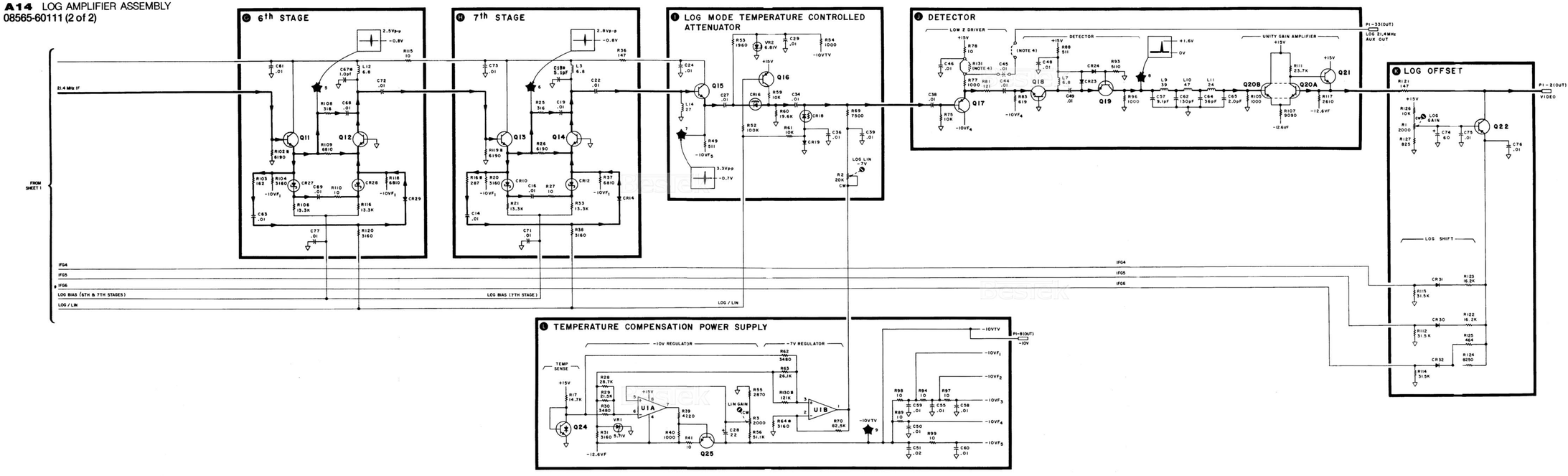

NOTES:

1. REFERENCE DESIGNATORS WITHIN THIS ASSEMBLY ARE ABBREVIATED. PREFIX ASSREVIATION WITH ASSEMBLY NUMBER FOR COMPLETE REFERENCE DESIGNATOR.
2. UNLESS OTHERWISE INDICATED: RESISTANCE IN OHMS (Ω) CAPACITANCE IN MICROFARADS (μF) INDUCTANCE IN MICROHENRIES (μH)
3. ASTERISK (*) INDICATES FACTORY SELECTED COMPONENT. NOMINAL VALUE IS SHOWN.
4. AUXILIARY LOG OUTPUT AS OPTION ONLY. C45, R131 AND JUMPER USED ONLY FOR OPTIONAL AUXILIARY LOG OUTPUT.
5. INPUT ATTEN CONTROL IS ACTUATED BY PUSHING IN ON THE CONTROL KNOB WHICH COUPLES INPUT ATTEN TO REFERENCE LEVEL.
6. INPUT ATTEN AND REFERENCE LEVEL CONTROLS ARE MECHANICALLY COUPLED TO PROVIDE TEN REFERENCE LEVEL SETTINGS FOR EACH INPUT ATTENUATION SETTING.
7. MNEMONIC TABLE:

MNEMONIC	DESCRIPTION
IFG4 IFG5 IFG6	IF GAIN CONTROL LINES
LOG/LIN	SELECTS EITHER LOG OR LINEAR

A14

SERIAL PREFIX: 2208A

FIGURE 8-69. LOG AMPLIFIER ASSEMBLY A14, SCHEMATIC DIAGRAM (2 OF 2) (SERIAL PREFIX 2208A)

A14 LOG AMPLIFIER ASSEMBLY
08565-60111 (1 of 2)

P1

PIN	SIGNAL	TO/FROM	FUNCTION BLOCK
1 23	GND	A16	M
2 24	VIDEO GND	A2 A16	M M
3 25	GND -12.6V	A16 P1-28	M M
4 26	GND	A16	M
5 27	GND +15V	A16 P1-29	M M
6 28	GND	A16	M
7 29	GND	A16	M
8 30	-10V GND	A2 A16	M M
9 31	GND LOG/LIN	A16 A2	M M
10 32	GND	A16	M
11 33	GND LOG 21.4 MHz AUX OUT	A16 NC	M M
12 34	GND	A16	M
13 35	GND	A16	M
14 36	GND	A16	M
15 37	GND	A16	M
16 38	GND IFG4	A16 A2	M M
17 39	GND IFG5	A16 A2	M M
18 40	GND IFG6	A16 A2	M M
19 41	GND	A16	M
20 42	GND	A16	M
21 43	GND	A16	M
22 44	GND 21.4 MHz IF	A16 A13	M M

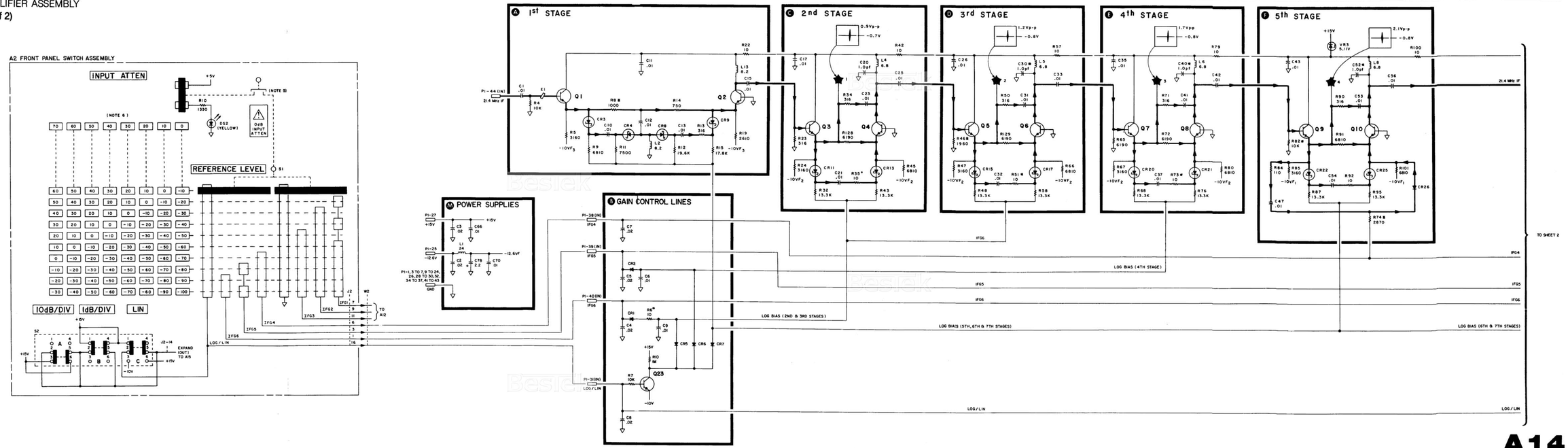

SERIAL PREFIX: 2208A

A14

FIGURE 8-69. LOG AMPLIFIER ASSEMBLY A14, SCHEMATIC DIAGRAM (1 OF 2) (SERIAL PREFIX 2208A)

Pages 8-191 and 8-199/8-200: MOTHERBOARD ASSEMBLY A16

Table 8-14. Motherboard Assembly A16, Replaceable Parts

2236A & Below	Change A16 to HP Part Number 08559-60066, Check Digit 0. Change A16C3 and A16C21 to HP Part Number 0160-2055, Check Digit 9, CAPACITOR-FXD .01UF +80-20% 100VDC CER. Change A16C22 to HP Part Number 0180-2154, Check Digit 1, CAPACITOR-FXD 1900UF +75-10% 15VDC AL. Delete A16Q1. Change A16W1 to HP Part Number 08559-60067, Check Digit 1, HARNESS ASSEMBLY, MAIN FRAME CONNECTOR. Change A16W2 to HP Part Number 08559-60008, Check Digit 0, CABLE ASSEMBLY, YIG.
2208A & Below	Change A16 to HP Part Number 08559-60020, Check Digit 6. Change A16W1 to HP Part Number 08559-60009, Check Digit 1, HARNESS ASSEMBLY, MAIN FRAME CONNECTOR. Delete the following: A16CR1, A16CR2, A16R10, and A16VR3.
1951A,1945A & Below	Delete A16C6, A16J3, and A16J4.

Figure 8-76. Motherboard Assembly A16, Component Locations

2236A & Below	Replace Figure 8-76 with new Figure 8-76 (SERIAL PREFIX 2236A) included ic this Manual Backdating supplement.
2208A & Below	Make the following changes to Figure 8-76 (SERIAL PREFIX 2236A): Delete CR1, CR2, R10, and VR3.
1951A,1945A & Below	Delete C6, 53, and 54.

Figure 8-77. Motherboard Assembly A16, Interconnect Diagram

2236A & Below	Replace Figure 8-77 with new Figure 8-77 (SERIAL PREFIX 2236A) included in this Manual Backdating supplement.
2208A & Below	Chacge A16 to HP Part Number 08559-60020. Make the following changes to Figure 8-77 (SERIAL PREFIX 2236A): Delete CR2, VR3, and the 927 line. Delete CR1 and the 8 line. Delete R10 and the 928 line.
1951A,1945A & Below	At pin 18 of XA10P1, delete C6 and 53. At XA10P2, delete 54 (CAL OUTPUT TO FRONT PANEL).

A16
MOTHERBOARD

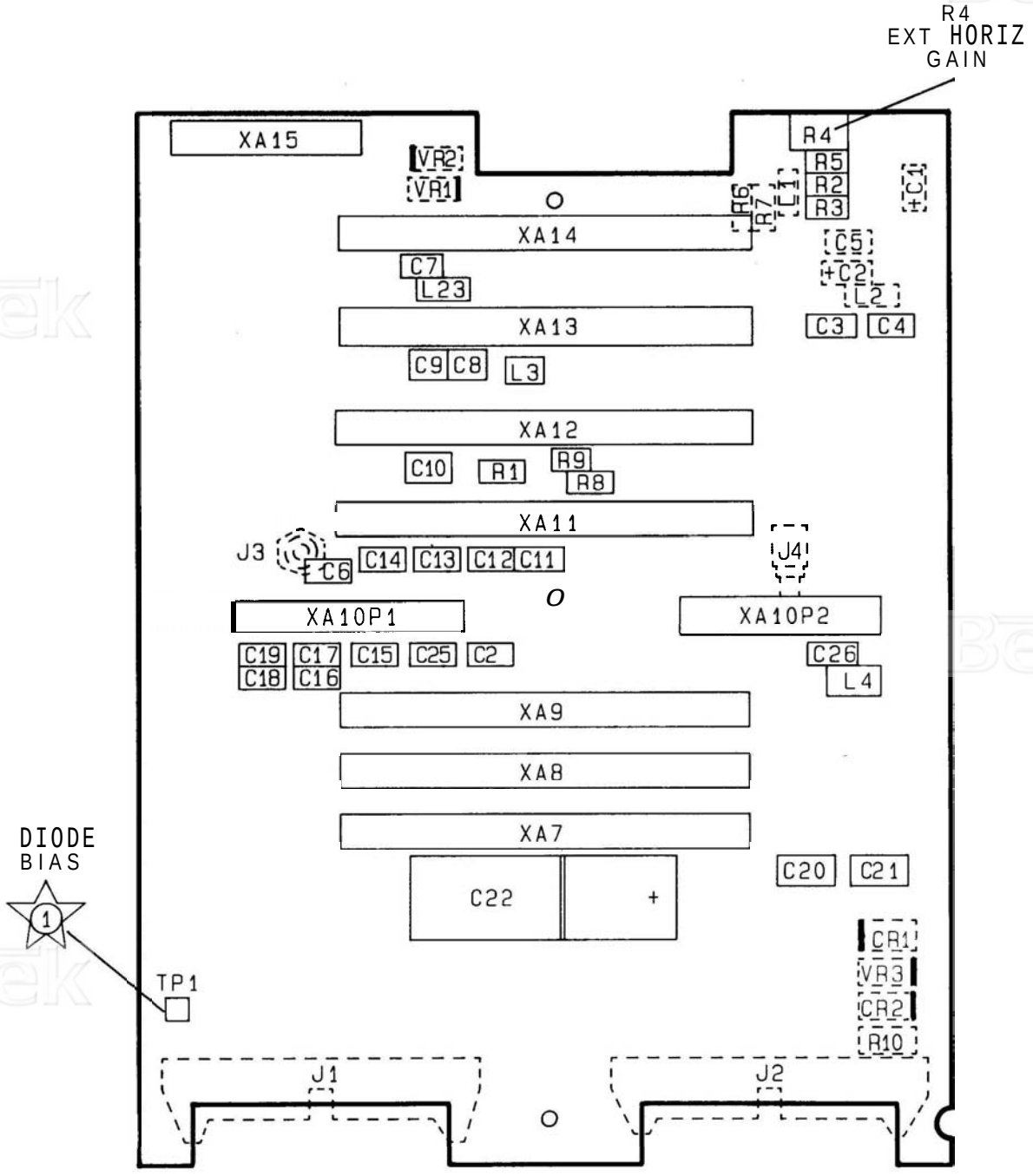

FIGURE 8-76. MOTHERBOARD ASSEMBLY A16, COMPONENT LOCATIONS (SERIAL PREFIX 2236A)

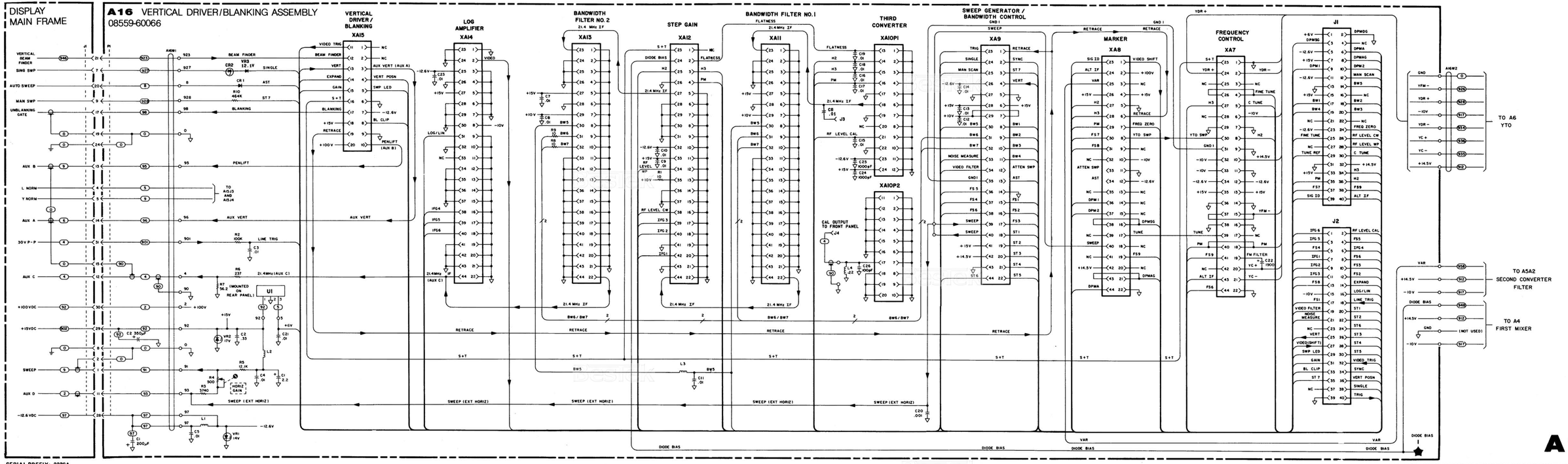
DISPLAY MAIN FRAME
A16 VERTICAL DRIVER/BLANKING ASSEMBLY
08559-60066
VERTICAL DRIVER / BLANKING XA15
LOG AMPLIFIER XA14
BANDWIDTH FILTER NO. 2 XA13
STEP GAIN XA12
BANDWIDTH FILTER NO. 1 XA11
THIRD CONVERTER XA10P1
XA10P2
SWEEP GENERATOR / BANDWIDTH CONTROL XA9
MARKER XA8
FREQUENCY CONTROL XA7
J1
J2
VERTICAL BEAM FINDER
SING SWP
AUTO SWEEP
MAIN SWP
UNBLANKING GATE
AUX B
L NORM
Y NORM
AUX A
30V P-P
AUX C
+100VDC
+15VDC
SWEEP
AUX D
-12.6VDC
BEAM FINDER
BLANKING
PENLIFT
AUX VERT
LINE TRIG
21.4MHz (AUX C)
RETRACE
S+T
SWEEP (EXT HORIZ)
DIODE BIAS
VAR
TO A6 YTO
TO A5A2 SECOND CONVERTER FILTER
TO A4 FIRST MIXER
A16
SERIAL PREFIX: 2236A
FIGURE 8-77. MOTHERBOARD ASSEMBLY A16, SCHEMATIC DIAGRAM (SERIAL PREFIX 2236A)

SECTION VIII
SERVICE

8-1. INTRODUCTION

8-2. This section provides instructions for troubleshooting and repairing the HP Model 8559A Spectrum Analyzer. It includes circuit descriptions, general servicing hints and information, parts identification illustrations and lists, block diagrams, component locations diagrams, and schematics.

WARNING

To troubleshoot and repair this instrument, it must be removed from the display mainframe and reconnected through an extender cable. Operating the spectrum analyzer outside the mainframe in this manner exposes high voltage points in the instrument that will, if contacted, cause personal injury. Maintenance and repair of this instrument should, therefore, be performed only by a skilled person who knows the hazards involved. Where maintenance can be performed without power applied, the power should be removed. When any repair is completed, be sure that all safety features are intact and functioning and that all necessary parts are connected to their positive grounds.

8-3. SCHEMATIC SYMBOLS, TERMINOLOGY, AND VOLTAGE LEVELS

8-4. Symbols and terminology used on the schematic diagrams are explained in Figure 8-1. Test conditions for the signal and dc voltage levels shown on the block and schematic diagrams are provided in Figure 8-2.

8-5. TEST EQUIPMENT

8-6. Test instruments and accessories used to maintain the spectrum analyzer are listed in Table 1-4. If the listed instrument is not available, another instrument that meets the required minimum specifications may be substituted.

8-7. MAJOR ASSEMBLY LOCATIONS

8-8. The major assembly location illustrations for the spectrum analyzer are located near the end of this section.

8-9. TROUBLESHOOTING

8-10. General Information

8-11. Troubleshooting is most easily accomplished by using the block diagram at the end of this section to follow the signal path. Once the problem is isolated to a particular circuit, the circuit description and schematic diagram can be used to locate the faulty component.

NOTE

When a part is replaced, adjustment of the affected circuitry is usually required. For adjustment procedures, refer to Section V.

CAUTION

Improper cleaning of the printed circuit board edge connectors can cause damage to the contact's gold plating, resulting in corrosion and intermittent electrical contact. Use only the recommended procedure.

8-12. Printed Circuit Board Edge Connector Contact Cleaning

MATERIALS:

- Lint-free cloth or equivalent (HP Part Number 9310-0039, Check Digit 3).
- Solution of 80% electronics-grade isopropyl alcohol and 20% water.
- Static-free work station.

PROCEDURE:

1. Dampen the cloth with the alcohol and water solution and scrub the edge connector contacts vigorously, using a circular motion. Polish one side of the board at a time until the contacts shine, keeping the cloth damp to dissolve contaminants and reduce static electricity.

2. Using a clean cloth, dry the contacts by wiping from their inside to outside edge. This prevents particles from building up on the contact edges.

CAUTION

Do not use erasers to clean the edge connectors They cause microscopic damage to the contact surface, removing the thin gold plating and exposing the nickel under-plating, which eventually corrodes. Erasers also leave a film on the contact and generate static electricity.

Do not use paper of any kind to clean the edge connector contacts. Paper or lint particles left on the edge contact surface can cause intermittent electrical connections.

Do not touch contact or trace surfaces with bare hands. Always handle the board by its edges.

SYMBOLS USED IN SCHEMATICS AND BLOCK DIAGRAMS

BASIC COMPONENT SYMBOLS

Variable Resistor: Clockwise rotation of shaft moves wiper towards end of resistor marked CW.

Electrolytic capacitor

Variable capacitor

Slide, toggle, or rocker switch

Ferrite bead (prevents high frequency parasitic oscillations)

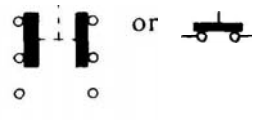

Pushbutton switch

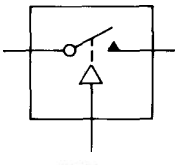

Relay

Crystal

Speaker

Pin Diode

Breakdown (zener) diode

Varactor Diode

Schottky diode

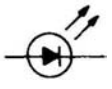

Light-emitting diode

Transistor, PNP

Transistor, NPN

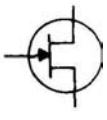

MOS – FET, N-Channel

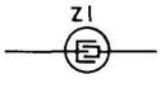

Surface Acoustic Wave Resonator (SAWR)

Indicates a factory-select component

Indicates shielding conductor for cables

Indicates a plug-in connection

Indicates a soldered or mechanical connection

Indicates a single pin of a PC board edge connector

FIGURE 8-1. SYMBOLS USED IN SCHEMATIC AND BLOCK DIAGRAMS (1 OF 4)

SYMBOLS USED IN SCHEMATICS AND BLOCK DIAGRAMS

BASIC COMPONENT SYMBOLS

Connection symbol indicating a Jack (except for PC board edge connectors)

Connection symbol indicating a Plug (except for PC board edge connectors)

Test Point: Terminal provided for test probe.

Measurement Point: Used to indicate a convenient point for measurement. No terminal provided for test probe.

Indicates wire or cable color code. Color code same as resistor color code. First number indicates base color, second and third numbers indicate colored stripes.

Earth ground

Instrument chassis ground. May be accompanied by a number or letter to specify a particular ground.

Screwdriver adjustment

Front-panel control

Jumper wire

COMMONLY USED ASSEMBLY AND CIRCUIT SYMBOLS

Oscillator

Mixer

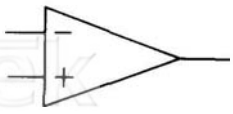

Operational amplifier

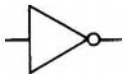

Inverter, buffer

Tuneable cavity

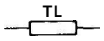

Transmission Line

FIGURE 8-1. SYMBOLS USED IN SCHEMATIC AND BLOCK DIAGRAMS (2 OF 4)

SYMBOLS USED IN SCHEMATIC AND BLOCK DIAGRAMS

BASIC LOGIC SYMBOLS

Distinctive-Shape Symbols

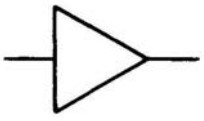	AMPLIFIER/BUFFER	Output is active when input is active.
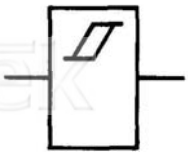	SCHMITT TRIGGER	Output changes abruptly as a fixed DC level is crossed by the input signal.
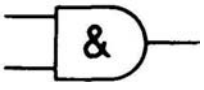	AND FUNCTION	Output is active only when all inputs are active.
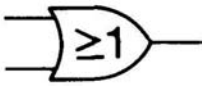	OR FUNCTION	Output is active when one or more inputs are active.
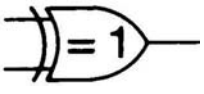	EXCLUSIVE-OR FUNCTION	Output is active when only one input is active.
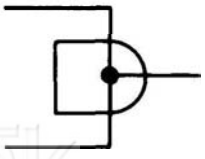	WIRED AND FUNCTION	Two or more elements are joined together to achieve the effect of an AND function.
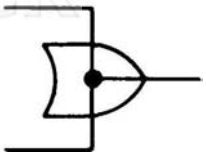	WIRED OR FUNCTION	Two or more elements are joined together to achieve the effect of an OR function.

FIGURE 8-1. SYMBOLS USED IN SCHEMATIC AND BLOCK DIAGRAMS (3 OF 4)

SYMBOLS USED IN SCHEMATIC AND BLOCK DIAGRAMS

BASIC LOGIC SYMBOLS

Indicator Symbols (positive logic assumed)

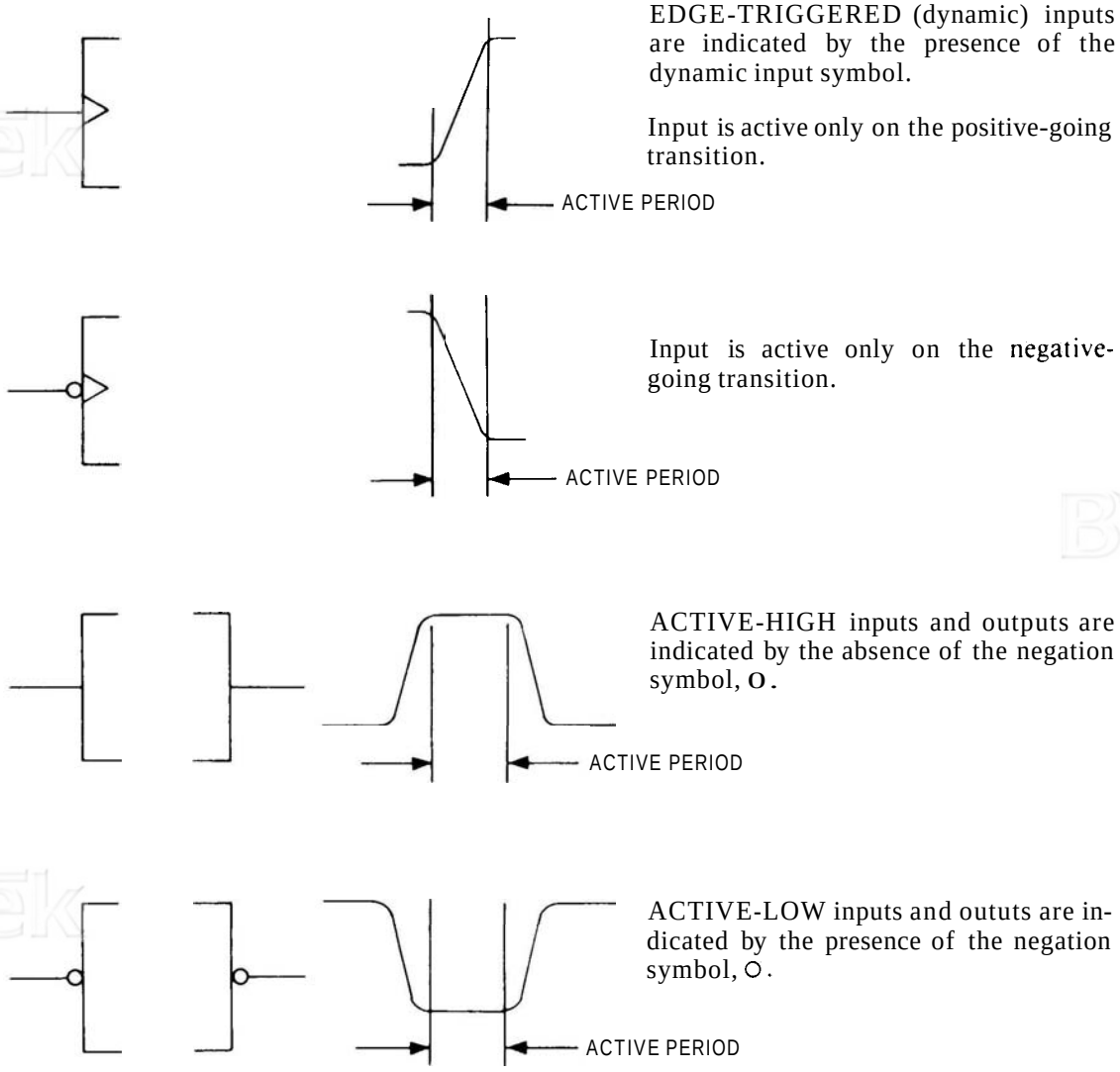

EDGE-TRIGGERED (dynamic) inputs are indicated by the presence of the dynamic input symbol.

Input is active only on the positive-going transition.

Input is active only on the negative-going transition.

ACTIVE-HIGH inputs and outputs are indicated by the absence of the negation symbol, ○.

ACTIVE-LOW inputs and oututs are indicated by the presence of the negation symbol, ○.

FIGURE 8-1. SYMBOLS USED IN SCHEMATIC AND BLOCK DIAGRAMS (4 OF 4)

Nominal power levels, voltages, and waveforms shown on schematic diagrams were measured using the test setup shown below. Note that signal characteristics shown on schematic diagrams are provided as a troubleshooting aid only. They should not be used for making instrument adjustments.

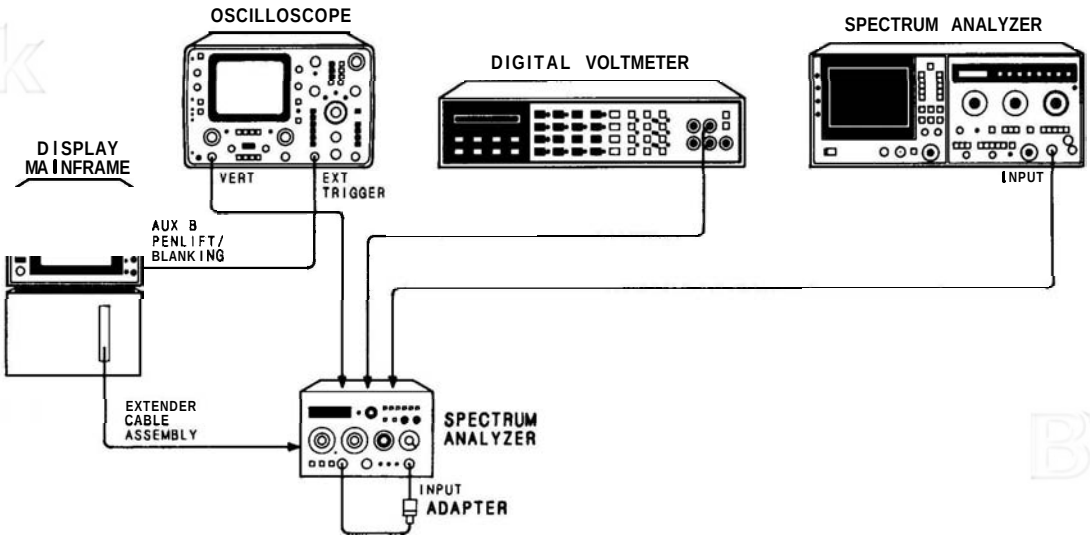

EQUIPMENT:

Oscilloscope (with 10:1 probe)	HP 1741A
Spectrum Analyzer	8569B
Digital Voltmeter	HP 3456
Extender Cable Assembly	HP 5060-0303
Adapter, Type N to BNC (2 required)	HP 1250-0780

FIGURE 8-2. CONDITIONS FOR SCHEMATIC DIAGRAM MEASUREMENTS (1 OF 2)

PROCEDURE:

1. Set HP 8559A Spectrum Analyzer controls as follows:

TUNING	.035 GHz
FREQ SPAN/DIV	1 MHz
RESOLUTION BW	300 kHz
INPUT ATTEN	0 dB
REFERENCE LEVEL	–10 dBm
REFERENCE LEVEL FINE	0
Amplitude Scale	10 dB/DIV
SWEEP TIME/DIV	AUTO
SWEEP TRIGGER	FREE RUN
VIDEOFILTER	OFF
BL CLIP	OFF
SIGIDENT	OFF
ALT IF	OFF

2. Connect equipment as shown. Set signal generator for a 35 MHz, –10 dBm output signal. Center the Cal signal on the display and adjust for top graticule.

3. Using board extenders when necessary, check voltages and waveforms indicated on schematic diagrams. Trigger oscilloscope on negative transition of AUX B PENLIFT/BLANKING signal from rear of display mainframe.

4. To measure RF power levels, set RESOLUTION BW control to 3 MHz and FREQ SPAN/DIV to 0 (zero span). The first LO is not swept in zero span, allowing signal levels to be checked with a second spectrum analyzer (use adapter cables as necessary). DO NOT use a power meter (harmonics and LO signals will contribute to give erroneous levels).

FIGURE 8-2. CONDITIONS FOR SCHEMATIC DIAGRAM MEASUREMENTS (2 OF 2)

THE HP 8559A SPECTRUM ANALYZER THEORY OF OPERATION

General Information

The HP 8559A is a wideband spectrum analyzer plug-in module for use with either the HP 180 series or HP 853A display mainframes. It tunes from 10 MHz to 21 GHz and displays frequency spans as wide as 9 GHz (in bands 5 and 6) and as narrow as 100 kHz (in band 1). A zero span feature enables the analyzer to operate as a tunable, fixed-frequency receiver. Resolution bandwidths of 3 MHz to 1 kHz are selectable in a 1-3-10 sequence. CRT display calibration can be maintained by coupling the frequency span, resolution bandwidth, and video filter to an automatic sweep time control. A five-LED numerical display allows direct readout of the display center frequency or the tunable marker frequency.

The adjustable reference-level control is calibrated to allow direct readout of amplitudes ranging from –111 to +30 dBm. Continuous wave (CW) signals at or below the Reference Level, the top display graticule, are automatically below the analyzer's gain compression specification. Dynamic range is greater than 70 dB.

The resolution bandwidth and frequency span controls can be locked together to function as a "zoom" control. Signal identification, in spans from 100 kHz to 10 MHz per division, and an alternate IF are also available. This latter feature eliminates problems caused by IF feedthrough (baseline lift) and allows measurement of all signals within the frequency range of the analyzer.

The typical spectrum analyzer comprises three main sections (see Figure 8-3): the RF section, the IF section, and the display section. Since it is a plug-in designed to work with a display mainframe, the HP 8559A houses only the RF and IF sections. The display and power supply are contained in the mainframe.

RF Section

The HP 8559A RF section resembles a triple-conversion superheterodyne receiver; input signal frequencies are converted three times before processing for display. Triple conversion makes possible wide frequency coverage and permits filtering and amplification at more easily controlled frequencies.

RF Attenuator. The stepped RF Input Attenuator Assembly A3, at the input to the RF section, attenuates the input in precise 10 dB steps from 0 to 70 dB. Precise and repeatable attenuation and gain in the signal path are necessary to preserve amplitude calibration and direct reading of signal amplitudes on the CRT. RF attenuator adjustment establishes the optimum signal level applied to the First Mixer Assembly A4.

First Mixer. Within the First Mixer Assembly A6, the incoming signal mixes with the first local oscillator, generating the first IF. The first converter consists of a single microwave diode, a 4.8 GHz Low-Pass Filter Assembly FL1 contained in a short RF cable, and – housed in the Second Converter Assembly A5 – a 3 GHz bandpass filter with a 17 to 23 MHz bandwidth.

First LO. A YIG-Tuned Oscillator Assembly A6, or YTO, is used as the first LO. YIG, yttrium-iron-garnet, is a ferro-magnetic material which is polished into a small sphere and precisely oriented in a magnetic field. Changes in this magnetic field alter the frequency generated by the YTO. For the YTO in the HP 8559A, a frequency range of 3.01 GHz to 6.04 GHz is used. Voltage control of the magnetic field surrounding the YIG sphere allows the analyzer to be swept or tuned within these frequency limits. A control voltage, derived from the sweep generator, tunes the YTO in sync with the horizontal deflection of the CRT beam. A tuning voltage offsets the sweep to establish the center frequency. Voltage control of the analyzer's frequency is convenient, since low frequency circuits, like operational amplifiers and transistors, can generate and modify the control voltage.

Second Converter. The Second Converter Assembly A5 houses the 3 GHz bandpass filter, the second mixer, and the second LO. The 3 GHz filter uses the resonant characteristics of three precisely machined cavities, or

holes, in the aluminum block housing to filter the first IF. A fourth cavity is used as the resonant circuit for the second LO, which operates at one of two fixed frequencies. After mixing with the first IF, the second LO produces the second IF at 321.4 MHz.

The need for operating the second LO at two separate frequencies becomes apparent when measuring a signal at or near the first IF frequency, 3 GHz. The signal passes through the first mixer and first IF unaffected by first LO tuning and appears as an equally strong signal at all frequencies. This response is called IF feedthrough or baseline lift. Changing the frequency of the second LO shifts the feedthrough response away from the frequency being measured by effectively altering the first IF. Two LO frequencies may be selected with the ALT IF control, 2.6861 GHz (regular IF) and 2.6711 GHz (alternate IF). The LO shift (15 MHz) is reflected in the first IF and fits within the 17 MHz to 23 MHz 1 dB passband of the 3 GHz bandpass filter.

Third Converter. The Third Converter Assembly A10 contains the second IF amplifier, the second IF bandpass filters, the third mixer, the third LO, and the third IF filters and compensation amplifiers. The second IF amplifier consists of a single-transistor amplifier with a 321.4 MHz bandpass filter at its input. It provides about 15 dB of gain before passing the signal to a second 321.4 MHz bandpass filter at its output. The net 1 dB bandwidth is 6 MHz to 9 MHz, narrow enough to reject the second mixer's image frequency. The double-balanced third mixer produces sum and difference frequencies, as do other mixers, but rejects input and LO frequencies, simplifying subsequent filtering. Two transistors form the third LO, fixed at 300 MHz, which, when mixed with the 321.4 MHz second IF, produces a difference frequency at the final IF, 21.4 MHz.

Three conversions or frequency translations are necessary before the input signal reaches the final IF, where the analyzer's major bandpass filtering and calibrated gains occur. The circuits used in the final IF are more easily controlled at 21.4 MHz than they would be at the higher input frequencies. The RF section's function is to down-convert the input signal accurately so the analyzer can control and display it.

Harmonic Mixing. To extend the frequency range of the HP 8559A, harmonic mixing is employed. Instead of limiting the first mixer input to the fundamental range of the first LO (3.01 GHz to 6.04 GHz), harmonics of the LO are allowed to mix with the incoming signal. Each of the six FREQUENCY BAND GHz buttons on the front panel selects a different mixing mode. A mixing mode is characterized by the number of the LO harmonic used and the relationship of the incoming signal frequency to the LO frequency. For example, in the first band (.01 to 3 GHz) the incoming signal is below the frequency of the LO. If the incoming signal is 2 GHz, the LO must tune to 5 GHz to produce a difference frequency at the required IF, 3 GHz. This band is characterized as the "1 – " mixing mode. This relationship is expressed by the fundamental mixing equation:

$$F_{LO} - F_{IN} = F_{IF}$$

Band two (6 to 9 GHz) uses the "1 + " mixing mode. In this band, the incoming signal frequency is higher than the first LO frequency. Now an 8 GHz incoming signal mixes with the 5 GHz first LO, producing an IF response at 3 GHz. The mixing equation also reflects this change by becoming:

$$F_{IN} - F_{LO} = F_{IF}$$

Higher frequency bands are realized by using the second harmonic (6 to 12 GHz) or the third harmonic (9 to 18 GHz) of the first LO. Adjusting the dc bias of the first mixer diode enhances operation at these frequencies. As with the fundamental mixing mode, each harmonic mode has two possible frequency bands creating a total of six bands: 1+, 1–, 2+, 2–, 3+, and 3–. Section 3, Figure 17 shows the tuning curves for the six mixing modes and the LO fundamental. The mixing equations for the harmonic mixing modes are:

$$F_{,,} - NF_{LO} = F_{,,} \quad \text{(for plus modes)}$$

and

$$NF_{,,} - F_{IN} = F_{,,} \quad \text{(for minus modes)}$$

where N is the harmonic number of the mode.

Regardless of which harmonic is used for mixing, image frequencies can create problems. Image frequencies occur when a signal not in the band being viewed mixes with the LO to produce a response. It is possible to be in the 1– band and have a signal at 5 GHz produce a response at 2 GHz; the opposite can occur in the 1+ band. As can be seen, it is necessary to be able to differentiate these signals. In the HP 8559A, this is the function of the signal identifier.

Signal Identifier. Several methods of eliminating image responses are used in spectrum analyzers: low-pass filters, preselectors, and signal identifiers. Low-pass filters eliminate all upper out-of-band frequencies from the mixer; this works well for single band analyzers. A preselector (a YIG-tuned bandpass filter) tracks the LO frequency; this allows multi-band operation, but can degrade input sensitivity. The signal identifier allows identification of in-band signals without losses in sensitivity. This is the scheme used in the HP 8559A.

Signal identification simultaneously shifts the display frequency down 1 MHz and decreases the display amplitude about 5 dB. If the signal is an image, it will do something other than shift down 1 MHz. The SIG IDENT button on the front panel activates this function by simultaneously shifting the frequency of the second LO and varying the level of the video signal during alternate sweeps.

IF Section

The IF section comprises the third IF filters and amplifiers, and the step gain and logarithmic amplifiers. It also includes the video detector, video filters, and video amplifiers. The IF section processes the 21.4 MHz output of the Third Converter Assembly A10 and applies it to the vertical deflection circuitry in the display mainframe.

The 21.4 MHz third converter output is processed by the Bandwidth Filter No. 1 Assembly A11, the Step Gain Assembly A12, the Bandwidth Filter No. 2 Assembly A13, and, finally, the Log Amplifier Assembly A14. Each assembly occupies a separate printed circuit board, which is shielded by extrusions mounted on the Motherboard Assembly A16.

Bandwidth Filters. Bandwidth Filter No. 1 Assembly A11 and Bandwidth Filter No. 2 Assembly A13 are identical; each contains two synchronously-tuned filter poles isolated by buffer amplifiers. Synchronously-tuned filter poles have identical center frequencies, unlike stagger-tuned poles. The bandwidth of these poles, varying from 3 MHz to 1 kHz, is changed simultaneously by the front panel RESOLUTION BW control. Because the variable bandwidths are so much narrower than any of the RF section bandpass filters, the RESOLUTION BW control setting determines the analyzer's overall bandwidth. Parallel LC filters provide bandwidths from 3 MHz to 100 kHz. Crystal filters provide the narrow, 30 kHz to 1 kHz, bandwidths.

Step Gain Amplifier. Located between the bandwidth filter assemblies, the Step Gain Assembly A12 provides precise and selectable gain in three stages, a 10 dB stage followed by two 20 dB stages. Each stage can be turned "on" for full gain or "off" for unity gain. By turning on the amplifiers in combination, gains of 0 to 50 dB may be selected. This action is performed by the REFERENCE LEVEL control. Concentric with the REFERENCE LEVEL knob is the REF LEVEL FINE potentiometer, which controls the 0 to 12 dB PIN diode attenuator. In addition to the gain circuits described, circuitry providing biasing to the first mixer diode and flatness compensation to the third converter is included on the Step Gain Assembly A12.

Logarithmic Amplifier. The second bandwidth filter is followed by the Log Amplifier Assembly A14. The gain of this amplifier is a logarithmic function of the input signal, which allows a greater range of signal amplitudes to be simultaneously displayed on the CRT. This logarithmic amplification of the signal before detection results in the vertical display axis being calibrated in decibels (relative to a milliwatt), rather than volts. Linear amplification from 0 dB to 40 dB may also be selected from the front panel.

The video detector, located on the Log Amplifier Assembly A14, is basically a half-wave rectifier and a filter. This circuit produces a voltage proportional to the signal level, called the video signal. This signal passes through a video filter and a vertical deflection amplifier before leaving the HP 8559A.

TROUBLESHOOTING HINTS

Begin troubleshooting by measuring the mainframe-supplied voltages as close to the HP 8559A as possible. The Vertical Driver/Blanking Assembly A15 offers three test points (A15TP6, A15TP7, A15TP8) to make the measurements. The +100V supply is available at A15TP6, the +15V supply at A15TP7, and the –12.6V supply at A15TP8. If any of these voltages are low, refer to the mainframe Operation and Service manual and make the necessary adjustments before continuing. Common symptoms caused by low mainframe-supplied voltages include: increased residual FM (caused by a low +15V supply) and poor frequency accuracy or intermittent lockup of the frequency display LED's (also caused by a low power supply).

Residual FM

Residual FM is a short-term jitter or an undesired frequency modulation of a local oscillator (LO). It appears as noise riding on the displayed trace and may be random or cyclical (usually as a function of the line frequency). The following procedure is a guide for isolating a source of residual FM. Further troubleshooting hints concerning residual FM are included following the circuit descriptions of the indicated assemblies.

Set HP 8559A controls as follows:

FREQUENCY BAND GHz	.01 – 3
TUNING	.010 GHz
FREQ SPAN/DIV	0
RESOLUTION BW	300 kHz
INPUT ATTEN	0 dB
REFERENCE LEVEL	–10 dB
REFLEVELFINE	0
Amplitude Scale	10 dB/DIV
SWEEP TIME/DIV	AUTO
SWEEPTRIGGER	OFF
VIDEOFILTER	OFF
BLCLIP	OFF
SIGIDENT	OFF
ALT IF	OFF

- Verify that the mainframe supply voltages are correct at the Vertical Driver/Blanking Assembly A15 of the HP 8559A by checking the voltages at A15TP6, A15TP7, and A15TP8.

- Use a second spectrum analyzer to check each LO of the HP 8559A for FM.
  First LO: check at the HP 86559A front-panel RF input jack with test analyzer tuned to about 3 GHz (LO power is –8 dBm ±3 dBm).
  Second LO: check at A5J3 on Second Converter Assembly A5.
  Third LO: check at A10J1, the 300 MHz output on Third Converter Assembly A10.

- If the source of FM is the first LO, check the Frequency Control Assembly A7 and the YIG-Tuned Oscillator Assembly A6.

- If the source of the FM is the second LO, short A5A2TP1 to ground while observing the second LO with the second spectrum analyzer. This isolates the possible source of FM to the Second Converter Assembly A5 by removing the varactor bias voltage. Note that removing this bias voltage will cause the second LO frequency to shift. If FM is still present, check the Second Converter Assembly A5 as the source. If the FM disappears, check the bias voltage source on the Marker Board Assembly A8.

- If the source of the FM is the third LO, check the Third Converter Assembly A10.

DPM Accuracy

The following is a guide to troubleshooting poor DPM accuracy. Further information is included following the circuit descriptions of the indicated assemblies.

- Check +14.5V supply on the Frequency Control Assembly A7 (A7TP3).
- Perform and verify Frequency Display Adjustment (Paragraph 5-30).
- Verify Tuning Accuracy (Paragraph 4-12).
- Check Marker Board Assembly A8.
- Check frequency accuracy of first and second local oscillators.
  First LO: DPM inaccuracies become worse as the higher bands are selected (i.e., increases in harmonic mixing mode).
  Second LO: DPM inaccuracies are constant in all bands.

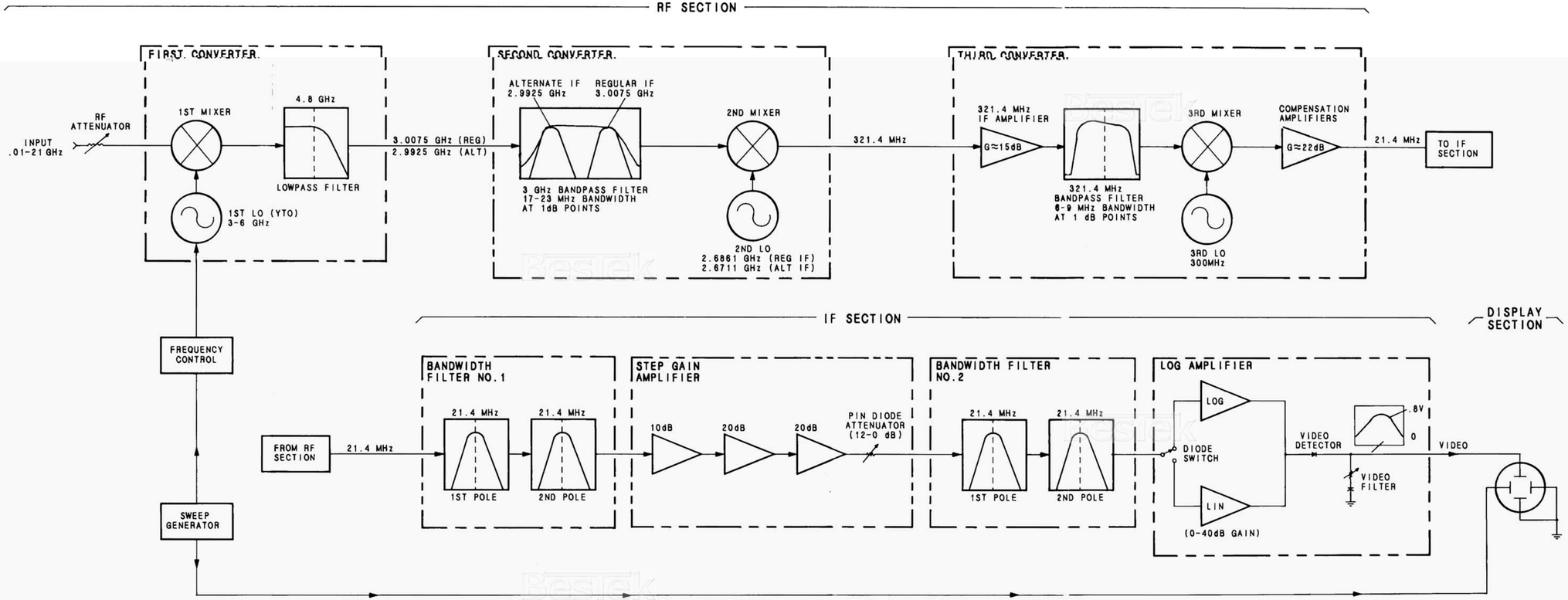

FIGURE 8-3. HP 8559A, SIMPLIFIED BLOCK DIAGRAM

DIGITAL PANEL METER ASSEMBLY A1, CIRCUIT DESCRIPTION

The Digital Panel Meter (DPM) Assembly A1A1/A1A2 is a dc voltmeter that measures a tuning voltage from Marker Assembly A8, and converts it to a front-panel frequency readout. The DPM electronics are contained on two assemblies: the DPM Display Assembly A1A1 and the DPM Driver Assembly A1A2.

DPM Display Assembly A1A1

The DPM Display Assembly comprises five seven-segment displays with Darlington-transistor switches, Q1 through Q5. The seven-segment displays (DS1 through DS5) are the common-cathode type. The cathode of a display is pulled negative (to about −10.5V) when the Darlington-transistor switch associated with it is turned on. With the cathode at a negative potential, the output of A1A2U4 can light the display segments. The transistor switches are strobed so the displays light sequentially. The refresh rate is determined by the clock (block C) and is fast enough (about 300 Hz) that the displays appear to be lit simultaneously.

DPM Driver Assembly A1A2

Contained on the DPM Driver Assembly A1A2 are the analog-to-digital converter, power supplies, and display interface circuits. Analog processor IC (U2) and digital processor IC (U3) are each one-half of an analog-to-digital converter (ADC). Analog comparator circuits in U2 control counter logic in U3. To accomplish the analog-to-digital conversion, U2 and U3 interact on three control lines: the M/Z (measure/zero logic) line, the COMP (comparator) line, and the U/D (up/down) line. The ADC, U3, produces two outputs. The first comprises five sequential four-line BCD outputs that are fed to BCD-to-seven-segment converter U4. The second consists of five sequential digit strobes that are fed to Darlington-transistor switches A1A1Q1 through A1A1Q5 on the DPM Display Assembly A1A1.

The input signal applied across connector pins J1-3 and J1-6 of the DPM Driver Assembly A1A2 is a dc level of 0V to −4V, representing an instrument tuning-range of 0 to 20 GHz (a 1V change of the input level represents a tune frequency change of 5 GHz). This 0V to −4V input signal is divided by precision resistors R33 and R27, providing a 0V to −2.000V signal across pins 2 and 15 of the analog processor IC, U2.

Transistors Q1, Q2, and Q9 interface the "sign/or/ur" (sign/over-range/under-range) output of U3 with segment "g" of numeric display A1A1DS5. Transistor Q2 and CR2 provides a "wired AND" function so that the minus sign is shown only in the most-significant-digit position (when both "D5" and "sign/or/ur" are high). Transistor Q1 serves to shift the signal level and Q9 supplies drive to the segment when a minus sign is displayed.

Field-effect transistor Q8 and its associated circuitry form a Colpitts oscillator that provides a clock of about 225 kHz. Inductor L1 and the series combination of C1 and C2 determine the nominal clock frequency.

Power Supplies and Reference (G) (A)

The power supply circuitry provides the necessary voltage reduction, protection, and filtering for the dc supply voltages: +12V, −12.6V, and +5V. The supply voltages are filtered as they enter the board to reduce interference between the DPM and the rest of the instrument. The +15V supply is used to derive the +12V supply and the +5V supply. Zener diode VR1 is used to reduce the +15V supply to +12V, while regulator U8 reduces the +15V supply to +5V. The −12.6V supply is filtered to offer two supply lines: $-12.6VF_1$ and $-12.6VF_2$. Operational amplifier U7 and its associated circuitry provide a constant dc voltage reference of approximately +6.2V to the analog IC, U2.

Display Interface (E)

During the period the DPM drive input is being converted, the BCD output circuitry in U3 is shut off. Once the conversion in U2 and U3 is complete, the four-line BCD is sent to U4 where it is converted to a seven-line (segment) drive. This seven-line output from U4 is fed in parallel to the displays on the Display Assembly A1A1. Coincident with the BCD-to-seven-segment conversion, U3 supplies a digit strobe drive that, by turning on one of the DPM Display Assembly A1A1 transistors (A1A1Q1 – A1A1Q5), activates one of the seven-segment displays.

Multiplexed BCD data from the digital processor IC (U3) are level shifted by transistors Q3, Q4, Q5, and Q6 and decoded by the BCD-to-seven-segment decoder-driver IC, U4. The decoder-driver sinks the current that drives the paralleled LED display segments on the DPM Display Assembly A1A1. The digit strobe outputs from U3 are level shifted by Q7, A11, A12, Q13, and Q14 and subsequently drive the Darlington-transistor switches A1A1Q1 through A1A1Q5 on the DPM Display Assembly A1A1.

DIGITAL PANEL METER ASSEMBLY A1, TROUBLESHOOTING

Check supply and reference voltages first.

Display digits freeze intermittently: Be sure the clock oscillator signal goes at least –7V negative and appears as in Figure 8-4. Low gain (Gm) of A1A2Q8 is the most probable cause for failure. Resistor A1A2R1 is factory selectable; increasing its value increases the amplitude of the clock output,

Least Significant Digit (LSD) dithers: A1A2U2 is the most probable cause; however, noise from A1A2R24, A1A2R25, or A1A2C5 also causes this symptom.

The same segment in each digit does not light: A1A2U4 failure.

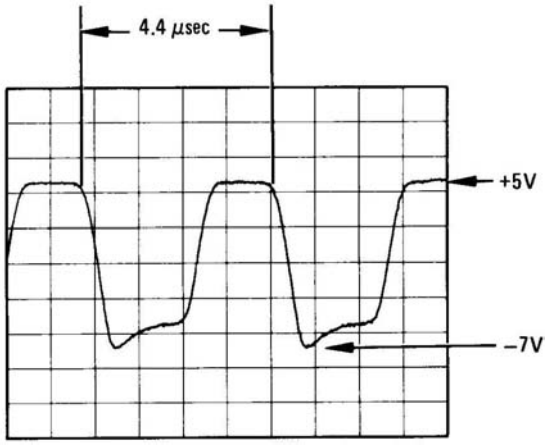

FIGURE 8-4. DPM CLOCK OUTPUT

TABLE 8-1. DIGITAL PANEL METER ASSEMBLY A1, REPLACEABLE PARTS (1 OF 2)

Reference Designation	HP Part Number	CD	Qty	Description	Mfr Code	Mfr Part Number
A1				DIGITAL PANEL METER ASSEMBLY		
A1A1	08559-60079	5	1	DIGITAL PANEL METER DISPLAY ASSEMBLY	28480	08559-60079
A1A1DS1	1990-0693	7	5	DISPLAY-NUM-SEG 1-CHAR .3 H	28480	1DS1-3533
A1A1DS2	1990-0693	7		DISPLAY-NUM-SEG 1-CHAR .3-H	28480	1DS1-3533
A1A1DS3	1990-0693	7		DISPLAY-NUM-SEG 1-CHAR .3-H	28480	1DS1-3533
A1A1DS4	1990-0693	7		DISPLAY-NUM-SEG 1-CHAR .3-H	28480	1DS1-3533
A1A1DS5	1990-0693	7		DISPLAY-NUM-SEG 1-CHAR .3 H	28480	1DS1-3533
A1A1Q1	1854-0472	2	5	TRANSISTOR NPN SI DARL PD=500MW	04713	MPS-A14
A1A1Q2	1854-0472	2		TRANSISTOR NPN SI DARL PD=500MW	04713	MPS-A14
A1A1Q3	1854-0472	2		TRANSISTOR NPN SI DARL PD=500MW	04713	MPS-A14
A1A1Q4	1854-0472	2		TRANSISTOR NPN SI DARL PD=500MW	04713	MPS-A14
A1A1Q5	1854-0472	2		TRANSISTOR NPN SI DARL PD=500MW	04713	MPS-A14
A1A1XDS1	1200-0834	5	5	SOCKET-IC 10-CONT DIP DIP-SLDR	28480	1200-0834
A1A1XDS2	1200-0834	5		SOCKET-IC 10-CONT DIP DIP SLDR	28480	1200-0834
A1A1XDS3	1200-0834	5		SOCKET-IC 10-CONT DIP DIP-SLDR	28480	1200-0834
A1A1XDS4	1200-0834	5		SOCKET-IC 10-CONT DIP DIP SLDR	28480	1200-0834
A1A1XDS5	1200-0834	5		SOCKET-IC 10-CONT DIP DIP-SLDR	28480	1200-0834
A1A2	08559-60078	4	1	DPM DRIVER ASSEMBLY	28480	08559-60078
A1A2C1	0160-3751	4	2	CAPACITOR-FXD 2200PF +-5% 50VDC CER	28480	0160-3751
A1A2C2	0160-3751	4		CAPACITOR-FXD 2200PF +-5% 50VDC CER	28480	0160-3751
A1A2C3	0160-3661	5	1	CAPACITOR-FXD .1UF +-5% 50VDC MET-POLYC	28480	0160-3661
A1A2C4	0140-0200	3	1	CAPACITOR-FXD 390PF +-5% 300VDC MICA	72136	DM15E391J0300WV1CR
A1A2C5	0160-2220	0	1	CAPACITOR-FXD 1200PF +-5% 300VDC MICA	28480	0160-2220
A1A2C6	0180-0197	8	2	CAPACITOR-FXD 2.2UF+-10% 20VDC TA	56289	150D225X9020A2
A1A2C7	0180-1746	5	2	CAPACITOR-FXD 15UF+-10% 20VDC TA	56289	150D156X9020B2
A1A2C8	0180-1746	5		CAPACITOR-FXD 15UF+-10% 20VDC TA	56289	150D156X9020B2
A1A2C9	0180-0291	3	2	CAPACITOR-FXD 1UF+-10% 35VDC TA	56289	150D105X9035A2
A1A2C10	0180-0291	3		CAPACITOR-FXD 1UF+-10% 35VDC TA	56289	150D105X9035A2
A1A2C11	0180-0197	8		CAPACITOR-FXD 2.2UF+-10% 20VDC TA	56289	150D225X9020A2
A1A2C12	0180-3116	1	1	CAPACITOR-FXD 6.8UF+-10% 35VDC TA	56289	153D685X9035B2
A1A2C13	0160-4004	8	1	CAPACITOR-FXD .1UF +-20% 50VDC CER	28480	0160-4004
A1A2C14	0160-3402	2	1	CAPACITOR-FXD 1UF +-5% 50VDC MET-POLYC	28480	0160-3402
A1A2C15	0180-2144	9	1	CAPACITOR-FXD 200UF+75-10% 25VDC AL	56289	30D207G025DH2
A1A2CR1	1901-0050	3	3	DIODE-SWITCHING 80V 200MA 2NS DO-35	28480	1901-0050
A1A2CR2	1901-0050	3		DIODE-SWITCHING 80V 200MA 2NS DO-35	28480	1901-0050
A1A2CR3	1901-0050	3		DIODE-SWITCHING 80V 200MA 2NS DO-35	28480	1901-0050
A1A2J1	1251-4797	4	1	CONNECTOR 10-PIN M POST TYPE	28480	1251-4797
A1A2L1	08559-80010	6	1	INDUCTOR, TOROID	28480	08559-80010
A1A2L2	9140-0129	1	2	INDUCTOR RF-CH-MLD 220UH 5% .166DX.385LG	28480	9140-0129
A1A2L3	9140-0137	1	1	INDUCTOR RF-CH-MLD 1MH 5% .2DX.45LG Q=60	28480	9140-0137
A1A2L4	9140-0129	1		INDUCTOR RF-CH-MLD 220UH 5% .166DX.385LG	28480	9140-0129
A1A2Q1	1853-0020	4	11	TRANSISTOR PNP SI PD=300MW FT=150MHZ	28480	1853-0020
A1A2Q2	1853-0020	4		TRANSISTOR PNP SI PD=300MW FT=150MHZ	28480	1853-0020
A1A2Q3	1853-0020	4		TRANSISTOR PNP SI PD=300MW FT=150MHZ	28480	1853-0020
A1A2Q4	1853-0020	4		TRANSISTOR PNP SI PD=300MW FT=150MHZ	28480	1853-0020
A1A2Q5	1853-0020	4		TRANSISTOR PNP SI PD=300MW FT=150MHZ	28480	1853-0020
A1A2Q6	1853-0020	4		TRANSISTOR PNP SI PD=300MW FT=150MHZ	28480	1853-0020
A1A2Q7	1853-0020	4		TRANSISTOR PNP SI PD=300MW FT=150MHZ	28480	1853-0020
A1A2Q8	1855-0420	2	1	TRANSISTOR J FET 2N4391 N-CHAN D-MODE	01295	2N4391
A1A2Q9	1854-0404	3	1	TRANSISTOR NPN SI TO-18 PD=360MW	28480	1854-0404
A1A2Q10	1854-0071	7	1	TRANSISTOR NPN SI PD=360MW FT=200MHZ	28480	1854-0071
A1A2Q11	1853-0020	4		TRANSISTOR PNP SI PD=300MW FT=150MHZ	28480	1853-0020
A1A2Q12	1853-0020	4		TRANSISTOR PNP SI PD=300MW FT=150MHZ	28480	1853-0020
A1A2Q13	1853-0020	4		TRANSISTOR PNP SI PD=300MW FT=150MHZ	28480	1853-0020
A1A2Q14	1853-0020	4		TRANSISTOR PNP SI PD=300MW FT=150MHZ	28480	1853-0020
A1A2R1*	0757-0438	1	1	RESISTOR 1.62K 1% .125W F TC=0+-100	24546	C4 1/8 T0-1621 F
A1A2R2	0757-0279	0	2	RESISTOR 3.16K 1% .125W F TC=0+-100	24546	C4 1/8-T0-3161 F
A1A2R3	0757-0279	0		RESISTOR 3.16K 1% .125W F TC=0+-100	24546	C4 1/8-T0-3161 F
A1A2R4	0698-0084	9	5	RESISTOR 2.15K 1% .125W F TC=0+-100	24546	C4 1/8-T0-2151 F
A1A2R5	0698-0084	9		RESISTOR 2.15K 1% .125W F TC=0+-100	24546	C4 1/8-T0-2151 F
A1A2R6	0698-0084	9		RESISTOR 2.15K 1% .125W F TC=0+-100	24546	C4 1/8 T0 2151 F
A1A2R7	0698-0084	9		RESISTOR 2.15K 1% .125W F TC=0+-100	24546	C4 1/8-T0 2151 F
A1A2R8	0698-0084	9		RESISTOR 2.15K 1% .125W F TC=0+-100	24546	C4 1/8 T0 2151 F
A1A2R9	0757-0463	1	6	RESISTOR 61.9K 1% .125W F TC=0+-100	24546	C4 1/8-T0-6192 F
A1A2R10	0698-3447	4	7	RESISTOR 422 1% .125W F TC=0+-100	24546	C4 1/8 T0 4220 F
A1A2R11	0698-3447	4		RESISTOR 422 1% .125W F TC=0+-100	24546	C4 1/8 T0-4220 F
A1A2R12	0698-3447	4		RESISTOR 422 1% .125W F TC=0+-100	24546	C4 1/8 T0 4220 F
A1A2R13	0757-0416	7	2	RESISTOR 511 1% .125W F TC=0+-100	24546	C4 1/8-T0 5110 F
A1A2R14	0698-3447	4		RESISTOR 422 1% .125W F TC=0+-100	24546	C4 1/8-T0 4220 F
A1A2R15	0698-3447	4		RESISTOR 422 1% .125W F TC=0+-100	24546	C4 1/8-T0-4220 F

TABLE 81. DIGITAL PANEL METER ASSEMBLY A I, REPLACEABLE PARTS (2 OF 2)

Reference Designation	HP Part Number	C D	Qty	Description	Mfr Code	Mfr Part Number
A1A2R16	0698-3447	4		RESISTOR 422 1% .125W F TC=0+-100	24546	C4-1/8-T0-422R-F
A1A2R17	0698-3447	4		RESISTOR 422 1% .125W F TC=0+-100	24546	C4-1/8-T0-422R-F
A1A2R18	0757-0460	1		RESISTOR 61.9K 1% .125W F TC=0+-100	24546	C4-1/8-T0-6192-F
A1A2R19	0757-0460	1		RESISTOR 61.9K 1% .125W F TC=0+-100	24546	C4-1/8-T0-6192-F
A1A2R20	0757-0460	1		RESISTOR 61.9K 1% .125W F TC=0+-100	24546	C4-1/8-T0-6192-F
A1A2R21	0757-0460	1		RESISTOR 61.9K 1% .125W F TC=0+-100	24546	C4-1/8-T0-6192-F
A1A2R22	0757-0199	3	1	RESISTOR 21.5K 1% .125W F TC=0+-100	24546	C4-1/8-T0-2152-F
A1A2R23	0757-0442	9	2	RESISTOR 10K 1% .125W F TC=0+-100	24546	C4-1/8-T0-1002-F
A1A2R24	0811-0640	5	3	RESISTOR 100K .01% .125W PWW TC=0+-10	28480	0811-0640
A1A2R25	0811-0696	1	1	RESISTOR 91K 1% .125W PWW TC=0+-5	28480	0811-0696
A1A2R26	0757-0274	5	1	RESISTOR 1.21K 1% .125W F TC=0+-100	24546	C4-1/8-T0-1211-F
A1A2R27	0811-0640	5		RESISTOR 100K .01% .125W PWW TC=0+-10	28480	0811-0640
A1A2R28	2100-1738	9	1	RESISTOR-TRMR 10K 10% C TOP-ADJ 1-TRN	73138	82PR10K
A1A2R29	2100-2655	1	1	RESISTOR-TRMR 100K 10% C TOP-ADJ 1-TRN	73138	82PR100K
A1A2R30	0698-3155	1	1	RESISTOR 4.64K 1% .125W F TC=0+-100	24546	C4-1/8-T0-4641-F
A1A2R31	0757-0460	1		RESISTOR 61.9K 1% .125W F TC=0+-100	24546	C4-1/8-T0-6192-F
A1A2R32	0698-3162	0	1	RESISTOR 46.4K 1% .125W F TC=0+-100	24546	C4-1/8-T0-4642-F
A1A2R33	0811-0640	5		RESISTOR 100K .01% .125W PWW TC=0+-10	28480	0811-0640
A1A2R34	0757-0442	9		RESISTOR 10K 1% .125W F TC=0+-100	24546	C4-1/8-T0-1002-F
A1A2R35	0698-3442	9	1	RESISTOR 237 1% .125W F TC=0+-100	24546	C4-1/8-T0-2370-F
A1A2R36	0757-0416	7		RESISTOR 511 1% .125W F TC=0+-100	24546	C4-1/8-T0-511R-F
A1A2R37	0757-0438	3	1	RESISTOR 5.11K 1% .125W F TC=0+-100	24546	C4-1/8-T0-5111-F
A1A2R38	0811-1085	4	1	RESISTOR 33 5% 3W PW TC=0+-30	28480	0811-1085
A1A2R39	0698-3136	8	1	RESISTOR 17.8K 1% .125W F TC=0+-100	24546	C4-1/8-T0-1782-F
A1A2TP1	0360-1788	7	1	CONNECTOR SGL CONT PIN .045 IN BSC SZ SQ	28480	0360-1788
A1A2U1	1810-0398	9	1	NETWORK-RES 10-SIP22.0k OHM X 9	11236	750-101-R22K
A1A2U2	1826-0588	2	1	IC CONV 16 DIP-P PKG	17856	LD120CJ
A1A2U3	1826-0587	1	1	IC CONV 18-DIP-P PKG	17856	LD121CJ
A1A2U4	1820-2716	0	1	IC DRVR CMOS DSPL DRVR	04713	MC14513BCL
A1A2U5	1810-0347	8	2	NETWORK-RES 8-SIP2.2K OHM X 4	01121	208B222
A1A2U6	1810-0347	8		NETWORK-RES 8 SIP2.2K OHM X 4	01121	208B222
A1A2U7	1826-1050	3	1	IC OP AMP GP 8-TO-99 PKG	28480	1826-1050
A1A2U8	1826-0367	5	1	IC 7DM05C V RGLTR TO-39	04713	MC78M05CG
A1A2VR1	1902-3024	9	1	DIODE-ZNR 2.87V 5% DO-7 PD=.4W TC=-.07%	28480	1902-3024
A1A2VR2	1902-3149	9	1	DIODE-ZNR 9.39V 5% DO-35 PD=.4W	28480	1902-3149
A1A2VR3	1902-0625	0	1	DIODE-ZNR 1N829 6 2V 5% DO 7 PD= 25W	04713	1N829
A1A2VR4	1902-1286	1	1	DIODE ZNR 1N5342B 6 8V 52 PD=5W TC=+200%	04713	1N5342B
A1A2XA1	1251-3403	7	1	CONNECTOR PC EDGE 10-CONT/ROW 2 ROWS	28480	1251-3403
				A1 MISCELLANEOUS PARTS		
	0570-0130	6	1	SCREW-MACH 6 37 ,375 IN LC BDG HD-SLT	28480	0570-0130
	1205-0095	8	1	HEAT SINK	30161	3225B
	2420-0014	0	1	NUT-HEX-DBL-CHAM 6-37 THD .125 IN THK	28480	2420-0014
	08559-00042	6	1	INSULATOR	28480	08559-00042
	2360-0113	2	1	SCREW-MACH 6-32 .25-IN-LG PAN-HD-POZI	28480	2360-0113
	3050-0010	2	1	WASHER-FL MTLC NO. 6 .147-IN-ID	28480	3050-0010

A1A2
DPM DRIVER ASSEMBLY

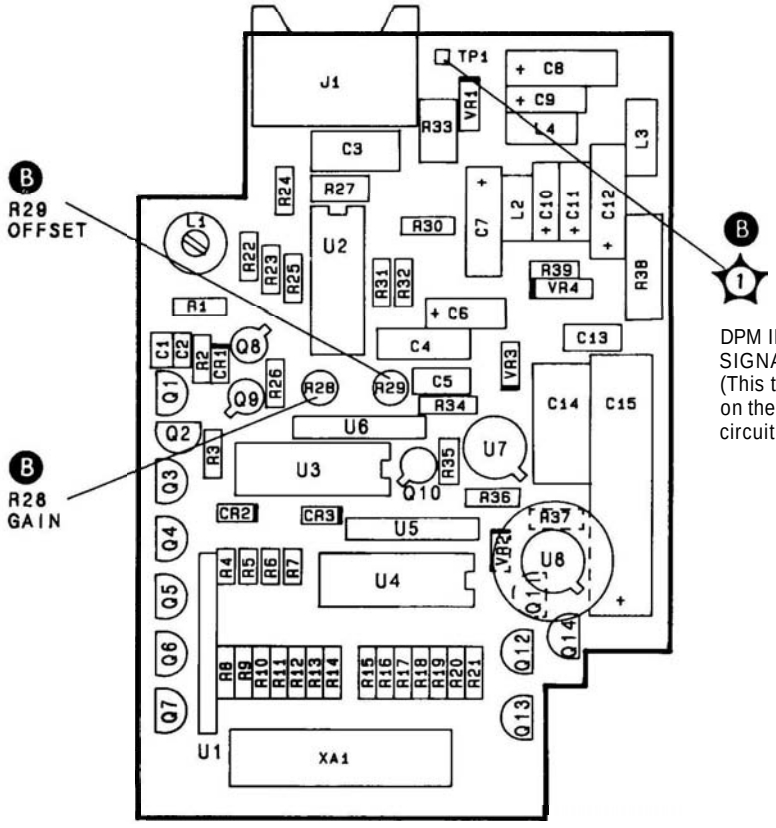

A1A1
DPM DISPLAY ASSEMBLY

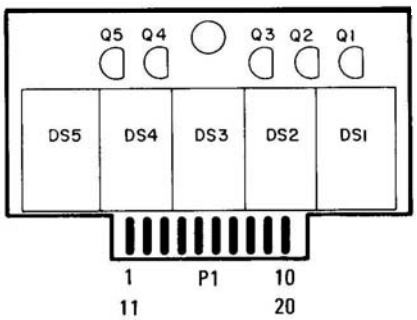

FIGURE 8-5. DIGITAL PANEL METER ASSEMBLY A1, COMPONENT LOCATIONS

A1A2 DPM DRIVER ASSEMBLY
08559-60078

A1A1 DPM DISPLAY ASSEMBLY
08559-60079

J1

PIN	SIGNAL	TO/FROM	FUNCTION BLOCK
1	NC		
2	DPMDG	A1A2J2	C
3	DPMSG	A8	B
4	NC		
5	-12.6V	REAR PANEL P1:28	C
6	DPMA	A8	B
7	+15V	REAR PANEL P1:29	C
8	DPMAG	A8	C
9	DPM1	A8	NC
10	DPM2	A8	NC

A REFERENCE

B ANALOG PROCESSOR

C CLOCK

C POWER SUPPLIES

D DIGITAL PROCESSOR

E DISPLAY INTERFACE

NOTES:

1. REFERENCE DESIGNATORS WITHIN THIS ASSEMBLY ARE ABBREVIATED. PREFIX ABBREVIATION WITH ASSEMBLY NUMBER FOR COMPLETE REFERENCE DESIGNATOR.
2. UNLESS OTHERWISE INDICATED: RESISTANCE IN OHMS (Ω) CAPACITANCE IN MICROFARADS (μF) INDUCTANCE IN MICROHENRIES (μH)
3. U6 PINS 1, 2, 3, AND 4 ARE NOT USED.
4. MNEMONIC TABLE:

MNEMONIC	DESCRIPTION
DPMA	DPM INPUT SIGNAL
DPMAG	DPM ANALOG GND
DPMDG	DPM DIGITAL GND
DPMSG	DPM SIGNAL GND

5. IC AND TRANSISTOR PIN CONFIGURATIONS (BOTTOM VIEW)

FRONT SWITCH ASSEMBLY A2, CIRCUIT DESCRIPTION

Functions of the switches and potentiometers on the Front Switch Assembly **A2** are covered in the circuit descriptions for the electronic assemblies they control.

FRONT SWITCH ASSEMBLY A2 DISASSEMBLY AND REPAIR

REMOVAL OF FRONT SWITCH ASSEMBLY FROM HP 8559A CHASSIS

1. Turn HP 8559A upside down on a flat work surface.

NOTE

Numbers in parentheses match the numerical callouts on Figure 8-10 Front Switch Assembly (exploded view). All illustrations referenced in these procedures follow the last procedural step.

2. Use a 9/16-inch nut driver (drilled out, if necessary, to fit over front panel BNC connectors, and covered with heatshrink tubing or tape to avoid scratching enameled front panel) to remove dress nut holding CAL OUTPUT connector to front panel.

3. Remove bottom guide rail. Use a 5/16-inch open-end wrench to carefully disconnect semi-rigid Cable W2 from Input Attenuator Assembly A3 to First Mixer Assembly A4.

4. Disconnect two 40-conductor Ribbon Cables, A2A1W1 (46) and A2A1W2 (47) from Motherboard Assembly A16.

5. Turn HP 8559A right-side up, with front panel facing you.

6. Remove screw holding cable clamp to Second Converter Filter Assembly A5A2. Remove screw located below cable clamp that was removed.

7. Remove the four screws attaching Front Switch Diecast (1) to left and right side gussets. Remove Front Switch Assembly A2, with Front Panel and RF Input Attenuator Assembly A3, from HP 8559A chassis and set chassis to one side.

DISASSEMBLY OF FRONT SWITCH ASSEMBLY

8. Remove the following front panel knobs: FINE TUNE, COARSE TUNE, RESOLUTION BW, FREQ SPAN/DIV, REF LEVEL FINE, and REFERENCE LEVEL (including Index Disc, Retaining Cup, Nylon Spacer Washer(s), Conical Spring, and Input Attenuator pointer).

9. Remove SWEEP TRIGGER, MANUAL SWEEP, and SWEEP TIME/DIV knobs using a no. 4 hex wrench.

10. Use a no. 4 hex wrench to loosen the two set screws in Lock Knob. Remove Lock Knob.

11. Remove VIDEO FILTER and BASELINE CLIPPER knobs using a no. 2 spline (Bristol) wrench.

12. Remove retaining ring on coarse tune shaft. Remove the three flat washers and two wavy washers. Remove front panel hex nut and lockwasher on Coarse Tune Bushing (36) using a 1/2-inch nut driver (covered with heatshrink tubing or tape to avoid scratching enameled front panel).

13. Loosen hex nut attaching RF Input Cable Assembly W1 to Front Switch Assembly A2 using a 5/8-inch open-end wrench. Carefully disconnect input cable assembly from RF Input Attenuator Assembly A3 using a 5/16-inch open-end wrench. Remove input cable assembly from Front Switch Assembly A2.

14. Disconnect 10-conductor ribbon cable connected to DPM Driver Assembly A1A2. Remove screw holding DPM Display Assembly A1A1 to diecast. DPM window will fall out.

15. Use a 5/16-inch nut driver to remove the two nuts attaching front panel to Front Switch Diecast (1). Remove front panel from Front Switch Diecast.

16. Place Front Switch Assembly A2 on flat working surface with remaining knobs face-down and lock mechanism facing you. Prop sides of switch assembly to allow knobs and shafts to clear working surface (be careful not to scratch front panel enamel).

17. Remove screw and washer attaching Attenuator Bracket (49) to Front Switch Diecast (1). Remove RF Input Attenuator Assembly A3 from Front Switch Assembly A2.

18. Disassembly of REFERENCE LEVEL Switch:

    a. Cut tiewrap holding REF LEVEL FINE wires to rear switch board.

    b. Remove the three screws (48) attaching Ref Level Fine Pot Plate (68) to Standoffs (62).

    c. Remove Index Disc Locator and Ref Level Fine assembly (30, 31, and 64 through 69) from Front Switch Assembly A2 (set to one side, without detaching wires).

    d. Remove three standoffs (62) used to support Ref Level Fine Pot Plate (68). Use a no. 6 hex wrench to loosen the two set screws on Miter Gear (51) attached to Attenuator Shaft Assembly (18); then remove Miter Gear from shaft.

    e. Use a no. 4 hex wrench to loosen Rotating Lockout (63) attached to Ref Level Shaft (6), and remove lockout from shaft. Remove Ref Level Detent (61) from Front Switch Assembly A2. Be careful to keep Ball Bearing (10) and Spring (11) with Ref Level Rotor (60).

    f. Remove the three Studs (53) used to support Ref Level Detent (61).

    g. Use a no. 4 hex wrench to loosen the two set screws on front Anticrush Drive Hub Assembly (7) (between Front Switch Board A2A1 and Front Switch Diecast (1) on Ref Level Shaft (6); accessible from side of Front Switch Assembly). Remove Ref Level Rotor (60) and Ref Level Shaft (6) with rear Anticrush Drive Hub Assembly (7) still attached.

NOTE

Rear Anticrush Drive Hub Assembly (7) on Ref Level Shaft (6) is preset at 9.525 mm (0.3 in.) from end of shaft (see Figure 8-7A). Do not remove drive hub unless necessary for repair.

19. Disassembly of RESOLUTION BW Switch.

    a. Remove Retaining Clip (21) from RESOLUTION BW Shaft (55).

    b. Use a 1/4-inch Nut Driver to remove two Hex Nuts (20) attaching Bandwith Switch Board (59) to Front Switch Assembly, and set board to one side (without detaching wires).

    c. Remove Bandwidth Rotor (56). Be careful to keep Ball Bearings (10) and Springs (23) with rotor.

    d. Remove Bandwidth Shaft (55), with rear Drive Hub (15) still attached, from Front Switch Assembly.

NOTE

Rear Drive Hub (15) on Bandwidth Shaft (55) is preset flush with collar on shaft (see Figure 8-7B). Do not remove drive hub unless necessary for repair.

e. Use a no. 4 hex wrench to loosen the two screws on Coupling Hub (54) attached to Frequency Span Shaft (9), and remove hub from shaft.

f. Remove the two Studs (53) used to support Bandwidth Switch Board (59). Remove Bandwidth Detent (52) from Front Switch Assembly.

20. Remove the remaining Screws (48) attaching Front Switch Board Assembly A2A1 to Front Switch Diecast (1).

21. Twist the left side of Front Switch Board Assembly A2A1 down approximately 1/8-inch to provide clearance from Front Switch Diecast support arm (upper left corner). Lift Front Switch Board Assembly A2A1 from Front Switch Diecast (1) and set aside.

22. Removal of Rotor Assemblies:

a. Remove Attenuator Drive Rotor (8), front Anticrush Drive Hub Assembly (7), and Attenuator Shaft Assembly (18) from Front Switch Diecast (1), and set these parts aside.

b. Remove Frequency Span Rotor (14) with associated parts (9 – 12, 15 – 17) from Front Switch Diecast (1), and set aside. Be careful to keep Ball Bearings (10) and Springs (11) with Frequency Span Rotor (14).

NOTE

Drive Hub (15) on Frequency Span Shaft (9) is preset at 12.954 mm (0.510 in.) from end of shaft (see Figure 8-7C). Do not remove drive hub from shaft unless necessary for repair.

c. Remove both remaining rotor assemblies from Front Switch Diecast (1), and set aside. Be careful to keep Ball Bearings (10) and Springs (11) with their respective rotors.

23. Disassembly of Lock:

a. Press Locking Link (5) into Front Switch Diecast (1) to release pressure on Dowel Pin (4). Remove Dowel Pin through cutout in Front Switch Diecast. (Individual parts are identified in Figure 8-9.)

b. Remove Locking Link (5), Locking Shaft (3), and Lock Spring (2) from Front Switch Diecast.

CLEANING AND INSPECTION OF FRONT SWITCH ASSEMBLY

1. All switch contacts must be totally clean and grease-free for proper operation. Use a 50-50 mixture of isopropyl alcohol and distilled water to thoroughly clean switch rotor contacts and Front Switch Board Assembly A2A1. Avoid touching contacts with fingers.

2. Inspect for bent or damaged shafts, worn or broken contacts, weak or broken springs, rough feeling potentiometers, cracked castings, and damaged PC boards. Check for signs of corrosion or rust. Replace any suspect parts.

3. A special Instrument Grease (HP Part Number 6040-0584) is recommended exclusively for use during switch reassembly. Lubrication is essential for proper operation of switches and lock. A small brush is recommended for applying the Instrument Grease.

CAUTION

Misapplied grease might cause intermittent switch connections. Utmost care must be taken during reassembly to avoid excessive application of grease and contamination of switch contacts. Avoid getting grease on fingers.

ASSEMBLY OF FRONT SWITCH ASSEMBLY

1. Assembly of Lock:

   a. Lightly grease Locking Shaft **(3)** and insert into Front Switch Diecast **(1).** Lightly grease bearing surfaces of Locking Link **(5).**

   b. Insert Lock Spring **(2)** into Front Switch Diecast **(1).** Press Locking Link (5) fully into Front Switch Diecast and insert Dowel Pin **(4)** through access cutout (left side of lock boss) to hold lock mechanism in place. Check for correct lock operation.

2. Installation of Rotor Assemblies:

   a. Lightly grease all switch rotor detent holes on back of Front Switch Diecast **(1).**

   b. Place Front Switch Assembly on flat working surface with front panel face-down and lock mechanism facing you. Prop sides of switch assembly to provide clearance for knobs and shafts during assembly (be careful not to scratch front panel enamel).

   c. Inspect SWEEP TRIGGER rotor assembly **(10 – 12, 24 – 27).** Stop Arm **(26)** and Horseshoe Spring **(27)** are held in position by Push-on Retainer **(25)** and should move smoothly without binding (see Figure 8-8A). Roll Pins **(12)** should be positioned in hole 7 and hole 18 on SWEEP TRIGGER Rotor **(24).** Check that Spring **(11)** and Ball Bearing **(10)** are in position.

   d. Lightly grease long side of SWEEP TRIGGER Shaft **(24)** and insert SWEEP TRIGGER rotor assembly into left-most bushing in Front Switch Diecast **(1).** Position rotor so that Ball Bearing **(10)** aligns with stop boss on left side of Front Switch Diecast.

   e. Inspect SWEEP TIME/DIV rotor assembly **(10,** 11, **21, 22, 24),** Figure 8-8B. MANUAL SWEEP Shaft **(22)** should be lightly greased and should turn freely inside SWEEP TIME/DIV Shaft **(24).** Check that Spring **(11)** and Ball Bearing **(10)** are in position. Note that there are no roll pins inserted in the SWEEP TIME/DIV Rotor **(24).**

   f. Lightly grease long side of SWEEP TIME/DIV Shaft **(24)** and insert SWEEP TIME/DIV rotor assembly into next bushing in Front Switch Diecast **(1).**

   g. Inspect FREQ SPAN/DIV rotor assembly **(9 – 12, 14 – 17).** If Drive Hub **(15)** has been loosened or removed from Frequency Span Shaft **(9),** refer to Figure 8-8C for correct dimensions for adjustment. Roll Pins **(12)** should be positioned in hole **15** and hole **17** on Frequency Span Rotor **(14),** as shown in Figure 8-8C. Slotted Bushing **(16),** Hairpin Spring **(17),** and Frequency Span Shaft must be lightly greased where they contact each other for proper operation of push-pull mechanism. Check that Springs **(11),** Ball Bearings **(10),** Slotted Bushing, and Hairpin Spring are in correct position.

   h. Lightly grease long side of Frequency Span Shaft **(9)** and insert FREQ SPAN/DIV rotor assembly **(9 – 12, 14 – 17)** into next bushing in Front Switch Diecast **(1).** Position FREQ SPAN/DIV rotor assembly so that stop boss on Front Switch Diecast does not fall within small span between Roll Pins **(12).**

i. Inspect Attenuator Drive Rotor (8). Roll Pins (12) should be positioned in hole 1 and hole 9, as shown in Figure 8-8D.

j. Inspect front Anticrush Drive Hub Assembly (7). Note that pin is offset to one side of drive hub; place drive hub over right-most bushing in Front Switch Diecast (1) with this side down (i.e., pin as close as possible to Front Switch Diecast) for proper switch operation.

NOTE

Correct side of front Anticrush Drive Hub (7) must be oriented towards Front Switch Diecast (1) for proper operation of Front Switch Assembly.

k. Set Attenuator Drive Rotor (8) over Anticrush Drive Hub (7) with Attenuator Drive Rotor gear facing up. Long pin on Attenuator Drive Rotor should protrude through curved slot in diecast.

l. Lightly grease gear end of Attenuator Shaft Assembly (18) and insert into Front Switch Diecast (1). Place metal Washer (19) on shaft.

m. Clean contact fingers on all rotors using lint-free cloth and isopropyl alcohol/distilled water mixture. All rotors should be in proper position.

3. Installation of Front Switch Board Assembly A2A1:

a. Inspect Front Switch Board Assembly. Check switch traces for dirt, grease, or wear. Check interconnect wires, solder joints, pushbutton switches, and ribbon cables (46, 47).

b. Clean switch traces using lint-free cloth and isopropyl alcohol/distilled water mixture. No residue should be visible on traces.

c. Use a 3/8-inch open-end wrench to tighten Hex Nut (31) and Lockwasher (30) attaching VIDEO FILTER Potentiometer (33) and metal Washer (32) to Front Switch Board Assembly.

d. Use a 1/2-inch open-end wrench to tighten inner Hex Nut (28) and Washer (29) attaching Dual Tune Pot assembly (21, 28, 29, 34 – 42, 44) to Front Switch Board Assembly. Note that Roll Pin (12) aligns with hole in switch board to locate Dual Pot Bracket (39); Washer (29) between bracket and switch board is critical to proper switch operation.

e. Check Dual Tune Pot assembly for smooth operation and proper gear meshing; disassemble and lightly grease shafts if necessary. Install second Hex Nut (28) mid-way onto Coarse Tune Shaft Bushing (36).

f. Set Front Switch Board Assembly into place on partially-assembled Front Switch Assembly and use a Stud (53) on right-most side of switch assembly to loosely fasten switch board to Front Switch Diecast (1).

g. With one Stud (53) in place but not tight, twist left side of Front Switch Board Assembly up approximately 1/8-inch to fasten switch board under Front Switch Diecast support arm (upper left corner) and align switch shafts.

h. Loosely install the remaining Screws (48) used to fasten Front Switch Board Assembly to Front Switch Diecast (1).

CAUTION

Do not overtighten screws and studs into Front Switch Diecast (1).

i. Use a no. 4 hex wrench to temporarily install SWEEP TRIGGER, SWEEP TIME/DIV, MANUAL SWEEP, and FREQ SPAN/DIV knobs.

j. Tighten Stud (53) and left-most Screw (48) attaching Front Switch Board Assembly to Front Switch Diecast (1). Check all switch rotors for smooth, free switch action. Readjust position of Front Switch Board Assembly as necessary for proper switch action.

k. Tighten the two remaining Screws (48) attaching Front Switch Board Assembly to Front Switch Diecast (1).

l. Recheck all switch rotors for smooth, free switch action and readjust Front Switch Assembly as necessary.

4. Assembly of RESOLUTION BW switch:

a. Place Coupler Hub (54) on Frequency Span Shaft (9) with pin facing up (away from Front Switch Assembly). Do not tighten Coupler Hub at this time.

b. Center Bandwidth Detent (52) over Coupler Hub (54) with stop tab towards top of Front Switch Assembly, and fasten to Front Switch Assembly using two Studs (53).

c. If Drive Hub (15) has been removed or loosened from Bandwidth Shaft (55), refer to Figure 8-7B for proper adjustment. Lightly grease narrow end of Bandwidth Shaft (55) and detent holes on Bandwidth Detent (52). Insert Bandwidth Shaft (55) through Frequency Span Shaft (9).

d. Inspect RESOLUTION BW Rotor (56). Roll Pins (12) should be positioned in hole 16 and hole 17 as shown in Figure 8-8E. Check that Springs (23) and Ball Bearings (10) are in position.

e. Place RESOLUTION BW Rotor (56) onto Bandwidth Shaft (55). Position RESOLUTION BW Rotor assembly so that stop tab does not fall within small span between Roll Pins (12).

f. Clean contact fingers on RESOLUTION BW Rotor and switch traces on Bandwidth Switch Board (59) using lint-free cloth and isopropyl alcohol/distilled water mixture.

g. Use a 1/4-inch nut driver to fasten Bandwidth Switch Board (59) to Front Switch Assembly with two Hex Nuts (20). End of Bandwidth Shaft (55) must not bind against hole in board. Align MANUAL SWEEP Shaft (22) with MANUAL SWEEP Potentiometer (58) by turning MANUAL SWEEP knob clockwise until shaft engages with MANUAL SWEEP Potentiometer.

NOTE

Depth of MANUAL SWEEP Shaft (22) can be adjusted if necessary by carefully tapping SWEEP TIME/DIV Shaft (24) farther into the white plastic rotor.

h. Turn Front Switch Assembly over and remove FREQ SPAN/DIV knob using a no. 4 hex wrench.

i. Install Retainer Clip (21) on Bandwidth Shaft (55).

j. Use a no. 6 hex wrench and a no.4 hex wrench to temporarily install FREQ SPAN/DIV and RESOLUTION BW knobs.

k. Pull and turn FREQ SPAN/DIV Knob until a set screw is visible on Coupling Hub (54). Push FREQ SPAN/DIV knob in and out to align pin on Coupling Hub with slots in Bandwidth Rotor (56). With FREQ SPAN/DIV knob pushed in and Coupling Hub flush again Bandwidth Rotor (pin aligned), tighten set screw using a no. 4 hex wrench. Turn FREQ SPAN/DIV knob until second set screw is visible, and tighten second set screw.

l. Push FREQ SPAN/DIV knob in and out while observing Bandwidth Rotor (56). Bandwidth Rotor will not move if Coupling Hub (54) is properly aligned. Readjust Coupling Hub as necessary for proper operation.

5. Assembly of REFERENCE LEVEL Switch:

a. Install remaining two Studs (53) on Front Switch Assembly. Check that all screws and studs have been tightened.

b. If rear Anticrush Drive Hub Assembly (7) has been loosened or removed from Ref Level Shaft (6), refer to Figure 8-7A for correct dimensions for adjustment.

c. Inspect Ref Level Rotor (60). Roll Pins (12) should be positioned in hole 1 and hole 9, as shown in Figure 8-8F. Check that Spring (11) and Ball Bearing (10) are in position. Insert Ref Level Shaft (6) through Ref Level Rotor so that rear Anticrush Drive Hub (7) seats properly into rotor.

d. Lightly grease long end of Ref Level Shaft (6) and insert through Front Switch Board Assembly A2A1, Attenuator Drive Rotor (8), front Anticrush Drive Hub (7), and bushing in Front Switch Diecast (1).

e. Lightly grease detent holes on flat side of Ref Level Detent (61). Mount detent on three Studs (53) and fasten tightly with three Standoffs (62).

CAUTION

Hollow Ref Level Shaft (6) might be damaged if set screws in Rotating Lockout (63) are tightened excessively.

f. Place Rotating Lockout (63) on Ref Level Shaft (6) with teeth flat against Ref Level Detent (61). Lockout teeth should be aligned to miss pin on Ref Level Detent when Ref Level Shaft is pushed in (switch in any detent position). With Ref Level Shaft fully extended from front panel, use a no. 4 hex wrench to tighten Rotating Lockout.

g. Push Ref Level Shaft (6) in and out and check for smooth mechanical feel and proper Rotating Lockout (63) alignment. Rotating Lockout should not bind against Ref Level Detent (61) and should allow Ref Level Shaft to turn smoothly between detent positions. Adjust Rotating Lockout as necessary for proper operation.

h. Use a no. 4 hex wrench to lightly tighten one set screw in front Anticrush Drive Hub (7) visible between Attenuator Drive Rotor (8) and Front Switch Diecast (1).

i. Turn Attenuator Drive Rotor (8) so that long pin (for input Attenuator pointer) is at bottom of Front Switch Diecast (1). Hold Attenuator Drive Rotor in position and push in on Ref Level Shaft (6) to align front Anticrush Drive Hub (7).

j. Push Ref Level Shaft (6) in and out while observing Ref Level Rotor (60) and Attenuator Drive Rotor (8). Rotors will not move when front Anticrush Drive Hub (7) is properly adjusted.

k. Use a no. 4 hex wrench to firmly tighten both set screws in front Anticrush Drive Hub (7). Recheck Ref Level Shaft (6) as in step j, and readjust front Anticrush Drive Hub as necessary.

l. Slip Miter Gear (51) over Attenuator Shaft Assembly (18). Do not tighten at this time.

m. Inspect Ref Level Fine Assembly (30, 31, 65 – 69). Ref Level Fine Shaft (65) should turn smoothly. Check Ref Level Fine Potentiometer (69) and connecting wires for good electrical connections. Lightly grease Ref Level Fine Shaft and hollow Index Disc Locator (64) shaft.

n. Install Index Disc Locator (64) on Front Switch Assembly. Hole in locator bar rides over left-most Standoff (62) used to support Ref Level Fine Pot Plate (68). Install Ref Level Fine Assembly (30, 31, 65 – 69) on Front Switch Assembly with three Screws (48). Connecting wires should be routed. Ref Level Fine Shaft (65) should turn smoothly without binding over its full rotation. Adjust position of Ref Level Fine Pot Plate as necessary.

o. Use a new tiewrap to attach Ref Level Fine connecting wires to Standoff (62).

6. Installation of RF Input Attenuator A3:

a. Mount RF Input Attenuator to Attenuator Bracket (49) using two Screws (48). Check all eight attenuator positions by hand for proper detent action and smooth operation. Leave attenuator in full counter-clockwise position.

b. Slide Miter Gear (51) to end of Attenuator Shaft Assembly (18) against Ref Level Fine Pot Plate (68). Set Attenuator Assembly in place on Front Switch Assembly, with notch in Attenuator Bracket (49) lightly greased and aligned with Attenuator Shaft Assembly. Use Washer (50) and Screw (45) to fasten Attenuator Bracket to lower left corner of Front Switch Diecast (1). (Do not tighten Miter Gear at this time.)

7. Installation of Front Panel:

a. Remove the front panel knobs.

b. Use a 5/16-inch nut driver and two hex nuts to carefully install front panel (with pushbutton bezels and DPM window installed) on Front Switch Diecast (1).

c. Insert RF Input Cable Assembly W1 through front panel and loosely attach with hex nut. Carefully connect cable assembly to RF Input Attenuator using a 5/16-inch open-end wrench. Tighten cable assembly to front panel using a 5/8-inch open-end wrench.

d. Use a no. 4 hex (Allen) wrench to install lock Knob on Locking Shaft (3). Base of Lock Knob should clear front panel when Locking Shaft is pushed in.

e. Install front panel nut and washer on Coarse Tune Bushing and tighten with special 1/2-inch nut driver.

NOTE

Front-panel control knobs and their attaching parts are identified in Figure 6-1. Numbers in parentheses match numerical callouts on Figure 8-10.

8. Installation of Knobs:

a. Turn SWEEP TRIGGER Shaft (24) fully clockwise (as seen from front of Front Switch Assembly) to spring-loaded SINGLE position and release. Use a no. 4 hex wrench to install SWEEP TRIGGER knob with SINGLE line aligned with painted arrow on front panel. Check for proper switch operation and alignment.

b. Turn SWEEP TIME/DIV Shaft (24) to align Ball Bearing (10) on SWEEP TIME/DIV Rotor with left-most edge of stop boss on Front Switch Diecast (1). This positions SWEEP TIME/DIV Rotor with Ball Bearing slightly right of 12 o'clock position (as seen from front of Front Panel Assembly). Use a no. 4 hex wrench to lightly tighten SWEEP TIME/DIV knob onto SWEEP TIME/DIV Shaft with approximately center of green AUTO position aligned with painted arrow on front panel. Turn SWEEP TIME/DIV knob to any calibrated sweep time position and align knob markings exactly with painted arrow on front panel. Tighten SWEEP TIME/DIV knob and check for proper switch operation and alignment.

c. Uncouple RESOLUTION BW Shaft (55) from FREQ SPAN/DIV Shaft (9) by pulling both shafts out. Turn each shaft fully clockwise. Use a no. 6 hex wrench to install FREQ SPAN/DIV knob with 100 MHz indicated, checking that the plastic indicator guide on back of knob does not completely bottom into hole in Front Switch Diecast (1). Use a no. 4 hex wrench to install RESOLUTION BW Knob with 3 MHz indicated. Check for proper operation and alignment of both switches. Push-pull action should be smooth and positive.

d. Set nylon shim washer(s) and Index Disc (see Figure 6-1) in place on REFERENCE LEVEL knob to check for proper shim width. Nylon washers should shim Index Disc slightly away from labelled ring on REFERENCE LEVEL knob to prevent rubbing against painted numbers. Add or remove shim washers as necessary to provide slight clearance.

e. Turn Attenuator Drive Rotor (8) fully counter-clockwise so that Input Attenuator Pointer guide pin (P/O 8) is at bottom of front panel. Turn Ref Level Shaft *(6)* fully clockwise. Place plastic Input Attenuator Pointer over guide pin (pointer should indicate 70 dB). Place large end of conical spring against Input Attenuator Pointer and slide REFERENCE LEVEL knob, nylon washer(s), and Index Disc (from step d) onto Ref Level Shaft, securing with retainer clip.

f. Use a no. 6 hex wrench to adjust Miter Gears (51) for alignment of Input Attenuator Pointer with 70 dB front panel label and proper gear mesh (Input Attenuator A3 still in full counter-clockwise position).

g. Turn REFERENCE LEVEL knob to indicate level of −30 dBm signal and tighten knob securely with a no. 6 hex wrench. Check for proper operation and alignment of REFERENCE LEVEL and INPUT ATTEN controls, and readjust knob, gears, and Rotating Lockout (70) as necessary. Reference Level should range from −10 dBm to −100 dBm with 0 dB INPUT ATTEN selected.

h. Turn REF LEVEL FINE Shaft (65) fully counter-clockwise and use a no. 4 hex wrench to install REF LEVEL FINE knob with 0 dB indicated. Check for proper operation and alignment and readjust knob as necessary.

i. Turn BASELINE CLIPPER Shaft and VIDEO FILTER Shaft (33) fully counter-clockwise and use a no. 2 spline wrench to install BASELINE CLIPPER and VIDEO FILTER knobs in OFF position. Check for proper operation and alignment and readjust as necessary.

j. Install flat and wavy washers on coarse tune shaft as indicated in Figure 6-1. Compress these washers with retaining ring. A torque of about 1 in-oz should be required to turn coarse tune shaft.

k. Use a no. 4 hex wrench to install COARSE TUNE and FINE TUNE knobs. Base of COARSE TUNE knob should clear front panel. Check for proper operation of TUNING control.

INSTALLATION OF FRONT SWITCH ASSEMBLY INTO HP 8559A CHASSIS

9. Set Front Switch Assembly into place in chassis, being careful not to bend semi-rigid cables or pinch wires or ribbon cables. Attach Front Switch Diecast (1) to left and right side gussets with four screws.

10. Connect four wires (0,916,918,923) to correspondingly-labelled pins in Front Switch Board A2A1.

11. Attach DPM Driver Assembly A1A2 to diecast with one Screw.

12. Connect 10-conductor Ribbon Cable (46) to DPM Driver Assembly A1A2.

13. Connect the two 40-conductor Ribbon Cables A2A1W1 (46) and A2A1W2 (47) to Motherboard Assembly A16.

14. Use a 5/16-inch open-end wrench to carefully connect Semi-rigid Cable W2 from the Input Attenuator to the First Mixer.

15. Use special 9/16-inch nut driver to install CAL OUTPUT connector to front panel with one dress nut.

16. Slide HP 8559A into display mainframe, turn instrument ON, and verify proper operation of all controls.

FACTORY PRESET SHAFT ASSEMBLIES

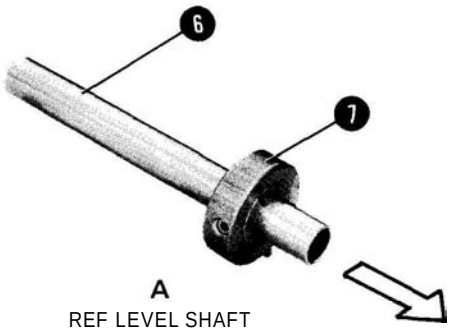

A
REF LEVEL SHAFT

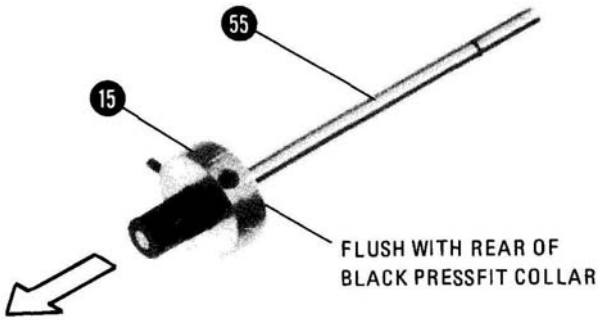

B
BANDWIDTH SHAFT

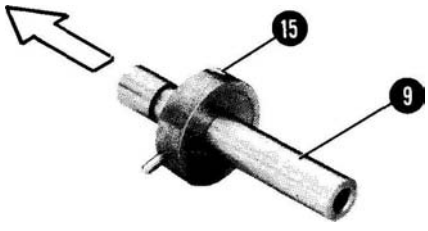

C
FREQUENCY SPAN SHAFT

NOTE

Arrows point toward
rear of HP 8559A

FIGURE 8-7. SHAFT ASSEMBLIES

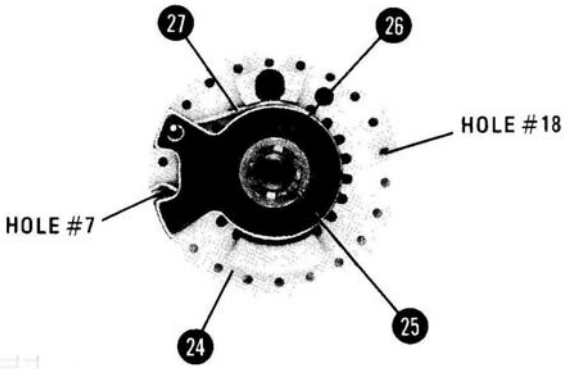

A
SWEEP TRIGGER ROTOR

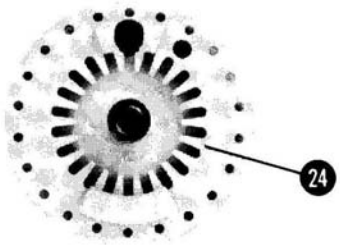

B
SWEEP TIME/DIV ROTOR

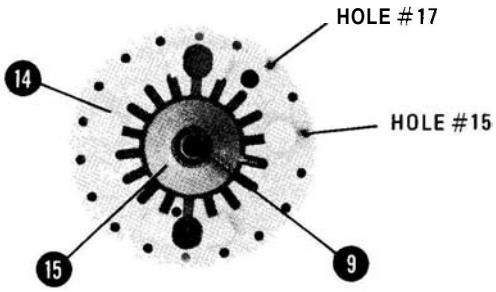

C
FREQ SPAN/DIV ROTOR

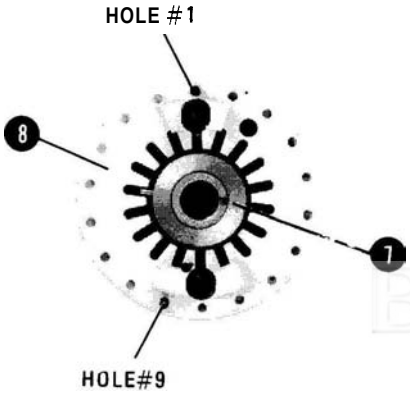

D
ATTENUATOR DRIVE ROTOR

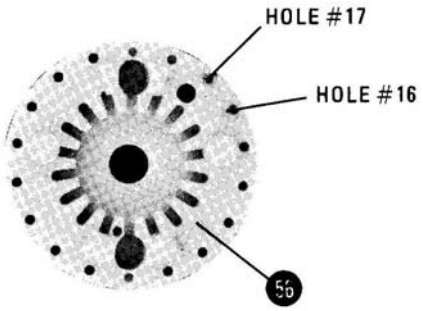

E
RESOLUTION BW ROTOR

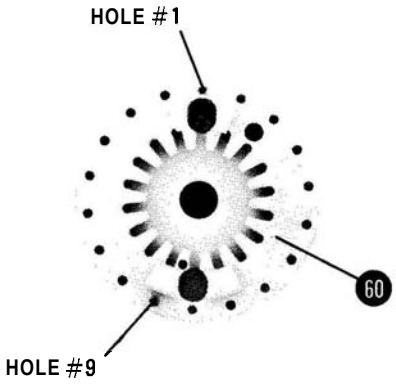

F
REF LEVEL ROTOR

FIGURE 8-8. ROTOR ASSEMBLIES

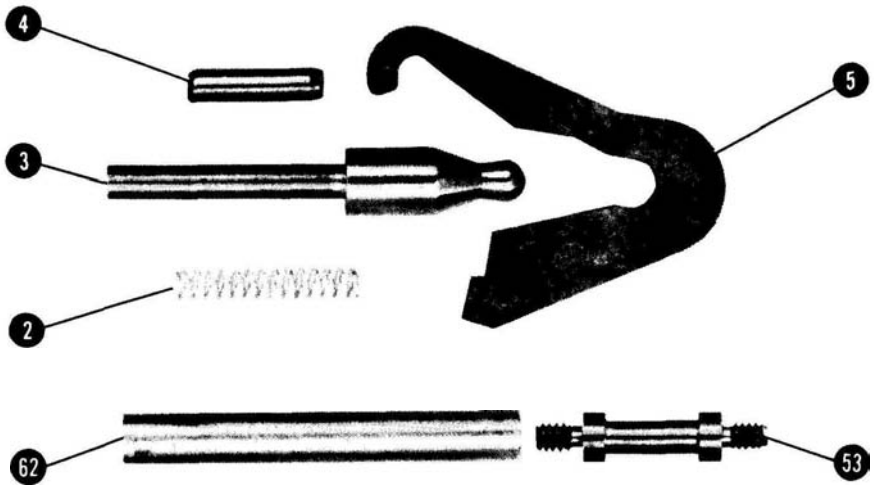

FIGURE 8-9. MACHINED PARTS

TABLE 8-2. FRONT SWITCHBOARD ASSEMBLY A2A1, REPLACEABLE PARTS

Reference Designation	HP Part Number	C D	Qty	Description	Mfr Code	Mfr Part Number
A2A1	08559-60069	3	1	FRONT SWITCH BOARD ASSEMBLY	28480	08559-60069
A2A1CR1	1901-0033	2	1	DIODE-GEN PRP 100V 200MA DO-7	28480	1901-0033
A2A1CR2	1901-0050	3	4	DIODE-SWITCHING 80V 200MA 2NS DO-35	28480	1901-0050
A2A1CR3	1901-0050	3		DIODE-SWITCHING 80V 200MA 2NS DO-35	28480	1901-0050
A2A1CR4	1901-0050	3		DIODE-SWITCHING 80V 200MA 2NS DO-35	28480	1901-0050
A2A1CR5	1901-0050	3		DIODE-SWITCHING 80V 200MA 2NS DO-35	28480	1901-0050
A2A1DS1	1990-0485	5	1	LED-LAMP LUM-INT=800UCD IF=30MA-MAX	28480	5082-4984
A2A1DS2	1990-0487	7	1	LED-LAMP LUM-INT=1MCD IF=20MA-MAX BVR=5V	28480	5082-4584
A2A1R1	0757-0447	4	1	RESISTOR 16.2K 1% .125W F TC=0+-100	24546	C4-1/8 T0-1622 F
A2A1R2	2100-3633	7	1	RESISTOR-VAR CONTROL CP 1K 10% LIN	28480	2100 3633
A2A1R3	2100-3744	1	2	RESISTOR-VAR CONTROL CCP 10K 10% LIN	01121	WP4G024S103UZ
A2A1R4	2100-3332	3	1	RESISTOR-TRMR 10K 20% CC TOP-ADJ 1-TRN	28480	2100 3332
A2A1R5	0757-0444	1	1	RESISTOR 12.1K 1% .125W F TC=0+-100	24546	C4 1/8 TO-1212 F
A2A1R6	2100-3785	0	1	RESISTOR-VAR CONTROL CCP 500 10% LIN	01121	WP4G024S501UZ
A2A1R7	2100-3786	1	1	RESISTOR-VAR CONTROL CCP 10K 20% 10CW	01121	WP4G024S103RZ
A2A1R8	0757-0280	3	1	RESISTOR 1K 1% .125W F TC=0+-100	24546	C4-1/8-T0-1001-F
A2A1R10	0757-0317	7	1	RESISTOR 1.33K 1% .125W F TC=0+-100	24546	C4-1/8-T0-1331-F
A2A1R11	2100-3744	1		RESISTOR-VAR CONTROL CCP 10K 10% LIN	01121	WP4G024S103UZ
A2A1S2	3101-2213	9	1	SWITCH-PB 3 STATION 15MM C-C SPACING	28480	3101-2213
A2A1S7	3101-2376	6	1	SWITCH-PB 6-STATION 10MM C-C SPACING	28480	3101-2376
A2A1S8	3101-2124	2	2	SWITCH-PB DPDT ALTNG .25A 115VAC	28480	3101-2124
A2A1S9	3101-2124	2		SWITCH-PB DPDT ALTNG .25A 115VAC	28480	3101-2124
A2A1VR1	1902-3172	8	1	DIODE-ZNR 11V 2% DO-35 PD=.4W TC=+.062%	28480	1902-3172
A2A1W1	08559-60004	6	1	RIBBON CABLE, DPM/REAR SWITCH	28480	08559-60004
A2A1W2	08559-60003	5	1	RIBBON CABLE, FRONT SWITCH	28480	08559-60003
A2A1XDS1	1200-0010	9	2	SOCKET-TUBE 2-CONT	28480	1200-0010
A2A1XDS2	1200-0010	9		SOCKET-TUBE 2-CONT	28480	1200-0010

Reference Designator	HP Part Number	C D	Qty	Description	Mfr. Code	Mfr. Part Number
A2	08559-60065	9	1	FRONT SWITCH ASSEMBLY	28480	08559-60065
1	5021-3213	4	1	DIECAST, FRONT SWITCH	28480	5021-3213
2	1460-0012	1	1	SPRING, CPRSN .135-IN-OD .688-IN-OA-LG	28480	1460-0012
3	5021-3227	0	1	SHAFT, LOCKING	28480	5021-3227
4	1480-0017	8	1	PIN, DOWEL .125 OD	28480	1480-0017
5	5001-5818	7	1	LINK, LOCKING	28480	5001-5818
6	5021-3218	9	1	SHAFT, REF LEVEL	28480	5021-3218
7	08559-20060	0	2	HUB ASSEMBLY, DRIVE, ANTICRUSH	28480	08559-20060
8	08559-20043	9	1	ROTOR, ATTENUATOR DRIVE	28480	08559-20043
9	5021-3224	7	1	SHAFT, FREQUENCY SPAN	28480	5021-3224
10	1410-0006	8	8	BALL, BRG TYPE .1875 DIA GRADE 50SST	78707	GRADE 50
11	1460-0623	0	6	SPRING, COMPRESSION .18-IN-OD .312-IN-OA-LG	28480	1460-0623
12	1480-0059	8	11	PIN, ROLL	28480	1480-0059
13	1480-0072	5	1	PIN, ROLL .0625 IN DIA	28480	1480-0072
14	08558-20066	5	1	ROTOR, FREQUENCY SPAN	28480	08558-20066
15	08558-20059	6	2	HUB, DRIVE	28480	08558-20059
16	08558-20089	2	1	BUSHING, SLOTTED	28480	08558-20089
17	1460-1376	2	1	SPRING, HAIRPIN	28480	1460-1376
18	5021-3223	6	1	SHAFT ASSEMBLY, ATTENUATOR	28480	5021-3223
19	3050-0032	8	1	WASHER, FL MTLC NO.8 .189-IN-ID	28480	3050-0032
20	2260-0009	3	3	NUT, HEX 4-40 THD .094 IN THK	28480	2260-0009
21	0510-0015	0	5	RETAINER, RING E R EXT .125IN DIA STL	28480	0510-0015
22	5021-3226	9	1	SHAFT, MANUAL SWEEP	28480	5021-3226
23	1460-1860	9	2	SPRING, COMPRESSION	92830	CO180-014-0310-S
24	08565-20108	5	2	ROTOR/SHAFT ASSEMBLY, DOUBLE CONTACT	28480	08565-20108
25	0510-0027	4	1	RETAINER, PUSH ON	28480	0510-0027
26	08558-00053	8	1	STOP ARM	28480	08558-00053
27	1460-0537	5	1	SPRING, HORSESHOE	28480	1460-0537
28	2950-0001	8	4	NUT, HEX DBL CHAM 3/8 32 THD .094 IN THK	28480	2950-0001
29	2190-0016	3	4	WASHER, LK INTL T 3/8 IN .377 IN ID	28480	2190-0016
30	2190-0067	4	2	WASHER, LK INTL T 1/4 IN .256 IN ID	28480	2190-0067
31	2950-0006	3	2	NUT, HEX DBL CHAM 1/4 32 THD .094 IN THK	28480	2950-0006
32	3050-0028	2	1	WASHER FL MTCL NO. 12 .25 IN ID	28480	3050-0028
33 (A2R4/R5/S1)	2100-3973	8	1	RESISTOR, VAR 50K 20% 5W (VIDEO FILTER)	28480	2100-3973
34	08558-20114	4	1	SHAFT, FINE TUNE	28480	08558-20114
35	08558-20113	3	1	SHAFT, COARSE TUNE	28480	08558-20113
36	08558-20111	1	1	BUSHING, COARSE TUNE SHAFT	28480	08558-20111
37	1430-0568	9	1	GEAR, SPUR 40T	28480	1430-0568
38	1460-1542	4	1	SPRING, UNIVERSAL COUPLER	28480	1460-1542
39	5001-5825	6	1	BRACKET, DUAL POT	28480	5001-5825
40 (A2R2)	2100-3452	8	1	RESISTOR, VAR PREC W/CP 10 TRN 10K 10% (FINE TUNE)	28480	2100-3452
41 (A2R1)	2100-3593	8	1	RESISTOR, VAR PREC W/CP 10 TRN 5K 10% (COARSE TUNE)	28480	2100-3593
42	1430-0567	8	1	GEAR, SPUR 60T	28480	1430-0567
43	5021-3252	1	1	STUD, .500 IN LG 4-40 THD	28480	5021-3252
44	3050-0086	2	1	WASHER, FL MTLC 3/8 IN .406 IN ID	28480	3050-0086
45	2200-0105	4	1	SCREW, MACH 4-40 .312 IN LG PAN POZI	28480	2200-0105
46	08559-60004	6	1	CABLE ASSY, DPM RIBBON (A2A1W1-P/O A2A1)	28480	08559-60004
47	08559-60003	5	1	CABLE ASSY, INT RIBBON (A2A1W2-P/O A2A1)	28480	08559-60003
48	2200-0103	2	8	SCREW, MACH440 .25 IN LG PAN HD POZI	28480	2200-0103
49	5001-5817	6	1	BRACKET, ATTENUATOR	28480	5001-5817
50	3050-0105	6	3	WASHER, FL MTLC NO.4 .125 IN ID	28480	3050-0105
51	1430-0036	6	2	GEAR, MIT 16T 32PP 20 DG PA BRS	28480	1430-0036
52	5001-5816	5	1	DETENT, BANDWIDTH	28480	5001-5816
53	5021-3220	3	5	STUD, .500 IN LG 4-40 THD	28480	5021-3220
54	08558-20058	5	1	HUB, COUPLING	28480	08558-20058
55	5021-3225	8	1	SHAFT, BANDWIDTH	28480	5021-3225
56	08558-40004	3	1	ROTOR, SINGLE CONTACT	28480	08558-40004
57				NOT ASSIGNED		
58 (A2A1R4)	2100-3332	3	1	RESISTOR, TRMR 10K 20% CC 1-TRN (MAN SWEEP)	28480	2100-3332
59	08559-20019	9	1	BOARD, BANDWIDTH SWITCH (P/O A2A1)	28480	08559-20019
60	08559-40005	4	1	ROTOR, DOUBLE CONTACT	28480	08559-40005
61	5001-5815	4	1	DETENT, REF LEVEL	28480	5001-5815
62	5021-3221	4	3	STANDOFF, 1.438 IN LG 4-40 THD	28480	5021-3221
63	08558-20061	0	1	LOCKOUT, ROTATING	28480	08558-20061
64	5061-5422	5	1	LOCATOR, INDEX DISC	28480	5061-5422
65	5021-3217	8	1	SHAFT, REF LEVEL (FINE)	28480	5021-3217
66	1490-0841	7	1	COUPLING, RGD .375 LG BRS	28480	1490-0841
67	3050-0080	6	1	WASHER, FL NM NO.5 .13 IN ID .25 IN OD	28480	3050-0080
68	08558-00021	0	1	PLATE, REF LEVEL FINE POT	28480	08558-00021
69 (A2R3)	2100-0542	1	1	RESISTOR, VAR CONTROL WW 10K 5% LIN (REF LEVEL FINE)	28480	2100-0542
70	08559-00022	2	1	MYLAR, INSULATOR	28480	08559-00022

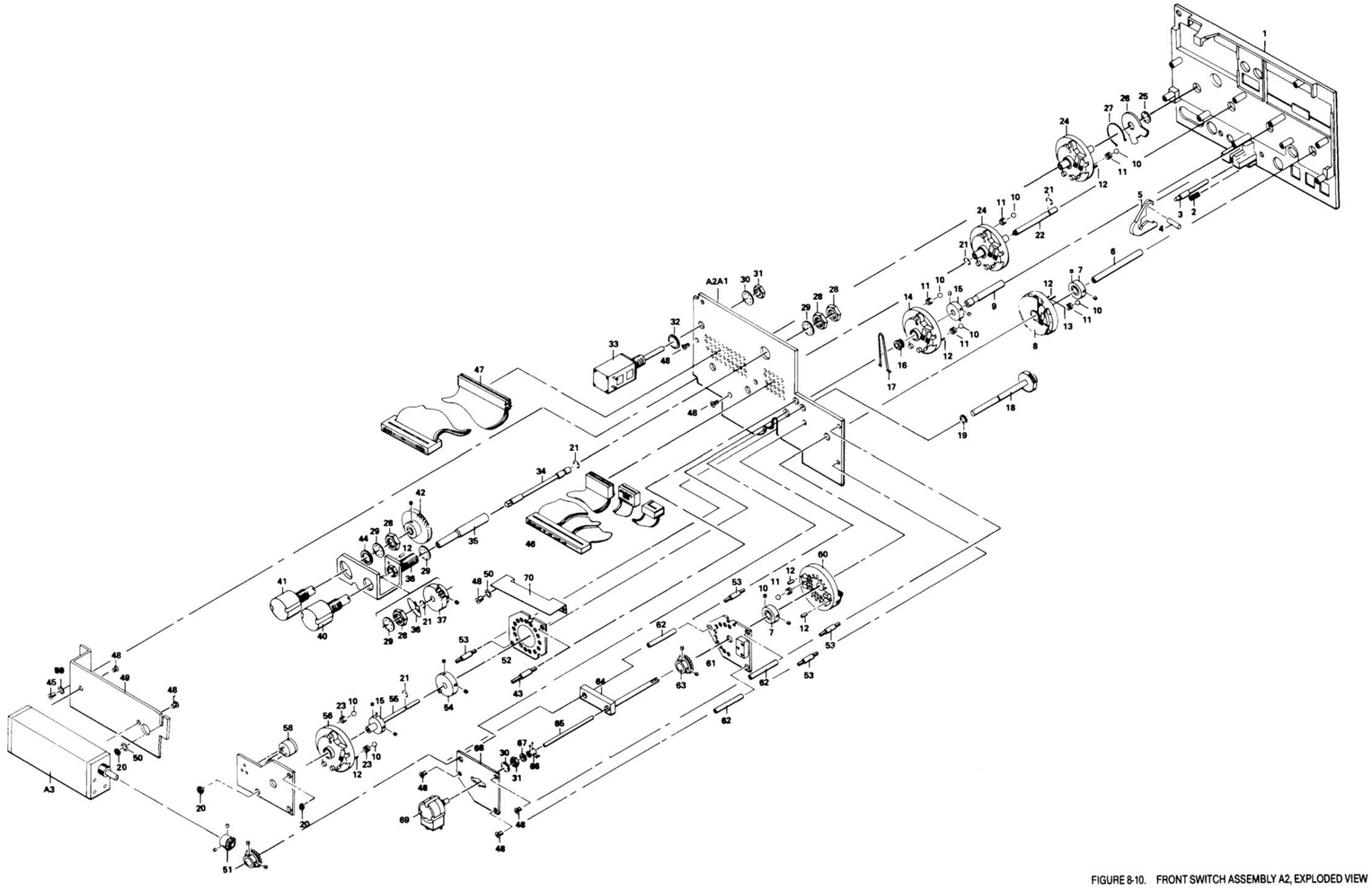

FIGURE 8-10. FRONT SWITCH ASSEMBLY A2, EXPLODED VIEW

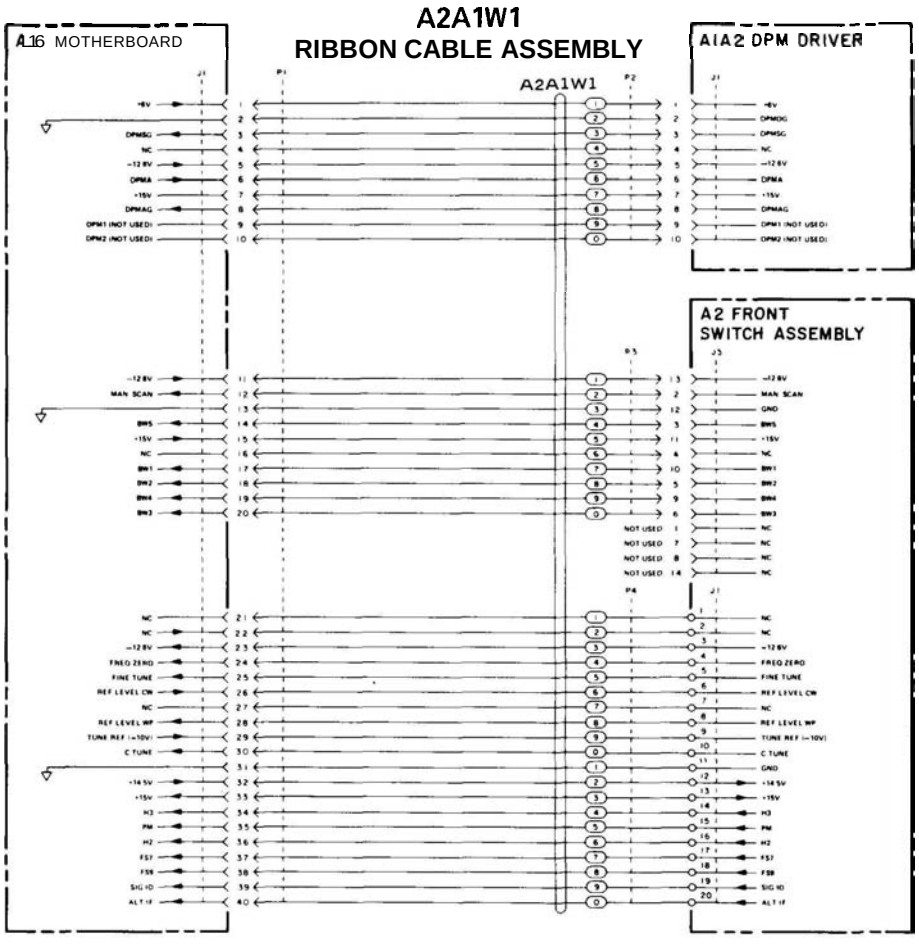

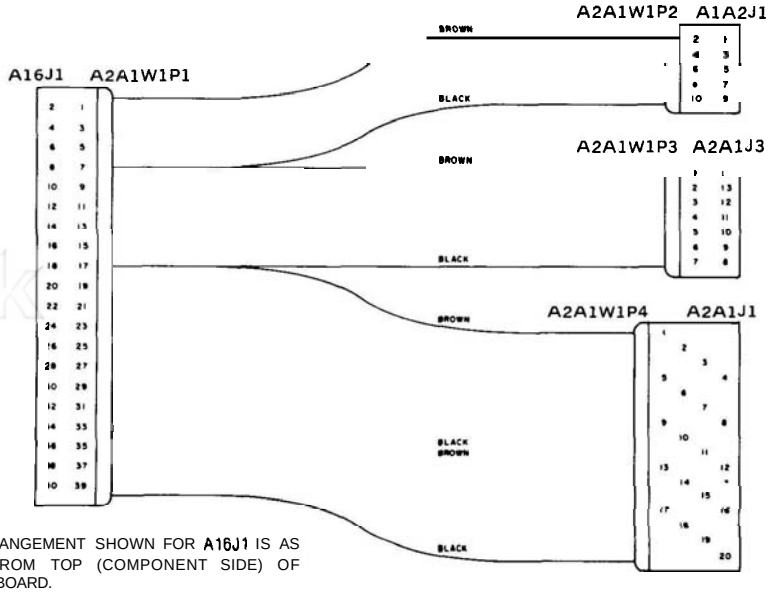

PIN ARRANGEMENT SHOWN FOR A16J1 IS AS SEEN FROM TOP (COMPONENT SIDE) OF MOTHERBOARD.

A1A2J1 PINS ARE SHOWN AS SEEN FROM BOTTOM (CIRCUIT SIDE) of A1A2 DPM DRIVER PC BOARD.

A2A1J3 PINS ARE SHOWN AS SEEN FROM TOP OF A2A1J3 (FRONT OF REAR SWITCH BOARD ASSEMBLY). NOTE THAT A2A1J3 CONTACTS 1, 7, 8, AND 14 ARE NOT USED. ALSO THAT PIN NUMBERS MOLDED ONTO PLUG A2A1W1P3 DO NOT NECESSARILY CORRESPOND WITH A2A1J3 CONTACT NUMBERS.

A2A1W1P4 PLUGS DIRECTLY INTO AND IS SOLDERED TO PC BOARD PLATED-THRU HOLES, COLLECTIVELY DESIGNATED A2A1J1.

PIN ARRANGEMENT SHOWN HERE IS AS SEEN FROM FRONT OF A2A1 FRONT SWITCH BOARD ASSEMBLY

FIGURE 8-11. A2W1 RIBBON CABLE, CONNECTIONDIAGRAM

A2A1W2
RIBBON CABLE ASSEMBLY

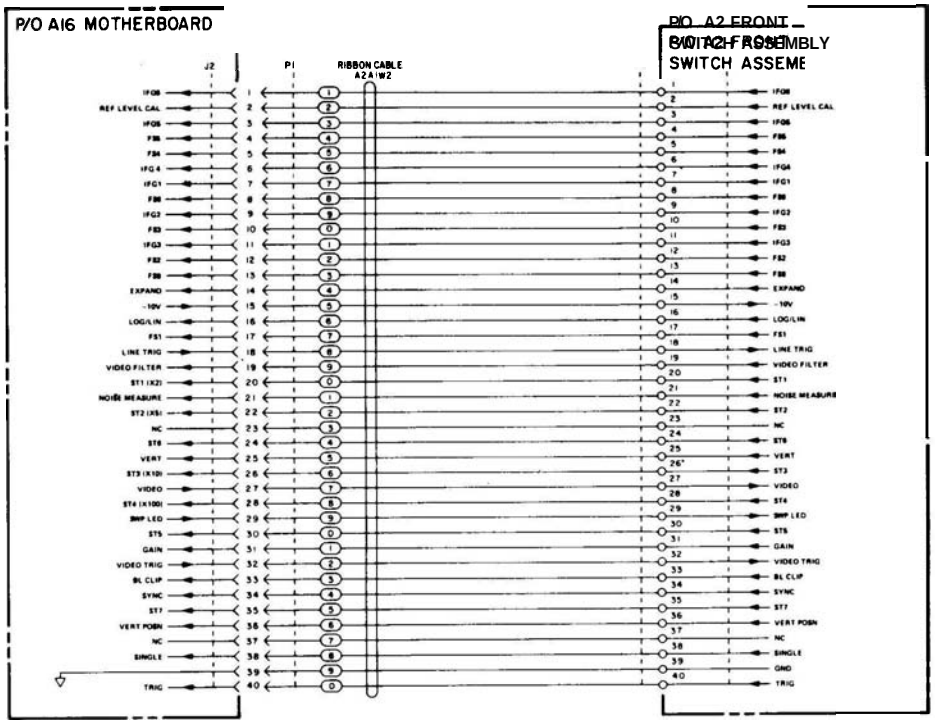

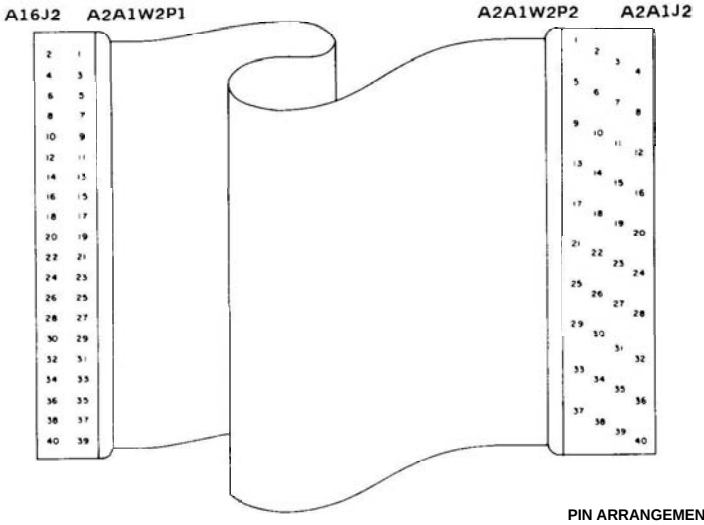

PIN ARRANGEMENT SHOWN FOR A16J2 IS AS SEEN FROM TOP (COMPONENT SIDE) OF MOTHERBOARD.

A2A1W2P2 PLUGS DIRECTLY INTO AND IS SOLDERED TO PC BOARD PLATED-THRU HOLES, COLLECTIVELY DESIGNATED A2A1J2.

PIN ARRANGEMENT SHOWN HERE IS AS SEEN FROM FRONT OF A2A1 FRONT SWITCH BOARD ASSEMBLY.

FIGURE 8-12. A2W2 RIBBON CABLE, CONNECTION DIAGRAM

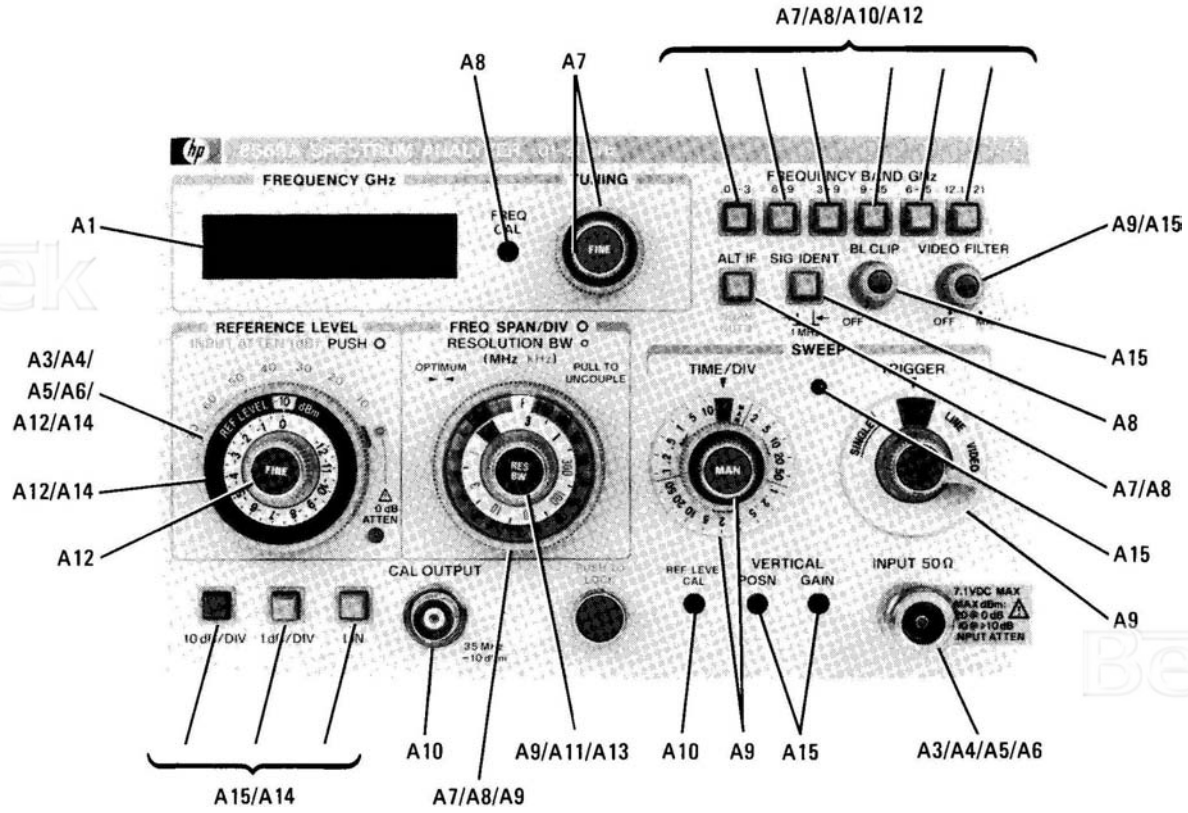

ASSEMBLY NUMBERS REFER TO SCHEMATICS WHERE DIAGRAM OF INDICATED SWITCH OR CONTROL IS LOCATED. DIAGRAMS OF ALL SWITCHES AND CONTROLS ARE ALSO LOCATED ON THE A2 FRONT PANEL SWITCH ASSEMBLY SCHEMATIC.

FIGURE 8-13. CROSS-REFERENCE OF FRONT PANEL SWITCHES AND CONTROLS TO RELATED ASSEMBLIES

MNEMONIC	DESCRIPTION
ALT IF	ALTERNATE IF (LOW = ALT IF = 2.9925 GHz)
BL CLIP	BASELINE CLIPPER VOLTAGE
BW1	BANDWIDTH CONTROL LINES
BW2	
BW3	
BW4	
BW5	
C TUNE	COARSE FREQUENCY TUNING VOLTAGE
EXPAND	SELECTS EXPANDED DISPLAY FOR 1 dB/DIV LOG MODE
FINE TUNE	FINE FREQUENCY TUNING VOLTAGE
FREQ ZERO	FREQUENCY ZERO ADJUST VOLTAGE
FS1	FREQUENCY SPAN CONTROL LINES. FS6 SELECTS YTO FM OR MAIN COIL INPUT (+15V=FM COIL). FS9 SELECTS FULL SPAN OR PER DIVISION (+15V=FULL SPAN).
FS2	
FS3	
FS4	
FS5	
FS6	
FS7	
FS8	
FS9	
GAIN	VERTICAL GAIN VOLTAGE
H2	LOW=SECOND HARMONIC BAND
H3	LOW=THIRD HARMONIC BAND
IFG1	CONTROL IF STEP GAIN AMPLIFIERS
IFG2	
IFG3	
IFG4	
IFG5	CONTROL LOG/LINEAR AMPLIFIERS
IFG6	
LINE TRIG	LINE TRIGGER SIGNAL
LOG/LIN	SELECTS LOG OR LINEAR DISPLAY (+15V=LOG; –10V=LIN)
MAN SCAN	MANUAL SCAN VOLTAGE
NOISE MEASURE	SELECTS MAXIMUM VIDEO FILTERING
PENLIFT	PENLIFT SIGNAL
PM	SELECTS PLUS OR MINUS HARMONIC CONVERSION
REF LEVEL CAL	REFERENCE LEVEL CALIBRATION VOLTAGE
REF LEVEL CW	REFERENCE LEVEL FINE UPPER LIMIT VOLTAGE
REF LEVEL WP	REFERENCE LEVEL FINE CONTROL WIPER VOLTAGE
SIG ID	SIGNAL IDENTIFIER CONTROL (GROUND=ON)
SINGLE	SINGLE SWEEP TRIGGER VOLTAGE
ST1	SCAN TIME CONTROL LINES. ST6 ENABLES FAST SCAN TIMES.
ST2	
ST3	
ST4	
ST5	
ST6	
ST7	
SYNC	SWEEP SYNC CONTROL (LINE OR VIDEO)
TRIG	SWEEP TRIGGER (SINGLE OR FREE RUN)
TUNE REF	FREQUENCY TUNING REFERENCE VOLTAGE
VERT	VERTICAL VIDEO SIGNAL VOLTAGE
VERT POSN	VERTICAL POSITION VOLTAGE
VIDEO	VIDEO SIGNAL
VIDEO FILTER	VIDEO FILTER LEVEL VOLTAGE
VIDEO TRIG	VIDEO SWEEP TRIGGER VOLTAGE

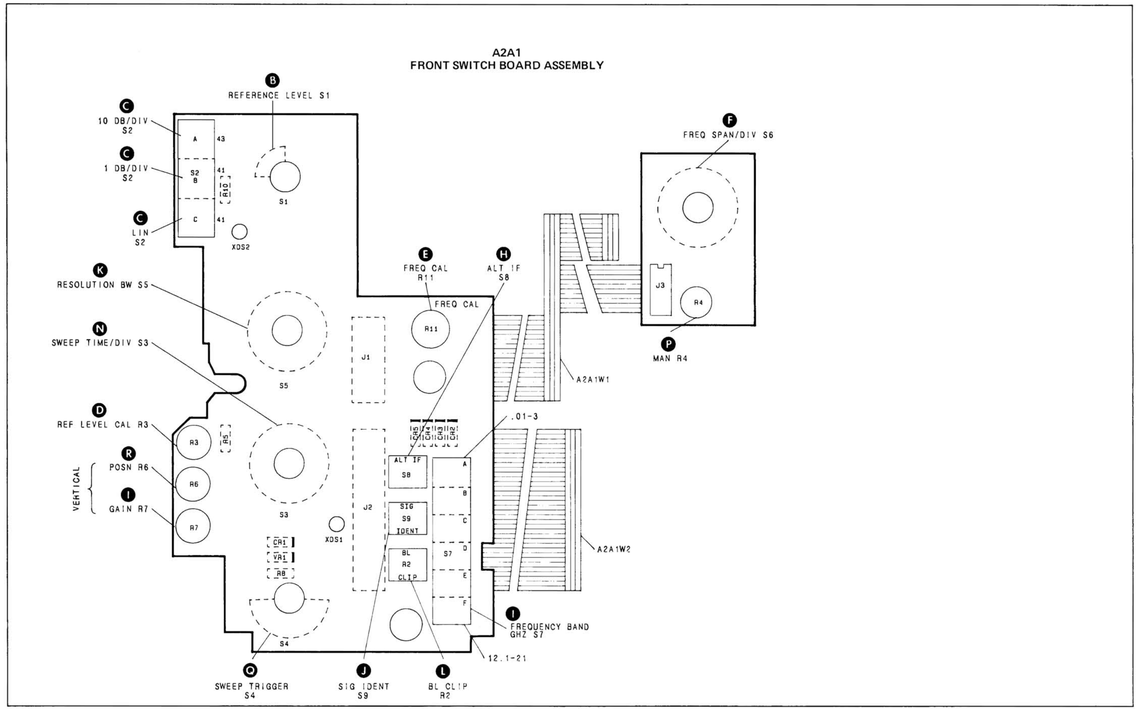

FIGURE 8-14. FRONT PANEL SWITCH ASSEMBLY A2, COMPONENT LOCATIONS

A2 FRONT SWITCH ASSEMBLY
08559-60065 (1 OF 2)

J1

PIN	SIGNAL	TO/FROM	FUNCTION BLOCK
1	NC		
2	NC		
3	-12V	REARPANEL P1:28	U
4	FREQ ZERO	A5	I
5	FINE TUNE	A7	G
6	REF LEVEL CW	A12	D
7	NC		
8	REF LEVEL WP	A12	D
9	TUNE REF (-10V)	A7	G
10	CTUNE	A7	G
11	GND	A16	U
12	+15.5V	A7	U
13	+15V	REARPANEL P1:29	U
14	M3	A7, A8, A10, A12	I
15	PM	A7, A8, A10, A12	I
16	M2	A7, A8, A10, A12	I
17	FST	A8	F
18	FSI	A7, A8	F
19	DIG ID	A8	J
20	ALT IF	A7, A8	M

J2

PIN	SIGNAL	TO/FROM	FUNCTION BLOCK
1	IFG6	A14	B
2	KEY LEVEL CAL	A10	D
3	IFG5	A14	B
4	FSS	A3	F
5	FSK	A3	F
6	IFG4	A14	B
7	IFG3	A12	B
8	FSK	A7, A5	F
9	IFG2	A12	B
10	FS2	A3	F
11	IFG1	A12	B
12	FS2	A3	F
13	FSB	A8	F
14	EXPAND	A15	C
15	10V	A16	N
16	LOG/LIN	A14	B
17	YS1	A3	F
18	LINE TRIG	REARPANEL P1:31	D
19	VIDEO FILTER	A3	M
20	ST1	A3	N
21	NOISE MEASURE	A3	M
22	ST2	A3	N
23	NC		
24	ST4	A3	N
25	VERT	A9, A15	M
26	ST3	A3	N
27	VIDEO SHIFT	A8	M
28	ST5	A3	N
29	SAT LED	A15	B
30	ST6	A3	N
31	GAIN	A15	F
32	VIDEO TRIG	A15	C
33	BL CLIP	A15	L
34	SYNC	A3	C
35	ST7	A3	N
36	VERT POS	A15	K
37	NC		
38	SINGLE	A3	C
39	GND	A10	U
40	TRIG	A3	C

J3

PIN	SIGNAL	TO/FROM	FUNCTION BLOCK
1		NOT USED	
2	MAN SCAN	A9	F
3	BW3	A3, A11, A13	K
4	NC		
5	BW2	A11	K
6	BW1	A9	K
7		NOT USED	
8		NOT USED	
9	BW4	A11	K
10	BW1	A9	K
11	+15V	REARPANEL P1:29	U
12	GND	A16	U
13	-12.6V	REARPANEL P1:29	NC
14		NOT USED	

P/O A2A1 FRONT SWITCH BOARD ASSEMBLY
08559-60069

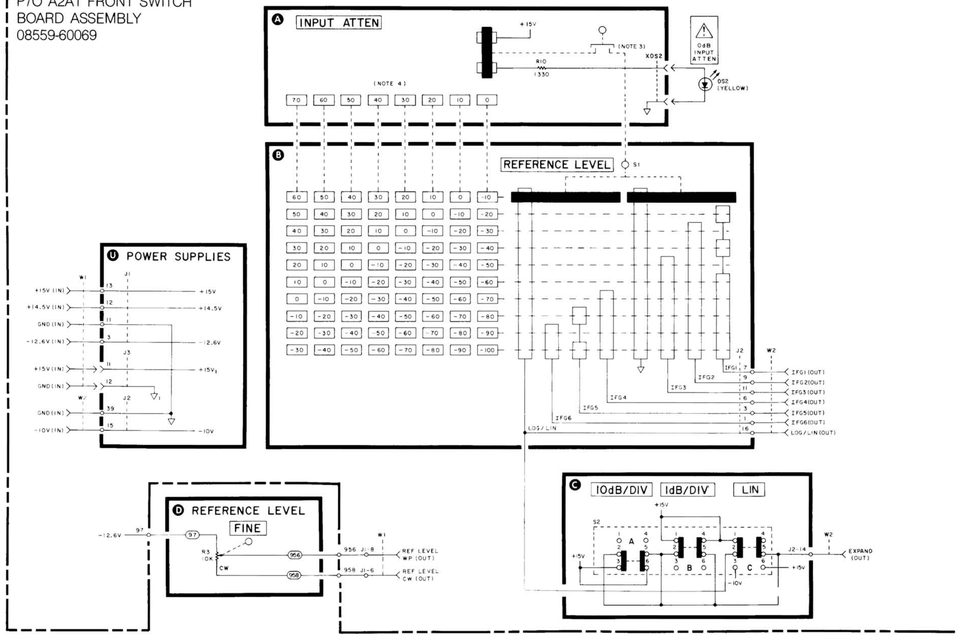

A2

SERIAL PREFIX: 2347A

FIGURE 8-15. FRONT PANEL SWITCH ASSEMBLY A2, SCHEMATIC DIAGRAM (1 OF 2)

A2 FRONT SWITCH ASSEMBLY
08559-60065 (2 OF 2)

P/O A2A1 FRONT SWITCH BOARD ASSEMBLY
08559-60069

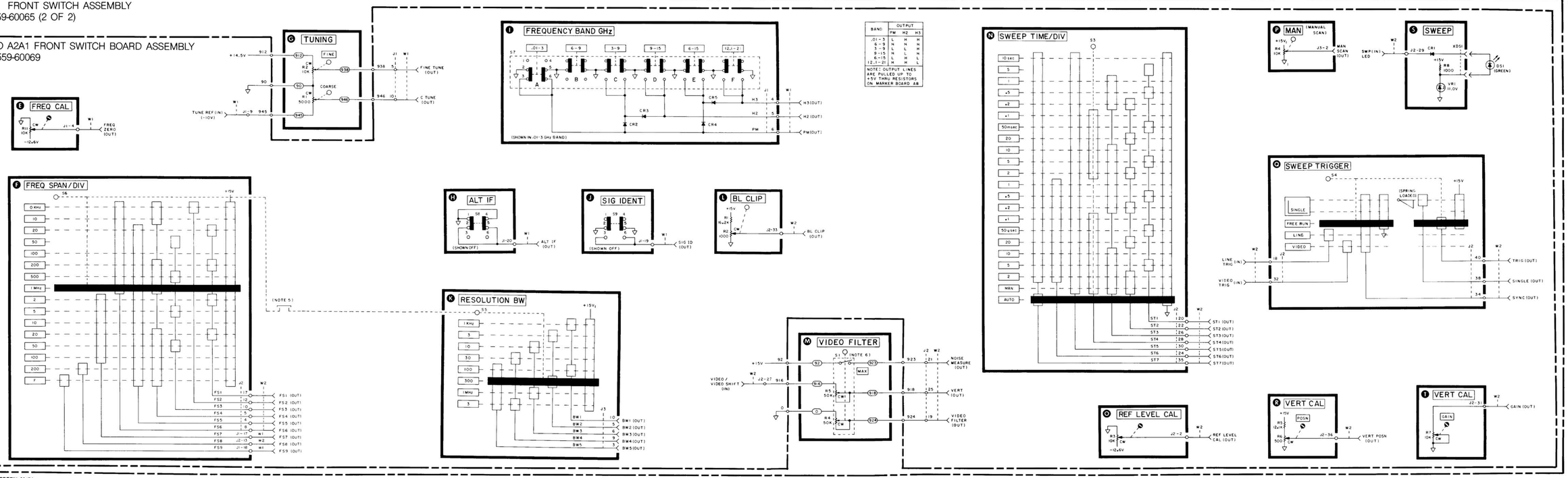

NOTES:

1. REFERENCE DESIGNATORS WITHIN THIS ASSEMBLY ARE ABBREVIATED, PREFIX ABBREVIATION WITH ASSEMBLY NUMBER FOR COMPLETE REFERENCE DESIGNATOR.
2. UNLESS OTHERWISE INDICATED:
   RESISTANCE IN OHMS (Ω)
   CAPACITANCE IN MICROFARADS (µF)
   INDUCTANCE IN MICROHENRIES (µH)
3. INPUT ATTEN CONTROL IS ACTUATED BY PUSHING IN ON THE CONTROL KNOB WHICH COUPLES INPUT ATTEN TO REFERENCE LEVEL.
4. INPUT ATTEN AND REFERENCE LEVEL CONTROLS ARE MECHANICALLY COUPLED TO PROVIDE TEN REFERENCE LEVEL SETTINGS FOR EACH INPUT ATTENUATION SETTING.
5. FREQ SPAN/DIV AND RESOLUTION BW CONTROLS CAN BE MECHANICALLY COUPLED TO PROVIDE OPTIMUM RESOLUTION BY PUSHING IN ON THE CONTROLS.
6. R4, R5, AND S1 ARE ACTUALLY ONE COMPONENT.

FIGURE 8-15. FRONT PANEL SWITCH ASSEMBLY A2, SCHEMATIC DIAGRAM (2 OF 2)

RF SECTION CIRCUIT DESCRIPTIONS

List of parts included in RF Section.

INPUT ATTENUATOR ASSEMBLY A3, CIRCUIT DESCRIPTION

The HP 8559A Input Attenuator Assembly A3 is a 50 ohm, precision, coaxial step attenuator. Attenuation in 10-dB steps from 0 dB to 70 dB is accomplished by switching the signal path through one or more of three resistive pads in a predetermined sequence by the INPUT ATTEN control. The Input Attenuator Assembly A3 is not field serviceable.

FIRST MIXER ASSEMBLY A4, CIRCUIT DESCRIPTION

The First Mixer Assembly A4 is a sealed microcircuit (shown in Figure 8-19), that is not field serviceable and must be replaced with either a new or factory rebuilt unit. In the mixer assembly, the .01 to 21 GHz input signals are combined with the first LO signal (3.01 to 6.04 GHz) generated by the YIG-Tuned Oscillator Assembly A6. Fundamental mixing is used for the two lowest mixing bands, while harmonic mixing is used for the remaining four bands. Fundamental mixing produces the sum and difference frequencies of the input and the LO frequency. The fundamental mixing equation is:

$$F_s = F_{lo} \pm F_{if}$$

Where: F_s = signal frequency
F_{lo} = local oscillator frequency
F_{if} = intermediate frequency

Harmonic mixing alters the mixing equation as shown:

$$F_s = NF_{lo} \pm F_{if}$$

Where: N = the harmonic number

An alternate first IF is used to eliminate the problem of IF feedthrough (baseline lift) that occurs when a signal of the same frequency as the IF frequency (3.0075 GHz) is present at the input. The second LO frequency is lowered by 15 MHz (from 2.6861 GHz to 2.6711 GHz) to establish the alternate first IF at 2.9929 GHz. The first LO is also shifted to keep the signal on screen. The shift equation is:

$$\text{Frequency Shift} = \pm \frac{15\text{MHz}}{N}$$

Where: N = the harmonic number

A 17–23 MHz bandpass filter, in the Second Converter Assembly A5 housing, follows the first IF and is centered at 3 GHz. The wide bandpass accommodates signals in either the regular or alternate IF modes.

A schematic of the First Mixer Assembly A4 is shown in Figure 8-25. The output of the YTO is coupled into the signal path ahead of the internal mixer. Mixing diode bias is supplied from the Step Gain Assembly A12. A different bias current is used for each harmonic to minimize conversion loss and flatness problems. In addition to mixer bias, the First Mixer Assembly A4 requires a +14.5V and –10V to power and bias the transistor buffer amplifier at its output. Conversion loss of the mixer is about –12 dB.

FIRST MIXER ASSEMBLY A4, TROUBLESHOOTING

Typically, a bad first mixer results in at least a 15 to 20 dB loss in sensitivity (i.e., the amplitude of displayed signals is 15 to 20 dB low). There are, however, other factors that can affect spectrum analyzer sensitivity that should be checked. The measurement of power levels along the signal path can give a good indication of where the loss is occurring. The output of the Second Converter Assembly A5 offers a convenient point to isolate the RF front-end from the IF section. If the loss appears to be in the front-end, measure the power levels of the first and second local oscillator with a second spectrum analyzer. Next, measure the supply and bias voltages at the first mixer. To access the push-on connectors of the first mixer's bias and supply lines, it is helpful to remove the instrument's bottom guide-rail.

CAUTION

The First Mixer Assembly A4 can be damaged by electro-static discharge. Tools and hands should be grounded before handling this assembly. It is also possible to damage the mixer diode with an ohmmeter. Damage may occur with as little as 3V **open-circuit-voltage** between the ohmmeter probes. Therefore, dc testing of the assembly is not recommended. If it becomes necessary to remove the rigid coaxial cable connecting the first mixer output and the second mixer input, be careful not to damage the Low Pass Filter Assembly **FL1** internal to the cable. The filter assembly is very sensitive to bending.

Set HP 8559A controls as follows:

FREQUENCY BAND GHz	.01 – 3
TUNING	.035 GHz
FREQ SPAN/DIV	1 MHz
RESOLUTIONBW	1 MHz
INPUT ATTEN	10 dB
REFERENCELEVEL	– 10 dB
REFLEVELFINE	0
Amplitude Scale	1 dB/DIV
SWEEP TIME/DIV	AUTO
SWEEPTRIGGER	FREE RUN
VIDEOFILTER	OFF
BLCLIP	OFF
SIGIDENT	OFF
ALTIF	OFF

Connect the CAL OUTPUT signal to the RF INPUT

NOTE

Before making the following adjustments, measure and note the first mixer bias voltage **(A16TP1).** This permits the instrument to be returned to calibration if the first mixer is good.

Adjust the V1 potentiometer (A12R72 on the Step Gain Amplifier Assembly A12) through its range and observe the changes in the displayed signal peak and the bias voltage. With a good mixer, two changes are observed: the displayed signal peaks at some point in the adjustment (usually with about – 5V or – 6V of bias voltage) and the bias voltage (A16TP1) ranges from – 9V to + 2 ±0.5V. If all of these characteristics are not present, the mixer is probably damaged.

SECOND CONVERTER ASSEMBLY A5, CIRCUIT DESCRIPTION

The IF from the First Mixer Assembly A4 is coupled into the Second Converter Assembly A5 bandpass filter through coupling loop L3. Three circular, slug-tuned cavity resonators, operating as an inductive transmission line, make up the bandpass filter. The filter forms a high-Q circuit centered at 3 GHz with a 23 MHz bandwidth that is required to accommodate the regular and alternate IFs. Coupling loops L4 and L5 provide coupling between the cavities. Loop coupling is also used to couple the 3 GHz IF signal to the second LO output at the mixer diode CR1.

The second LO contains varactor diodes that are controlled by a voltage from the Marker Assembly A8. The diodes shift the frequency of the second LO either 15 MHz (ALT IF) or ±1 MHz (SIG ID). The varactor control voltage is always between 1V and 28V and corresponds to the oscillator frequency; increasing the voltage increases the frequency.

Both the second LO and the 3 GHz IF signal are coupled into mixing diode CR1, generating a difference frequency of 321.4 MHz that is coupled through the matching filter (C3, L2, C4) to the Third Converter Assembly A10. The matching filter is a passive network designed to match the impedance of the second mixer to the 50 ohm impedance of the Third Converter Assembly A10. The match is optimized in both IF modes by adjusting L2 (2nd MIXER MATCH).

SECOND CONVERTER ASSEMBLY A5, TROUBLESHOOTING

Verify that the Second Converter Assembly A5 supply voltages are correct.

If the displayed signal amplitude varies between ALT IF and REG IF, perform and verify the bandpass and second LO frequency adjustments.

Second LO Frequency: A failure in the Second Converter Filter Assembly A5A2 can cause the Second Converter Oscillator A5A1 to oscillate at about 3 GHz. This symptom can occur when the delay circuit in the filter assembly does not delay the application of the +13V bias voltage. To test the delay, observe the +13V bias as the instrument is turned on. There should be a noticeable delay before the +13V is applied to the line. The −10V supply, on the other hand, should rise gradually. If the +13V and the −10V respond properly, check the varactor voltage, varactor diodes, and the cavity adjustment as the possible source of the second LO frequency error.

Second LO Fails to Oscillate: The Second Converter Oscillator Assembly A5A1 can intermittently fail to oscillate after turn-on. If this symptom occurs, replace the entire assembly. Before removing the defective circuit board, note the orientation of components, leads, and hardware; orientation is critical to proper operation. To prevent damage to the replacement circuit board, do not over-tighten the hex-head antenna screw during installation.

Second Converter Bandpass Shape: Low signal power from the First Mixer Assembly A4 can distort the second converter bandpass filter shape. Excessive ripple in the bandpass can be the result of a mismatch in the signal path preceding the Second Converter Assembly A5. An input attenuator setting of 0 dB can cause such a mismatch. The second converter mixer diode or Mixer Match adjustment can also affect the bandpass ripple.

Residual FM: Residual FM can originate from the Marker Assembly A8 Second LO Driver, which supplies the varactor bias voltage, or from within the second LO itself.

YIG-TUNED OSCILLATOR ASSEMBLY A6, CIRCUIT DESCRIPTION

The YIG-Tuned Oscillator Assembly A6 consists of three parts: a sealed magnet assembly that encloses the YIG sphere and oscillator; a bias board that uses discrete components to establish the oscillator and amplifier bias, as well as protect the bias supply from noise and voltage overloads; and a mu-metal magnetic-shield can. Field service of the YIG-Tuned Oscillator Assembly A6 is limited to replacement with a new or factory rebuilt unit.

The YIG-Tuned Oscillator A6 is a transistor thin-film microcircuit. It uses a Yttrium-Iron-Garnet (YIG) sphere as the frequency determining structure. The YIG sphere is placed in the gap of an electromagnet to provide a magnetic tuning structure whose field (and thereby the oscillator's frequency) is linearly proportional to the drive current from the Frequency Control Assembly A7.

The Main coil is used for wide range sweeping and tuning with the coil current varying from approximately 69 mA to 138 mA. The FM coil performs these functions for narrow spans (1 MHz/div and less) with its coil current varying from approximately – 18 mA to + 18 mA.

YIG-TUNED OSCILLATOR ASSEMBLY A6, TROUBLESHOOTING

Power Holes: Power holes that occur at the same point of the sweep in all bands are most commonly caused by the YIG-Tuned Oscillator Assembly A6.

Power holes above 18 GHz are most commonly caused by the type-N RF input connector on the HP 8559A front panel.

Residual FM: The primary cause of residual FM involving the first LO is the Frequency Control Assembly A7.

TABLE 8-3. RF SECTION, REPLACEABLE PARTS

Reference Designation	HP Part Number	CD	Qty	Description	Mfr Code	Mfr Part Number
A3	5086-7362	8	1	INPUT ATTENUATOR ASSEMBLY	,8480	5086-7362
A3	5086-6362	6	1	RESTORED 5086-7362, EXCHANGE REQUIRED	28480	5086-6362
A4	5086-7302	6	1	FIRST MIXER ASSEMBLY	28480	5086-7302
A4	5086-6302	4	1	RESTORED 5086-7302, EXCHANGE REQUIRED	28480	5086-6302
A5	08559-60002	0	1	SECOND CONVERTER ASSEMBLY (Does not include A5A2)	28480	08559-60002
A5C3	0160-5435	5	1	CAPACITOR-FDTHRU 8.5PF 8% 200V CER	28480	0160 5435
A5C4	0140-0075	7	1	CAPACITOR-FDTHRU 22PF 10% 500V MICA	72982	666 353-31A0-223K
A5CR1	1901-0951	3	1	DIODE-SM SIG SCHOTTKY	28480	1901-0951
A5CR2	0122-0072	6	2	DIODE-VVC 2.2PF 5% C3/C25-MIN=4.5	04711	BB105B
A5CR3	0122-0072	6		DIODE-VVC 2.2PF 5% C3/C25-MIN=4.5	04713	BB105B
A5FL1	9135-0002	8	4	FILTER-LOW PASS SOLDER-TERMS	77095	51-744-018
A5FL2	9135-0002	8		FILTER-LOW PASS SOLDER-TERMS	33095	51-744-018
A5FL3	9135-0002	8		FILTER-LOW PASS SOLDER-TERMS	33095	51-744-018
A5FL4	9135-0002	8		FILTER-LOW PASS SOLDER-TERMS	33095	51-744-018
A5J1	1250-1157	2	1	CONNECTOR-RF SMA FEM THD-HOLE 50-OHM	28480	1250-1157
A5J2	1250-1435	9	1	CONN:RF: 500 OHM: SMC	28480	1250-1435
A5J3	1250-0691	7	1	CONNECTOR-RF SMB M SGL-HOLE-FR 50-OHM	28480	1250-0691
A5L1	9100-2255	4	1	INDUCTOR RF-CH-MLD 470NH 10% .105DX.26LG	28480	9100-2255
A5L2	08559-80001	5	1	COIL, SECOND CONVERTER OUTPUT	28480	08559-80001
A5L3	08559-00026	6	1	COUPLING LOOP, INPUT	28480	08559-00026
A5L4	08559-00019	7	2	COUPLING LOOP, FILTER	28480	08559-00019
A5L5	08559-00019	7		COUPLING LOOP, FILTER	28480	08559-00019
A5MP1	08559-20003	1	1	COVER, OSCILLATOR HOUSING	,8480	08559-20003
A5MP2	08559-20002	6	1	CAVITY BLOCK	28480	08559-20002
A5MP4	08559-20036	0	1	POST, COUPLING	28480	08559-20036
A5MP5	08559-00018	6	1	MOUNTING TAB, MIXER DIODE	28480	08559-00018
A5MP6	08559-20041	7	1	BOARD COVER	28480	08559-20041
A5A1	08559-60031	9	1	RCCOND COVERTER OSCILLATOR ASSEMBLY	28480	08559-60031
A5A2	08559-60034	2	1	SECOND CONVERTER FILTER ASSEMBLY (Not included when ordering A5 Assembly)	28480	08559-60034
A5A2C1	0160-2055	9	1	CAPACITOR FXD 01UF+80 20% 100VDC CER	28480	0160 2055
A5A2C2	0180 0078	8	1	CAPACITOR FXD 1301F+ 20% 20VDC TA	56289	150D137X002052
A5A2C3	0180-2288	6	1	CAPACITOR-FXD 220UF+-10% 10VDC TA	56289	150D227X9010S2
A5A2Q1	1853-0281	9	1	TRANSISTOR PNP 2N2907A SI TO-18 PD=400MW	04713	2N2907A
A5A2Q2	1854-0404	0	2	TRANSISTOR NPN SI TO-18 PD=360MW	28480	1854-0404
A5A2Q3	1854-0404	0		TRANSISTOR NPN SI TO-18 PD=360MW	,8480	1854-0404
A5A2R1	0757-0442	9	1	RESISTOR 10K 1% .125W F TC=0+-100	24546	C4-1/8-T0-1002-F
A5A2R2	0757-0394	0	1	RESISTOR 51.1 1% .125W F TC=0+-100	24546	C4-1/8-T0-51R1-F
A5A2R3	0698-3132	4	1	RESISTOR 261 1% .125W F TC=0+-100	24546	C4-1/8-T0-2610-F
A5A2R4	0698-3156	2	3	RESISTOR 14.7K 1% .125W F TC=0+-100	24546	C4-1/8-T0-1472-F
A5A2R5	0698-3156	2		RESISTOR 14.7K 1% .125W F TC=0+-100	24546	C4-1/8-T0-1472-F
A5A2R6	0698-3156	2		RESISTOR 14.7K 1% .125W F TC=0+-100	24546	C4-1/8-T0-1472-F
A5A2R7	0698-3452	1	1	RESISTOR 147K 1% .125W F TC=0+-100	24546	C4-1/8-T0-1473-F
A5A2R8	0757-0199	3	1	RESISTOR 21.5K 1% .125W F TC=0+-100	24546	C4-1/8-T0-2152-F
A5A2TP1	1251-0600	0	1	CONNECTOR-SGL CONT PIN 1 14 MU BSC SZ SQ	28480	1251-0600
	0380-0677	3	3	SPACER-RVT-DN .156 IN-LG .152-IN ID	28480	0380-0677
	0360-0002	6	1	TERMINAL-SLDR LUG PL-MTG FOR-#2-SCR	211400	0360-0002
	0380-0573	8	1	STANDOFF-HEX .625 IN-LG 10 32THD	28480	0380-0573
	0520-0282	4	2	SCREW-MACH 2-56 .555-IN-LG RD-HD-SLT BRS	28480	0520-0282
	1251-3720	1	4	CONNECTOR-SGL CONT SKT .04 IN-BSC-37 RND	28480	1251-3720
	2190-0557	7	3	WASHER LK INTL T NO. 10 IPS-IN-ID	20480	2190-0557
	2200-0103	2	2	SCREW-MACH 4-40 .25 IN LG PAN HD PO71	20480	2200-0103
	2200-0107	6	16	SCREW MACH 4 40 .375 IN LC PAN-HD-POZI	28480	2200-0107
	2200-0113	4	3	SCREW MACH 4 40 .625 IN LG PAN HD POZI	28480	2200-0113
	2200-0119	0	7	SCREW MACH 4 40 1-IN-LG PAN-HD-POZI	28480	2200-0119
	2200-0156	5	2	SCREW-MACH 4-40 1-IN-LG FLAT-HD-POZI	28480	2200-0156
	2580-0002	4	1	NUT HEX-DBL CHAM 8-32-THD .065-IN THK	28480	2580-0002
	2740-0001	3	4	NUT-HEX-DBL-CHAM 10-32-THD .109-IN THK	28480	2740-0001
	2950-0078	9	1	NUT HEX-DBL-CHAM 10 32-THD .067-IN THK	28480	2950-0078
	3030-0016	6	1	SCREW-SKT HD CAP 6 32 .5 IN LG ALY STL	28480	3030-0016
	3030-0220	4	7	SCREW SKT HD CAP 2 56 .188 IN-LG SST 300	28480	3030-0220
	3030-0397	6	4	SCRCW-SET 10-32 1-IN-LG FLAT-PT BRS	28480	3030-0397
	3030-0415	9	1	SCREW SKT HD CAP 2-56 .094 IN LG SST-300	28480	3030-0415
	3050-0176	1	5	WASHER-FL MTLC NO. 8 .188 IN-ID	20480	3050-0176
	5020-0176	0	4	INSULATOR	28480	5020-0176
A6	5086-7329	7	1	YIG OSCILLATOR ASSEMBLY	28480	5086-7329

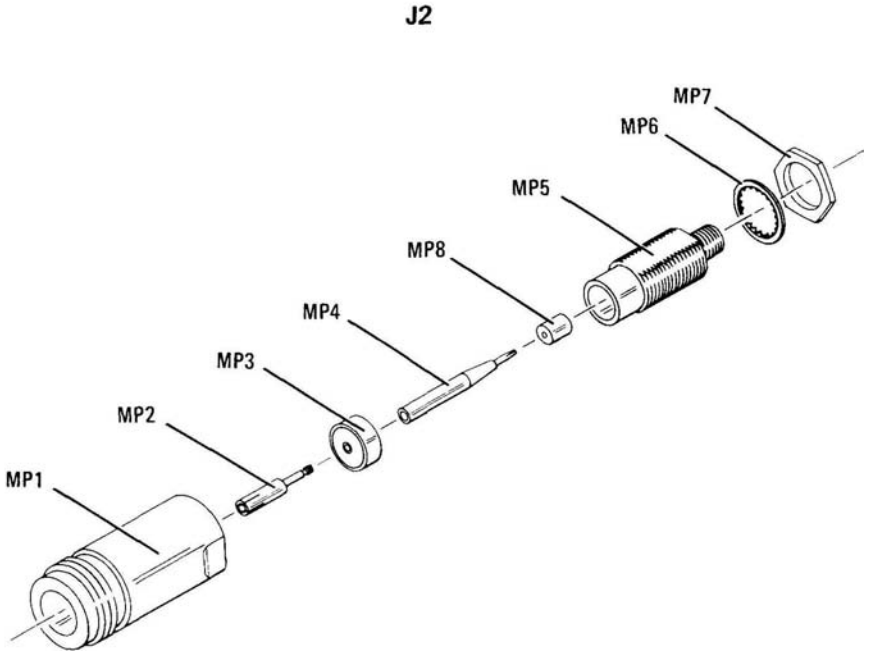

Reference Designation	HP Part Number	Qty	Description	Mfr. Code	Mfr. Part Number
J2	86290-60005	1	Connector Assy (Type N)	28480	86290-60005
J2MP1	1250-0914	1	Body: RF Connector (Type N)	02660	131-150
J2MP2	1250-0915	1	Contact: RF Connector (Type N)	02660	131-149
J2MP3	5040-0306	1	Insulator	28480	5040-0306
J2MP4	08555-20093	1	Center Conductor	28480	08555-20093
J2MP5	08555-20094	1	Body: Bulkhead	28480	08555-20094
J2MP6	2190-0104	1	Washer: Lock 0.439" ID	OOOOJ	OBD
J2MP7	2950-0132	1	Nut: Hex 7/16–28	OOOOJ	OBD
J2MP8	08761-2027	1	Insulator	28480	08761-2027

FIGURE 8-16. RF INPUT CONNECTOR J2

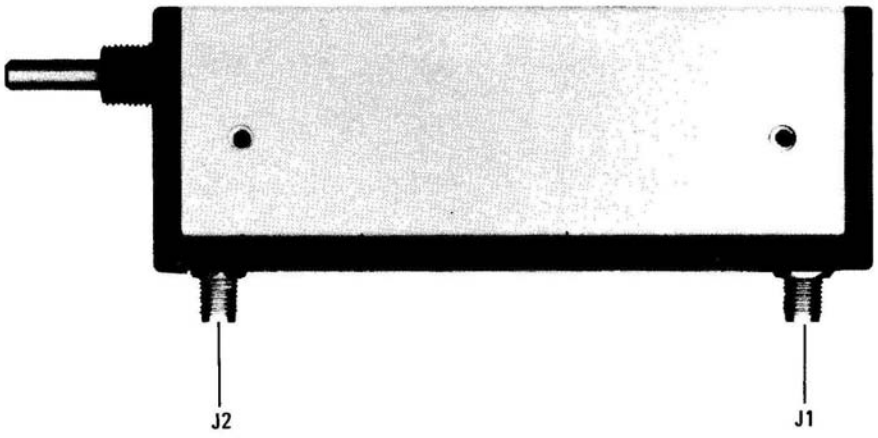

FIGURE 8-17. INPUT ATTENUATOR ASSEMBLY A3

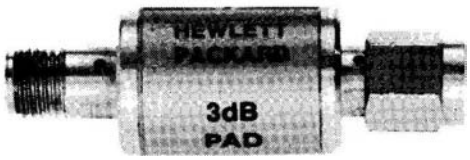

FIGURE 8-18. 3 dB ATTENUATOR ASSEMBLY

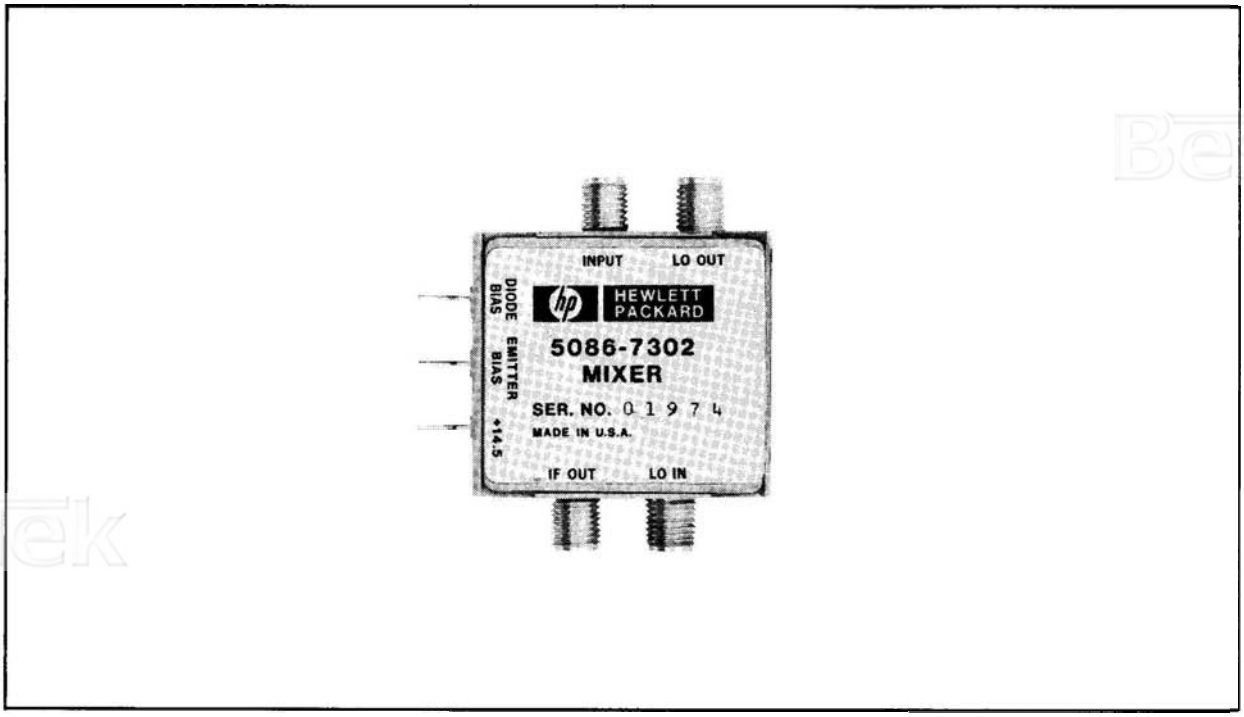

FIGURE 8-19. FIRST MIXER ASSEMBLY A4

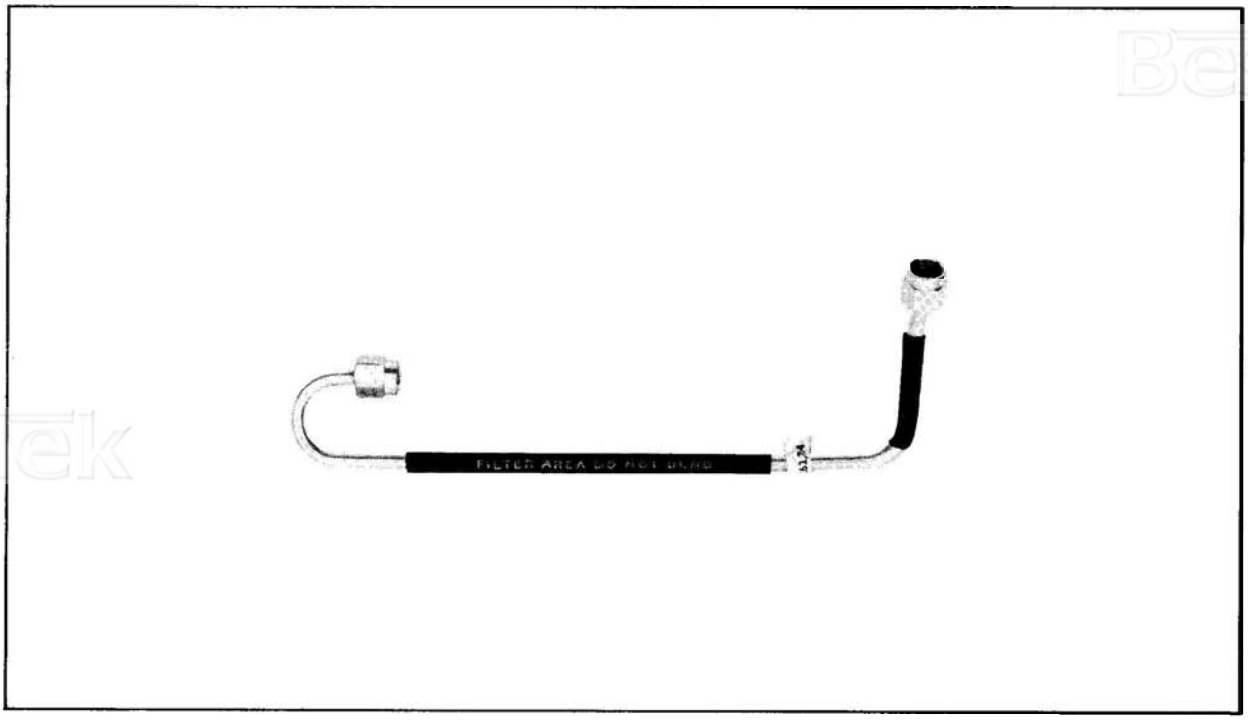

FIGURE 8-20. 4.8 GHz LOWPASS FILTER ASSEMBLY FL1

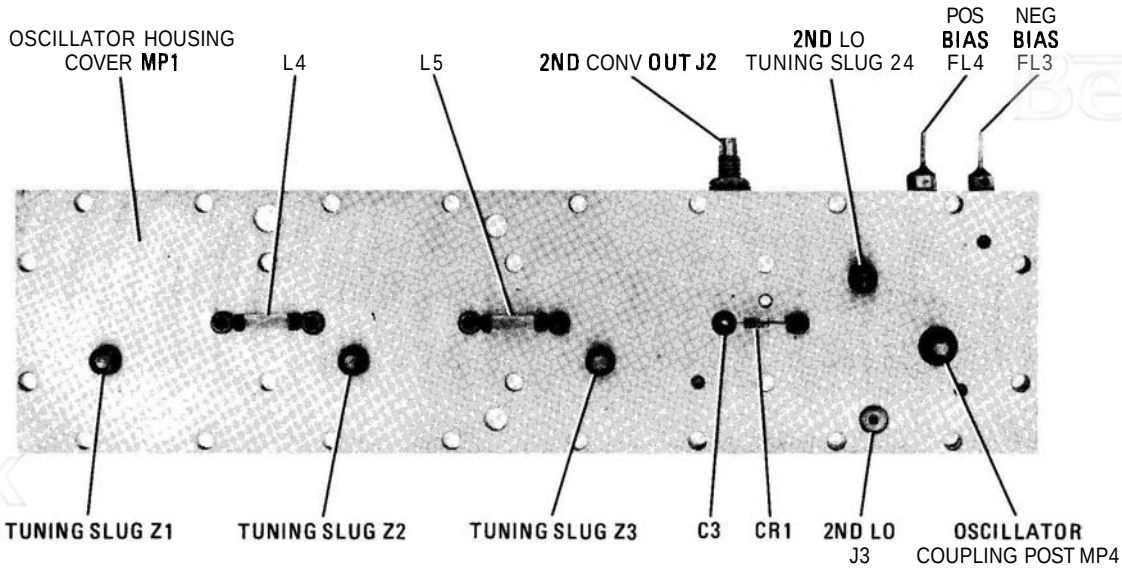

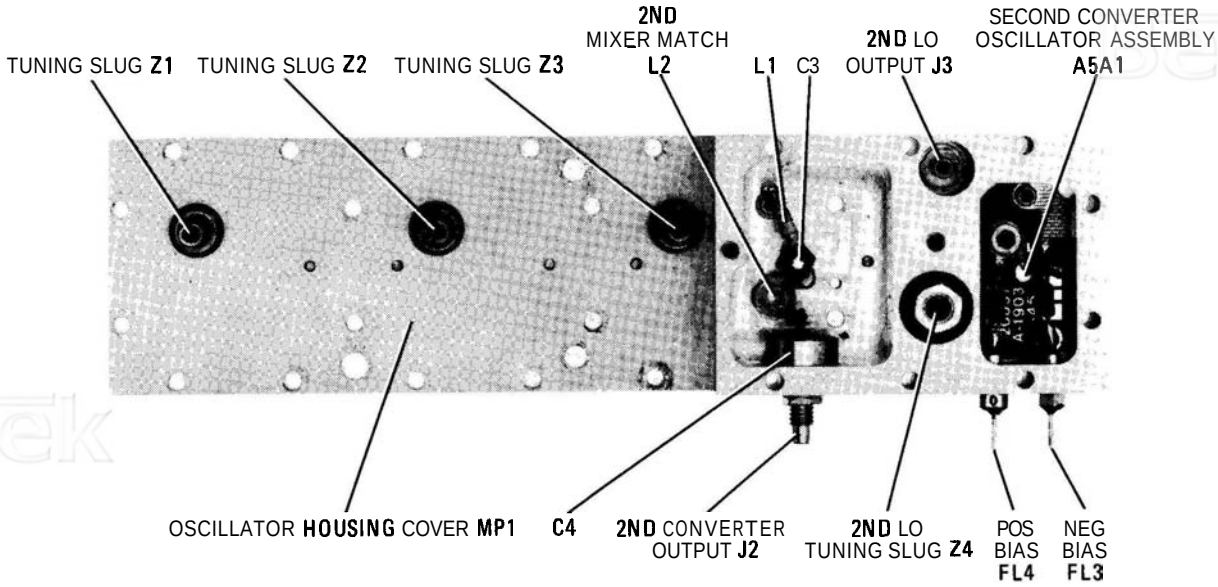

FIGURE 8-21. SECOND CONVERTER ASSEMBLY A5, COMPONENT LOCATIONS (1 OF 2)

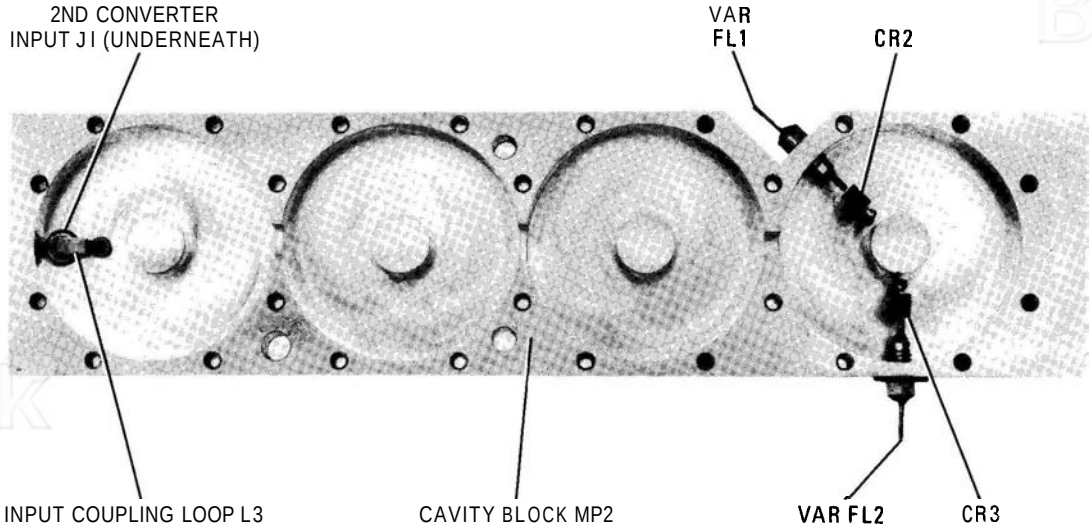

A5A2
SECOND CONVERTER FILTER ASSEMBLY

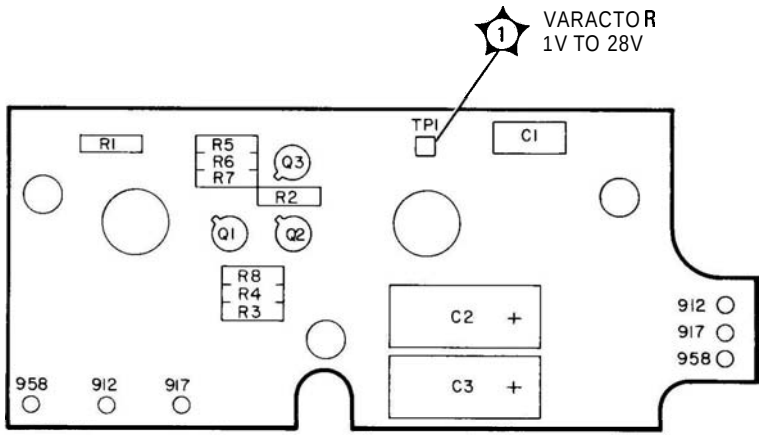

FIGURE 8-21. SECOND CONVERTER ASSEMBLY A5, COMPONENT LOCATIONS (2 OF 2)

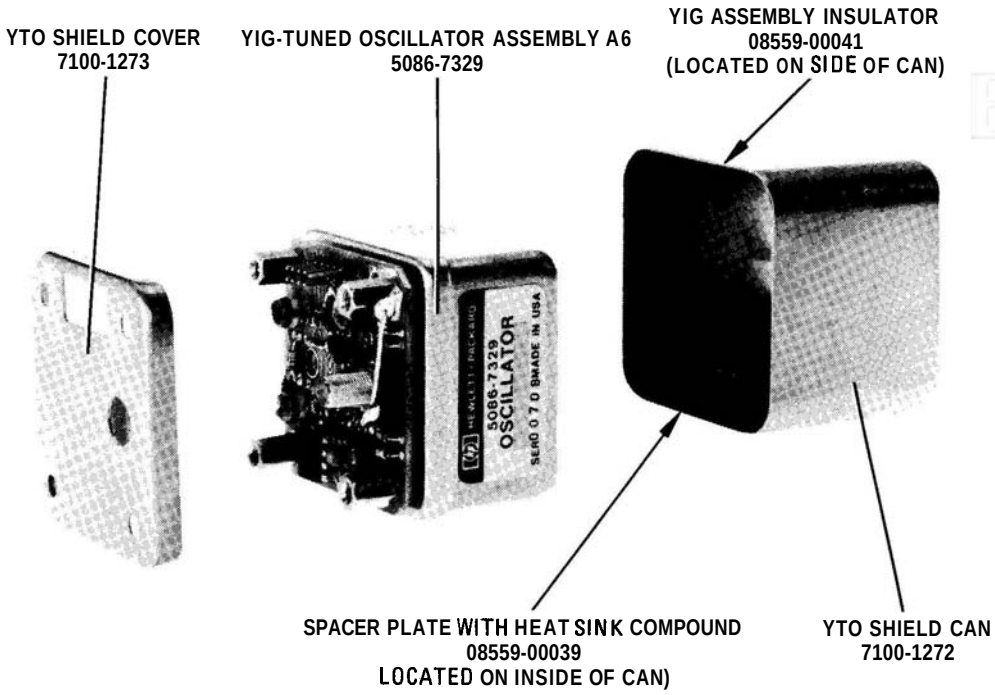

FIGURE 8-22. YIG-TUNED OSCILLATOR ASSEMBLY A6 AND SHIELD COMPONENTS

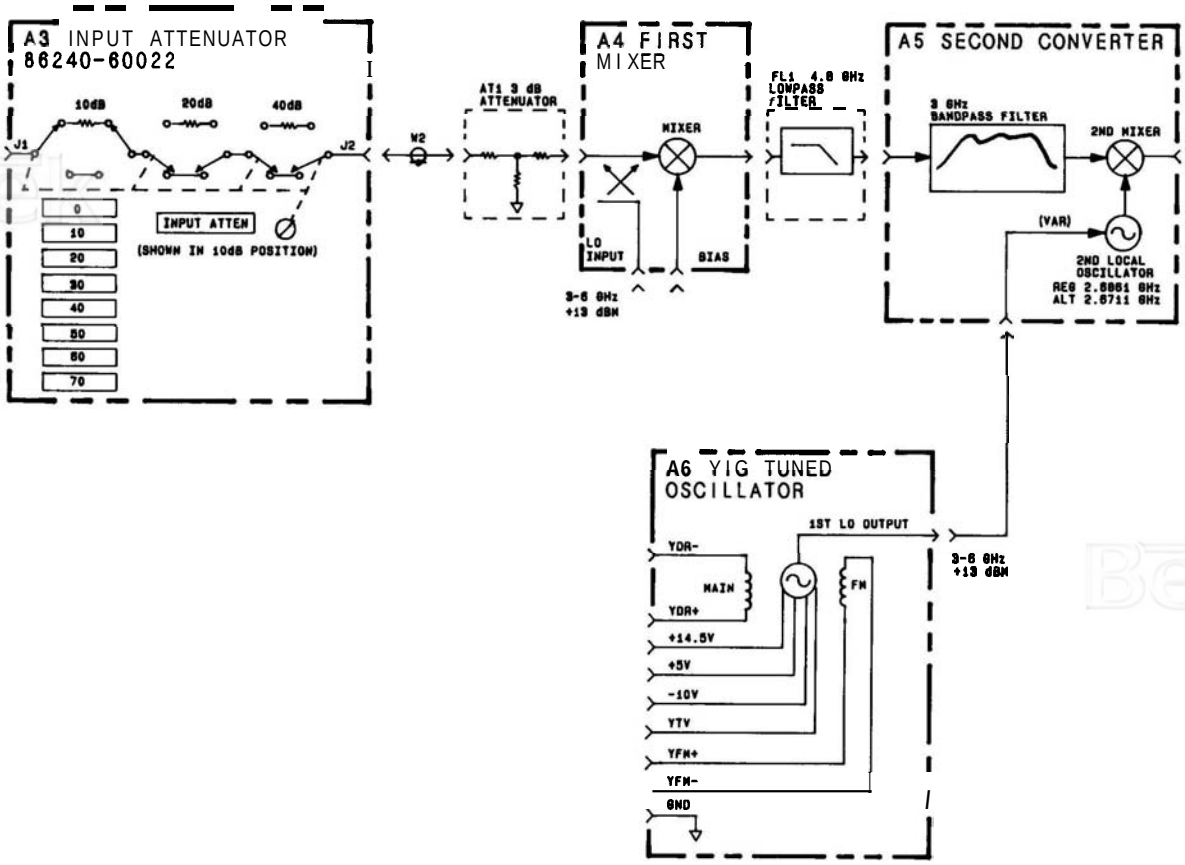

FIGURE 8-23. RF SECTION, BLOCK DIAGRAM

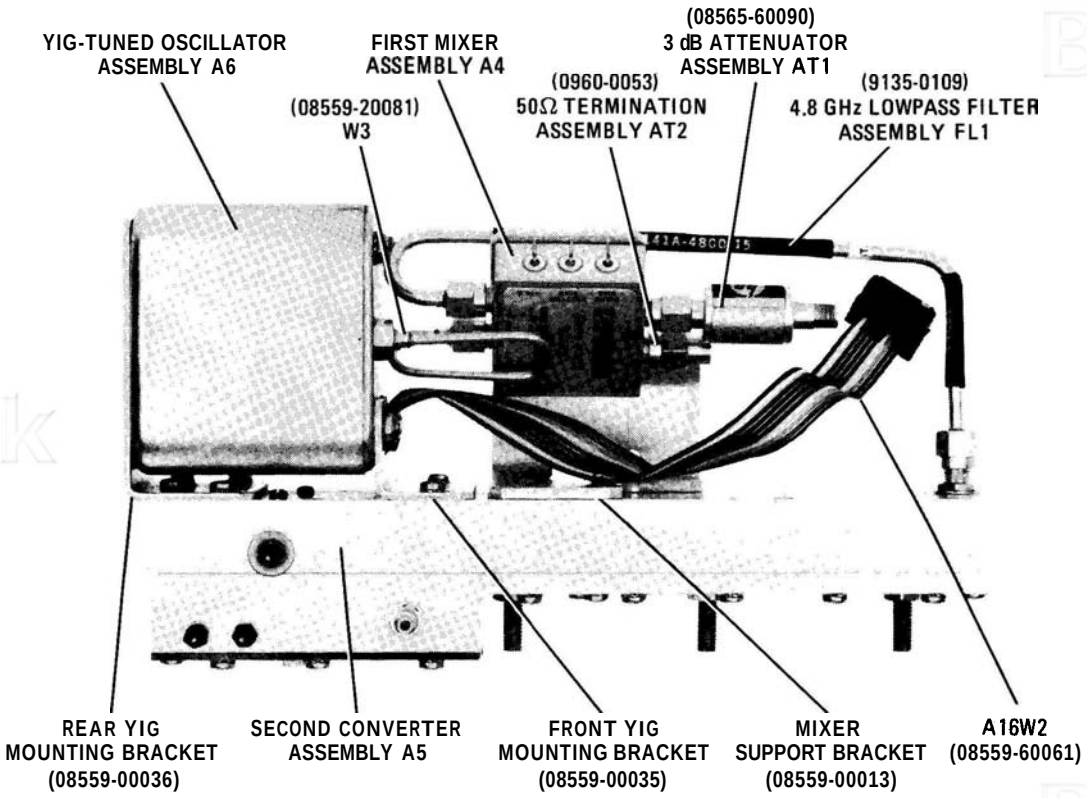

FIGURE 8-24. RF SECTION, COMPONENT LOCATIONS

A3, A4, A5, A6 RF SECTION

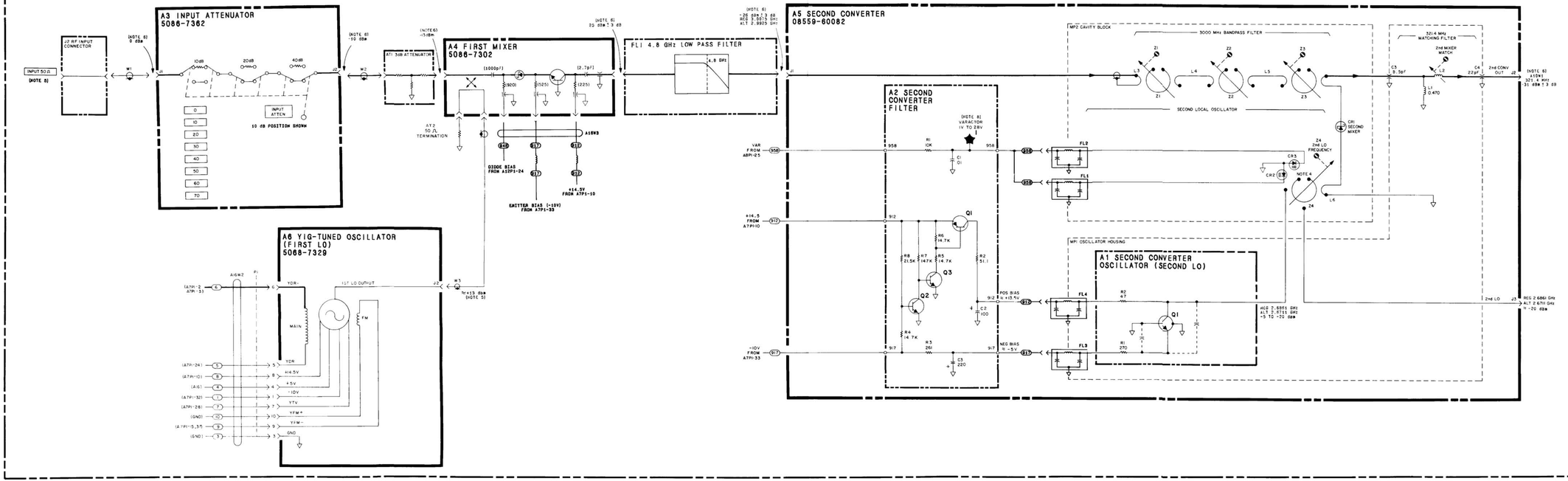

NOTES:

1. REFERENCE DESIGNATORS WITHIN THIS ASSEMBLY ARE ABBREVIATED, PREFIX ABBREVIATION WITH ASSEMBLY NUMBER FOR COMPLETE REFERENCE DESIGNATOR.
2. UNLESS OTHERWISE INDICATED: RESISTANCE IN OHMS (Ω) CAPACITANCE IN MICROFARADS (μF) INDUCTANCE IN MICROHENRIES (μH)
3. FL1 IS A LOW-PASS FILTER CONTAINED WITHIN A SEMI-RIGID COAX CABLE. DO NOT BEND!
4. CR2 AND CR3 ARE LOCATED INSIDE RESONANT CAVITY AND CHANGE THE ELECTRICAL SIZE OF THE CAVITY AS BIAS VOLTAGE TO THEM CHANGES THEIR CAPACITANCE. THIS EFFECTIVE CHANGE IN CAVITY SIZE CHANGES LO FREQUENCY.
5. LO POWER, WHEN MEASURED AT THE RF INPUT, IS TYPICALLY –8 dBm±3 dB. (SET THE INSTRUMENT SPAN TO ZERO, THE INPUT ATTEN TO 0.)
6. POWER LEVELS ARE MEASURED WITH 0 dBm AT THE RF INPUT. (SET THE INSTRUMENT SPAN TO ZERO, THE RESOLUTION BW TO 3 MHz, AND THE INPUT ATTEN TO 10 dB WHEN MAKING THESE MEASUREMENTS.)
7. MNEMONIC TABLE

MNEMONICS	DESCRIPTION
YTV	YIG TUNE VOLTAGE
YDR+ YDR–	YTO MAIN COIL SIGNAL
YFM+ YFM–	YTO FM COIL SIGNAL
VAR	VARACTOR BIAS

8. THE VOLTAGE AT THIS TEST POINT IS TYPICALLY GREATER WITH ALT IF OFF.

A3, A4, A5, A6

FIGURE 8-25. RF SECTION, SCHEMATIC DIAGRAM

8-65/8-66

FREQUENCY CONTROL ASSEMBLY A7, CIRCUIT DESCRIPTION

The Frequency Control Assembly A7 drives the YIG-Tuned Oscillator Assembly A6 and provides the regulated +14.5V and −10V supplies to the First Mixer Assembly A4, the Second Converter Assembly A5, and the Marker Assembly A8. Inputs to the Frequency Control Assembly A7 consist of the tuning voltage and the band information from the Front Switch Assembly A2, as well as the attenuated sweep from the Marker Assembly A8. The tuning voltage is routed to the Marker Assembly A8 while the sweep plus tune (S + T) voltage goes to the Step Gain Assembly A12 and Vertical Driver/Blanking Assembly A15. The YIG Tune Voltage (YTV) is applied to the biasing circuitry of the YIG-Tuned Oscillator Assembly A6.

Tune/Full Span Voltage (B)

Coarse and fine tune voltages from the front panel are summed and buffered by U12 and resistors R77, R78, and R79. This summed voltage is routed to the YTO Main Coil Tune Driver through Q13. It is also routed to the Marker Assembly A8 to be conditioned for the Digital Panel Meter Assembly A1. Resistors R64 and R65 divide the −10V supply to develop −5V at the noninverting input of U11, which buffers the voltage for use as the mid-band tune voltage required for full sweep operation.

With the selection of full sweep operation, P1-41 (FS9) goes to +15V and Q11 turns off. Without current flowing in R90, Q10 is off. This allows Q9 to turn on because Q10 no longer supplies the positive gate-source voltage that holds Q9 off. At the same time, Q12 turns on, shutting Q13 off. This routes the −5V supplied by U11 to the YTO Main Coil Tune Driver tuning the YTO to mid-band. When full band is not selected, P1-41 (FS9) is close to ground potential due to A8CR19, A8R91, and A8R92, on the Marker Assembly A8 (block B). This results in Q10 turning on, holding Q9 off. Transistor A12 is now turned off, removing the pinch-off voltage on Q13. The tune voltage from the front panel now adjusts the YTO center frequency.

YTO Main Coil Tune Driver (D)

Operational amplifier U10 and resistors R61, R62, R72, R76, R80, and R82 sum and offset the applied tuning and sweep voltages and convert them to the current required to tune the YTO. The current is set by the voltage across R48 and the 6 GHz adjustment R47. Shaping of the voltage-to-current function is necessary to maintain the linearity of the YTO sweep. This shaping is accomplished by using CRS, in conjunction with R59* and R60*, to establish two break points in the sweep ramp. MOSFET Q8 adds current drive capacity to the output of U10. Offset and buffering of the sweep plus tune voltage takes place in U9. It supplies the sweep plus tune voltage to the limit comparator on the Vertical Driver/Blanking Assembly A15 and to the first converter band tilt circuit on the Step Gain Assembly A12. Operational amplifier U9b supplies the YIG Tune Voltage (YTV) at 1V per GHz to the biasing circuitry of the YTO. This adjusts the YTO, controlling its harmonic output. Delay compensation for main coil sweeps is provided by C12* and R58.

FM/Main Coil Sweep Switch (A)

Quad switch U15 routes the attenuated sweep ramp to the YTO Main Coil Tune Driver or to the YTO FM Coil Driver while grounding the unused inputs. Transistor Q16 provides level shift for the switch drive and is controlled by the FREQ SPAN/DIV control.

YTO FM Coil Driver (G)

The YTO FM Coil Driver sweeps the YTO in spanwidths of 1 MHz per division and narrower. Operational amplifier U13 inverts the sweep voltage and drives the push-pull current driver comprising Q14 and Q15.

Resistor R92 is an adjustable current limiter that makes possible sweep width adjustment by changing the gain of the stage. Delay compensation for FM coil swept spans is provided by U14, C14, R96*, and potentiometer R83, the delay compensation adjustment.

YTO Main Coil Fixed Driver (F)

This driver supplies current to the YTO main coil to set the start frequency of the first LO (YIG-Tuned Oscillator Assembly A6) at approximately 3 GHz. Resistor R8 adjusts this frequency by changing the reference voltage at U3 and, therefore, the drive to Q5. MOSFET Q5 buffers the operational amplifier's output and supplies current drive to the YTO main coil.

Alternate IF Driver (YTO) (C)

A voltage divider, R18 and R19, form a nominal +5V source that supplies U7 and establishes pull-up voltages on the H2, H3, and PM lines. When alternate IF is selected, current to the YTO main coil changes, shifting the sweep-center frequencies by ±15 MHz/N, where N is the harmonic number associated with the selected band. Four-to-ten-line decoder U4 decodes front panel band information and activates the appropriate section of U1. This selects the resistor that is paralleled with R9 in the YTO Main Coil Fixed Driver. Altering the effective resistance of R9 changes the current drive to the YTO main coil by changing the gain of the YTO Main Coil Driver circuit.

YTO Main Coil Filter (E)

When FM coil spans (<1 MHz/div) are selected, A16Q1 connects A16C22 (both located on the motherboard) across the main coil of the YTO to filter noise and line related signals. During wide spans (>1 MHz/div), the charge on A16C22 is maintained by U5, Q1, Q3, and associated circuitry. Diodes CR3 and VR1 protect the filter from excessive back EMF (electromotive force) generated by the YTO.

Voltage Regulators (H) (I) (K)

Precision, temperature compensated, zener diode VR2 provides the reference for the voltage regulators. The output of the +14.5V supply is fed back through R39 to bias VR2, while VR3 ensures that VR2 initially turns on. Transistor Q4 is a series pass element driven by U6 and Q5, while R35, R40, and R41 sample the output voltage and provide adjustment.

The −12V supply tracks the +14.5V supply and consists of a pass element, Q7, driven by U8.

The −10V regulator supplies the voltage to the TUNING control, and is heavily filtered by C3 and R33. Transistor Q6 is the series pass element driven by U7 and resistor R29 adjusts the output voltage level.

FREQUENCY CONTROL ASSEMBLY A7, TROUBLESHOOTING

The Frequency Control Assembly A7 is the principal cause of excessive residual FM of the YIG-Tuned Oscillator's output. The following are a series of tests to help isolate the source of FM to a function block on the Frequency Control Assembly. Components most likely to be the source of the FM in each block are also listed. Be sure to check the following power supply voltages, for correct level and excessive ripple, before proceeding: the +14.5V Regulator (block H), the −10V Regulator (block I), the −12V Regulator (block K), and the +15V and −12.6V Power Supplies (block J).

RESIDUAL FM TROUBLESHOOTING FLOWCHART ANNOTATION

CAUTION

In the next steps, edge connector contacts on the circuit board are taped over to isolate portions of the circuit. After completing a step where taping is necessary, remove the tape and clean the circuit board edge contacts with an 80120 solution of isopropyl alcohol and water before continuing to the next step. Refer to PRINTED CIRCUIT BOARD EDGE CONNECTOR CONTACT CLEANING at the beginning of this section for a detailed description of the cleaning procedure. Care should also be taken whenever instructed to unsolder components during the test.

Set HP 8559A controls as follows:

FREQUENCY BAND GHz	.01 – 3
TUNING	.010 GHz
FREQ SPAN/DIV	0
RESOLUTIONBW	300 kHz
INPUTATTEN	0 dB
REFERENCE LEVEL	– 10 dB
REFLEVELFINE	0
Amplitude Scale	10 dB/DIV
SWEEP TIME/DIV	AUTO
SWEEP TRIGGER	SINGLE
VIDEOFILTER	OFF
BLCLIP	OFF
SIGIDENT	OFF
ALTIF	OFF

NOTE

Use the Residual FM Troubleshooting Flowchart to guide you through the test. Refer to this annotation as indicated by the steps in the flowchart.

a. To observe the first LO, connect a second spectrum analyzer to the HP 8559A RF input (a significant fraction of the first LO power is coupled to the RF input by the First Mixer Assembly A4). When measured in this manner, the first LO power should be – 8 dBm ± 3 dBm at about 3 GHz for the listed control settings. This setup is used to observe the first LO in all of the following tests.

b. Begin by isolating the YTO Main Coil Tune Driver from the remainder of the frequency control circuit. This is accomplished by taping over P1-3 on the circuit board edge-connector contacts.

c. If the residual FM is unchanged, assume that the YTO Main Coil Tune Driver and the circuits feeding it are not the source of FM. The next step is to isolate the YTO FM Coil Driver from the circuit by taping over PI-15 and P1-37.

d. If the residual FM is unchanged, assume that the YTO FM Coil Driver is not the source. Proceed by placing a short across C1. This isolates the YTO Main Coil Fixed Driver from the circuit. Since the YTO Main Coil Fixed Driver supplies the majority of the YTO operating current, the YTO will not operate when the YTO Main Coil Fixed Driver is isolated from the circuit. To compensate for this, it is necessary to increase the current supplied by the YTO Main Coil Tune Driver. Adjust the TUNING control of the HP 8559A under test for a frequency display of 3 GHz; this supplies enough current from the YTO Main Coil Tune Driver to allow the YTO to oscillate at about 3 GHz.

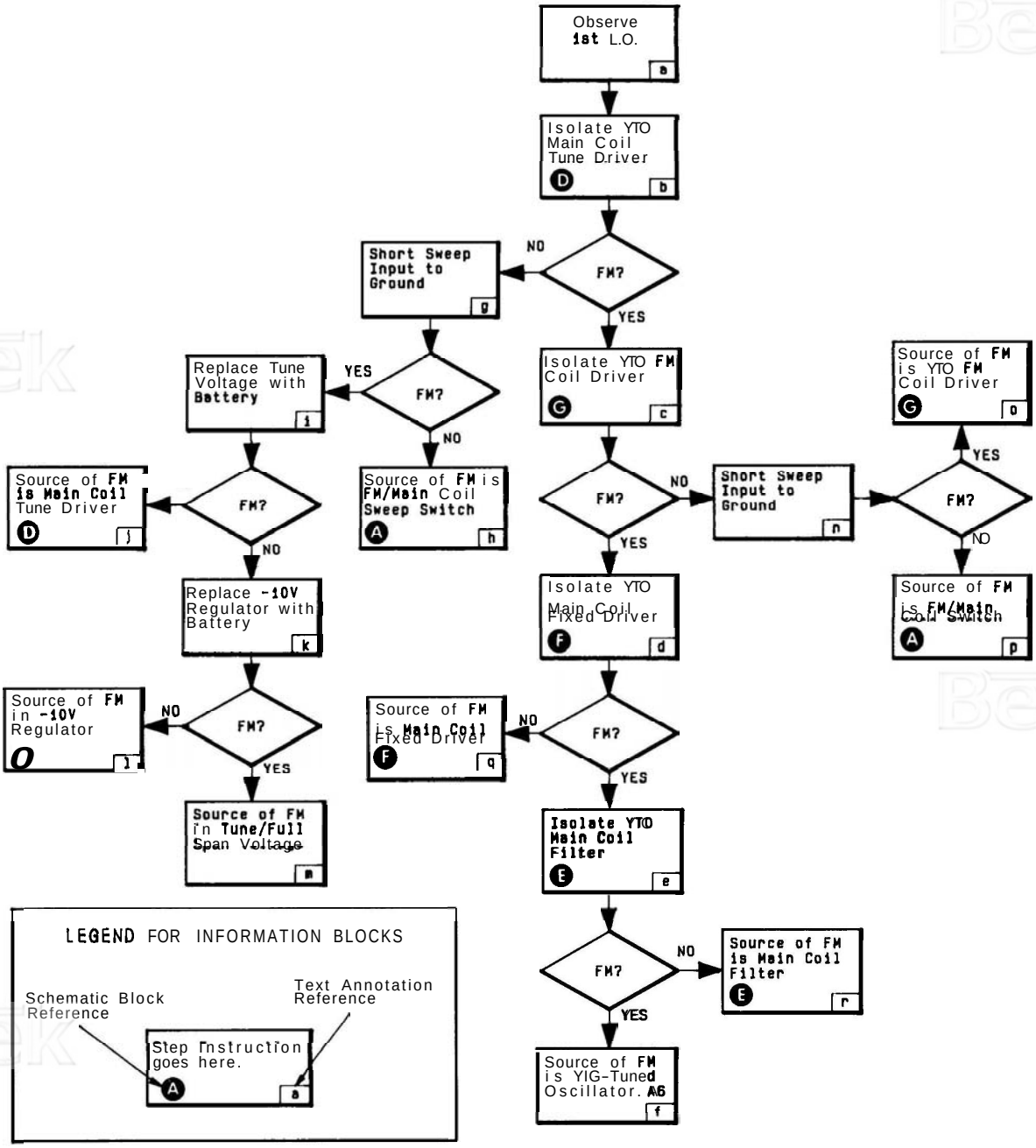

FIGURE 8-26. RESIDUAL FM TROUBLESHOOTING FLOWCHART

e. If the residual FM is unchanged, assume that the YTO Main Coil Fixed Driver is not its source. Retune the HP 8559A to minimum, .010 GHz. Isolate the YTO Main Coil Filter from the circuit by mounting the Frequency Control Assembly A7 on an extender board and taping over P1-19, P1-20, P1-25, while shorting P1-2 to P1-19.

f. If the residual FM is unchanged, the probable source is the YIG-Tuned Oscillator Assembly A6.

g. If isolating the YTO Main Coil Tune Driver from the frequency control circuit eliminates the residual FM, proceed to further isolate the source by shorting the sweep from block A to ground. This is best accomplished by shorting the input side of R80 to the ground side of R63. Use a short jumper to prevent the induction of line frequency noise into the circuit.

h. If the residual FM is eliminated, the source is probably the FM/Main Coil Sweep Switch. The most common failure is U15.

i. If residual FM is present after shorting the input sweep, remove the jumper and substitute a battery for the tune voltage. Do this by carefully unsoldering the input side of R82 and inserting a battery (5V to 10V) between the free end of R82 (the "–" terminal) and the grounded end of R63 (the "+" terminal). Use the shortest possible leads to prevent line frequency noise pickup.

j. If residual FM is unchanged, the probable source is the YTO Main Coil Tune Driver. The most common failures are: U10, R72, R76, R61, R80, R63, and R62, in that order.

k. In this step, the –10V regulator is replaced with a battery. Replace R82 and tape over P1-5. Attach the negative (–) battery lead to pin 3 of U12; attach the positive (+) lead to the grounded end of R63. If the residual FM is eliminated, the probable source is the Tune/Full Span Voltage (block B). If the residual FM is unchanged, remove the battery and the tape. Tune the FINE TUNE control to minimum, remover the (945) wire from the COARSE TUNE control (A2R1), and attach the battery's negative (–) lead to the COARSE TUNE control in place of the (945) wire. Attach the positive (+) battery lead to the ground side of R63. This test is necessary to eliminate the TUNING control as a source of residual FM.

l. If using the battery in place of the –10V regulator eliminates residual FM, the –10V regulator is the probable source. All of the regulator parts can cause instability; however, the most common failures are: U7, R30, R33, R32, C3, R29, and VR2 (block H), in that order. Also, verify that all supplies are properly adjusted.

m. If the Tune/Full Span Voltage (block B) is the probable source of the FM, the most common failures are U12 and Q13.

n. If isolating the YTO FM Coil Driver eliminates the residual FM, short the incoming sweep to ground. Install a jumper between the input side of R97 and the ground side of R95. Use the shortest possible lead to minimize line frequency noise pickup.

o. If the residual FM is unchanged, the source is probably the YTO FM Coil Driver. The most common failures are U13 and U14.

p. If the residual FM is eliminated, the source is probably the FM/Main Coil Sweep Switch. The most common failure is U15. If the residual FM is unchanged, short TP8 to ground. If this eliminates the residual FM, the source is probably on the Marker Assembly A8.

q. If isolating the YTO Main Coil Fixed Driver eliminates the residual FM, it is probably the source of the FM. The most common failures are: U2, C1, R1, and R2, in that order.

r. If removing the YTO Main Coil Filter from the circuit eliminates residual FM, it is probably the source of the FM. The most common failure is Q5. If the FM is not eliminated, the most common failures are A16Q1 and A16C22.

TABLE 8-4. FREQUENCY CONTROL ASSEMBLY A7, REPLACEABLE PARTS (1 OF 3)

Reference Designation	HP Part Number	CD	Qty	Description	Mfr Code	Mfr Part Number
A7	08559-60077	3	1	FREQUENCY CONTROL ASSEMBLY	28480	08559-60077
A7C1	0180-0100	3	1	CAPACITOR-FXD 4.7UF+-10% 35VDC TA	56289	150D475X9035B2
A7C2	0160-4084	8	2	CAPACITOR-FXD .1UF +-20% 50VDC CER	28480	0160-4084
A7C3	0180-2207	5	1	CAPACITOR-FXD 100UF+-10% 10VDC TA	56289	150D107X9010B2
A7C4	0180-0197	8	2	CAPACITOR-FXD 2.2UF+-10% 20VDC TA	56289	150D225X9020A2
A7C5	0160-4810	8	1	CAPACITOR-FXD 330PF +-5% 100VDC CER	28480	0160-4810
A7C6	0180-1746	5	3	CAPACITOR-FXD 15UF+-10% 20VDC TA	56289	150D156X9020B2
A7C7	0160-3457	7	1	CAPACITOR-FXD 2000PF +-10% 250VDC CER	28480	0160-3457
A7C8	0160-3661	5	1	CAPACITOR-FXD .1UF +-5% 50VDC MET-POLYC	28480	0160-3661
A7C9	0180-0197	8		CAPACITOR-FXD 2.2UF+-10% 20VDC TA	56289	150D225X9020A2
A7C10	0180-1746	5		CAPACITOR-FXD 15UF+-10% 20VDC TA	56289	150D156X9020B2
A7C11	0180-1746	5		CAPACITOR-FXD 15UF+-10% 20VDC TA	56289	150D156X9020B2
A7C12*	0180-3291	3	1	CAPACITOR-FXD 1UF+-10% 35VDC TA	56289	150D105X9035A2
A7C13	0160-4812	0	1	CAPACITOR-FXD 220PF +-5% 100VDC CER	28480	0160-4812
A7C14	0160-4084	8		CAPACITOR-FXD .1UF +-20% 50VDC CER	28480	0160-4084
A7CR1	1901-0518	8	2	DIODE-SM SIG SCHOTTKY	28480	1901-0518
A7CR2	1901-0518	8		DIODE-SM SIG SCHOTTKY	28480	1901-0518
A7CR3	1901-0050	3	7	DIODE-SWITCHING 80V 200MA 2NS DO-35	28480	1901-0050
A7CR4	1901-0050	3		DIODE-SWITCHING 80V 200MA 2NS DO-35	28480	1901-0050
A7CR5	1901-0050	3		DIODE-SWITCHING 80V 200MA 2NS DO-35	28480	1901-0050
A7CR6	1901-0050	3		DIODE-SWITCHING 80V 200MA 2NS DO-35	28480	1901-0050
A7CR7	1901-0050	3		DIODE-SWITCHING 80V 200MA 2NS DO-35	28480	1901-0050
A7CR8	1901-0050	3		DIODE-SWITCHING 80V 200MA 2NS DO-35	28480	1901-0050
A7CR9	1901-0040	1	2	DIODE-SWITCHING 30V 50MA 2NS DO-35	28480	1901-0040
A7CR10	1901-0040	1		DIODE-SWITCHING 30V 50MA 2NS DO-35	28480	1901-0040
A7CR11	1901-0050	3		DIODE-SWITCHING 80V 200MA 2NS DO-35	28480	1901-0050
A7J1	1251-4700	9	1	CONNECTOR 3-PIN M POST TYPE	28480	1251-4700
A7Q1	1855-0420	2	1	TRANSISTOR J-FET 2N4391 N-CHAN D-MODE	01295	2N4391
A7Q2	1855-0251	7	2	TRANSISTOR MOSFET N-CHAN E-MODE TO-39 SI	28480	1855-0251
A7Q3	1855-0278	8	1	TRANSISTOR J-FET 2N5116 P-CHAN D-MODE	17856	2N5116
A7Q4	1853-0213	7	1	TRANSISTOR PNP 2N4236 SI TO-5 PD=1W	04713	2N4236
A7Q5	1854-0404	0	2	TRANSISTOR NPN SI TO-18 PD=360MW	28480	1854-0404
A7Q6	1854-0637	1	3	TRANSISTOR NPN 2N2219A SI TO-5 PD=800MW	01295	2N2219A
A7Q7	1854-0637	1		TRANSISTOR NPN 2N2219A SI TO-5 PD=800MW	01295	2N2219A
A7Q8	1855-0251	7		TRANSISTOR MOSFET N-CHAN E-MODE TO-39 SI	28480	1855-0251
A7Q9	1855-0421	3	2	TRANSISTOR J-FET 2N5114 P-CHAN D-MODE	17856	2N5114
A7Q10	1853-0281	9	3	TRANSISTOR PNP 2N2907A SI TO-18 PD=400MW	04713	2N2907A
A7Q11	1853-0281	9		TRANSISTOR PNP 2N2907A SI TO-18 PD=400MW	04713	2N2907A
A7Q12	1853-0281	9		TRANSISTOR PNP 2N2907A SI TO-18 PD=400MW	04713	2N2907A
A7Q13	1855-0421	3		TRANSISTOR J-FET 2N5114 P-CHAN D-MODE	17856	2N5114
A7Q14	1853-0314	9	1	TRANSISTOR PNP 2N2905A SI TO-39 PD=600MW	04713	2N2905A
A7Q15	1854-0637	1		TRANSISTOR NPN 2N2219A SI TO-5 PD=800MW	01295	2N2219A
A7Q16	1854-0404	0		TRANSISTOR NPN SI TO-18 PD=360MW	28480	1854-0404
A7R1	0699-0304	8	1	RESISTOR 8K .025% .1W F TC=0+-5	28480	0699-0304
A7R2	0699-0900	0	1	RESISTOR 12.4K .1% .1W F TC=0+-10	28480	0699-0900
A7R4	0698-6358	2	1	RESISTOR 100K .1% .125W F TC=0+-25	28480	0698-6358
A7R5	0757-0458	7	1	RESISTOR 51.1K 1% .125W F TC=0+-100	24546	C4-1/8-T0-5112-F
A7R6	0757-0464	5	1	RESISTOR 90.9K 1% .125W F TC=0+-100	24546	C4-1/8-T0-9092-F
A7R7	0698-6362	8	2	RESISTOR 1K .1% .125W F TC=0+-25	28480	0698-6362
A7R8	2100-4020	8	1	RESISTOR-TRMR 2K 10% MF SIDE-ADJ 26-TRN	28480	2100-4020
A7R9	0811-3581	9	1	RESISTOR 55 1% 12W PW TC=0+-2	28480	0811-3581
A7R10	0698-3458	9		RESISTOR 42.2K 1% .125W F TC=0+-100	24546	C4-1/8-T0-4222-F
A7R11	0757-0442	9	12	RESISTOR 10K 1% .125W F TC=0+-100	24546	C4-1/8-T0-1002-F
A7R12	0757-0465	6		RESISTOR 100K 1% .125W F TC=0+-100	24546	C4-1/8-T0-1003-F
A7R13	0757-0465	6		RESISTOR 100K 1% .125W F TC=0+-100	24546	C4-1/8-T0-1003-F
A7R14	0757-0465	6		RESISTOR 100K 1% .125W F TC=0+-100	24546	C4-1/8-T0-1003-F
A7R15	0757-0465	6		RESISTOR 100K 1% .125W F TC=0+-100	24546	C4-1/8-T0-1003-F
A7R16	0757-0465	6		RESISTOR 100K 1% .125W F TC=0+-100	24546	C4-1/8-T0-1003-F
A7R17	0757-0465	6		RESISTOR 100K 1% .125W F TC=0+-100	24546	C4-1/8-T0-1003-F
A7R18	0698-3153	9	1	RESISTOR 3.83K 1% .125W F TC=0+-100	24546	C4-1/8-T0-3831-F
A7R19	0757-0440	7	1	RESISTOR 7.5K 1% .125W F TC=0+-100	24546	C4-1/8-T0-7501-F
A7R20	0757-0465	6		RESISTOR 100K 1% .125W F TC=0+-100	24546	C4-1/8-T0-1003-F
A7R21	0698-6320	8	1	RESISTOR 5K .1% .125W F TC=0+-25	03888	PME55-1/8-T9-5001-B
A7R22	0698-8861	6	1	RESISTOR 6.66K .1% .125W F TC=0+-25	28480	0698-8861
A7R23	0698-6614	3	1	RESISTOR 7.5K .1% .125W F TC=0+-25	28480	0698-6614
A7R24	0698-6360	6	2	RESISTOR 10K .1% .125W F TC=0+-25	28480	0698-6360
A7R25	0698-6619	8	1	RESISTOR 15K .1% .125W F TC=0+-25	28480	0698-6619
A7R26	0698-6630	3	1	RESISTOR 20K .1% .125W F TC=0+-25	28480	0698-6630
A7R27	0757-0465	6		RESISTOR 100K 1% .125W F TC=0+-100	24546	C4-1/8-T0-1003-F
A7R28	0757-0465	6		RESISTOR 100K 1% .125W F TC=0+-100	24546	C4-1/8-T0-1003-F
A7R29	2100-2851	9	2	RESISTOR-TRMR 2K 10% WW SIDE-ADJ 20 TRN	32660	3813P-202
A7R30	0699-0901	1	1	RESISTOR 33.5K .1% .1W F TC=0+-10	28480	0699-0901
A7R31	0757-0382	6	2	RESISTOR 16.2 1% .125W F TC=0+-100	19701	MF4C1/8-T0-16R2-F

TABLE 8-4. FREQUENCY CONTROL ASSEMBLY A7, REPLACEABLE PARTS (2 OF 3)

Reference Designation	HP Part Number	CD	Qty	Description	Mfr Code	Mfr Part Number
A7R32	0699-3903	3	6	RESISTOR 10K .1% .1W F TC=0+-10	28480	0699-3903
A7R33	0699-0903	3		RESISTOR 10K .1% .1W F TC=0+-10	28480	0699-0903
A7R34	0757-0418	9	1	RESISTOR 619 1% .125W F TC=0+-100	24546	C4-1/8-T0-619R-F
A7R35	0811-1175	3	1	RESISTOR 4.22K 1% .125W PWW TC=0+-10	07088	KP61-4221-1
A7R36	0698-0083	8	1	RESISTOR 1.96K 1% .125W F TC=0+-100	24546	C4-1/8-T0-1961-F
A7R37	0757-0438	3	2	RESISTOR 5.11K 1% .125W F TC=0+-100	24546	C4-1/8-T0-5111-F
A7R38	0757-0428	1	1	RESISTOR 1.62K 1% .125W F TC=0+-100	24546	C4-1/8-T0-1621-F
A7R39	0757-0424	7	1	RESISTOR 1.1K 1% .125W F TC=0+-100	24546	C4-1/8-T0-1101-F
A7R40	0811-3953	0	1	RESISTOR 3.16K 1% .125W PWW TC=0+-10	28949	114-1/8 D-3161-F
A7R41	2100-3123	0	1	RESISTOR-TRMR 500 10% C SIDE-ADJ 17-TRN	02111	43P501
A7R42	0698-6362	8		RESISTOR 1K .1% .125W F TC=0+-25	28480	0698-6362
A7R43	0698-6360	6		RESISTOR 10K .1% .125W F TC=0+-25	28480	0698-6360
A7R44	0757-0444	1	1	RESISTOR 12.1K 1% .125W F TC=0+-100	24546	C4-1/8-T0-1212-F
A7R45	0757-0442	9		RESISTOR 10K 1% .125W F TC=0+-100	24546	C4-1/8-T0-1002-F
A7R46	0757-0382	6		RESISTOR 16.2 1% .125W F TC=0+-100	19701	MF4C1/8-T0-16R2-F
A7R47	2100-1753	8	1	RESISTOR-TRMR 20 5% WW SIDE-ADJ 1-TRN	28480	2100-1753
A7R48	0811-3492	1	1	RESISTOR 133 1% 12W PW TC=0+-2	28480	0811-3492
A7R49	0757-0280	3	2	RESISTOR 1K 1% .125W F TC=0+-100	24546	C4-1/8-T0-1001-F
A7R50	0757-0442	9		RESISTOR 10K 1% .125W F TC=0+-100	24546	C4-1/8-T0-1002-F
A7R51	0698-3136	8	1	RESISTOR 17.8K 1% .125W F TC=0+-100	24546	C4-1/8-T0-1782-F
A7R52	0757-0317	7	1	RESISTOR 1.33K 1% .125W F TC=0+-100	24546	C4-1/8-T0-1331-F
A7R53	0698-3160	8	2	RESISTOR 31.6K 1% .125W F TC=0+-100	24546	C4-1/8-T0-3162-F
A7R54	0757-0442	9		RESISTOR 10K 1% .125W F TC=0+-100	24546	C4-1/8-T0-1002-F
A7R55	0698-0085	0	2	RESISTOR 2.61K 1% .125W F TC=0+-100	24546	C4-1/8-T0-2611-F
A7R56	0757-0421	4	1	RESISTOR 825 1% .125W F TC=0+-100	24546	C4-1/8-T0-825R-F
A7R57	0757-0442	9		RESISTOR 10K 1% .125W F TC=0+-100	24546	C4-1/8-T0-1002-F
A7R58	0757-0279	0	1	RESISTOR 3.16K 1% .125W F TC=0+-100	24546	C4-1/8-T0-3161-F
A7R59*	0757-0459	8	1	RESISTOR 56.2K 1% .125W F TC=0+-100	24546	C4-1/8-T0-5622-F
A7R60*	0698-3454	3	1	RESISTOR 215K 1% .125W F TC=0+-100	24546	C4-1/8-T0-2153-F
A7R61	0699-0903	3		RESISTOR 10K .1% .1W F TC=0+-10	28480	0699-0903
A7R62	0698-3456	5	2	RESISTOR 287K 1% .125W F TC=0+-100	24546	C4-1/8-T0-2873-F
A7R63	0698-3456	5		RESISTOR 287K 1% .125W F TC=0+-100	24546	C4-1/8-TC-2873-F
A7R64	0757-0442	9		RESISTOR 10K 1% .125W F TC=0+-100	24546	C4-1/8-T0-1002-F
A7R65	0757-0442	9		RESISTOR 10K 1% .125W F TC=0+-100	24546	C4-1/8-TC-1002-F
A7R66	0757-0442	9		RESISTOR 10K 1% .125W F TC=0+-100	24546	C4-1/8-T0-1002-F
A7R67	0698-3156	2	1	RESISTOR 14.7K 1% .125W F TC=0+-100	24546	C4-1/8-T0-1472-F
A7R68	0698-3450	9		RESISTOR 42.2K 1% .125W F TC=0+-100	24546	C4-1/8-T0-4222-F
A7R69	0757-0442	9		RESISTOR 10K 1% .125W F TC=0+-100	24546	C4-1/8-T0-1002-F
A7R70	0698-0085	0		RESISTOR 2.61K 1% .125W F TC=0+-100	24546	C4-1/8-T0-2611-F
A7R71	0698-3442	9	2	RESISTOR 237 1% .125W F TC=0+-100	24546	C4-1/8-T0-237R-F
A7R72	0699-0903	3		RESISTOR 10K .1% .1W F TC=0+-10	28480	0699-0903
A7R73	0757-0442	9		RESISTOR 10K 1% .125W F TC=0+-100	24546	C4-1/8-TC-1002-F
A7R74	0757-0442	9		RESISTOR 10K 1% .125W F TC=0+-100	24546	C4-1/8-T0-1002-F
A7R75	2100-2851	9		RESISTOR-TRMR 2K 10% WW SIDE-ADJ 26-TRN	02660	3810P-202
A7R76	0699-0903	3		RESISTOR 10K .1% .1W F TC=0+-10	28480	0699-0903
A7R77	0698-3260	9	4	RESISTOR 464K 1% .125W F TC=0+-100	28480	0698-3260
A7R78	0698-3160	8		RESISTOR 31.6K 1% .125W F TC=0+-100	24546	C4-1/8-T0-3162-F
A7R79	0757-0280	3		RESISTOR 1K 1% .125W F TC=0+-100	24546	C4-1/8-T0-1001-F
A7R80	0699-0903	3		RESISTOR 10K .1% .1W F TC=0+-10	28480	0699-0903
A7R81	2100-3053	5	1	RESISTOR-TRMR 20 20% C SIDE-ADJ 17-TRN	02111	43P200
A7R82	0698-3442	9		RESISTOR 237 1% .125W F TC=0+-100	24546	C4-1/8-T0-237R-F
A7R83	2100-3054	6	1	RESISTOR-TRMR 50K 10% C SIDE-ADJ 17-TRN	02111	43P503
A7R84	0757-0465	6		RESISTOR 100K 1% .125W F TC=0+-100	24546	C4-1/8-T0-1003-F
A7R85	0757-0465	6		RESISTOR 100K 1% .125W F TC=0+-100	24546	C4-1/8-T0-1003-F
A7R86	0698-3260	9		RESISTOR 464K 1% .125W F TC=0+-100	28480	0698-3260
A7R87	0757-0465	6		RESISTOR 100K 1% .125W F TC=0+-100	24546	C4-1/8-T0-1003-F
A7R88	0698-3260	9		RESISTOR 464K 1% .125W F TC=0+-100	28480	0698-3260
A7R89	0757-0438	3		RESISTOR 5.11K 1% .125W F TC=0+-100	24546	C4-1/8-T0-5111-F
A7R90	0757-0465	6		RESISTOR 100K 1% .125W F TC=0+-100	24546	C4-1/8-T0-1003-F
A7R91	0698-3260	9		RESISTOR 464K 1% .125W F TC=0+-100	28480	0698-3260
A7R92	2100-1756	1	1	RESISTOR-TRMR 200 5% WW SIDE-ADJ 1-TRN	28480	2100-1756
A7R93	0698-3622	7	1	RESISTOR 120 5% 2W MO TC=0+-200	28480	0698-3622
A7R94	0698-7212	9	1	RESISTOR 100 1% .05W F TC=0+-100	24546	C3-1/8-T0-100R-F
A7R95	0757-0290	5	4	RESISTOR 6.19K 1% .125W F TC=0+-100	19701	MF4C1/8-T0-6191-F
A7R96*	0757-0462	3	1	RESISTOR 75K 1% .125W F TC=0+-100	24546	C4-1/8-T0-7502-F
A7R97	0757-0290	5		RESISTOR 6.19K 1% .125W F TC=0+-100	19701	MF4C1/8-T0-6191-F
A7R98	0757-0401	0	1	RESISTOR 100 1% .125W F TC=0+-100	24546	C4-1/8-T0-101-F
A7R99	0757-0290	5		RESISTOR 6.19K 1% .125W F TC=0+-100	19701	MF4C1/8-T0-6191-F
A7R100	0757-0290	5		RESISTOR 6.19K 1% .125W F TC=0+-100	19701	MF4C1/8-T0-6191-F
A7R101	0757-0465	6		RESISTOR 100K 1% .125W F TC=0+-100	24546	C4-1/8-T0-1003-F
A7R102	0698-3428	1	2	RESISTOR 14.7 1% .125W F TC=0+-100	03888	PME55-1/8-T0-14R7-F
A7R103	0698-3428	1		RESISTOR 14.7 1% .125W F TC=0+-100	03888	PME55-1/8-T0-14R7-F
A7R104	0757-0442	9		RESISTOR 10K 1% .125W F TC=0+-100	24546	C4-1/8-T0-1002-F
A7R105	0698-3157	3	1	RESISTOR 19.6K 1% .125W F TC=0+-100	24546	C4-1/8-T0-1962-F
A7R106*	0698-3450	9	3	RESISTOR 42.2K 1% .125W F TC=0+-100	24546	C4-1/8-T0-4222-F

TABLE 8-4. FREQUENCY CONTROL ASSEMBLY A7, REPLACEABLE PARTS (3 OF 3)

Reference Designation	HP Part Number	CD	Qty	Description	Mfr Code	Mfr Part Number
A7R107*	0757-0465	6	15	RESISTOR 133K 1% .125W F TC=0+-100	24546	C4-1/8-T0-1003-F
A7TP1	1251-0600	0	12	CONNECTOR-SGL CONT PIN 1.14-MM BSC-SZ SQ	28480	1251-0600
A7TP2	1251-0600	0		CONNECTOR-SGL CONT PIN 1.14-MM BSC-SZ SQ	28480	1251-0600
A7TP3	1251-0600	0		CONNECTOR-SGL CONT PIN 1.14-MM BSC-SZ SQ	28480	1251-0600
A7TP4	1251-0600	0		CONNECTOR-SGL CONT PIN 1.14-MM BSC-SZ SQ	28480	1251-0600
A7TP5	1251-0600	0		CONNECTOR-SGL CONT PIN 1.14-MM BSC-SZ SQ	28480	1251-0600
A7TP6	1251-0600	0		CONNECTOR-SGL CONT PIN 1.14-MM BSC-SZ SQ	28480	1251-0600
A7TP7	1251-0600	0		CONNECTOR-SGL CONT PIN 1.14-MM-BSC-SZ SQ	28480	1251-0600
A7TP8	1251-0600	0		CONNECTOR-SGL CONT PIN 1.14-MM BSC-SZ SQ	28480	1251-0600
A7TP9	1251-0600	0		CONNECTOR-SGL CONT PIN 1.14-MM-BSC-SZ SQ	28480	1251-0600
A7TP10	1251-0600	0		CONNECTOR-SGL CONT PIN 1.14-MM-BSC-SZ SQ	28480	1251-0600
A7TP11	1251-0600	0		CONNECTOR-SGL CONT PIN 1.14-MM-BSC-SZ SQ	28480	1251-0600
A7TP12	1251-0600	0		CONNECTOR-SGL CONT PIN 1.14-MM-BSC-SZ SQ	28480	1251-0600
A7U1	1858-0023	7	1	TRANSISTOR ARRAY 16-PIN PLSTC DIP	3L585	CA3081E
A7U2	5180-2314	0	4	IC OSC MIOPAMP	28480	5180-2314
A7U3	1810-0355	8	1	NETWORK-RES 10-SIP47.0K OHM X 5	01121	210B473
A7U4	1820-1526	8	1	IC DCDR CMOS DCD 10 DEC 4-TO-10-LINE	04713	MC14028BCL
A7U5	1826-0458	5	1	IC OP AMP TO-99 PKG	27014	LF255H
A7U6	1826-0703	9	1	IC OP AMP LOW-NOISE 8 DIP-C PKG	52363	XR5534ACN
A7U7	5180-2314	0		IC OSC MIOPAMP	28480	5180-2314
A7U8	1826-0132	6	3	IC OP AMP LOW BIAS-H-IMPD TO 99 PKG	27014	LM312H
A7U9	1826-0092	3	1	IC OP AMP GP DUAL TO-99 PKG	28480	1826-0092
A7U10	5180-2314	0		IC OSC MIOPAMP	28480	5180-2314
A7U11	1826-0102	6		IC OP AMP LOW-BIAS-H-IMPD TO-99 PKG	27014	LM312H
A7U12	5180-2314	0		IC OSC MIOPAMP	28480	5180-2314
A7U13	1826-0371	1	1	IC OP AMP LOW-BIAS-H-IMPD TO-99 PKG	27014	LF256H
A7U14	1826-0102	6		IC OP AMP LOW-BIAS-H-IMPD TO-99 PKG	27014	LM312H
A7U15	1826-0417	6	1	IC SWITCH ANLG QUAD 16-DIP-C PKG	27014	LF13333D
A7VR1	1902-0579	3	1	DIODE-ZNR 5.1V 5% PD=1W IR=10UA	28480	1902-0579
A7VR2	1902-0625	8	1	DIODE-ZNR 1N829 6.2V 5% DO-7 PD=.25W	04713	1N829
A7VR3	1902-3193	3	1	DIODE ZNR 13.3V 5% DO-35 PD=.4W	28480	1902-3193
				A7 MISCELLANEOUS PARTS		
	0520-0128	7	4	SCREW-MACH 2-56 .25 IN LG PAN HD POZI	28480	0520-0128
	0610-0001	6	4	NUT-HEX-DBL-CHAM 2-56 THD .062 IN-THK	28480	0610-0001
	1200-0173	5	3	INSULATOR-XSTR DAP-GL	28480	1200-0173
	1205-0095	0	3	HEAT SINK SGL TO-5/TO-39 CS	30161	32250
	2190-0014	1	4	WASHER-LK INTL T NO. 2 .089-IN-ID	28480	2190-0014
	2200-0107	6	1	SCREW MACH 4 40 .375-IN LG PAN HD POZI	28480	2200-0107

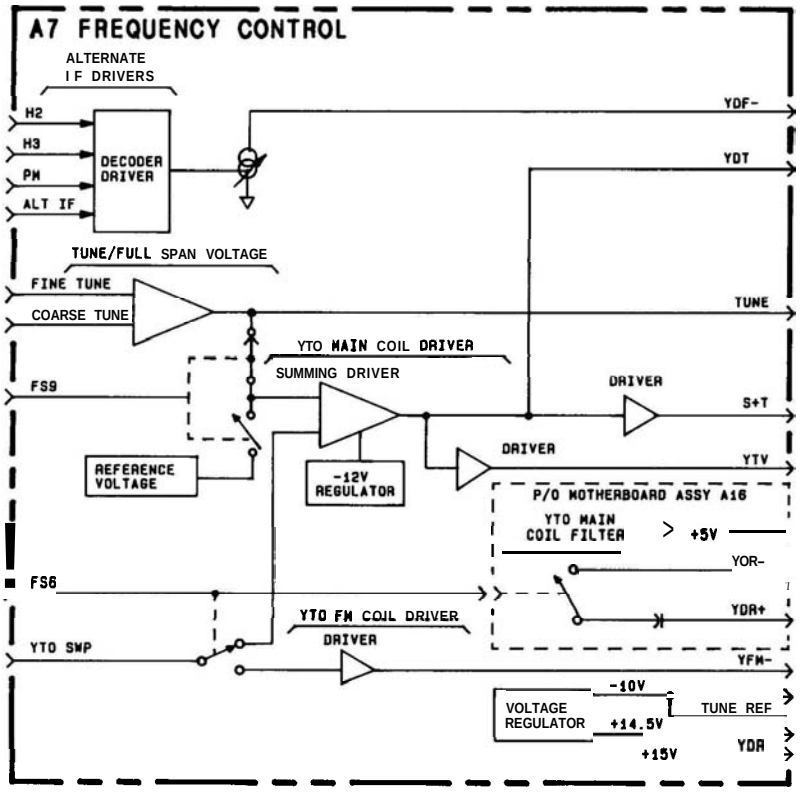

FIGURE 827. FREQUENCY CONTROL ASSEMBLY A7, BLOCK DIAGRAM

A7
FREQUENCY CONTROL ASSEMBLY

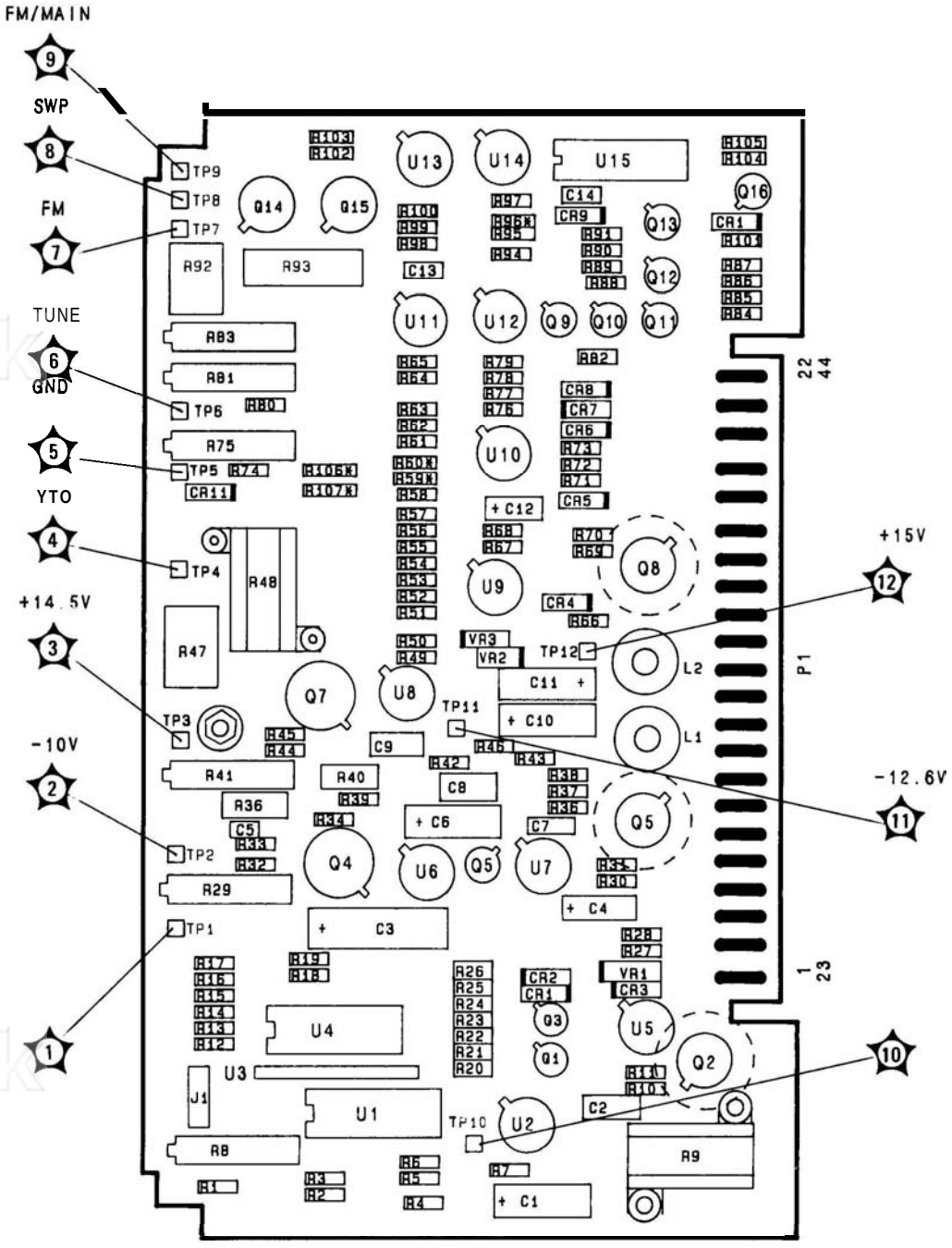

FIGURE 8-28. FREQUENCY CONTROL ASSEMBLY A7, COMPONENT LOCATIONS

A7 FREQUENCY CONTROL ASSEMBLY
08559-60077 (1 OF 2)

P1

PIN	SIGNAL	TO/FROM	FUNCTION BLOCK
1 23	GND S+T	A16 A12 A15	J H
2 24	YDR- YDR+	A6 A8	I J
3 25	YDR- YC+	A6 A16	J E
4 26	FINE TUNE	R2 (FINE)	B
5 27	C TUNE H3	R1 (COARSE)	H C
6 28	-10V YTV	R1 (COARSE) A6	I C
7 29	GND	A16	J
8 30	H2 YTO SWP	A2 A8	C A
9 31	GND 1	A16	J
10 32	+14.5V -10V	A6, A8, A9 A6, A8	H I
11 33	GND -10V	A16 A4, A5	J E
12 34	-12.6V	REAR PANEL P1 28	J
13 35	+15V	REAR PANEL P1 29	J
14 36	GND	A16	J
15 37	YFM-	A6	G
16 38	NC NC		
17 39	NC TUNE	A8	B
18 40	NC PM	A2	C
19 41	FM FILTER FS9	A16C22 A2	E B
20 42	FM FILTER NC	A16	E
21 43	NC ALT IF	A2	C
22 44	GND FS6	A16 A2	J A

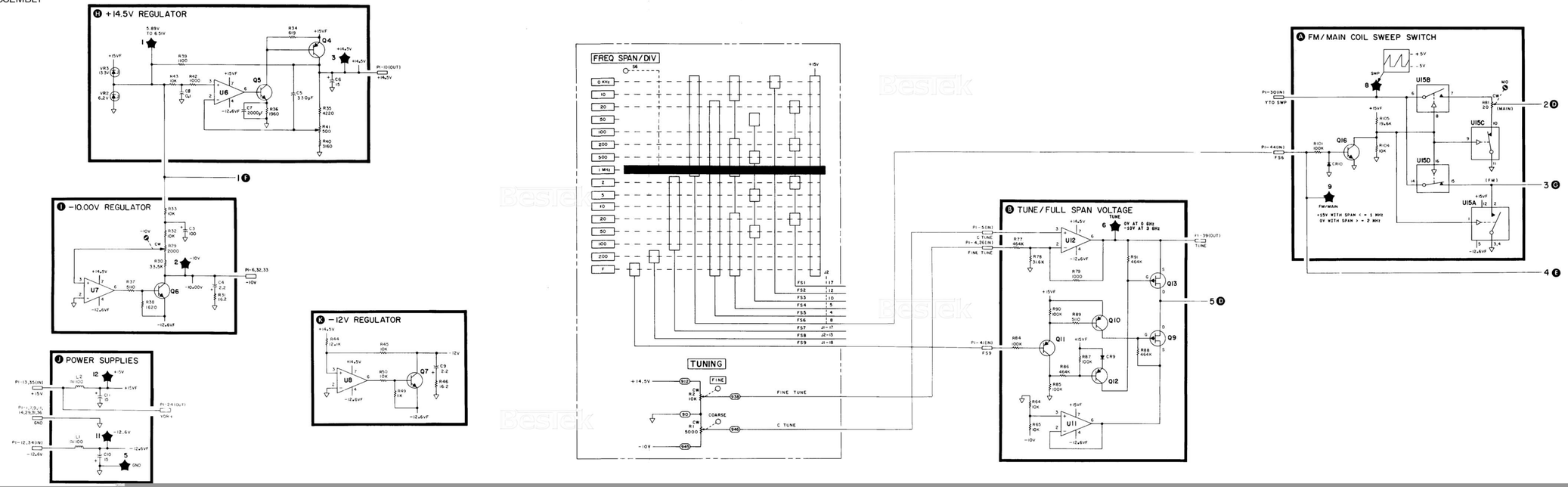

A7 FREQUENCY CONTROL ASSEMBLY 08559-60077 (2 OF 2)

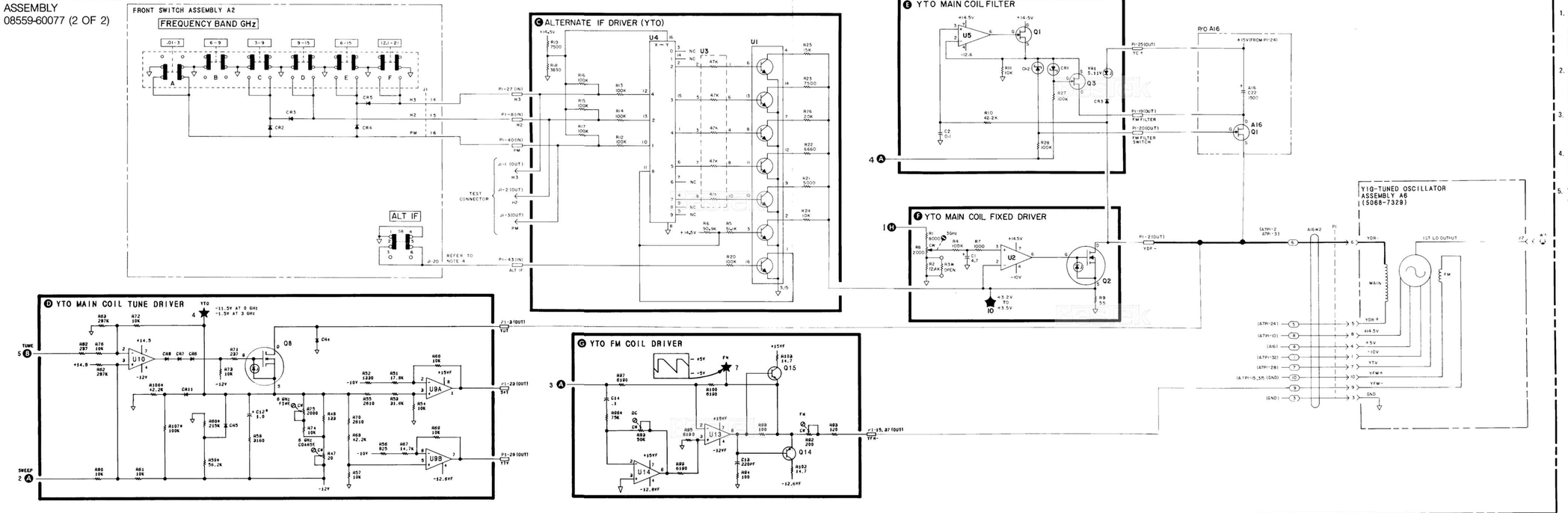

NOTES:

1. REFERENCE DESIGNATORS WITHIN THIS ASSEMBLY ARE ABBREVIATED, PREFIX ABBREVIATION WITH ASSEMBLY NUMBER FOR COMPLETE REFERENCE DESIGNATOR.
2. UNLESS OTHERWISE INDICATED:
   RESISTANCE IN OHMS (Ω)
   CAPACITANCE IN MICROFARADS (μF)
   INDUCTANCE IN MICROHENRIES (μH)
3. * INDICATES FACTORY SELECTED COMPONENT. VALUE SHOWN IS TYPICAL.
4. THE PULL-UP RESISTOR FOR ALT IF LINE IS LOCATED ON MARKER ASSEMBLY A8.
5. TRANSISTOR PIN CONFIGURATIONS (BOTTOM VIEW):

5. MNEMONIC TABLE

MNEMONIC	DEFINITION
ALT IF	ALTERNATE IF (LOW= ALT IF=3.0025 GHz)
ATTEN SWP	ATTENUATED SWEEP VOLTAGE
C TUNE	COARSE FREQUENCY TUNE
FINE TUNE	FINE FREQUENCY TUNE
FS6	SELECTS YTO FM OR MAIN COIL (+15V=FM COIL)
FS9	SELECTS FULL SPAN OR PER DIVISION. (+15V=FULL SPAN)
H2	SECOND HARMONIC BAND (LOW=TRUE)
H3	THIRD HARMONIC BAND (LOW=TRUE)
PM	SELECTS PLUS OR MINUS HARMONIC CONVERSION
S+T	SWEEP+TUNE VOLTAGE
TUNE	FREQUENCY TUNE VOLTAGE
YC+	YTO MAIN COIL FILTER
YDR+ / YDR−	YTO MAIN COIL SIGNAL
YFM+ / YFM−	YTO FM COIL SIGNAL
YTO SWP	YTO SWEEP VOLTAGE
YDF−	YIG MAIN COIL FIXED DRIVER
YDT−	YIG MAIN COIL TUNE DRIVER
YTV	YIG TUNE VOLTAGE

MARKER ASSEMBLY A8, CIRCUIT DESCRIPTION

The Marker Assembly A8 comprises the Marker Generator, the DPM and Second LO Drivers, the ALT IF and SIG IDENT circuits, the Auto Scan Time Drivers, and the Scan Attenuators.

Marker Generator (F)

The Marker Generator is basically a zero voltage detector. The four summed resistor voltages at pin 5 of U14 equal 0V only when the sweep voltage and the tune voltage correspond to the same frequency. The marker is then displayed at that frequency. If the input of U14b (pin 5) is at 0V, the outputs (pins 7 and 1) should be at 0V. The anodes of CR7 and CR10 should therefore be at 0V also. Resistor R45 pulls their cathodes down to about −0.5V. This turns on U6c, which normally has its emitter held to about +0.7V (+1.2V in fullband). As the emitter voltage of U6c increases, it turns on Q1. This pulls the video shift line down, shifting the signal and noise at the Log Amplifier Assembly A14 about one division toward the bottom of the screen. The output of the Log Amplifier Assembly A14 is permitted to be pulled low by the log shift resistor (A14R119) at its output.

DPM Driver (D)

The DPM Driver is an inverting operational amplifier circuit. The appropriate combination of input, offset, and feedback resistors is selected by U5 for the chosen frequency band (see Figure 8-30). Input control lines H2, H3, and PM carry the encoded band information. A truth table on the schematic, Figure 8-33, shows the levels of these lines during each band.

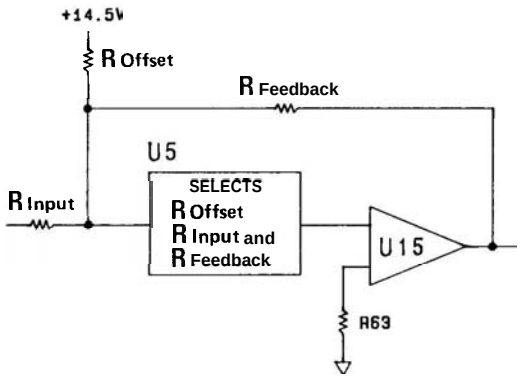

Band	R Input	R Offset	R Feedback
1	R64	—	R66
2	R67	R68	R69
3	R70	R71	R72
4	R73	R74	R75
5	R76	R77	R78
6	R79	R80	R81

FIGURE 8-30. DPM DRIVER GAIN SELECTION. SIMPLIFIED DIAGRAM

Second LO Driver (E)

The Second LO Driver varies the voltage applied to the varactors in the second LO cavity (A5CR2 and A5CR3). The upper limit of this voltage is dependent on the second LO sensitivity and varies during operation from about 1V to between 7V and 30V. An increase in the drive voltage increases the second LO frequency. The SIG IDENT and ALT IF buttons both change the second LO frequency.

ALT IF. When ALT IF is not selected, TP2 is at −7.5V, setting the collector of Q2 to +15V (±7V). When ALT IF is selected, TP2 goes to −2.5V, setting the base of Q2 to about +5V. The voltage on the collector of Q2 varies within the range of 1V to 28V as needed to drive the varactors in the Second Converter Assembly A5. The shift in drive voltage serves to offset the second LO to the alternate IF.

SIG IDENT. When SIG IDENT is not selected, U10 pin 4 is low and pin 11 is high. This supplies a current through R37 and R38 to bias the second LO 1 MHz away from its minimum frequency. When SIG IDENT is selected, pins 4 and 11 both are either high or low together, depending on the sense of the PM line (PM is low for bands 1, 3, and 5). This either raises or lowers the frequency of the second LO 1 MHz. Resistor R39 provides additional shift, if necessary, when ALT IF is not activated (the second LO may be less sensitive at that frequency). Flip-flop U3 alternates both the frequency shift and level shift on every other retrace.

Auto Scan Time (AST) Drivers (C)

As scan and bands change, sweep times must be changed to maintain amplitude calibration. The AST (auto scan time) line, which goes to the Sweep Generator/Bandwidth Control Assembly A9, varies the sweep time by varying the amount of current it carries. More current speeds the sweep rate, less current slows it. The current is controlled through a current mirror on the Marker Assembly A8, comprising U6a and U6d. The current mirror is a common-emitter amplifier with a current gain of −1. Collector current changes through U6a (caused by U11a, U11b, or U11c turning on) are mirrored in U6d.

Scan Attenuator (B)

Operational amplifiers U13 and U17 are buffer amplifiers that are not directly involved in the switchable scan attenuation, but, if one fails, the scan becomes uncalibrated. The switching is done by Q4, Q6, and U12. For fundamental mixing bands 1 and 2, U12b is on, all others are off. Resistors R22 and R23 form a voltage divider with R24, R25, and R26. The division ratio is changed depending on whether Q4 and Q6 are on or off. For higher mixing modes (bands 3 through 6), U12a or U12d is switched on, picking off the sweep from a lower amplitude point on the voltage divider. For full span operation, U12c is enabled so that no attenuation is added for higher mixing modes.

MARKER ASSEMBLY A8, TROUBLESHOOTING

DPM Accuracy: DPM inaccuracy is often traceable to the calibrated-gain circuit in the DPM Driver (block D). The most common cause is the gain determining resistors associated with U15. A generalized model of U15, with associated resistors, is shown as Figure 8-30. Variations in the input resistors or in the feedback resistors will cause DPM inaccuracies throughout its range. Offset resistor variations primarily affect the low end of the range. When troubleshooting DPM inaccuracies, always start with the components related to the worst band.

Marker Accuracy: The marker accuracy is dependent on the frequency accuracy of the first LO and the frequency accuracy of its sweep end-points (i.e., the frequencies that correspond to the ±5V extremes of the sweep).

Spanwidth Accuracy: Observe the positions of the FREQ SPAN/DIV switch and how they relate to the spanwidth errors. The problem could be originating from either the Marker Assembly A8 or the Sweep Generator/Bandwidth Control Assembly A9 or both.

Auto Scan Time (AST) Accuracy: Observe front panel switch positions to isolate the problem area. Auto scan time can also be affected by circuits on the Sweep Generator/Bandwidth Control Assembly A9 and the VIDEO FILTER control position. If the AST problem is band-related, the Marker Assembly A8 is the most probable cause. If the AST problem is either bandwidth- or scanwidth-related, the most probable cause is the Sweep Generator/Bandwidth Control Assembly A9. The greater the load on the AST line, the greater the current demand. The greater the current demand, the faster the sweep rate.

Residual FM: Residual FM can originate from the Second LO Driver (block E). The most common failures are: R88, R87, R33, R34, U1, U7, R37, and R38, in that order.

TABLE 8-5. MARKER ASSEMBLY A8, REPLACEABLE PARTS (1 OF 3)

Reference Designation	HP Part Number	C D	Qty	Description	Mfr Code	Mfr Part Number
A8	08559-60075	1	1	MARKER ASSEMBLY	28480	08559-60075
A8C1	0160-4004	8	2	CAPACITOR-FXD .1UF +-20% 50VDC CER	28480	0160-4004
A8C2	0160-4004	8		CAPACITOR-FXD .1UF +-20% 50VDC CER	28480	0160-4004
A8C3	0160-2055	9	1	CAPACITOR-FXD .01UF +80-20% 100VDC CER	28480	0160-2055
A8CR1	1901-0050	3	10	DIODE-SWITCHING 80V 200MA 2NS DO-35	28480	1901-0050
A8CR2	1901-0535	9	3	DIODE-SM SIG SCHOTTKY	28480	1901-0535
A8CR3	1901-0050	3		DIODE-SWITCHING 80V 200MA 2NS DO-35	28480	1901-0050
A8CR4	1901-0050	3		DIODE-SWITCHING 80V 200MA 2NS DO-35	28480	1901-0050
A8CR5	1901-0050	3		DIODE-SWITCHING 80V 200MA 2NS DO-35	28480	1901-0050
A8CR6	1901-0050	3		DIODE-SWITCHING 80V 200MA 2NS DO-35	28480	1901-0050
A8CR7	1901-0050	3		DIODE-SWITCHING 80V 200MA 2NS DO-35	28480	1901-0050
A8CR8	1901-0050	3		DIODE-SWITCHING 80V 200MA 2NS DO-35	28480	1901-0050
A8CR9	1901-0050	3		DIODE-SWITCHING 80V 200MA 2NS DO-35	28480	1901-0050
A8CR10	1901-0050	3		DIODE-SWITCHING 80V 200MA 2NS DO-35	28480	1901-0050
A8CR11	1901-0050	3		DIODE-SWITCHING 80V 200MA 2NS DO-35	28480	1901-0050
A8CR12	1901-0050	3		DIODE-SWITCHING 80V 200MA 2NS DO-35	28480	1901-0050
A8CR13	1901-0050	3		DIODE-SWITCHING 80V 200MA 2NS DO-35	28480	1901-0050
A8CR14	1901-0050	3		DIODE-SWITCHING 80V 200MA 2NS DO-35	28480	1901-0050
A8CR15	1901-0050	3		DIODE-SWITCHING 80V 200MA 2NS DO-35	28480	1901-0050
A8CR16	1901-0050	3		DIODE-SWITCHING 80V 200MA 2NS DO-35	28480	1901-0050
A8CR17	1901-0050	3		DIODE-SWITCHING 80V 200MA 2NS DO-35	28480	1901-0050
A8CR18	1901-0050	3		DIODE-SWITCHING 80V 200MA 2NS DO-35	28480	1901-0050
A8CR19	1901-0050	3		DIODE-SWITCHING 80V 200MA 2NS DO-35	28480	1901-0050
A8CR20	1901-0535	9		DIODE-SM SIG SCHOTTKY	28480	1901-0535
A8CR21	1901-0535	9		DIODE-SM SIG SCHOTTKY	28480	1901-0535
A8Q1	1854-0404	0	4	TRANSISTOR NPN SI TO-18 PD=360MW	28480	1854-0404
A8Q2	1854-0404	0		TRANSISTOR NPN SI TO-18 PD=360MW	28480	1854-0404
A8Q3	1854-0404	0		TRANSISTOR NPN SI TO-18 PD=360MW	28480	1854-0404
A8Q4	1855-0414	4	2	TRANSISTOR J-FET 2N4393 N-CHAN D-MODE	04713	2N4393
A8Q5	1854-0404	0		TRANSISTOR NPN SI TO-18 PD=360MW	28480	1854-0404
A8Q6	1855-0414	4		TRANSISTOR J-FET 2N4393 N-CHAN D-MODE	04713	2N4393
A8R1	0757-0465	6	23	RESISTOR 100K 1% .125W F TC=0+-100	24546	C4-1/8-T0-1003-F
A8R2	0757-0465	6		RESISTOR 100K 1% .125W F TC=0+-100	24546	C4-1/8-T0-1003-F
A8R3	0757-0465	6		RESISTOR 100K 1% .125W F TC=0+-100	24546	C4-1/8-T0-1003-F
A8R4	0757-0465	6		RESISTOR 100K 1% .125W F TC=0+-100	24546	C4-1/8-T0-1003-F
A8R5	0757-0465	6		RESISTOR 100K 1% .125W F TC=0+-100	24546	C4-1/8-T0-1003-F
A8R6	0757-0465	6		RESISTOR 100K 1% .125W F TC=0+-100	24546	C4-1/8-T0-1003-F
A8R7	0757-0465	6		RESISTOR 100K 1% .125W F TC=0+-100	24546	C4-1/8-T0-1003-F
A8R8	0757-0442	9	11	RESISTOR 10K 1% .125W F TC=0+-100	24546	C4-1/8-T0-1002-F
A8R9	0757-0442	9		RESISTOR 10K 1% .125W F TC=0+-100	24546	C4-1/8-T0-1002-F
A8R10	0757-0442	9		RESISTOR 10K 1% .125W F TC=0+-100	24546	C4-1/8-T0-1002-F
A8R11	0757-0442	9		RESISTOR 10K 1% .125W F TC=0+-100	24546	C4-1/8-T0-1002-F
A8R12	0757-0442	9		RESISTOR 10K 1% .125W F TC=0+-100	24546	C4-1/8-T0-1002-F
A8R13	0757-0442	9		RESISTOR 10K 1% .125W F TC=0+-100	24546	C4-1/8-T0-1002-F
A8R14	0757-0280	3	3	RESISTOR 1K 1% .125W F TC=0+-100	24546	C4-1/8-T0-1001-F
A8R15	0698-3157	3	3	RESISTOR 19.6K 1% .125W F TC=0+-100	24546	C4-1/8-T0-1962-F
A8R16	0698-8827	4	2	RESISTOR 1M 1% .125W F TC=0+-100	28480	0698-8827
A8R17	0698-8827	4		RESISTOR 1M 1% .125W F TC=0+-100	28480	0698-8827
A8R18	0757-0199	3	2	RESISTOR 21.5K 1% .125W F TC=0+-100	24546	C4-1/8-T0-2152-F
A8R19	0757-0199	3		RESISTOR 21.5K 1% .125W F TC=0+-100	24546	C4-1/8-T0-2152-F
A8R20	0757-0278	9	2	RESISTOR 1.78K 1% .125W F TC=0+-100	24546	C4-1/8-T0-1781-F
A8R21	0757-0278	9		RESISTOR 1.78K 1% .125W F TC=0+-100	24546	C4-1/8-T0-1781-F
A8R22	0698-6877	0	1	RESISTOR 12.9K .5% .125W F TC=0+-50	28480	0698-6877
A8R23	0698-4440	9	1	RESISTOR 3.4K 1% .125W F TC=0+-100	24546	C4-1/8-T0-3401-F
A8R24	0698-6271	8	1	RESISTOR 3K .1% .125W F TC=0+-50	28480	0698-6271
A8R25	0698-3491	8	1	RESISTOR 1K .1% .125W F TC=0+-50	28480	0698-3491
A8R26	0698-6624	5	1	RESISTOR 2K .1% .125W F TC=0+-25	28480	0698-6624
A8R27	0757-0465	6		RESISTOR 100K 1% .125W F TC=0+-100	24546	C4-1/8-T0-1003-F
A8R28	0757-0465	6		RESISTOR 100K 1% .125W F TC=0+-100	24546	C4-1/8-T0-1003-F
A8R29	0757-0465	6		RESISTOR 100K 1% .125W F TC=0+-100	24546	C4-1/8-T0-1003-F
A8R30	0757-0465	6		RESISTOR 100K 1% .125W F TC=0+-100	24546	C4-1/8-T0-1003-F
A8R31	0757-0464	5	1	RESISTOR 90.9K 1% .125W F TC=0+-100	24546	C4-1/8-T0-9092-F
A8R32	0698-3266	5	1	RESISTOR 237K 1% .125W F TC=0+-100	24546	C4-1/8-T0-2373-F
A8R33	0699-0901	1	3	RESISTOR 33.5K .1% .1W F TC=0+-10	28480	0699-0901
A8R34	2100-3161	6	3	RESISTOR-TRMR 20K 10% C SIDE-ADJ 17-TRN	02111	43P203
A8R35	0698-3453	2	2	RESISTOR 196K 1% .125W F TC=0+-100	24546	C4-1/8-T0-1963-F
A8R36	0757-0462	3	1	RESISTOR 75K 1% .125W F TC=0+-100	24546	C4-1/8-T0-7502-F
A8R37	0757-0465	6		RESISTOR 100K 1% .125W F TC=0+-100	24546	C4-1/8-T0-1003-F
A8R38	0757-0465	6		RESISTOR 100K 1% .125W F TC=0+-100	24546	C4-1/8-T3-1003-F
A8R39	2100-3163	8	1	RESISTOR-TRMR 1M 20% C SIDE-ADJ 17-TRN	02111	43P105
A8R40	2100-3061	5	1	RESISTOR-TRMR 500K 10% C SIDE-ADJ 17-TRN	02111	43P504

TABLE 8-5. MARKER ASSEMBLY A8, REPLACEABLE PARTS (2 OF 3)

Reference Designation	HP Part Number	CD	Qty	Description	Mfr Code	Mfr Part Number
A8R41	0757-0442	9		RESISTOR 13K 1% .125W F TC=0+-100	24546	C4-1/8-T0-1302-F
A8R42	0698-7794	2	2	RESISTOR 10K .25% .125W F TC=0+-100	19701	MF4C1/8-T0-1002-C
A8R43	0757-0442	9		RESISTOR 13K 1% .125W F TC=0+-100	24546	C4-1/8-T0-1302-F
A8R44	0698-3160	8	3	RESISTOR 31.6K 1% .125W F TC=0+-100	24546	C4-1/8-T0-3162-F
A8R45	0757-0465	6		RESISTOR 100K 1% .125W F TC=0+-100	24546	C4-1/8-T0-1003-F
A8R46	0757-0465	6		RESISTOR 100K 1% .125W F TC=0+-100	24546	C4-1/8-T0-1003-F
A8R47	0698-5446	7	1	RESISTOR 31.6K .25% .125W F TC=0+-50	28480	0698-5446
A8R48	0698-3458	7	1	RESISTOR 348K 1% .125W F TC=0+-100	28480	0698-3458
A8R49	0698-3160	8		RESISTOR 31.6K 1% .125W F TC=0+-100	24546	C4-1/8-T0-3162-F
A8R50	0698-0084	9	1	RESISTOR 2.15K 1% .125W F TC=0+-100	24546	C4-1/8-T0-2151-F
A8R51	0698-3157	3		RESISTOR 19.6K 1% .125W F TC=0+-100	24546	C4-1/8-T0-1962-F
A8R52	0698-3157	3		RESISTOR 19.6K 1% .125W F TC=0+-100	24546	C4-1/8-T0-1962-F
A8R53	0757-0465	6		RESISTOR 100K 1% .125W F TC=0+-100	24546	C4-1/8-T0-1003-F
A8R54	0757-0465	6		RESISTOR 100K 1% .125W F TC=0+-100	24546	C4-1/8-T0-1003-F
A8R55	0757-0465	6		RESISTOR 100K 1% .125W F TC=0+-100	24546	C4-1/8-T0-1003-F
A8R56	0683-3355	2	1	RESISTOR 3.3M 5% .25W FC TC=-900/+1100	01121	CB3355
A8R57	0683-2255	9	1	RESISTOR 2.2M 5% .25W FC TC= 900/+1100	01121	CB2255
A8R58	0699-0378	6	3	RESISTOR 23.52K .025% .1W F TC=0+-5	28480	0699-0378
A8R59	0699-0378	6		RESISTOR 23.52K .025% .1W F TC=0+-5	28480	0699-0378
A8R60	0757-0442	9		RESISTOR 10K 1% .125W F TC=0+-100	24546	C4-1/8-T0-1002-F
A8R61	2100-3161	6		RESISTOR-TRMR 20K 10% C SIDE-ADJ 17-TRN	02111	43P203
A8R62	2100-3161	6		RESISTOR-TRMR 20K 10% C SIDE-ADJ 17-TRN	02111	43P203
A8R63	0757-0438	3	1	RESISTOR 5.11K 1% .125W F TC=0+-100	24546	C4-1/8-T0-5111-F
A8R64	0699-0371	9	3	RESISTOR 196K .025% .1W F TC=0+-5	28480	0699-0371
A8R65	0757-0401	9	2	RESISTOR 100 1% .125W F TC=0+-100	24546	C4-1/8-T0-101-F
A8R66	0699-0376	4	2	RESISTOR 11.76K .025% .1W F TC=0+-5	28480	0699-0376
A8R67	0699-0371	9		RESISTOR 196K .025% .1W F TC=0+-5	28480	0699-0371
A8R68	0699-0374	2	1	RESISTOR 141.746K .025% .1W F TC=0+-5	28480	0699-0374
A8R69	0699-0376	4		RESISTOR 11.76K .025% .1W F TC=0+-5	28480	0699-0376
A8R70	0699-0379	7	3	RESISTOR 68.1K .025% .1W F TC=0+-5	28480	0699-0379
A8R71	0699-0370	8	1	RESISTOR 196.998K .025% .1W F TC=0+-5	28480	0699-0370
A8R72	0699-0375	3	1	RESISTOR 8.172K .025% .1W F TC=0+-5	28480	0699-0375
A8R73	0699-0371	9		RESISTOR 196K .025% .1W F TC=0+-5	28480	0699-0371
A8R74	0699-0372	0	1	RESISTOR 100.994K .025% .1W F TC=0+-5	28480	0699-0372
A8R75	0699-0378	6		RESISTOR 23.52K .025% .1W F TC=0+-5	28480	0699-0378
A8R76	0699-0379	7		RESISTOR 68.1K .025% .1W F TC=0+-5	28480	0699-0379
A8R77	0699-0373	1	1	RESISTOR 147.748K .025% .1W F TC=0+-5	28480	0699-0373
A8R78	0699-0377	5	2	RESISTOR 12.258K .025% .1W F TC=0+-5	28480	0699-0377
A8R79	0699-0379	7		RESISTOR 68.1K .025% .1W F TC=0+-5	28480	0699-0379
A8R80	0699-0380	0	1	RESISTOR 73.8741K .025% .1W F TC=0+-5	28480	0699-0380
A8R81	0699-0377	5		RESISTOR 12.258K .025% .1W F TC=0+-5	28480	0699-0377
A8R83	0698-7794	2		RESISTOR 10K .25% .125W F TC=0+-100	19701	MF4C1/8-T0-1002-C
A8R84	0698-3160	8		RESISTOR 31.6K 1% .125W F TC=0+-100	24546	C4-1/8-T0-3162-F
A8R85	0757-0442	9		RESISTOR 10K 1% .125W F TC=0+-100	24546	C4-1/8-T0-1002-F
A8R86	0757-0442	9		RESISTOR 10K 1% .125W F TC=0+-100	24546	C4-1/8-T0-1002-F
A8R87	0699-0901	1		RESISTOR 33.5K .1% .1W F TC=0+-10	28480	0699-0901
A8R88	0699-0901	1		RESISTOR 33.5K .1% .1W F TC=0+-10	28480	0699-0901
A8R91	0698-3162	0	1	RESISTOR 46.4K 1% .125W F TC=0+-100	24546	C4-1/8-T0-4642-F
A8R92	0757-0465	6		RESISTOR 100K 1% .125W F TC=0+-100	24546	C4-1/8-T0-1003-F
A8R93	0757-0440	7	1	RESISTOR 7.5K 1% .125W F TC=0+-100	24546	C4-1/8-T0-7501-F
A8R94	0757-0459	8	1	RESISTOR 56.2K 1% .125W F TC=0+-100	24546	C4-1/8-T0-5622-F
A8R95	0757-0465	6		RESISTOR 100K 1% .125W F TC=0+-100	24546	C4-1/8-T0-1003-F
A8R96	0757-0470	3	1	RESISTOR 162K 1% .125W F TC=0+-100	24546	C4-1/8-T0-1623-F
A8R97	0757-0280	3		RESISTOR 1K 1% .125W F TC=0+-100	24546	C4-1/8-T0-1001-F
A8R98	0757-0280	3		RESISTOR 1K 1% .125W F TC=0+-100	24546	C4-1/8-T0-1001-F
A8R99	0757-0467	8	2	RESISTOR 121K 1% .125W F TC=0+-100	24546	C4-1/8-T0-1213-F
A8R100	0698-3457	6	1	RESISTOR 316K 1% .125W F TC=0+-100	28480	0698-3457
A8R101	0698-3453	2		RESISTOR 196K 1% .125W F TC=0+-100	24546	C4-1/8-T0-1963-F
A8R102	0757-0467	8		RESISTOR 121K 1% .125W F TC=0+-100	24546	C4-1/8-T0-1213-F
A8R103	0757-0465	6		RESISTOR 100K 1% .125W F TC=0+-100	24546	C4-1/8-T0-1003-F
A8R104	0757-0465	6		RESISTOR 100K 1% .125W F TC=0+-100	24546	C4-1/8-T0-1003-F
A8R105	0757-0465	6		RESISTOR 100K 1% .125W F TC=0+-100	24546	C4-1/8-T0-1003-F
A8R106	0757-0401	9		RESISTOR 100 1% .125W F TC=0+-100	24546	C4-1/8-T0-101-F
A8R108	0698-7278	9	1	RESISTOR 26.1K 1% .05W F TC=0+-100	24546	C3-1/8-T0-2612-F
A8R109	0698-7285	6	1	RESISTOR 110K 1% .05W F TC=0+-100	24546	C3-1/8-T0-1103-F
A8R110	0699-0903	3	2	RESISTOR 10K .1% .1W F TC=0+-10	28480	0699-0903
A8R111	0699-0903	3		RESISTOR 10K .1% .1W F TC=0+-10	28480	0699-0903
A8TP1	1251-0600	0	5	CONNECTOR-SGL CONT PIN 1.14-MM-BSC-SZ SQ	28480	1251-0600
A8TP2	1251-0600	0		CONNECTOR-SGL CONT PIN 1.14-MM-BSC-SZ SQ	28480	1251-0600
A8TP3	1251-0600	0		CONNECTOR-SGL CONT PIN 1.14-MM-BSC-SZ SQ	28480	1251-0600
A8TP4	1251-0600	0		CONNECTOR-SGL CONT PIN 1.14-MM-BSC-SZ SQ	28480	1251-0600
A8TP5	1251-0600	0		CONNECTOR-SGL CONT PIN 1.14-MM-BSC-SZ SQ	28480	1251-0600
A8U1	5180-2315	1	4	IC OSC MIOPAMP	28480	5180-2315
A8U2	1820-1548	4	1	IC SWITCH ANLG QUAD 14-DIP-C PKG	3L585	CD4066AY
A8U3	1820-1530	4	1	IC FF CMOS J-K M/S POS-EDGE-TRIG DUAL	3L585	CD4027AF
A8U4	1826-0092	3	2	IC OP AMP GP DUAL TO-99 PKG	28480	1826-0092
A8U5	1820-1547	3	1	IC MULTIPLXR 8-CHAN-ANLG 16-DIP-C PKG	04713	MC14051BCL

TABLE 8-5. MARKER ASSEMBLY A8, REPLACEABLE PARTS (3 OF 3)

Reference Designation	HP Part Number	C D	Qty	Description	Mfr Code	Mfr Part Number
A8U6	1858-0071	5	1	TRANSISTOR ARRAY PLSTC TO-116	04713	MPQ3799
A8U7	5180-2315	1		IC OSC MIOPAMP	28480	5180-2315
A8U8	1820-1534	8	3	IC GATE CMOS NOR QUAD 2-INP	3L565	CD4001AF
A8U9	1820-1534	8		IC GATE CMOS NOR QUAD 2-INP	3L565	CD4001AF
A8U13	1820-1534	8		IC GATE CMOS NOR QUAD 2-INP	3L565	CD4001AF
A8U11	1858-0032	8	1	TRANSISTOR ARRAY 14-PIN PLSTIC DIP	3L565	CA3146E
A8U12	1826-0416	5	1	IC SWITCH ANLG QUAD 16 DIP-C PKG	27014	LF13331D
A8U13	5180-2315	1		IC OSC MIOPAMP	28480	5180-2315
A8U14	1826-0392	3		IC OP AMP GP DUAL TO-99 PKG	28480	1826-0392
A8U15	1826-1058	3	2	IC OP AMP GP 8 TO-99 PKG	28480	1826-1058
A8U16	1820-1542	8	1	IC BFR CMOS INV HEX 1-INP	3L565	CD4049AF
A8U17	5180-2315	1		IC OSC MIOPAMP	28480	5180-2315
A8U18	1826-1058	3		IC OP AMP GP 8-TO-99 PKG	28480	1826-1058
				A8 MISCELLANEOUS PARTS		
	2230-3197	6	1	SCREW MACH 4-40 .375-IN-LG PAN-HD-POZI	28480	2200-0107

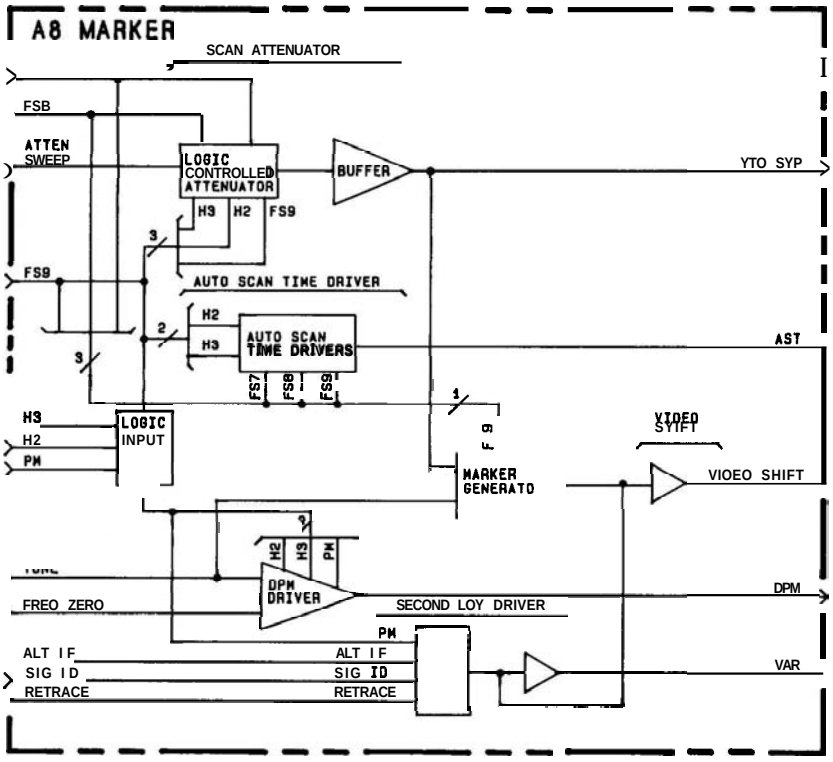

FIGURE 8-31. MARKER ASSEMBLY A8, BLOCK DIAGRAM

A8
MARKER ASSEMBLY

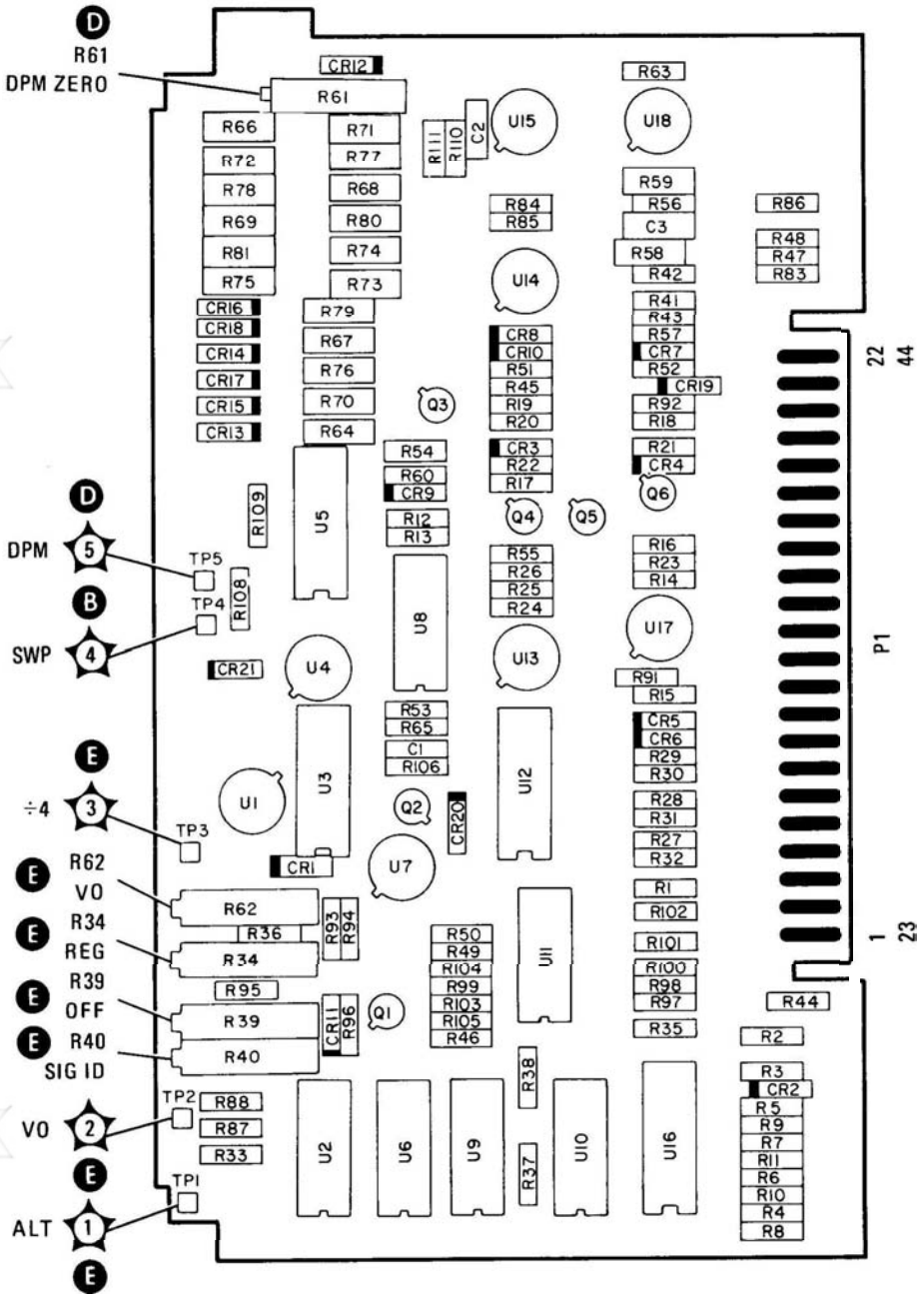

FIGURE 8-32. MARKER ASSEMBLY A8, COMPONENT LOCATIONS

A8 MARKER ASSEMBLY
08559-60075 (1 OF 2)

P1

PIN	SIGNAL	TO/FROM	FUNCTION BLOCK
1 23	VIDEO SHIFT SIG ID	A2, A14 A2	C E
2 24	+100V ALT IF	REAR PANEL P1:30 A2	H E
3 25	NC VAR	 A5A2	 E
4 26	+15V +15V	REAR PANEL P1:29 REAR PANEL P1:29	H H
5 27	GND H2	A16 A2	H A
6 28	RETRACE H3	A9 A2	E A
7 29	FREQ ZERO PM	A2 A2	D A
8 30	YTO SWP FS7	A7 A2	B B
9 31	NC FS8	 A2	 B
10 32	-10V NC	A7 	H
11 33	GND ATTEN SWP	A16 A8	H B
12 34	-12.6V AST	REAR PANEL P1:28 A8	H C
13 35	NC NC	 	
14 36	NC DPM1	 A1	 NC
15 37	NC DPM2	 A1	 NC
16 38	DPMSG DPMSG	A1 A1	NC H
17 39	TUNE NC	A7 	D
18 40	NC SWEEP	 A8	 NC
19 41	FS9 NC	A2 	B
20 42	NC +14.5V	 A7	 H
21 43	DPMAG DPMAG	A1 A1	H H
22 44	GND DPMA	A16 A1	H D

H POWER SUPPLIES

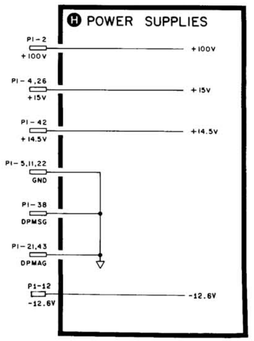

I +5V AND +10V POWER SUPPLIES

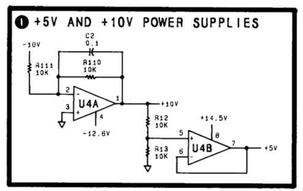

BAND	OUTPUT PM	H2	H3
.01 – 3	L	H	H
6 – 9	H	H	H
3 – 9	L	L	H
9 – 15	H	L	H
6 – 15	L	H	L
12.1 – 21	H	H	L

FRONT SWITCH ASSEMBLY A2

FREQ SPAN/DIV

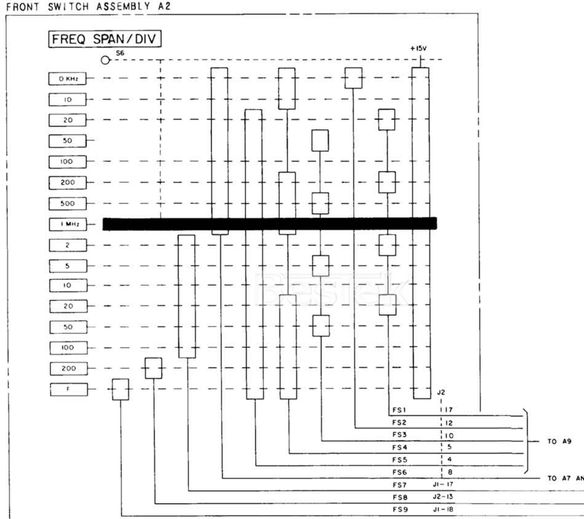

FREQUENCY BAND GHz (REFER TO ADJACENT TABLE)

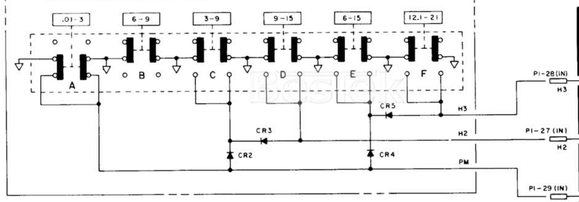

A LOGIC INPUTS

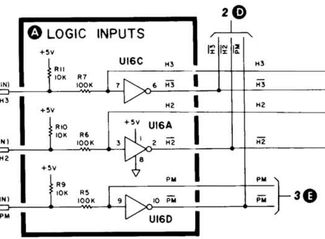

B SCAN ATTENUATOR

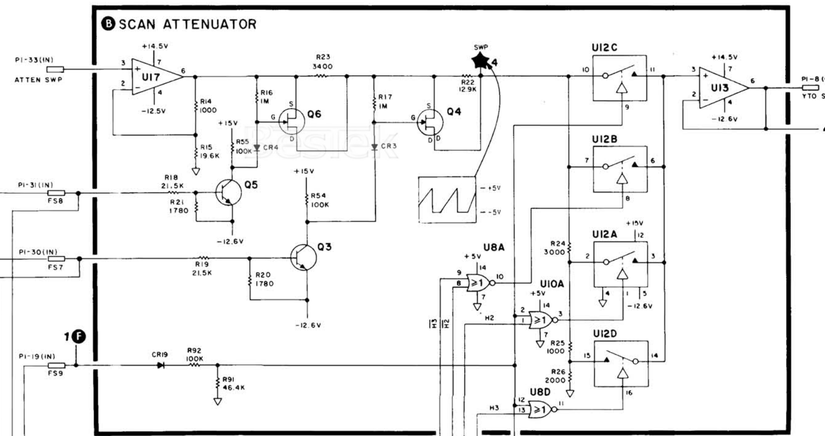

C AUTO SCAN TIME DRIVERS

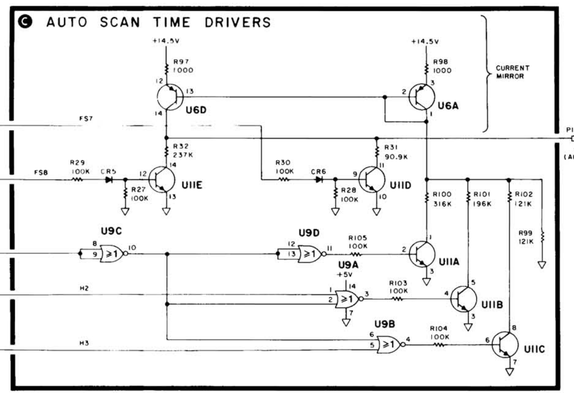

A8

SERIAL PREFIX: 2347A

FIGURE 8-33. MARKER ASSEMBLY A8, SCHEMATIC DIAGRAM (1 OF 2)

A8 MARKER ASSEMBLY
08559-60075 (2 OF 2)

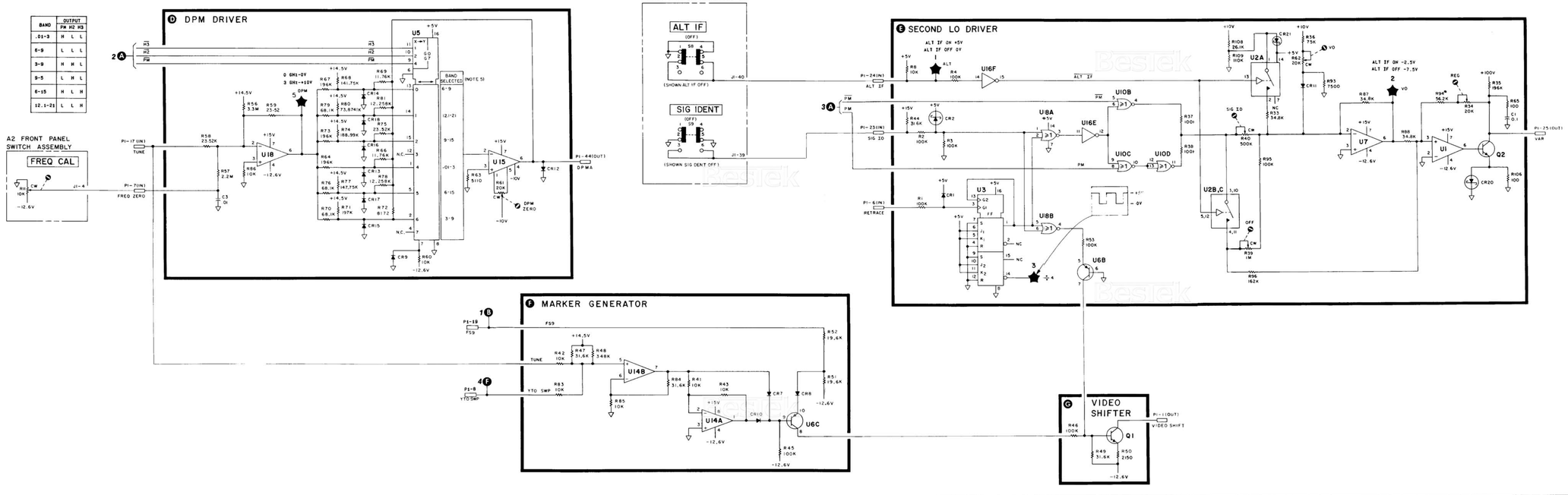

NOTES:

1. REFERENCE DESIGNATORS WITHIN THIS ASSEMBLY ARE ABBREVIATED. PREFIX ABBREVIATION WITH ASSEMBLY NUMBER FOR COMPLETE REFERENCE DESIGNATOR.

2. UNLESS OTHERWISE INDICATED:
   RESISTANCE IN OHMS (Ω)
   CAPACITANCE IN MICROFARADS (μF)
   INDUCTANCE IN MICROHENRIES (μH)

3. U16B (U16 PINS 4, 5) IS NOT USED. THE INPUT (PIN 5) IS CONNECTED TO U16A OUTPUT (PIN 2) AND THE OUTPUT (PIN 4) IS NOT CONNECTED.

4. U2D (U2 PINS 6, 8, 9) IS NOT USED. THE INPUT (PIN 8) IS NOT CONNECTED AND THE OUTPUT (PIN 9) IS CONNECTED TO THE ENABLE (PIN 6) WHICH IN TURN IS CONNECTED TO GROUND.

5. THE BAND SELECTED NUMBERS INDICATE WHICH GROUP OF RESISTORS IS SELECTED WITH THE SELECTED BAND.

6. PIN CONFIGURATIONS FOR ICS AND TRANSISTORS.

6. MNEMONIC TABLE

MNEMONIC	DESCRIPTION
AST	AUTO SCAN TIME
OPMA	DIGITAL PANEL METER SIGNAL VOLTAGE
DPMAG	DIGITAL PANEL METER ANALOG GND
DPMSG	DIGITAL PANEL METER SIGNAL GND
FS7 FS8 FS9	FREQUENCY SPAN CONTROL LINES . FS9 SELECTS FULL SPAN OR PER DIVISION (+15V = FULL)
H2	LOW=SECOND HARMONIC BAND
H3	LOW=THIRD HARMONIC BAND
PM	SELECT PLUS OR MINUS HARMONIC CONVERSION
VAR	VARACTOR BIAS VOLTAGE

FIGURE 8-33. MARKER ASSEMBLY A8, SCHEMATIC DIAGRAM (2 OF 2)

SWEEP GENERATOR/BANDWIDTH CONTROL ASSEMBLY A9, CIRCUIT DESCRIPTION

The Sweep Generator/Bandwidth Control Assembly A9 consists of the sweep generator circuit, the sweep trigger circuits, the resolution bandwidth control circuits, the video filtering circuits, the sweep attenuator circuit, and the sweep offset circuit.

A linear sweep from −5V to +5V is provided by the sweep generator circuit. Normally, the sweep operates in a free run mode with sweep times automatically generated as a function of the FREQ SPAN/DIV, RESOLUTION BW, VIDEO FILTER, and BAND settings.

Fixed calibrated sweep times are available, ranging from 2 microseconds per division to 10 seconds per division. This equals a full sweep time (10 divisions) of 20 microseconds to 100 seconds. Fixed sweep times are set with the SWEEP TIME/DIV control and are used mainly in zero span to determine the modulation frequency of an input signal. Modulation frequency determination is possible because during zero span operation the analyzer displays the signal in the time domain rather than the frequency domain. The sweep can also be controlled manually from the front panel with the MAN sweep control.

Besides internal triggering, SINGLE, VIDEO, and LINE triggering modes are also available. SINGLE starts or stops a single sweep from the front panel. VIDEO triggering allows the sweep to be synchronized with the displayed video signal. LINE mode synchronizes the sweep with the line frequency. Single sweeps can be initiated via HP-IB if an HP 853A Spectrum Analyzer Display is being used.

The resolution bandwidth control circuit has three functions: First, it provides bandwidth-filter-control current to the PIN diodes on the Bandwidth Filter assemblies (A11 and A13). Second, it provides current to the sweep generator current source (via the AST line) to control the automatic sweep time circuit as a function of resolution bandwidth. Third, it switches in capacitance to the video filter to provide video filtering as a constant percentage of resolution bandwidth.

The sweep attenuator circuit attenuates the sweep ramp to the Frequency Control Assembly A7 in proportion to the FREQ SPAN/DIV selected. It also provides current to the sweep generator current source (via the AST line) to control the automatic sweep time circuit as a function of the FREQ SPAN/DIV control setting. Note, the sweep ramp passes through the Marker Assembly A8 before being attenuated by the sweep attenuator.

Sweep Generator

The sweep generator circuit comprises the current source, the buffer amplifier, the comparator, and the retrace-out buffer amplifier. A simplified schematic is shown in Figure 8-34.

When AUTO sweep is selected, the voltage ramp is generated as follows: The ramp begins when the dead time capacitor (comprising C10 and C11 in block L) charges to about +1.2V through R44. This turns Q33 on and drives pin 2 of the comparator (block H) below +2.78V. The output of the comparator then rises to about +14V, reverse biasing reset-diode CR2 (block I).

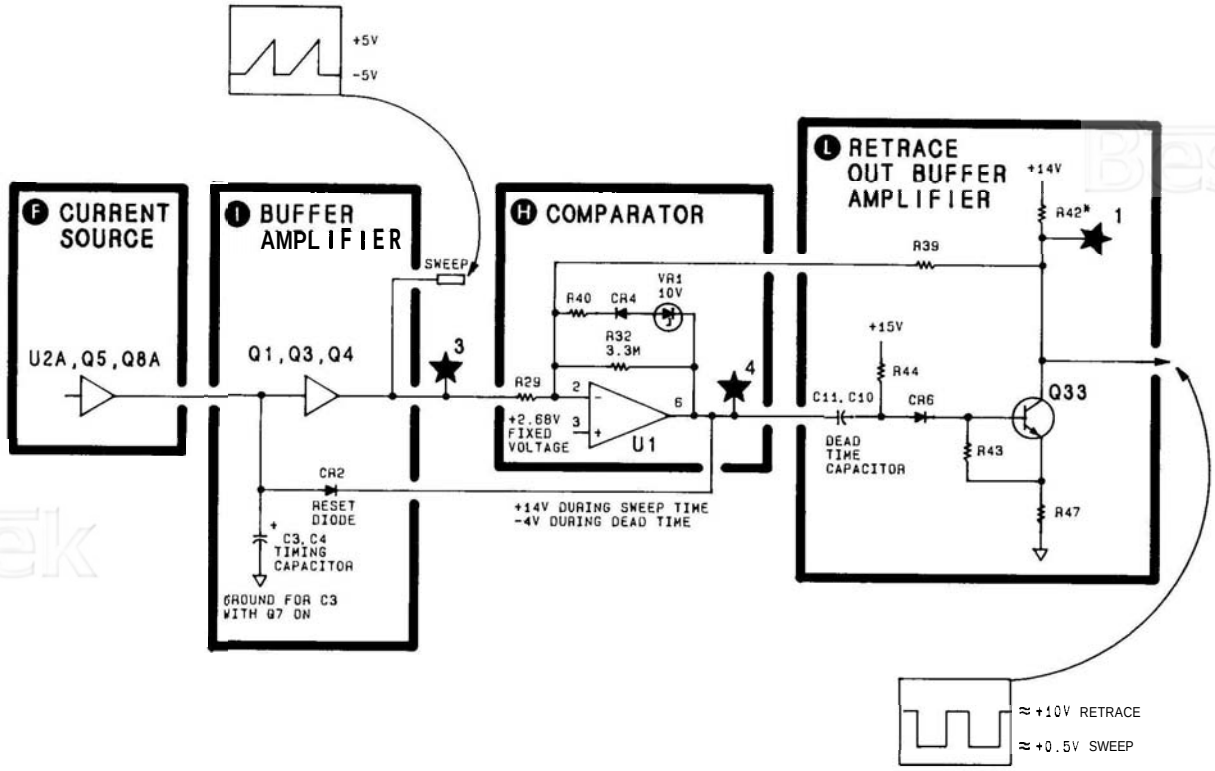

FIGURE 8-34. SIMPLIFIED SCHEMATIC OF SWEEP GENERATOR IN AUTO MODE

With CR2 off, the current source begins charging the timing capacitor (C3 and C4, block I). As the timing capacitor charges, the output of the buffer amplifier increases linearly. Transistor 433 is on and its collector voltage is about +0.5V. The voltage at U1 pin 2 is mainly established by sweep voltage divider R29, R39, and R47*. (Components VR1, CR4, and R40 feed back some of the comparator's output to pin 2 and act upon the divider. These components have been omitted to simplify the model; see block L on the main schematic.)

When the ramp voltage reaches +5V, the U1 pin 2 is approximately +2.78V. Consequently, the comparator's output swings to about –4V. This negative change reverse biases CR6 and turns 433 off. Resistors R42*, R39, and R29 form a divider that, when combined with the feedback loop and the buffer amplifier, sets the ramp voltage at –5V during the dead time. (Factory selected resistor R42* adjusts the dead time voltage.)

The timing capacitor is discharged by the comparator and quickly reaches –5V. The ramp remains at –5V until the dead time capacitor charges to +1.2V and the sweep cycle is repeated.

Other components in the sweep generator have the following functions: Capacitor C6 speeds up the switching of U1. Capacitor C8 and resistor R33 desensitize U1 from power spikes. Frequency compensation for U1 is provided by C9, feedback compensation by C7. Zener diode VR1, switching diode CR4, and resistor R40 bring U1 out of saturation at the end of the ramp to improve switching time.

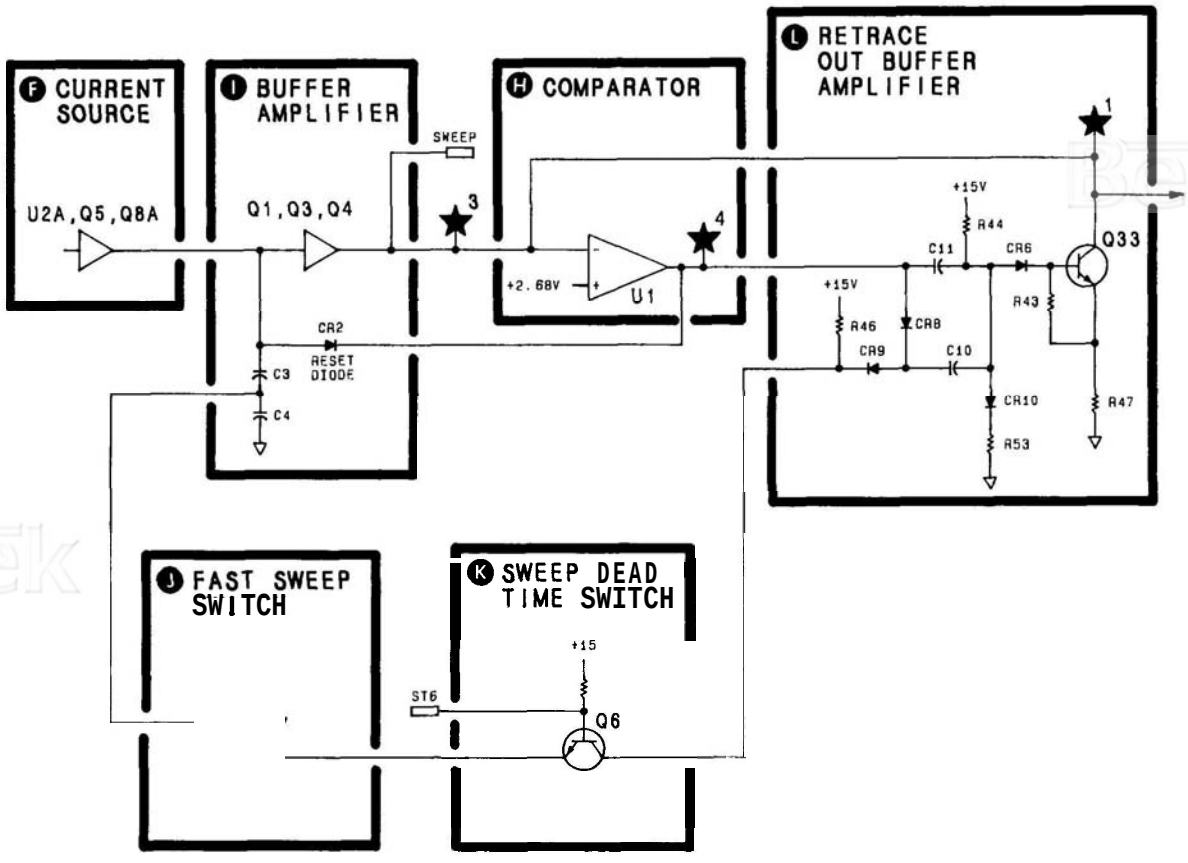

FIGURE 8-35. SIMPLIFIED SCHEMATIC OF FAST/SLOW SWEEP TIME OPERATION

Fast/Slow Sweep Time Operation

Timing capacitors C3 and C4 provide fast and slow sweep operation (refer to Figure 8-35). When a sweep time less than or equal to 1 millisecond per division is selected with the SWEEP TIME/DIV switch, sweep control line ST6 is grounded. This turns sweep dead time switch Q6 (block K) and fast sweep switch Q7 (block J) off. With Q7 off, C3 and C4 are in series; C4 effectively becomes the timing capacitor. With Q6 off, +15V at R46 reverse biases CR9 and CR8, switching C10 out of the dead time circuit. Capacitor C11 now sets a short dead time of about 0.4 millisecond.

In sweep times greater than or equal to 1 millisecond per division or in automatic sweep, control line ST6 is open, turning both Q6 and Q7 on. Transistor Q7 grounds C3 and it becomes the timing capacitor. Transistor Q6 forward biases CR8 and CR9, paralleling C10 and C11. The dead time is effectively established by C10 at about 8.0 milliseconds.

Pulse Shaper (M)

The pulse shaper circuit (block M) consists of an FET switch, a Schmitt trigger, a differentiator, and an emitter follower (see Figure 8-36). Field-effect transistor Q56, and its associated components, disconnects the base of 435 during the sweep cycle to prevent the Schmitt trigger from firing during a sweep. Transistors 434 and 435 make up the Schmitt trigger. Transistor 435 is normally off; 434 is conducting. On the positive portion of the input signal (either video or line), 435 is driven into conduction, turning 434 off. The switching speed of 434 and 435 is increased by feedback (between the collector of 435 and the base of 434) through C13 and R58.

When 435 switches on, the negative change at the collector is differentiated by C14 and R60 and coupled through Q36 to the emitter of 433. The negative pulse causes 433 to turn on. Zener diode VR1 switching diode CR5, and resistor R41 keep 433 on while the ramp is generated. When the ramp is completed, the circuit returns to its dead time state until another negative trigger pulse begins a new sweep cycle.

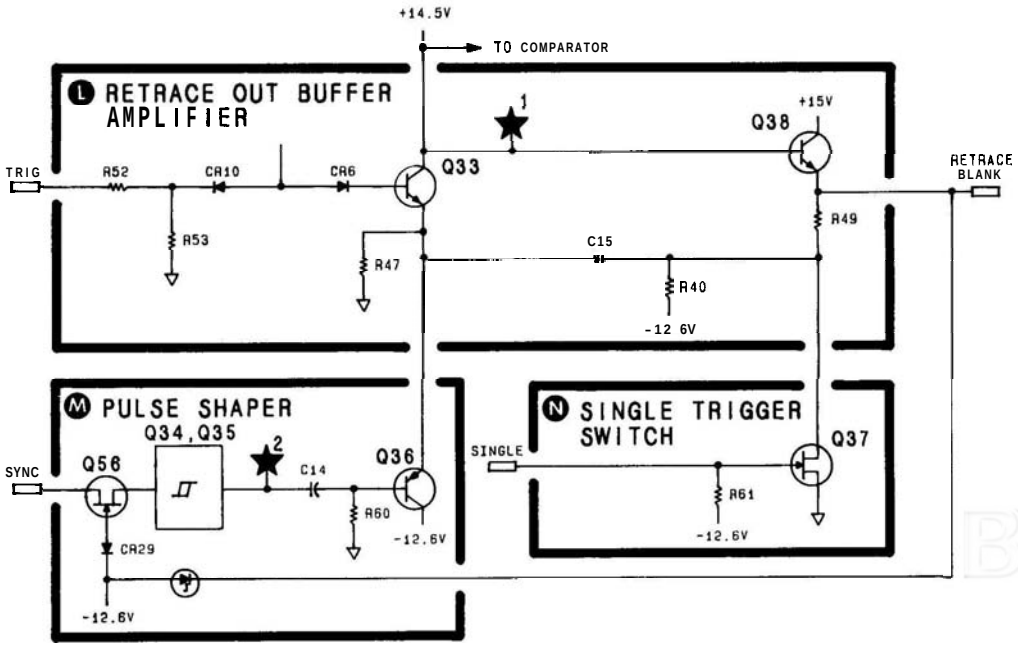

FIGURE 8-36. SIMPLIFIED SCHEMATIC OF VIDEO, LINE, AND AUTO TRIGGER MODES

Free Run

During the FREE RUN (internally triggered) mode, the trigger switch grounds the sync line, which removes the pulse shaper (block M) from the circuit. At the same time, the switch applies +15V through the trigger (TRIG) line to voltage divider R52 and R53 (block L). This divider sets the voltage at the cathode of CR10 at approximately +1.4V. Since the voltage drops across CR10 and CR6 are equal but opposite, they cancel. For this reason, the base of 433 is also about +1.4V. Transistor 433 turns on and drives the comparator to about +14V, initiating free run operation as described in the sweep generator section.

Video Triggering

When the TRIGGER switch is in the VIDEO position, the trigger line is open and the video signal (from the Vertical Driver/Blanking Assembly A15) is applied to the pulse shaper (block M) through the sync line. With the trigger line open, Q33 is held off until a negative pulse turns 433 on and begins the sweep cycle outlined in the sweep generator description. At the end of the sweep, 433 is again held off until the next pulse.

Line Triggering

The sweep may be synchronized with the ac line voltage in the same manner as described for video triggering. With the TRIGGER switch in the line position, the ac line from the mainframe power transformer is connected

to the Pulse Shaper. Resistor A16R2 and capacitor A16C8 on the motherboard attenuate the ac line signal to approximately 1V peak-to-peak (at the base of 435) and filter line spikes.

Single Sweep Triggering and Abort

When the TRIGGER switch is in the single sweep position, the sync line is grounded and the single line open. Transistor 433 is held off by the voltage developed across CR10 and R53. The voltage at the collector of Q33 is at +10V, putting the emitter of Q38 at +9.4V. This charges C15 to +2.4V through voltage divider R48 and R49.

A sweep is initiated when the trigger switch is set to the spring-loaded SINGLE position and +15V is applied to the single trigger switch (block N). When 437 turns on, a negative pulse is produced at the emitter of 433 due to voltage stored by C15. This pulse turns 433 on and starts the sweep cycle.

The sweep may be aborted (reset to −5V) by pressing the single sweep switch while the sweep is in progress. During the sweep, the collector of 433 is at +0.5V. This puts the emitter of Q38 at 0V and charges C15 to −4V through voltage divider R48 and R49. Now when +15V is applied to the single trigger switch (block N), 437 turns on and a positive pulse appears at the emitter of 433. Consequently, 433 turns off and the sweep is aborted.

Manual Sweep

Manual sweep control is obtained when the SWEEP TIME/DIV switch is set to MAN. In the manual position, ST7 is open (see Figure 8-37). Transistor Q40 turns 433 on by supplying current to its base and 439 acts as a

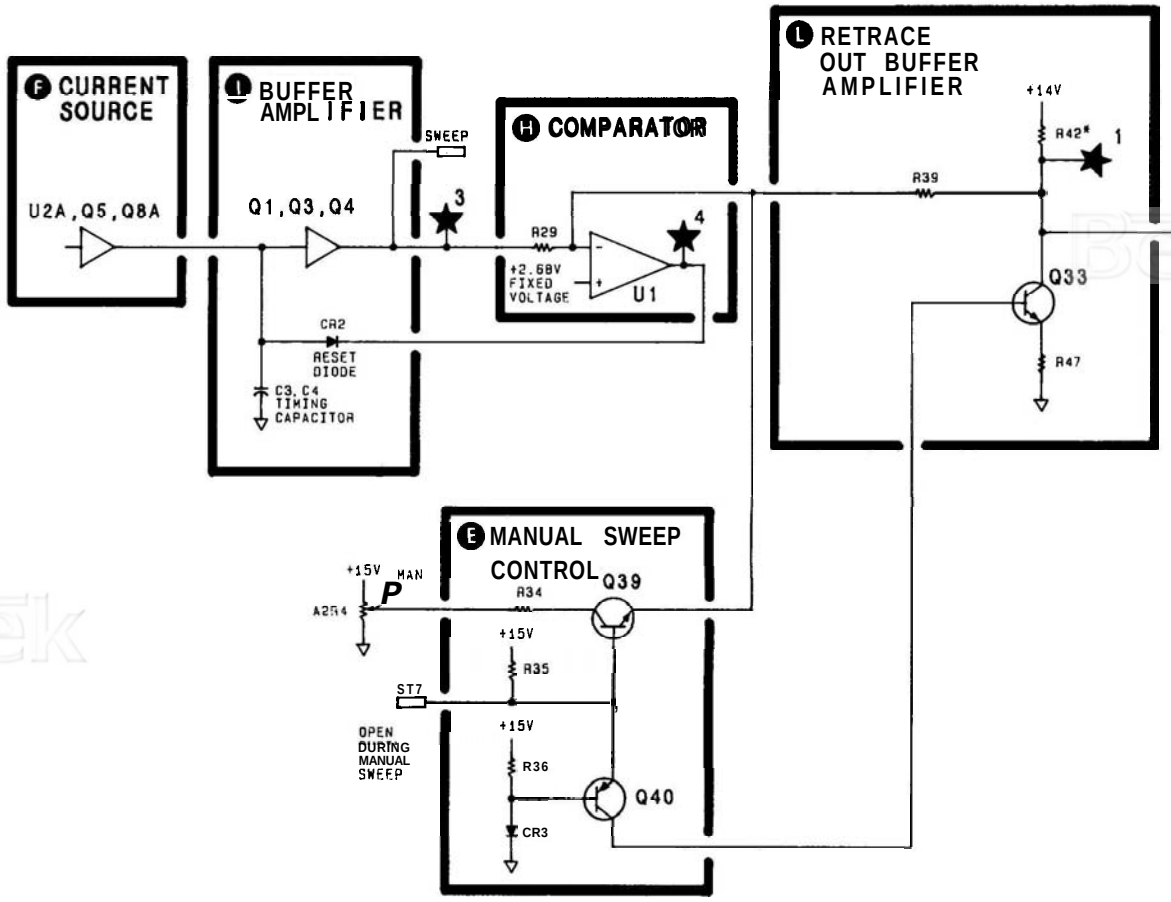

FIGURE 837. MANUAL SWEEP MODE, SIMPLIFIED SCHEMATIC

switch that connects R34 to the comparator. Turning the manual sweep control (A2R4) adjusts the voltage at the control side of R34.

Operational amplifier U1, operating in a linear mode, fixes the voltage at pin 2 by feedback through CR2, the buffer amplifier, and R29. This fixed voltage is applied through Q39 to one side of R34. As the manual sweep potentiometer is adjusted, the voltage across R34 changes, varying the current supplied to pin 2 of the comparator. This current is forced through R29 and develops the voltage offset that varies the ramp voltage.

Current Source (F)

The current source provides a constant charging current to the timing capacitors (block I) at a rate selected by either the SWEEP TIME/DIV switch or the automatic sweep time (AST) line.

Temperature compensation of the current source is accomplished by the nominal +10V supplied by the temperature-dependent power supply (block P). The 1 MS (one millisecond) adjustment fixes a voltage at pin 3 of U2a, while the 5 MS adjustment varies the feedback around U2a.

During calibrated sweep time settings, the Sweep Cal. Switch (Q11 in block G) is off. This allows the feedback ratio of U2a, the voltage source, to be varied by grounding different input resistor combinations (R21 through R24) with the SWEEP TIME/DIV switch. In the automatic sweep mode, Sweep Cal. Switch Q11 is turned on by current through Q9 and R25. The feedback ratio now varies with the resistors attached to the AST line and switched in by various settings of the FREQ SPAN/DIV and RESOLUTION BW switches. When the video filter is on, it also affects the feedback and, therefore, the sweep time, by varying the voltage at the emitter of Q8a.

The voltage applied to the emitter of Q8a from voltage source U2a is proportional to the logarithm of the sweep time. Transistor Q8a converts this voltage to a current directly proportional to the sweep time, which charges the timing capacitors in the buffer amplifier. A current limiter composed of Q5 and R15 limits the automatic sweep time to about 1.5 milliseconds per division.

Xtal Resolution Bandwidth Control (B)

When the RESOLUTION BW switch selects a crystal filtered bandwidth (≤30 kHz), bandwidth control line BW5 is open and pulled to −0.5V by Q12 and Q10 in the Xtal PIN Driver Buffer (block D). As a result, four simultaneous changes occur in the analyzer: the crystal poles on the Bandwidth Filter assemblies are activated, the LC poles are disabled, the crystal bandwidth-control current is established, and the automatic sweep time is scaled for the crystal bandwidths.

Control line BW5, from the RESOLUTION BW switch, is routed to the Bandwidth Filter assemblies (A11 and A13) where it activates the crystal filter poles. (Refer to Bandwidth Filter Assembly No. 1 All, Circuit Description and Schematic.) It reverse biases A11/A12CR2 (block D) and A11/A13CR13 (block G). At the same time, A11/A13Q3 and A11/A13CR8 (block D), and A11/A13Q6 and A11/A13CR15 (block G) are turned on.

The LC poles on the Bandwidth Filter assemblies are disabled by a positive voltage on the BW7 control line. Voltage for BW7 is generated in the LC PIN Driver Buffer (block C) on the Sweep Generator/Bandwidth Control Assembly A9. Control line BW5 turns A11/A13Q22 off, allowing BW7 to be pulled to a level greater than +10V by A11/A13CR17 and A11/A13R105. This turns off the LC filter sections.

Crystal filter bandwidth is determined by the current on BW6. Transistor Q13 in the Xtal PIN Driver Buffer (block D) is turned off, allowing Q14 to establish the bandwidth control current. Depending on the setting of the RESOLUTION BW switch, one of the bandwidth control lines (BW1 through BW3) is at +15V while the remaining two are open and pulled to a negative voltage. The positive voltage turns on one of the transistor switches in the Xtal Resolution Bandwidth Control (Q42, Q44, or Q46 in block B). The current on BW6 is now established by one of the factory selected resistors, R109, R110, or R111, and the setting of R72 (the crystal bandwidth adjustment, block D). When the 30 kHz bandwidth is selected, no current is drawn through Q14 and the bandwidth-control PIN diodes (A11/A13CR4 and A11/A13CR12 on the Bandwidth Filter assemblies) are off.

The automatic sweep time (AST) is determined by combinations of resistors switched into the current source circuit by front panel settings. (See the Current Source circuit description.) These resistors are located in blocks A, F, 0 , and the VIDEO FILTER switch A2S2. The contribution of the RESOLUTION BW occurs in the LC Resolution Bandwidth Control (block A). Resistors R117, R119, R121, and R122 are switched into the AST circuit by 4 31, Q26, Q27, and Q28, respectively, when the proper control line is activated. Control lines BW2 through BW4 and the noise measure position of the VIDEO FILTER switch apply +15V to their respective control lines. The same lines are used to control sweep times in both crystal and LC modes. Since the same resistors are used to establish the automatic sweep time for both crystal and LC modes, scaling is necessary. To scale the sweep time, Q24 in block A switches R75 in or out of the AST circuit. During crystal filter operation, BW5 turns Q24 off and removes R75 from the circuit, allowing a longer sweep time.

LC Resolution Bandwidth Control (A)

When an LC filtered bandwidth ($\geq$ 100 kHz) is selected, control line BW5 is pulled to +15V by the RESOLUTION BW switch. This results in four simultaneous changes in the analyzer: the LC poles on the Bandwidth Filter No. 1 and No. 2 Assemblies A11 and A13 are activated, the crystal poles are disabled, the LC bandwidth-control current is established, and the automatic sweep time is scaled for LC bandwidths.

With +15V routed to the Bandwidth Filter assemblies by BW5, A11/A13Q3, A11/A13Q6, A11/A13CR8, and A11/A13CR15 are turned off and A11/A13CR2 and A11/A13CR13 are on. (Refer to Bandwidth Filter Assembly No. 1 A11, Circuit Description and Schematic.) This blocks any signal from passing through the crystal filter sections. Transistor Q13 (on the Sweep Generator/Bandwidth Control Assembly A9, block D) turns on and control line BW6 is pulled to −4V, which further inhibits the crystal filters.

The defeat of the crystal filter poles and the application of bandwidth-control current on the BW7 line activates the LC filter sections. The LC bandwidth is controlled by the current through BW7 to the Bandwidth Filter assemblies. Transistor 422, in the LC PIN Driver Buffer (block C), is turned on, allowing the current on BW7 to be controlled by 421. The position of the RESOLUTION BW switch, via BW2 through BW4, turns one of the transistor switches (Q26, Q27, or Q31) in the LC Resolution Bandwidth Control (block A) on. The bandwidth-control current on BW7 is now determined by a factory selected resistor, either R116, R118, or R120, and R85 (LC bandwidth adjustment, block C). If the 100 kHz bandwidth is selected, 422 is turned on, but BW7 is pulled up to greater than +10V through R106. The bandwidth-control PIN diodes (A11/A13CR3 and A11/A13CR11 on the Bandwidth filter assemblies) are reverse biased by BW7.

Automatic sweep time scaling for LC occurs when BW5 turns Q24 (block A) on. This switches R75 into the AST circuit and decreases the sweep time. The effect on the automatic sweep time is determined by the parallel combination of R75 and the resistor (R117, R119, R121, or R122) selected by the active control line.

Video Filter

The video filter comprises control A2R6, RESOLUTION BW switch A2A1S5, and eight capacitors on the Sweep Generator/Bandwidth Control Assembly A9 (blocks A and B). VIDEO FILTER control A2R6 varies the resistance of the RC filtering network that it forms with the video filter capacitor. The RESOLUTION BW setting determines which video filter capacitor will be switched in by the transistor switches (Q41, Q43, Q45, and Q47 in crystal bandwidths, and Q54, Q32, Q30, and Q55 in LC bandwidths). Increased capacitance is switched in to provide increased filtering as the bandwidth narrows.

The output of the Xtal PIN Driver Buffer (BW6) is applied to the bases of Q42, Q44, Q46, and Q47 via CR18 through CR21. This holds the transistors off and prevents the crystal mode, video filter capacitors from being switched into the circuit during LC mode operation. It is not necessary to switch the LC mode video filter capacitors out of the circuit during crystal operation; their values are so much smaller that they are effectively out of the circuit.

Switch A2S2 applies maximum video filtering for noise measurements by turning on Q55, which switches in C28.

Sweep Attenuator (O)

The Sweep Attenuator circuit attenuates the full span sweep (−5V to +5V), before it is applied to the Frequency Control Assembly A7, as a function of the FREQ SPAN/DIV setting. The circuit also varies the automatic sweep time (AST) as a function of the frequency span. Attenuation takes place in the 1-2-5-10 sequence that results in the FREQ SPAN/DIV control sequence. The circuit has two voltage dividers separated by U3, the unity gain sweep buffer. The input divider provides divide-by-two and divide-by-five; the output divider provides divide-by-ten and divide-by-one-hundred.

To select any of the input dividers, +15V is applied to activate the associated control line. For example, if FS3 is activated, Q51 and Q50 turn on and ground R102 and R73. Resistor R102 becomes part of the AST circuit; R73 forms a divider with R70 that results in the ramp voltage being divided by two. The divided ramp is then applied to the sweep buffer.

The dividers at the output of the sweep buffer have reversed control-logic. That is, they are normally connected to +15V by the FREQ SPAN/DIV switch and open (0V) when selected. Transistor Q19 is a gate to drive Q17. When FS4 and FS5 are connected to +15V, Q19 is off. As a result, Q17 is on and opens a path for the sweep buffer's output to P1-12. No attenuation takes place. If either FS4 or FS5 opens, Q17 shuts off. When FS4 opens, Q16 turns on and a divide-by-ten (R81/R82 + R83) is provided. When FS5 opens, Q15 turns on and provides a divide-by-one-hundred (R81 + R82/R83).

Automatic sweep is varied as a function of frequency span by transistors Q53, Q51, Q49, Q29, Q25, and Q23. Transistor A29 is switched on in narrow spans (<1 MHz/div) when the YIG FM coil is swept. All of these transistors act as switches connecting resistors from the AST line to ground. This varies the sweep time. (See the Current Source circuit description.) As the FREQ SPAN/DIV is narrowed, the sweep time is decreased.

Sweep Offset

Transistor Q20 in the sweep attenuator (block O) makes it possible to offset the sweep ramp in response to the position of a start-center (ST-CTR) switch. This capability is not required in the HP 8559A. So, the +15V from the Motherboard Assembly A16 is applied to Q20, holding it off. The circuit is always in the center position.

SWEEP GENERATOR/BANDWIDTH CONTROL ASSEMBLY A9, TROUBLESHOOTING

CAUTION

When making measurements at or near test points, be careful not to short adjacent points or circuit components together.

Auto Scan Time (AST) Accuracy: Observe front panel switch positions to help isolate the problem area. Auto scan time can also be affected by circuits on the Marker Assembly A8 and the VIDEO FILTER control position. If the AST problem is band related, the Marker Assembly A8 is the most probable cause. If the AST problem is bandwidth or scanwidth related, the most probable cause is the Sweep Generator/Bandwidth Control Assembly A9. The greater the load placed on the AST line, the greater the current demand. The greater the current demand, the faster the sweep rate.

Failure to Sweep: Check the +10V (nominal) supply. If it is greater than +11.5V, the sweep will be inhibited.

If the +10V (nominal) supply is low, check the Bandwidth Filter No. 1 and No. 2 Assemblies A11 and A13 for a shorted crystal filter pole. Test from A11/A13TP2 to ground and A11/A13TP5 to ground with an ohmmeter to locate the possible short.

Begin troubleshooting the sweep generator by determining if the Current Source (block F) is operating and if the Comparator (block H) will toggle.

The inability to trigger retrace, during the beginning of a sweep, is commonly caused by the failure of U1 or CR7.

TABLE 8-6. SWEEP GENERATOR/BANDWIDTH CONTROL ASSEMBLY A9, REPLACEABLE PARTS (1 OF 4)

Reference Designation	HP Part Number	CD	Qty	Description	Mfr Code	Mfr Part Number
A9	08559-60083	1	1	SWEEP GENERATOR/BANDWIDTH CONTROL ASSY	28480	08559-60083
A9C1	0180-0197	8	5	CAPACITOR-FXD 2.2UF+-10% 20VDC TA	56289	150D225X9020A2
A9C2	0160-3456	6	3	CAPACITOR-FXD 1000PF +-10% 1KVDC CER	28480	0160-3456
A9C3	0160-3402	2	1	CAPACITOR-FXD 1UF +-5% 50VDC MET-POLYC	28480	0160-3402
A9C4	0160-3009	5	1	CAPACITOR-FXD 982PF +-1% 100VDC MICA	28480	0160-3009
A9C5	0180-0197	8		CAPACITOR-FXD 2.2UF+-10% 20VDC TA	56289	150D225X9020A2
A9C6	0160-3466	8	2	CAPACITOR-FXD 100PF +-10% 1KVDC CER	28480	0160-3466
A9C7	0160-2150	5	1	CAPACITOR-FXD 33PF +-5% 300VDC MICA	28480	0160-2150
A9C8	0160-3466	8		CAPACITOR-FXD 100PF +-10% 1KVDC CER	28480	0160-3466
A9C9	0160-2257	3	1	CAPACITOR-FXD 10PF +-5% 500VDC CER 0+-60	28480	0160-2257
A9C10	0170-0066	9	1	CAPACITOR-FXD .022UF + 10% 200VDC POLYE	28480	0170-0066
A9C11	0160-3456	6		CAPACITOR-FXD 1000PF +-10% 1KVDC CER	28480	0160-3456
A9C12	0160-3094	0	2	CAPACITOR-FXD .1UF +-10% 100VDC CER	28480	0160-3094
A9C13	0160-3456	6		CAPACITOR-FXD 1000PF +-10% 1KVDC CER	28480	0160-3456
A9C14	0140-0192	9	1	CAPACITOR-FXD 68PF + 5% 300VDC MICA	72136	DM15E680J0300WV1CR
A9C15	0160-3094	8		CAPACITOR-FXD .1UF +-10% 100VDC CER	28480	0160-3094
A9C16	0160-4297	5	2	CAPACITOR-FXD .022UF +80-20% 100VDC CER	56289	C023F101H2237S22-CDH
A9C17	0160-4297	5		CAPACITOR-FXD .022UF +80-20% 100VDC CER	56289	C023F101H2237S22-CDH
A9C19	0180-0197	8		CAPACITOR-FXD 2.2UF+-10% 20VDC TA	56289	150D225X9020A2
A9C20	0180-0197	8		CAPACITOR-FXD 2.2UF+-10% 20VDC TA	56289	150D225X9020A2
A9C21	0160-0869	3	1	CAPACITOR-FXD .33UF +-10% 80VDC POLYE	28480	0160-0869
A9C22	0160-0168	1	1	CAPACTTOR-FXD .1UF +-10% 200VDC POLYE	28480	0160-0168
A9C23	0160-0163	6	1	CAPACITOR-FXD .033UF +-10% 200VDC POLYE	28480	0160-0163
A9C24	0160-0161	4	1	CAPACITOR FXD .01UF +-10% 200VDC POLYE	28480	0160-0161
A9C25	0160-0155	6	1	CAPACITOR FXD 3300PF +-10% 200VDC POLYE	28480	0160-0155
A9C26	0160-0945	2	1	CAPACITOR FXD 910PF + 5% 100VDC MICA	28480	0160-0945
A9C27	0160-0134	1	1	CAPACITOR-FXD 220PF +-5% 300VDC MICA	28480	0160-0134
A9C28	0180-0197	8		CAPACITOR-FXD 2.2UF+-10% 20VDC TA	56289	150D225X9020A2
A9CR1	1901-0050	3	25	DIODE-SWITCHING 80V 200MA 2NS DO-35	28480	1901-0050
A9CR2	1901-0376	6	1	DIODE-GEN PRP 35V 50MA DO-35	28480	1901-0376
A9CR3	1901-0050	3		DIODE-SWITCHING 80V 200MA 2NS DO-35	28480	1901-0050
A9CR4	1901-0050	3		DIODC SWITCHING 80V 200MA 7NS DO-35	28480	1901-0050
A9CR5	1901-0050	3		DIODE SWITCHING 80V 200MA 2NS DO 35	28480	1901-0050
A9CR6	1901-0050	3		DIODE SWITCHING 80V 200MA 2NS DO 35	28480	1901-0050
A9CR7	1901-0539	3	1	DIODE SM SIG SCIOTTKY	28480	1901-0539
A9CR8	1901-0050	3		DIODE SWITCHING 80V 200MA 2NS DO 35	28480	1901-0050
A9CR9	1901-0050	3		DIODE SWITCHING OOV 200MA 2NS DO 35	28480	1901-0050
A9CR10	1901-0050	3		DIODE-SWITCHING 80V 200MA 2NS DO-35	28480	1901-0050
A9CR11	1901-0050	3		DIODE-SWITCHING 80V 200MA 2NS DO-35	28480	1901-0050
A9CR12	1901-0050	3		DIODE-SWITCHING 80V 200MA 2NS DO-35	28480	1901-0050
A9CR13	1901-0050	3		DIODE-SWITCHING 80V 200MA 2NS DO-35	28480	1901-0050
A9CR14	1901-0050	3		DIODE-SWITCHING 80V 200MA 2NS DO-35	28480	1901-0050
A9CR15	1901-0050	3		DIODE-SWITCHING 80V 200MA 2NS DO-35	28480	1901-0050
A9CR16	1901-0050	3		DIODE SWITCHING ROV 200MA 2NS DO-35	28480	1901-0050
A9CR17	1901-0050	3		DIODE SWITCHING 80V 200MA 2NS DO-35	28480	1901-0050
A9CR18	1901-0050	3		DIODE SWITCHING 80V 200MA 2NS DO-35	28480	1901-0050
A9CR19	1901-0050	3		DIODF SWITCHING 30V 200MA 2NS GO-35	28480	1901-0050
A9CR20	1901-0050	3		DIODC SWITCHING 80V 200MA 2NS DII-35	28480	1901-0050
A9CR21	1901-0050	3		DIODE SWITCHING 80V 200MA 2NS DO-35	28480	1901-0050
A9CR23	1901-0050	3		DIODC-SWITCHING 80V 200MA 2NS DO-35	28480	1901-0050
A9CR25	1901-0050	3		DIODE-SWITCHING 80V 200MA 2NS DO-35	28480	1901-0050
A9CR26	1901-0050	3		DIODE SWITCHING 80V 200MA 2NS DO-35	28480	1901-0050
A9CR27	1901-0050	3		DIODE SWITCHING 80V 200MA 2NS DO-35	28480	1901-0050
A9CR28	1901-0050	3		DIODE-SWITCHING 80V 200MA 2NS DO-35	28480	1901-0050
A9CR29	1901-0050	3		DIODC SWITCHING 80V 200MA 2NS DO-35	28480	1901-0050
A9Q1	1854-0637	1	1	TRANSISTOR NPN 2N2219A SI TO-5 PD=800MW	01295	2N2219A
A9Q2	1854-0071	7	32	TRANSISTOR NPN SI PD=300MW FT=200MHZ	28480	1854-0071
A9Q3	1855-0082	2	7	TRANSISTOR J-FET P-CHAN D MODE SI	28480	1855-0082
A9Q4	1855-0082	2		TRANSISTOR J FCT P-CHAN D-RODE SI	28480	1855-0082
A9Q5	1853-0020	4	6	TRANSISTOR PNP SI PD=300MW FT=150MHZ	28480	1853-0020
A9Q6	1854-0071	7		TRANSISTOR NPN SI PD=300MW FT=200MHZ	28480	1854-0071
A9Q7	1854-0071	7		TRANSISTOR NPN SI PD=300MW FT=200MHZ	28480	1854-0071
A9Q8	1853-0316	1	1	TRANSISTOR-DUAL PNP PD=500MW	28480	1853-0316
A9Q9	1854-0071	7		TRANSISTOR NPN SI PD=300MW FT=200MHZ	28480	1854-0071
A9Q10	1854-0071	7		TRANSISTOR NPN SI PD=300MW FT=200MHZ	28480	1854-0071
A9Q11	1855-0417	7	2	TRANS■STOR J-FET N-CHAN D MODE TO 18 SI	28480	1855-0417
A9Q12	1853-0020	4		TRANSISTOR PNP SI PD=300MW FT=150MHZ	28480	1853-0020
A9Q13	1854-0071	7		TRANSISTOR NPN SI PD=300MW FT=200MHZ	28480	1854-0071
A9Q14	1854-0404	0	5	TRANSISTOR NPN 71 TO-18 PD=360MW	28480	1854-0404
A9Q15	1855-0082	2		TRANSISTOR J-FET P-CHAN D-MODE SI	28480	1855-0082

TABLE 8-6. SWEEP GENERATOR/BANDWIDTH CONTROL ASSEMBLY A9, REPLACEABLE PARTS (2 OF 4)

Reference Designation	HP Part Number	C D	Qty	Description	Mfr Code	Mfr Part Number
A9Q16	1855-0382	2		TRANSISTOR J-FET P-CHAN D-MODE SI	.0480	1855-0382
A9Q17	1855-0082	2		TRANSISTOR J-FET P-CHAN D-MODE SI	28480	1855-0082
A9Q18	1854-0404	0		TRANSISTOR NPN SI TO-18 PD=360MW	.8480	1854-0404
A9Q19	1853-0020	4		TRANSISTOR PNP SI PD=300MW FT=150MHZ	28480	1853-0020
A9Q20	1853-0320	4		TRANSISTOR PNP SI PD=300MW FT=150MHZ	8480	1853-0320
A9Q21	1854-0404	0		TRANSISTOR NPN SI TO-18 PD=360MW	28480	1854-0404
A9Q22	1854-0071	7		TRANSISTOR NPN SI PD=300MW FT=200MHZ	28480	1854-0071
A9Q23	1855-0082	2		TRANSISTOR J-FET P-CHAN D-MODE SI	28480	1855-0082
A9Q24	1854-0071	7		TRANSISTOR NPN SI PD=300MW FT=200MHZ	.8480	1854-0071
A9Q25	1855-0082	2		TRANSISTOR J-FET P-CHAN D-MODE SI	28480	1855-0082
A9Q26	1854-0071	7		TRANSISTOR NPN SI PD=300MW FT=200MHZ	.8480	1854-0071
A9Q27	1854-0071	7		TRANSISTOR NPN SI PD=300MW FT=200MHZ	28480	1854-0071
A9Q28	1854-0071	7		TRANSISTOR NPN SI PD=300MW FT=200MHZ	.8480	1854-0071
A9Q29	1855-0414	4	2	TRANSISTOR J-FET 2N4393 N-CHAN D-MODE	04713	2N4393
A9Q30	1854-0071	7		TRANSISTOR NPN SI PD=300MW FT=200MHZ	28480	1854-0071
A9Q31	1854-0071	7		TRANSISTOR NPN SI PD=300MW FT=200MHZ	28480	1854-0071
A9Q32	1854-0071	7		TRANSISTOR NPN SI PD=300MW FT=200MHZ	28480	1854-0071
A9Q33	1854-0404	0		TRANSISTOR NPN SI TO-18 PD=360MW	28480	1854-0404
A9Q34	1854-0071	7		TRANSISTOR NPN SI PD=300MW FT=200MHZ	8480	1854-0071
A9Q35	1854-0071	7		TRANSISTOR NPN SI PD=300MW FT=200MHZ	28480	1854-0071
A9Q36	1853-0020	4		TRANSISTOR PNP SI PD=300MW FT=150MHZ	.8480	1853-0020
A9Q37	1855-0417	7		TRANSISTOR J-FET N-CHAN D MODE TO-10 SI	28480	1855-0417
A9Q38	1854-0404	0		TRANSISTOR NPN SI TO-18 PD=360MW	28480	1854-0404
A9Q39	1854-0071	7		TRANSISTOR NPN SI PD=300MW FT=200MHZ	28480	1854-0071
A9Q40	1853-0320	4		TRANSISTOR PNP SI PD=300MW FT=150MHZ	28480	1853-0020
A9Q41	1854-0071	7		TRANSISTOR NI'N SI PD=300MW FT=200MHZ	111400	1854-0071
A9Q42	1854-0071	7		TRANSISTOR NPN SI PD=300MW FT=200MHZ	28480	1854-0071
A9Q43	1854-0071	7		TRANSISTOR NI'N ST PD 300MW FT=200MHZ	28480	1854-0071
A9Q44	1854-0071	7		TRANSISTOR NPN SI PD=300MW FT=200MHZ	28480	1854-0071
A9Q45	1854-0071	7		TRANSISTOR NI'N ST PD 300MW FT=200MHZ	28480	1854-0071
A9Q46	1854-0071	7		TRANSISTOR NPN SI PD=300MW FT=200MHZ	.8480	1854-0071
A9Q47	1854-0071	7		TRANSISTOR NPN SI PD=300MW FT=200MHZ	28480	1854-0071
A9Q48	1854-0071	7		TRANSISTOR NPN SI PD=300MW FT=200MHZ	28480	1854-0071
A9Q49	1854-0071	7		TRANSISTOR NPN SI PD=300MW FT=200MHZ	28480	1854-0071
A9Q50	1854-0071	7		TRANSISTOR NPN SI PD=300MW FT 200MHZ	28480	1854-0071
A9Q51	1854-0071	7		TRANSISTOR NPN ST PD 300MW FT=200MHZ	28480	1854-0071
A9Q52	1854-0071	7		TRANSISTOR NPN SI PD=300MW FT=200MHZ	28480	1854-0071
A9Q53	1854-0071	7		TRANSISTOR NPN SI PD=300MW FT=200MHZ	28480	1854-0071
A9Q54	1854-0071	7		TRANSISTOR NPN SI PD=300MW FT=200MHZ	28480	1854-0071
A9Q55	1854-0071	7		TRANSISTOR NPN ST PD=300MW FT=200MHZ	28480	1854-0071
A9Q56	1855-0414	4		TRANSISTOR J-FET 2N4393 N-CHAN D-MODE	04713	2N4393
A9R1	0698-3450	9	1	RESISTOR 42.2K 1% .125W F TC=0+-100	24546	C4-1/8-T0-4222-F
A9R3	0757-0279	0	4	RESISTOR 3.16K 1% .125W F TC=0+-100	24546	C4-1/8-T0-3161-F
A9R4	0757-0419	0	1	RESISTOR 681 1% .125W F TC=0+-100	24546	C4-1/8-T0-681R-F
A9R5	0757-0459	8	4	RESISTOR 56.2K 1% .125W F TC=0+-100	24546	C4-1/8-T0-5622-F
A9R6	0698-3152	8	1	RESISTOR 3.48K 1% .125W F TC=0+-100	24546	C4-1/8-T0-3481-F
A9R7	0757-0442	9		RESISTOR 10K 1% 125W F TC=0+-100	24546	C4-1/8-T0-1002-F
A9R8	0757-0442	9		RESISTOR 10K 1% .125W F TC=0+-100	24546	C4-1/8-T0-1002-F
A9R9	0757-0444	1	2	RESISTOR 12 1K 1% 125W F TC=0+-100	24546	C4-1/8-T0-1212-F
A9R10	2100-3109	2	1	RESISTOR TRMR 2K 10% C SIDE ADJ 17 TRN	02111	43P202
A9R11	0698-3457	6		RCSISTOR 316K 1% 125W F TC=0+ 100	28480	0698-3457
A9R12	0698-3446	3	1	RESISTOR 383 1% .125W F TC=0+-100	24546	C4-1/8-T0-383R-F
A9R13	2100-3052	4	1	RESISTOR-TRMR 50 10% C SIDE ADJ 17-TRN	02111	43P500
A9R14	0698-3442	9	1	RESISTOR 237 1% .125W F TC=0+-100	24546	C4-1/8-T0-237R-F
A9R15	0757-0424	7	1	RESISTOR 1.1K 1% .125W F TC=0+-100	24546	C4-1/8-T0-1101-F
A9R16	0757-0279	0		RES▮STOR 3.16K 1% .125W F TC=0+-100	24546	C4-1/8-T0-3161-F
A9R17	0698-3444	1	1	RESISTOR 316 1% .125W F TC=0+-100	24546	C4-1/8-T0-316R-F
A9R18	0757-0280	3	1	RESISTOR 1K 1% .125W F TC=0+-100	24546	C4-1/8-T0-1001-F
A9R19	0757-0346	2	2	RESISTOR 10 1% .125W F TC=0+-100	24546	C4-1/8-T0-10R0-F
A9R20	0757-0465	6	11	RCSISTOR 100K 1% .125W F TC=0+-100	24546	C4-1/8-T0-1003-F
A9R21	0698-3451	0	2	RESISTOR 133K 1% .125W F TC=0+-100	24546	C4-1/8-T0-1333-F
A9R22	0757-0459	8		RESISTOR 56.2K 1% .125W F TC=0+-100	24546	C4-1/8-T0-5622-F
A9R23	0698-7421	2	3	RES▮STOR 40K .25% .125W F TC=0+-100	19701	MF4C1/8-T0-4002-C
A9R24	0698-3194	8	3	RCSISTOR 20K .25% .125W F TC=0+-50	03888	PME55-1/8-T2-2002-C
A9R25	0698-7794	2	3	RCSISTOR 10K .25% .125W F TC=0+-100	19731	MF4C1/8-T0-1002-C
A9R26	0757-0289	2		RESISTOR 13.3K 1% .125W F TC=0+-100	19701	MF4C1/8-T0-1332-F
A9R27	0757-0199	3	6	RESISTOR 21.5K 1% .125W F TC=0+-100	24546	C4-1/8-T0-2152-F
A9R28	0757-0465	6		RESISTOR 100K 1% .125W F TC=0+-100	24546	C4-1/8-T0-1003-F
A9R29	0698-6360	6	5	RESISTOR 10K .1% .125W F TC=0+-25	28480	0698-6360
A9R30	0698-3934	4	1	RCSISTOR 42.18K .1% .125W F TC=0+-25	20480	0698-3934
A9R31	0698-7794	2		RESISTOR 10K .25% .125W F TC=0+-100	19701	MF4C1/8-T0-1002-C
A9R32	0683-3355	2	3	RCSISTOR 3.3M 5% .25W FC TC=-900/+1100	01121	CB3355
A9R33	0683-3355	2		RESISTOR 3.3M 5% .25W FC TC=-900/+1100	01121	CB3355
A9R34	0757-0289	2		RESISTOR 13.3K 1% .125W F TC=0+-100	19701	MF4C1/8-T0-1332-F
A9R35	0757-0442	9		RESISTOR 10K 1% .125W F TC=0+-100	24546	C4-1/8-T0-1002-F
A9R36	0757-0465	6		RESISTOR 100K 1% .125W F TC=0+-100	24546	C4-1/8-T0-1003-F

TABLE 8-6. SWEEP GENERATOR/BANDWIDTH CONTROL ASSEMBLY A9, REPLACEABLE PARTS (3 OF 4)

Reference Designation	HP Part Number	CD	Qty	Description	Mfr Code	Mfr Part Number
A9R37	0757-0465	6		RESISTOR 100K 1% .125W F TC=0+-100	24546	C4-1/8-T0-1003-F
A9R38	0757-0458	7		RESISTOR 51.1K 1% .125W F TC=0+-100	24546	C4-1/8-T0-5112-F
A9R39	0698-6360	6		RESISTOR 10K .1% .125W F TC=0+-25	28480	0698-6360
A9R40	0757-0442	9		RESISTOR 10K 1% .125W F TC=0+-100	24546	C4-1/8-T0-1002-F
A9R41	0698-3160	8	3	RESISTOR 31.6K 1% .125W F TC=0+-100	24546	C4-1/8-T0-3162-F
A9R42*	0698-3935	5	1	RESISTOR 4.946K .1% .125W F TC=0+-25	28480	0698-3935
A9R43	0698-3160	8		RESISTOR 31.6K 1% .125W F TC=0+-100	24546	C4-1/8-T0-3162-F
A9R44	0698-3260	9	2	RESISTOR 464K 1% .125W F TC=0+-100	28480	0698-3260
A9R45	0757-0465	6		RESISTOR 100K 1% .125W F TC=0+-100	24546	C4-1/8-T0-1003-F
A9R46	0757-0439	4	3	RESISTOR 6.81K 1% .125W F TC=0+-100	24546	C4-1/8-T0-6811-F
A9R47*	0698-4037	0	2	RESISTOR 46.4 1% .125W F TC=0+-100	24546	C4-1/8-T0-46R4-F
A9R48	3603-6845	1	1	RESISTOR 680K 5% .25W FC TC=-800/+900	01121	CB6845
A9R49	0698-3457	6		RESISTOR 316K 1% .125W F TC=0+-100	28480	0698-3457
A9R50	0757-0439	4		RESISTOR 6.81K 1% .125W F TC=0+-100	24546	C4-1/8-T0-6811-F
A9R51	0698-4037	0		RESISTOR 46.4 1% .125W F TC=0+-100	24546	C4-1/8-T0-46R4-F
A9R52	0698-3160	8		RESISTOR 31.6K 1% .125W F TC=0+-100	24546	C4-1/8-T0-3162-F
A9R53	0757-0279	0		RESISTOR 3.16K 1% .125W F TC=0+-100	24546	C4-1/8-T0-3161-F
A9R54	0757-0442	9		RESISTOR 10K 1% .125W F TC=0+-100	24546	C4-1/8-T0-1002-F
A9R55	0757-0464	5	1	RESISTOR 90.9K 1% .125W F TC=0+-100	24546	C4-1/8-T0-9092-F
A9R56	0757-0279	3		RESISTOR 3.16K 1% .125W F TC=0+-100	24546	C4-1/8-T0-3161-F
A9R57	0757-0439	4		RESISTOR 6.81K 1% .125W F TC=0+-100	24546	C4-1/8-T0-6811-F
A9R58	0757-0460	1		RESISTOR 61.9K 1% .125W F TC=0+-100	24546	C4-1/8-T0-6192-F
A9R59	0757-0442	9		RESISTOR 10K 1% .125W F TC=0+-100	24546	C4-1/8-T0-1002-F
A9R60	0757-0442	9		RESISTOR 10K 1% .125W F TC=0+-100	24546	C4-1/8-T0-1002-F
A9R61	0757-0465	6		RESISTOR 100K 1% .125W F TC=0+-100	24546	C4-1/8-T0-1003-F
A9R62	0757-0465	6		RESISTOR 100K 1% .125W F TC=0+-100	24546	C4-1/8-T0-1003-F
A9R64	0757-0465	6		RESISTOR 100K 1% .125W F TC=0+-100	24546	C4-1/8-T0-1003-F
A9R65	0757-0459	8		RESISTOR 56.2K 1% .125W F TC=0+-100	24546	C4-1/8-T0-5622-F
A9R66	0757-0442	9		RESISTOR 10K 1% .125W F TC=0+-100	24546	C4-1/8-T0-1002-F
A9R67	3698-3154	0	1	RESISTOR 4.22K 1% .125W F TC=0+-100	24546	C4-1/8-T0-4221-F
A9R68	0698-3457	6	3	RESISTOR 316K 1% .125W F TC=0+-100	28480	0698-3457
A9R69	0757-0440	7	1	RESISTOR 7.5K 1% .125W F TC=0+-100	24546	C4-1/8-T0-7501-F
A9R70	0698-6360	6		RESISTOR 10K .1% .125W F TC=0+-25	28480	0698-6360
A9R71	0757-0442	9		RESISTOR 10K 1% .125W F TC=0+-100	24546	C4-1/8-T0-1002-F
A9R72	2100-2850	8	2	RESISTOR-TRMR 10K 10% WW SIDE-ADJ 20-TRN	02660	3810P-103
A9R73	0698-6360	6		RESISTOR 10K .1% .125W F TC=0+-25	28480	0698-6360
A9R74	0757-0459	8		RESISTOR 56.2K 1% .125W F TC=0+-100	24546	C4-1/8-T0-5622-F
A9R75	0698-7794	2		RESISTOR 10K .25% .125W F TC=0+-100	19701	MF4C1/8-T0-1002-C
A9R76	0698-3238	1	1	RESISTOR 2.5K .25% .125W F TC=0+-50	28480	0698-3238
A9R77	0757-0465	6		RESISTOR 100K 1% .125W F TC=0+-100	24546	C4-1/8-T0-1003-F
A9R78	0698-8827	4	3	RESISTOR 1M 1% .125W F TC=0+-100	28480	0698-8827
A9R79	0698-8827	4		RESISTOR 1M 1% .125W F TC=0+-100	28480	0698-8827
A9R80	0757-0465	6		RESISTOR 100K 1% .125W F TC=0+-100	24546	C4-1/8-T0-1003-F
A9R81	0698-6360	6		RESISTOR 10K .1% .125W F TC=0+-25	28480	0698-6360
A9R82	0698-6362	8	1	RESISTOR 1K .1% .125W F TC=0+-25	28480	0698-6362
A9R83	0698-7912	6	1	RESISTOR 111.1 .25% .125W F TC=0+-100	19701	MF4C1/8-T0-111R1-C
A9R84	0698-7421	2		RESISTOR 40K .25% .125W F TC=0+-100	19701	MF4C1/8-T0-4002-C
A9R85	2100-2650	9		RESISTOR-TRMR 10K 10% WW SIDE-ADJ 20-TRN	02660	3810P-103
A9R86	0757-0447	4	1	RESISTOR 16.2K 1% .125W F TC=0+-100	24546	C4-1/8-T0-1622-F
A9R87	0757-0461	2	1	RESISTOR 68.1K 1% .125W F TC=0+-100	24546	C4-1/8-T0-6812-F
A9R88	0757-0442	9		RESISTOR 10K 1% .125W F TC=0+-100	24546	C4-1/8-T0-1002-F
A9R89	0757-0442	9		RESISTOR 10K 1% .125W F TC=0+-100	24546	C4-1/8-T0-1002-F
A9R90	0757-0289	2		RESISTOR 13.3K 1% .125W F TC=0+-100	19701	MF4C1/8-T0-1332-F
A9R91	0683-3355	2		RESISTOR 3.3M 5% .25W FC TC=-900/+1100	01121	CB3355
A9R92	0757-0346	2		RESISTOR 10 1% .125W F TC=0+-100	24546	C4-1/8-T0-10R0-F
A9R92	2100-3154	7	1	RESISTOR-TRMR 1K 10% C SIDE-ADJ 17-TRN	32111	43P102
A9R93	0757-0465	6		RESISTOR 100K 1% .125W F TC=0+-100	24546	C4-1/8-T0-1003-F
A9R94	0757-0199	3		RESISTOR 21.5K 1% .125W F TC=0+-100	24546	C4-1/8-T0-2152-F
A9R95	0698-3157	3	1	RESISTOR 19.6K 1% .125W F TC=0+-100	24546	C4-1/8-T0-1962-F
A9R96	0698-3136	8	1	RESISTOR 17.8K 1% .125W F TC=0+-100	24546	C4-1/8-T0-1782-F
A9R97	0757-1094	9	1	RESISTOR 1.47K 1% .125W F TC=0+-100	24546	C4-1/8-T0-1471-F
A9R98	0757-0289	2		RESISTOR 13.3K 1% .125W F TC=0+-100	19701	MF4C1/8-T0-1332-F
A9R99	0757-0199	3		RESISTOR 21.5K 1% .125W F TC=0+-100	24546	C4-1/8-T0-2152-F
A9R101	0757-0199	3		RESISTOR 21.5K 1% .125W F TC=0+-100	24546	C4-1/8-T0-2152-F
A9R102	0698-3451	0		RESISTOR 133K 1% .125W F TC=0+-100	24546	C4-1/8-T0-1333-F
A9R103	0757-0199	3		RESISTOR 21.5K 1% .125W F TC=0+-100	24546	C4-1/8-T0-2152-F
A9R104	0757-0199	3		RESISTOR 21.5K 1% .125W F TC=0+-100	24546	C4-1/8-T0-2152-F
A9R105	0698-0005	0	1	RESISTOR 2.61K 1% .125W F TC=0+-100	24546	C4-1/8-T0-2611-F
A9R106	0698-3260	9		RESISTOR 464K 1% .125W F TC=0+-100	28480	0698-3260
A9R107	0757-0444	1		RESISTOR 12.1K 1% .125W F TC=0+-100	24546	C4-1/8-T0-1212-F
A9R108	0698-3194	8		RESISTOR 20K .25% .125W F TC=0+-50	03888	PME55-1/8-T2-2002-C
A9R109*	0698-3151	7	1	RESISTOR 2.87K 1% .125W F TC=0+-100	24546	C4-1/8-T0-2871-F
A9R110*	0757-0442	9	13	RESISTOR 10K 1% .125W F TC=0+-100	24546	C4-1/8-T0-1002-F
A9R111*	0757-0458	7	2	RESISTOR 51.1K 1% .125W F TC=0+-100	24546	C4-1/8-T0-5112-F
A9R116*	0757-0460	1	2	RESISTOR 61.9K 1% .125W F TC=0+-100	24546	C4-1/8-T0-6192-F
A9R117	0698-7421	2		RESISTOR 40K .25% .125W F TC=0+-100	19701	MF4C1/8-T0-4002-C

TABLE 8-6. SWEEP GENERATOR/BANDWIDTH CONTROL ASSEMBLY A9, REPLACEABLE PARTS (4 OF 4)

Reference Designation	HP Part Number	Qty	Description	Mfr Code	Mfr Part Number
A9R118*	0757-0289		RESISTOR 13.3K 1% .125W F TC=0+-100	19701	MF4C1/8-T0-1332-F
A9R119	0698-3194		RESISTOR 20K .25% .125W F TC=0+-50	03888	PME55-1/8-T2-2002-C
A9R120*	0698-8172	1	RESISTOR 4K .25% .125W F TC=0+-50	19701	MF4C1/8-T2-4001-C
A9R121	0698-7412	1	RESISTOR 13.3K .25% .125W F TC=0+-100	19701	MF4C1/8-T0-1332-C
A9R122	0757-0442		RESISTOR 10K 1% .125W F TC=0+-100	24546	C4-1/8-T0-1002-F
A9R123	0698-8827		RESISTOR 1M 1% .125W F TC=0+-100	28480	0698-8827
A9R124	0757-0289		RESISTOR 13.3K 1% .125W F TC=0+-100	19701	MF4C1/8-T0-1332-F
A9TP1	1251-0600	9	CONNECTOR-SGL CONT PIN .114 MM-BSC SZ SQ	28480	1251-0600
A9TP2	1251-0600		CONNECTOR-SGL CONT PIN 1.14-MM-BSC SZ SQ	28480	1251-0600
A9TP3	1251-0600		CONNECTOR SGL CONT PIN 1.14-MM-BSC-SZ SQ	28480	1251-0600
A9TP4	1251-0600		CONNECTOR SGL CONT PIN .114-MM-BSC-SZ SQ	28480	1251-0600
A9TP5	1251-0600		CONNECTOR SGL CONT PIN .114 MM-BSC-SZ SQ	28480	1251-0600
A9TP6	1251-0600		CONNECTOR-SGL CONT PIN 1.14-MM-BSC-SZ SQ	28480	1251-0600
A9TP7	1251-0600		CONNECTOR-SGL CONT PIN 1.14 MM-BSC-SZ SQ	28480	1251-0600
A9TP8	1251-0600		CONNECTOR-SGL CONT PIN 1.14-MM-BSC SZ SQ	28480	1251-0600
A9TP9	1251-0600		CONNECTOR-SGL CONT PIN 1.14 MM-BSC SZ SQ	28480	1251-0600
A9U1	1820-0223	1	IC OP AMP GP TO 79 PKG	3L585	CA301AT
A9U2	1826-0092	1	LT OP AMP GP DUAL TO-99 PKG	28480	1826-0092
A9U3	1826-1358	1	IC OP AMP GP 8-TO 99 PKG	28480	1826-1358
A9U4	1810-0212	3	NETWORK-RES 16-DIP22.0K OHM X 8	01121	316R223
A9U5	1810-0212		NETWORK-RES 16-DIP22.0K OHM X 8	01121	316B223
A9U6	1810-0212		NETWORK-RES 16-DIP22.0K OHM X 8	01121	316R223
A9U7	1810-0207	1	NETWORK-RES 8-SIP22.0K OHM X 7	01121	208A223
A9VR1	1902-0025	1	DIODE-ZNR 10V 5% DO-35 PD=.4W TC=+.06%	28480	1902-0025
A9VR2	1902-3139	2	DIODE-ZNR 8.25V 5% DO-35 PD=.4W	28480	1902-3139
A9VR3	1902-0049	1	DIODE ZNP 6 19V 5% DI1 35 PD=.4W	28480	1902-0049
A9VR4	1902-3139		DIODE ZNR 0 25V 5%00 35 PD=.4W	28480	1902-3139
A9VR5	1902-0041	1	DIODE ZNP 5 11V 5% DO 35 PD=.4W	28480	1902-0041
			A9 MISCELLANEOUS PARTS		
	0403-0026	1	PLUG-HOLE BDR HD FOR .187 D HOLE NYL	02768	207-120241-03-0101
	1230-0173	1	INSULATOR-XSTR DAP GL	28480	1230-0173
	2200-0107	1	SCREW MACH 4 40 .375 LG PAN HD POZI	28480	2200-0107

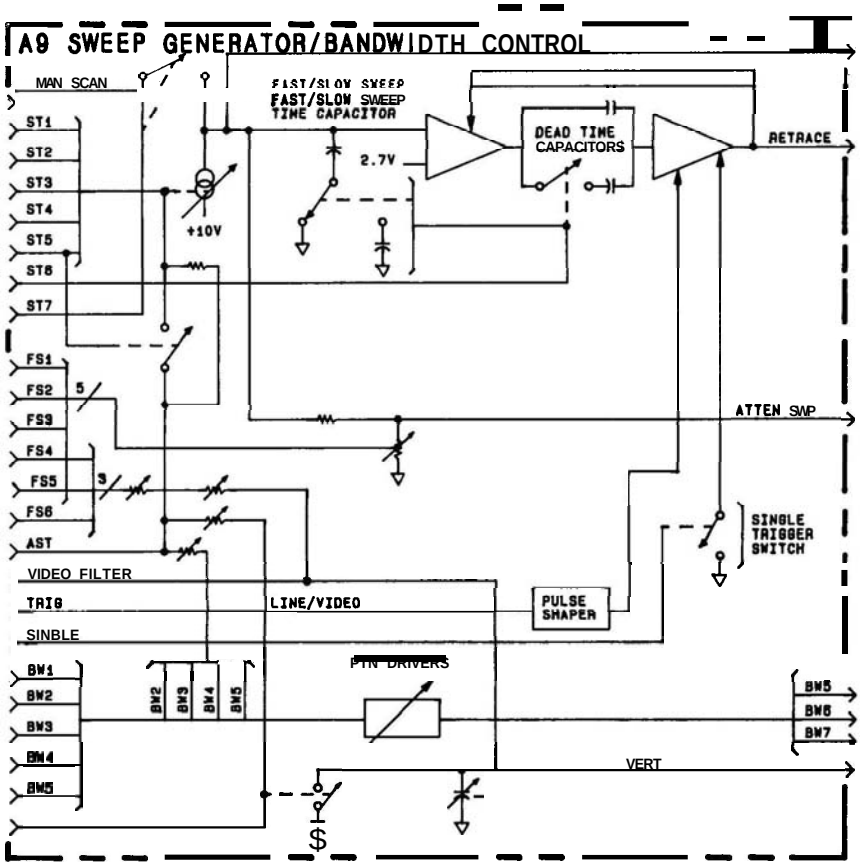

FIGURE 838. SWEEP GENERATOR/BANDWIDTH CONTROL ASSEMBLY A9, BLOCK DIAGRAM

A9
SWEEP GENERATOR/BANDWIDTH CONTROL ASSEMBLY

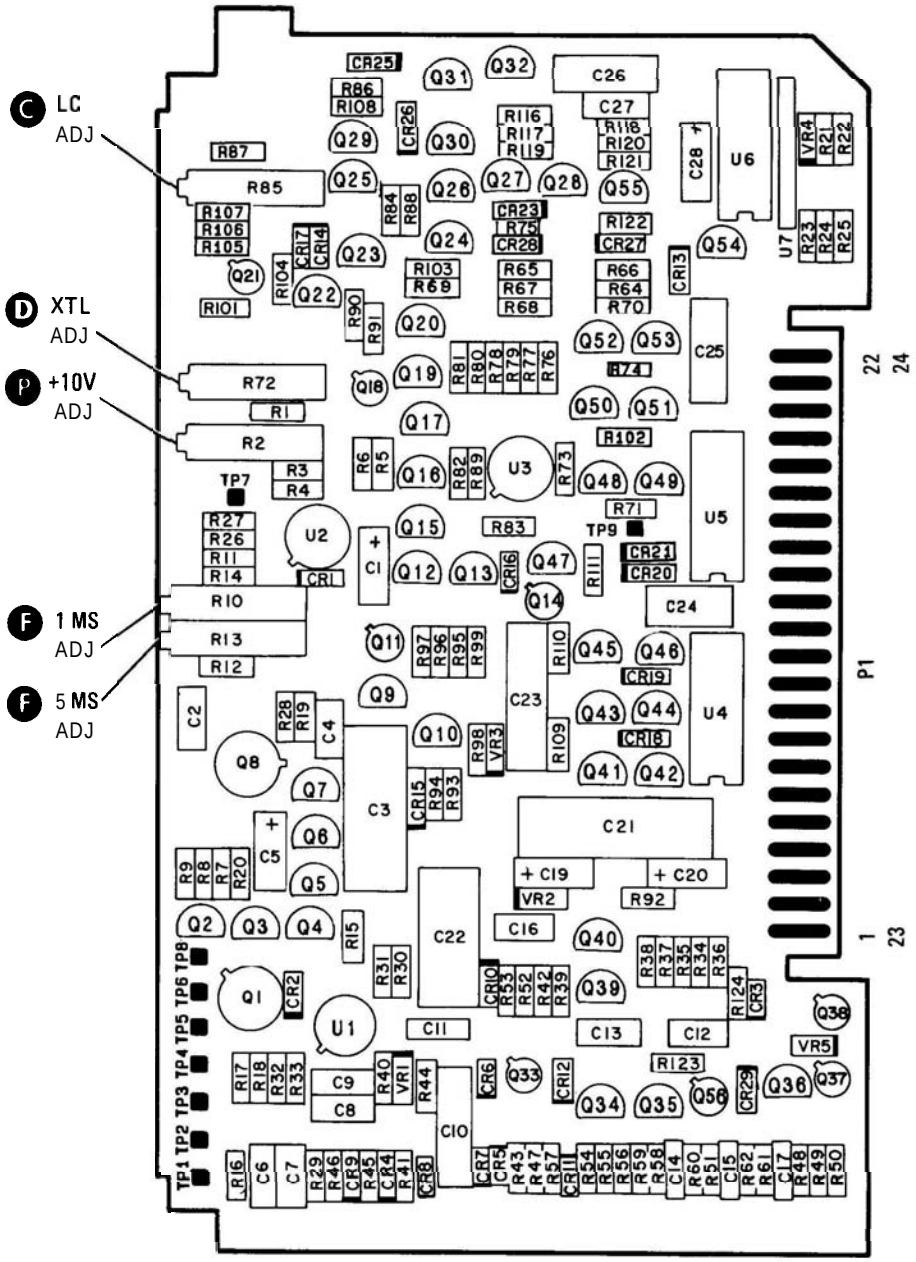

FIGURE 8-39. SWEEP GENERATOR/BANDWIDTH CONTROL ASSEMBLY A9, COMPONENT LOCATIONS

A9 SWEEP GENERATOR/BAND WIDTH CONTROL ASSEMBLY 08559-60083 (1 OF 2)

P1

P/N	SIGNAL	TO/FROM	FUNCTION BLOCK
1 23	RETRACE BLANK TRIG	A15P1 19 A25A4	L L
2 24	SYNC SINGLE	A25A4 A25A4	M M
3 25	ST1 MAN SWEEP	A25J3 A25A4	E E
4 26	VERT -12.6V	A25P5 A1,2B REAR PANEL	E O
5 27	GND	A16	O
6 28	+15V	REAR PANEL P1 29	O
7 29	+10V NOM	A11, A12, A13 P1 29	O
8 30	BW1 BW5	A25J5 A25J5	A A
9 31	BW2 BW6	A25J5 A11,A13 P1 31	A O
10 32	BW3 BW7	A25J5 A11,A13 P1 32	A C
11 33	BW4 NOISE MEASURE	A25J5 A25J1	A A
12 34	ATTEN SWP VIDEO FILTER	A8P1 33 A2H6	O E
13 35	AST GND 1	A8P1 34 A16	A O
14 36	NC F25	NC A25E	NC M
15 37	FS1 F24	A25E A25E	O O
16 38	FS2 F26	A25E A25E	O O
17 39	FS3 SWEEP*	A25K A9P1 40 A9A2	O O
18 40	ST1 SWEEP*	A25J3 A9P1 39	E E
19 41	ST2 ST CTR	A25J3 REAR PANEL P1 29	E O
20 42	ST3 +14.5V	A25J3 A9P1 10	E O
21 43	ST4 GND 2	A25J3 A16	E O
22 44	ST5 ST6	A25J3 A25J3	E N

* SEE NOTE 6

SERIAL PREFIX: 2347A

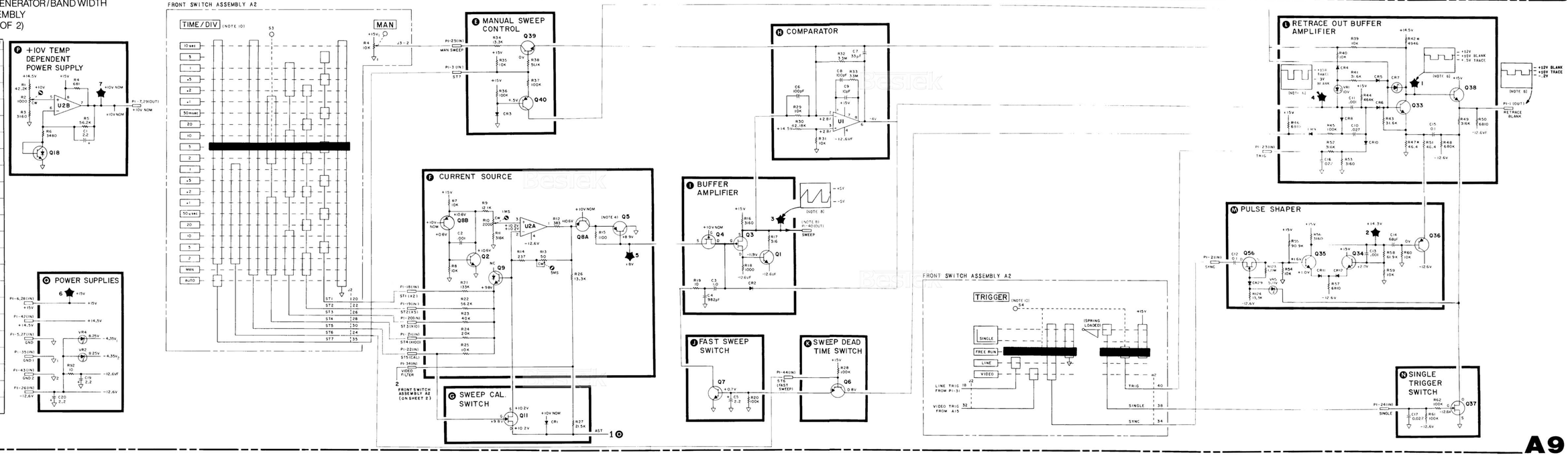

FIGURE 8-40. SWEEP GENERATOR/BANDWIDTH CONTROL ASSEMBLY A9, SCHEMATIC DIAGRAM (1 OF 2)

A9 SWEEP GENERATOR/BAND WIDTH CONTROL ASSEMBLY 08559-60083 (2 OF 2)

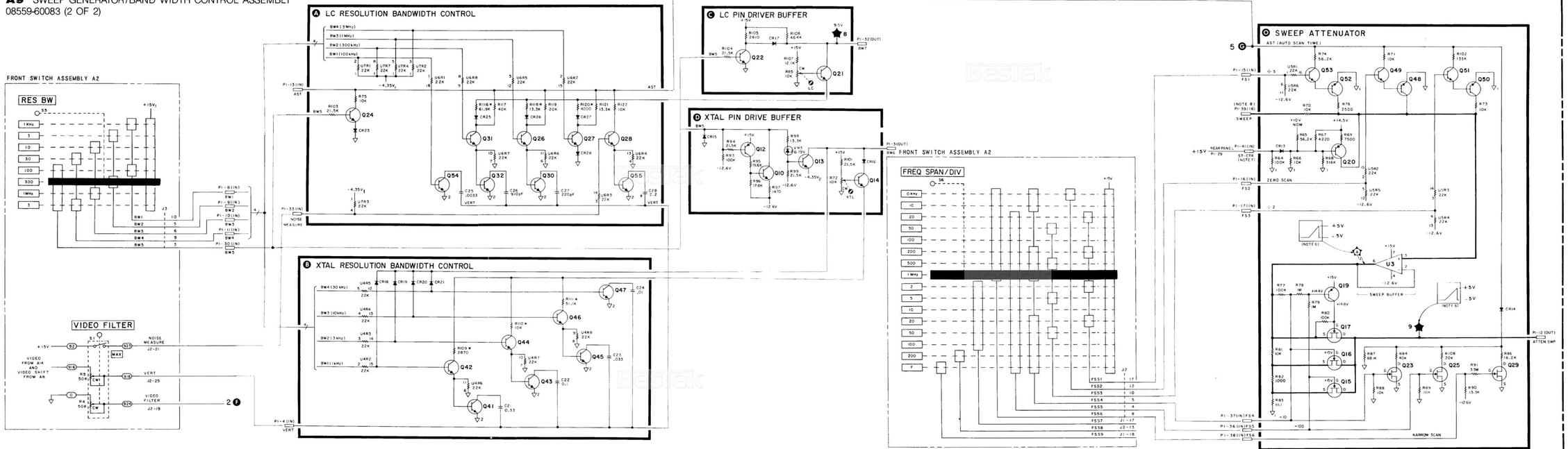

NOTES:

1. REFERENCE DESIGNATORS WITHIN THIS ASSEMBLY ARE ABBREVIATED. PREFIX ABBREVIATION WITH ASSEMBLY NUMBER FOR COMPLETE REFERENCE DESIGNATOR.
2. UNLESS OTHERWISE INDICATED: RESISTANCE IN OHMS (Ω) CAPACITANCE IN MICROFARADS (μF) INDUCTANCE IN MICROHENRIES (μH)
3. * INDICATES FACTORY SELECTED COMPONENT. VALUE SHOWN IS TYPICAL.
4. Q5 IS A 1 mA CURRENT LIMITER.
5. MNEMONIC TABLE

MNEMONIC	DESCRIPTION
AST	AUTO SCAN TIME
ATTENSWP	ATTENUATED SWEEP VOLTAGE
BW1-7	BANDWIDTH CONTROL LINES
FS1-6	FREQUENCY SPAN CONTROL LINES
ST1-7	SCAN TIME CONTROL LINE (ST6 ENABLES FAST SCAN TIMES)

6. THIS WAVEFORM WILL BE PRESENT WHEN THE TRIGGER CONTROL IS IN THE FREE RUN POSITION.
7. THE ST-CTR CIRCUIT IS NOT UTILIZED IN THE 8559. THE CIRCUIT IS ALWAYS IN THE CENTER POSITION.
8. P1-40 IS CONNECTED TO P1-39 ON THE MOTHERBOARD ASSEMBLY (A16).
9. TRANSISTOR PIN CONFIGURATIONS:

Q3, Q4, Q11, Q15, Q16, Q17, Q23, Q25, Q29, Q37, Q56

10. THE SWITCH POSITION SHOWN DIFFERS FROM THE POSITION SHOWN IN FIGURE 8-2. IT IS NECESSARY TO USE THE POSITION SHOWN FOR PROPER WAVE FORM MEASUREMENTS.

FIGURE 8-40. SWEEP GENERATOR/BANDWIDTH CONTROL ASSEMBLY A9, SCHEMATIC DIAGRAM (2 OF 2)

THIRD CONVERTER ASSEMBLY A10, CIRCUIT DESCRIPTION

The Third Converter Assembly A10 contains a 321.4 MHz amplifier followed by a 321.4 MHz bandpass filter, a double balanced mixer, a 21.4 MHz IF preamplifier, a flatness compensation amplifier, and a band conversion loss compensating amplifier. Also included in the Third Converter Assembly A10 are the 35 MHz calibration oscillator and the 300 MHz third local oscillator. The 321.4 MHz signal from the Second Converter Assembly A5 is amplified in the 321.4 MHz amplifier and filtered in the 321.4 MHz bandpass filter before being mixed with the 300 MHz oscillator in the balanced mixer. The output of the mixer is the difference frequency, 21.4 MHz, which is applied to the IF preamplifier where gain is added for the reference level calibration. The signal now passes through two amplifiers to compensate for flatness across the bands and the varying conversion loss of the bands before leaving the Third Converter Assembly A10 at a power level of approximately 0 dBm.

321.4 MHz Amplifier (A)

The 321.4 MHz Amplifier provides a broad-band fixed gain of approximately 18 dB to the incoming 321.4 MHz IF signal. The amplifier is a single-stage common-emitter transistor amplifier whose gain is determined by the high frequency characteristics of Q10, the input matching bandpass filter, and the output matching elements L3 and C8. The 3 dB bandwidth of the input bandpass filter is approximately 500 MHz (with 150 MHz and 650 MHz as the 3 dB points). The filter comprises series capacitor C1, two shunt capacitors, C2, and C3, and series inductors L1 and L2. This bandpass filter attenuates the first and second LO feedthrough to prevent overloading of the amplifier and to minimize spurious responses. Bias to RF amplifier transistor Q10 is provided by Q9 and R3 through L25. Note that Q9 and associated components are RF decoupled by C6 and C7.

321.4 MHz Bandpass Filter (C)

The 321.4 MHz Bandpass Filter rejects the image frequency from the Second Converter Assembly A5 and limits the signal power applied to the mixer in the Third Converter Assembly A10 to a 3 dB bandwidth of about 9 MHz. The filter consists of four LC resonators that are tap-coupled at the input and output of the filter and capacitively coupled between sections by traces on the printed circuit board. The center frequencies of the four poles are adjusted by C9, C10, C11, and C12.

300 MHz Oscillator (D)

Transistor Q1 and associated circuitry form a grounded-base Colpitts oscillator. Direct collector current for Q1 is supplied through L8, whose internal parallel capacitance causes it to self-resonate at 300 MHz. Inductor L12 and capacitors C15, C16, and C17, form a tank circuit that feeds back the collector current of Q1 to its emitter. The frequency of the tank circuit is selected by tuning L12. Power is tapped out of the tank circuit through C18 and L11 and sent to Q2, a buffer amplifier that distributes the power and provides a constant load to the oscillator.

The 300 MHz buffer amplifier isolates the oscillator from the mixer and provides the high-level signal required to drive the mixer. The buffer amplifier is a common-emitter amplifier in which R10 and R11 set the emitter current. Base current is supplied, through self-resonant L9, from R5 and R6. Inductor L13 and capacitor C19 form a matching network that matches the impedance of the signal applied to the mixer's (U1) LO input. A test port is provided, through R4 and J1, to monitor frequency and amplitude of the 300 MHz Oscillator (Third LO). Voltage regulator U2 and its associated circuitry provide a regulated power supply for Q1 and Q2.

Double Balanced Mixer (E)

The Double Balanced Mixer (U1) mixes the 321.4 MHz second IF from the 321.4 MHz Amplifier with the 300 MHz Oscillator. This produces the sum and difference frequencies, 621.4 MHz and 21.4 MHz, that are sent to the IF Preamplifier. The 621.4 MHz mixing product is removed by the matching filter at the input of the IF Preamplifier. Inherent in the double balanced mixer is excellent port-to-port isolation.

IF Preamplifier (F)

The IF Preamplifier voltage gain is provided by Q8 in a common-emitter amplifier configuration. Circuit gain is controlled with collector-to-base feedback through PIN diode CR4. The current through CR4 is adjusted from the front panel by the REF LEVEL CAL control and can vary the gain of the IF Preamplifier over a 10 dB range. Transistor Q7 functions as an emitter follower buffer amplifier.

Flatness Compensation Amplifier (H)

Approximately 20 dB of compensation is available in the Flatness Compensating Amplifier to compensate for small changes in conversion efficiency that occur while sweeping through individual bands. Larger between-band changes in conversion efficiency are compensated for in the Band Conversion Loss Amplifier. The gain of the Flatness Compensation Amplifier is controlled by the Non-Linear Current Source, which draws current through PIN diode CR1. The more current it draws, the lower the gain.

Non-Linear Current Source (G)

The flatness voltage from the Step Gain Assembly A12 sets the base voltage of Q3. Resistors R41, R42, R43, and diode CR5 establish the emitter current and cause it to vary non-linearly in response to changes in the base voltage. This non-linear current drives CR1 and enables the gain of the Flatness Compensation Amplifier to be proportional to the base voltage (and flatness voltage) at about 0.4V per dB of gain.

Band Conversion Loss Compensating Amplifier (I)

The Band Conversion Loss Compensating Amplifier changes gain in discrete steps to compensate for the changes in conversion loss associated with RF section harmonic band switching. In the fundamental mixing bands (Bands 1 and 2), the circuit has unity gain. During second harmonic mixing (Bands 3 and 4), CR2 is forward biased, allowing the gain to be set by R34 as shown in the following equation: Gain = 1 + R32/R34. In the third harmonic mixing mode (Bands 5 and 6), CR3 is forward biased and R36 establishes the gain as follows: Gain = 1 + R32/R36. See Figure 8-41 for a simplified schematic of the Band Conversion Loss Compensating Amplifier gain switching. A gain-versus-band table is shown on the Third Converter Assembly A10 schematic below function block I.

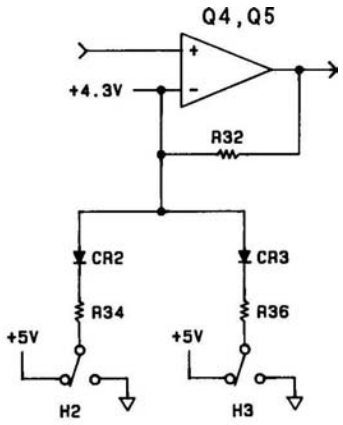

FIGURE 8-41. BAND CONVERSION LOSS COMPENSATION AMPLIFIED GAIN SWITCHING, SIMPLIFIED DIAGRAM

35 MHz Calibration Oscillator (B)

The 35 MHz Calibration Oscillator consists of a differential amplifier formed by Q11 and Q12. A frequency determining tank circuit (L21, C45, and C46) is connected to the base of Q11. The base of Q12 and one side of the tank are at RF ground due to C48. Capacitor C45 temperature-compensates the oscillator; R13 controls the bias current and output amplitude. As the base voltage of Q11 increases, the voltage at the emitters of Q11 and Q12 increases. Since the base of Q12 is effectively at signal ground, the increase in voltage at its emitter reverse biases its emitter-base junction, shutting Q12 off. As Q12 shuts off, the voltage at its collector increases and is fed back in phase to the tank at the base of Q11 through C47. The output is taken from the collector of Q11, filtered to lower harmonic content, and sent to the CAL OUTPUT connector on the front panel.

Power Supplies (J)

Three supply voltages power the Third Converter Assembly A10: +15 VF, −10V, and −10.6 VF. The +15 VF is derived from the +15V supply line and is filtered as it enters the board. The −10V and the −10.6 VF originate from the −12.6V supply line. After filtering, the −12.6V supply feeds a shunt regulator comprising R48, C53, VR1, and VR2 and develops the −10V supply. The filtered −12.6V supply also feeds three-terminal regulator U2, which develops the −10.6 VF supply. Regulator U2 improves isolation of the 300 MHz Oscillator from the supply lines and reduces spurs caused by oscillator harmonics.

THIRD CONVERTER ASSEMBLY A10, TROUBLESHOOTING

CAUTION

Spring contacts are used on the circuit board to ground portions of the circuitry to the aluminum extrusion walls. Care is required when removing the circuit board to prevent damaging these springs. The circuit board must be installed in the extrusion before attempting to adjust the 321.4 MHz Bandpass Filter (block C).

Low Gain: Most common failures are: CR1, CR4, the PIN diodes in the IF preamplifier, and the Flatness Compensation Amplifier.

300 MHz Oscillator off Frequency: Most common failures are C16, C17, and C18.

35 MHz Oscillator off Frequency: Most common failures are C45 and L21.

TABLE 8-7. THIRD CONVERTER ASSEMBLY A10, REPLACEABLE PARTS (1 OF 3)

Reference Designation	HP Part Number	C D	Qty	Description	Mfr Code	Mfr Part Number
A10	08559-60080	8	1	THIRD CONVERTER ASSEMBLY	28480	08559-60080
A10C1	0160-3874	2	1	CAPACITOR-FXD 10PF +-.5PF 200VDC CER	28480	0160-3874
A10C2	0160-3873	1	3	CAPACITOR-FXD 4.7PF +-.5PF 200VDC CER	28480	0160-3873
A10C3	0160-3873	1		CAPACITOR-FXD 4.7PF +-.5PF 200VDC CER	28480	0160-3873
A1114	0160-2055	9	22	CAPACITOR-FXD .01UF +80-20% 100VDC CER	28480	0160-2055
A10C5	0160-3877	5	2	CAPACITOR-FXD 100PF +-20% 200VDC CER	28480	0160-3877
A10C6	0160-3878	6	2	CAPACITOR-FXD 1000PF +-20% 100VDC CER	28480	0160-3878
A10C7	0160-3878	6		CAPACITOR-FXD 1000PF +-20% 100VDC CER	28480	0160-3878
A10C8	0160-3873	1		CAPACITOR-FXD 4.7PF +-.5PF 200VDC CER	28480	0160-3873
A10C9	0121-0453	5	4	CAPACITOR-V TRMR-AIR 1.3-5.4PF 175V	74970	187-0303-125
A1 C13	0121 0453	5		CAPACITOR-V TRMR-AIR 1.3 5.4PF 175V	74970	187-0303-125
A10C11	0121-0453	5		CAPACITOR-V TRMR-AIR 1.3 5.4PF 175V	74970	187-0303-125
A10C12	0121-0453	5		CAPACITOR-V TRMR-AIR 1.3 5.4PF 175V	74970	187-0303-125
A10C13	0160-3456	6	8	CAPACITOR-FXD 1000PF +-10% 1KVDC CER	28480	0160-3456
A10C14	0160-3456	6		CAPACITOR-FXD 1000PF +-10% 1KVDC CER	28480	0160-3456
A10C15	0150-0059	8	1	CAPACITOR-FXD 3.3PF +-.25PF 500VDC CER	28480	0150-0059
A10C16	0160-2254	0	1	CAPACITOR-FXD 7.5PF +-.25PF 500VDC CER	28480	0160-2254
A10C17	0150-0115	7	2	CAPACITOR-FXD 27PF +-10% 500VDC CER	28480	0150-0115
A10C18	0160-3456	6		CAPACITOR-FXD 1000PF +-10% 1KVDC CER	28480	0160-3456
A10C19	0160-3456	6		CAPACITOR-FXD 1000PF +-10% 1KVDC CER	28480	0160-3456
A10C20	0160-3456	6		CAPACITOR-FXD 1000PF +-10% 1KVDC CER	28480	0160-3456
A10C21	0160-3456	6		CAPACITOR-FXD 1000PF +-10% 1KVDC CER	28480	0160-3456
A10C22	0160-3533	0	1	CAPACITOR-FXD 470PF +-5% 300VDC MICA	28480	0160-3533
A10C23	0160-2055	9		CAPACITOR-FXD .01UF +80-20% 100VDC CER	28480	0160-2055
A10C24	0160-2055	9		CAPACITOR-FXD .01UF +80-20% 100VDC CER	28480	0160-2055
A10C25	0160-2055	9		CAPACITOR-FXD .01UF +80-20% 100VDC CER	28480	0160-2055
A10C26	0160-2055	9		CAPACITOR-FXD .01UF +80-20% 100VDC CER	28480	0160-2055
A10C27	0160-2055	9		CAPACITOR-FXD .01UF +80-20% 100VDC CER	28480	0160-2055
A10C28	0160-2055	9		CAPACITOR-FXD .01UF +80-20% 100VDC CER	28480	0160-2055
A10C29	0160-2055	9		CAPACITOR-FXD .01UF +80-20% 100VDC CER	28480	0160-2055
A10C30	0160-2055	9		CAPACITOR-FXD .01UF +80-20% 100VDC CER	28480	0160-2055
A10C31	0160-2055	9		CAPACITOR-FXD .01UF +80-20% 100VDC CER	28480	0160-2055
A10C32	0160-2055	9		CAPACITOR-FXD .01UF +80-20% 100VDC CER	28480	0160-2055
A10C33	0160-2055	9		CAPACITOR-FXD .01UF +80-20% 100VDC CER	28480	0160-2055
A10C34	0160-2055	9		CAPACITOR-FXD .01UF +80-20% 100VDC CER	28480	0160-2055
A10C35	0160-2055	9		CAPACITOR-FXD .01UF +80-20% 100VDC CER	28480	0160-2055
A10C36	0160-2055	9		CAPACITOR-FXD .01UF +80-20% 100VDC CER	28480	0160-2055
A10C37	0160-2055	9		CAPACITOR-FXD .01UF +80-20% 100VDC CER	28480	0160-2055
A10C38	0160-3456	6		CAPACITOR-FXD 1000PF +-10% 1KVDC CER	28480	0160-3456
A10C39	0160-2055	9		CAPACITOR-FXD .01UF +80-20% 100VDC CER	28480	0160-2055
A10C40	0160-3456	6		CAPACITOR-FXD 1000PF +-10% 1KVDC CER	28480	0160-3456
A10C41	0160-2055	9		CAPACITOR-FXD .01UF +80-20% 100VDC CER	28480	0160-2055
A10C42	0160-2055	9		CAPACITOR-FXD .01UF +80-20% 100VDC CER	28480	0160-2055
A10C43	0160-2253	9	1	CAPACITOR-FXD 6.8PF +-.25PF 500VDC CER	28480	0160-2253
A10C44	0160-2055	9		CAPACITOR-FXD .01UF +80-20% 100VDC CER	28480	0160-2055
a10C45	0150-0115	7		CAPACITOR-FXD 27PF +-10% 500VDC CER	28480	0150-0115
A10C46	0121-0105	4	1	CAPACITOR-V TRMR-CER 9-35PF 200V PC-MTG	52763	304324 9/35PF N650
A10C47	0160-3877	5		CAPACITOR-FXD 100PF +-20% 200VDC CER	28480	0160-3877
A10C48	0160-2055	9		CAPACITOR-FXD .01UF +80-20% 100VDC CER	28480	0160-2055
A10C49	0160-2055	9		CAPACITOR-FXD .01UF +80-20% 100VDC CER	28480	0160-2055
A10C50	0160-4457	9	1	CAPACITOR-FXD 51PF +-5% 300VDC MICA	28480	0160-4457
A10C51	0160-2529	2	2	CAPACITOR-FXD 160PF +-2% 300VDC MICA	28480	0160-2529
A10C52	0160-2529	2		CAPACITOR-FXD 160PF +-2% 300VDC MICA	28480	0160-2529
A10C53	0180-0197	8	1	CAPACITOR-FXD 2.2UF+-10% 20VDC TA	56289	150D225X9020A2
A10C54	0140-0199	6	1	CAPACITOR-FXD 240PF +-5% 300VDC MICA	72136	DM15F241J0300WV1CR
A10C55	0160-2205	1	1	CAPACITOR-FXD 120PF +-5% 300VDC MICA	28480	0160-2205
A10C56	0160-4490	0	1	CAPACITOR-FXD 1.0PF +-.25PF 200VDC CER	28480	0160-4490
A10C57	0160-4084	8	1	CAPACITOR-FXD .1UF +-20% 50VDC CER	28480	0160-4084
A10C58	0180-0291	3	1	CAPACITOR-FXD 1UF+-10% 35VDC TA	56289	150D105X9035A2
A10C59	0180-1746	5	1	CAPACITOR-FXD 15UF+-10% 20VDC TA	56289	150D156X9020B2
A10CR1	1901-1070	9	2	DIODE PJN 110V	28480	1901-1070
A10CR2	1901-0050	3	3	DIODE SWITCHING 80V 200MA TNS DO 35	28480	1901-0050
A10CR3	1901-0050	3		DIODE SWITCHING 80V 200MA 2NS DO 35	28480	1901-0050
A10CR4	1901-1070	9		DIODE PIN 110V	28480	1901-1070
A10CR5	1901-0050	3		DIODE SWITCHING 80V 200MA 2NS DO 35	28480	1901-0050
A10E1	9170-0029	3	4	CORE-SHIELDING BEAD	28480	9170-0029
A10E2	9170-0029	3		CORE-SHIELDING BEAD	28480	9170-0029
A10E3	9170-0029	3		CORE-SHIELDING BEAD	28480	9170-0029
A10E4	9170-0029	3		CORE-SHIELDING BEAD	28480	9170-0029
A10J1	1250-0691	7	1	CONNECTOR RF SMA M SGL-HOLE-FR 50-OHM	28480	1250-0691

TABLE 8-7. THIRD CONVERTER ASSEMBLY A10, REPLACEABLE PARTS (2 OF 3)

Reference Designation	HP Part Number	CD	Qty	Description	Mfr Code	Mfr Part Number
A10L1	85680-80009	3		INDUCTOR 35 NH	28480	85680-80009
A10L2	85680-80009	3		INDUCTOR 35 NH	28480	85680-80009
A10L3	9100-2691	4	1	INDUCTOR RF-CH-MLD 50NH 10% .135DX.26LG	28480	9100-2691
A10L4	85660-80002	2	2	COIL TAPPED	28480	85660-80002
A10L5	08559-80012	8	2	COIL FILTER	28480	08559-80012
A10L6	08559-80012	8		COIL FILTER	28480	08559-80012
A10L7	85660-80002	2		COIL TAPPED	28480	85660-80002
A10L8	9100-2256	5	6	INDUCTOR RF-CH-MLD 560NH 10% .105DX.26LG	28480	9100-2256
A10L9	9100-2256	5		INDUCTOR RF-CH-MLD 560NH 10% .105DX.26LG	28480	9100-2256
A10L10	9100-2256	5		INDUCTOR RF-CH-MLD 560NH 10% .105DX.26LG	28480	9100-2256
A10L11	9100-2250	9	1	INDUCTOR RF-CH-MLD 180NH 10% .135DX.26LG	28480	9100-2250
A10L12	08557-80001	3	1	INDUCTOR 1ST CON	28480	08557-80001
A10L13	9100-2256	5		INDUCTOR RF-CH-MLD 560NH 10% .105DX.26LG	28480	9100-2256
A10L14	9100-2256	5		INDUCTOR RF-CH-MLD 560NH 10% .105DX.26LG	28480	9100-2256
A10L15	9100-1619	3	1	INDUCTOR RF-CH-MLD 150NH 20%	28480	9100-1619
A10L16	9140-0111	1	1	INDUCTOR RF-CH-MLD 3.30H 10%	28480	9140-0111
A10L17	9140-0112	2	1	INDUCTOR RF-CH-MLD 4.70H 10%	28480	9140-0112
A10L18	9100-1618	1	1	INDUCTOR RF-CH-MLD 5.60H 10%	28480	9100-1618
A10L19	9100-2247	4	2	INDUCTOR RF-CH-MLD 100NH 10% .135DX.26LG	28480	9100-2247
A10L20	9100-2247	4		INDUCTOR RF-CH-MLD 100NH 10% .105DX.26LG	28480	9100-2247
A10L21	9100-2252	1	1	INDUCTOR RF-CH-MLD 270NH 10% .135DX.26LG	28480	9100-2252
A10L22	9140-0179	1	1	INDUCTOR RF-CH-MLD 22UH 10% .166DX.385LG	28480	9140-0179
A10L23	9100-2256	5		INDUCTOR RF-CH-MLD 560NH 10% .105DX.26LG	28480	9100-2256
A10L24	9100-2251	0	1	INDUCTOR RF-CH-MLD 220NH 10% .105DX.26LG	28480	9100-2251
A10L25	9100-2255	4	1	INDUCTOR RF-CH-MLD 470NH 10% .135DX.26LG	28480	9100-2255
A10L26	9100-0368	6	1	INDUCTOR RF-CH-MLD 330NH 10% .105DX.26LG	28480	9100-0368
A10L27	9100-1613	6	1	INDUCTOR RF-CH-MLD 470NH 20%	28480	9100-1613
A10Q1	1854-0546	1	2	TRANSISTOR NPN SI TO-72 PD=200MW	28480	1854-0546
A10Q2	1854-0247	9	4	TRANSISTOR NPN SI TO 39 PD 1W FT=800MHZ	28480	1854-0247
A10Q3	1854-0023	9	1	TRANSISTOR NPN SI TO 10 PD 360MW	28480	1854-0023
A10Q4	1854-0546	1		TRANSISTOR NPN SI 10 72 PD 200MW	28480	1854-0546
A10Q5	1853-0007	7	1	TRANSISTOR PNP 2N3251 ST TO 18 PD 360MW	04713	2N3251
A10Q6	1854-0247	9		TRANSISTOR NPN SI TO-39 PD=1W FT=800MHZ	28480	1654-0247
A10Q7	1854-0247	9		TRANSISTOR NPN SI TO-39 PD=1W FT=800MHZ	28480	1854-0247
A10Q8	1854-0247	9		TRANSISTOR NPN SI TO-39 PD=1W FT=800MHZ	28480	1954-0247
A10Q9	1853-0451	5	1	TRANSISTOR PNP 2N3799 SI TO-18 PD=360MW	01295	2N3799
A10013	1854-0686	0	1	TRANSISTOR NPN SI TO-72 PD=200MW FT=4GHZ	28480	1854-0686
A10Q11	1854-0019	3	2	TRANSTDTOP NPN ST TO 18 PD 360MW	28480	1854-0019
A10Q12	1854-0319	3		TRANSISTOR NPN SI TO 18 PD=360MW	28480	1654-0319
A10R1	0757-0260	7	1	RESISTOR 5.62K 1% .125W F TC=0+-100	24546	C4-1/8-T0-5621-F
A10R2	0757-3288	1	1	RESISTOR 9.09K 1% .125W F TC=0+-100	19701	MF4C1/8-T0-9091 F
A10R3	0757-0416	7	1	RESISTOR 511 1% .125W F TC=0+-100	24546	C4-1/8-T0-511R-F
A10R4	0698-0082	7	2	RESISTOR 464 1% .125W F TC=0+-100	24546	C4-1/8-T0-4640-F
A10R5	0757-0280	3	2	RESISTOR 1K 1% .125W F TC=0+-100	24546	C4-1/8-T0-1001-F
A10R6	0757-0419	0	1	RESISTOR 681 1% .125W F TC=0+-100	24546	C4-1/8-T0-681R-F
A10R7	0757-0401	0	4	RESISTOR 100 1% .125W F TC=0+-100	24546	C4-1/8-T0-101-F
A10R8	0698-0002	7		RESISTOR 464 1% .125W F TC=0+-100	24546	C4-1/8-T0-4640-F
A10R9	0757-0346	2	5	RESISTOR 10 1% .125W F TC=0+-100	24546	C4-1/8-T0-10R0-F
A10R10	0757-0346	2		RESISTOR 10 1% .125W F TC=0+-100	24546	C4-1/8-T0-10R0-F
A10R11	0757-0401	0		RCSISTOR 100 1% .125W F TC-0+-100	24546	C4-1/8-T0-101-F
A10R12	0698-3155	1	1	RESISTOR 4.64K 1% .125W F TC=0+-100	24546	C4-1/8-T0-4641-F
A10R13	2100-0545	4	1	RESISTOR-TRMR 1K 10% C SIDE ADJ 17 TRN	32997	3292X-1-102
A10R14	0757-0279	0	1	RESISTOR 3.16K 1% 125W F TC=0+ 100	24546	C4-1/8-T0-3161-F
A10R15	0757-0438	3	2	RESISTOR 5 11K 1% .125W F TC=0+-100	24546	C4-1/8-T0-5111-F
A10R16	0698-0085	0	1	RESISTOR 2.61K 1% .125W F TC=0+-100	24546	C4-1/8-T0-2611-F
A10R17	0698-3449	6	1	RESISTOR 20.7K 1% .125W F TC=0+-100	24546	C4-1/8-T0-2072-F
A10R18	0698-3440	7	2	RESISTOR 196 1% 125W F TC=0+-100	24546	C4-1/8-T0-196R-F
A10R19	0698-8821	8	1	RCSISTOR 5.62 1% .125W F TC=0+-100	28480	0698-8821
A10R20	0698-3440	7		RESISTOR 196 1% 125W F TC=0+-100	24546	C4-1/8-T0-196R-F
A10R21	0757-0280	3		RESISTOR 1K 1% .125W F TC=0+-100	24546	C4-1/8-T0-1001-F
A10R22	0757-0346	2		RESISTOR 10 1% .125W F TC=0+-100	24546	C4-1/8-T0-10R0-F
A10R23	0757-0440	7	2	RCSISTOR 7.5K 1% .125W F TC=0+-100	24546	C4-1/8-T0-7501-F
A10R24	0757-0440	7		RESISTOR 7.5K 1% .125W F TC=0+-100	24546	C4-1/8-T0-7501-F
A10R25*	0757-0397	3	1	RESISTOR 68.1 1% .125W F TC=0+-100	24546	C4-1/8-T0-68R1-F
A10R26	0698-3443	0	4	RCSISTOR 287 1% .125W F TC=0+-100	24546	C4-1/8-T0-287R-F
A10R27	0757-0346	2		RCSISTOR 10 1% .125W F TC=0+-100	24546	C4-1/8-T0-10R0-F
A10R28	0757-0442	9	2	RESISTOR 10K 1% .125W F TC=0+-100	24546	C4-1/8-T0-1002-F
A10R29	0757-0438	3		RESISTOR 5.11K 1% .125W F TC=0+-100	24546	C4-1/8-T0-5111-F
A10R30	0757-0346	2		RESISTOR 10 1% .125W F TC=0+-100	24546	C4-1/8-T0-10R0-F
A10R31	0698-3443	0		RESISTOR 287 1% .125W F TC=0+-100	24546	C4-1/8-T0-287R-F
A10R32	0757-0418	9	1	RESISTOR 619 1% .125W F TC=0+-100	24546	C4-1/8-T0-619R-F
A10R33	0698-3444	1	1	RESISTOR 316 1% .125W F TC=0+-100	24546	C4-1/8-T0-316R-F
A10R34	0698-3446	3	1	RESISTOR 383 1% .125W F TC=0+-100	24546	C4-1/8-T0-383R-F
A10R35	0698-3443	0		RESISTOR 287 1% .125W F TC=0+-100	24546	C4-1/8-T0-287R-F

TABLE 8-7. THIRD CONVERTER ASSEMBLY A10, REPLACEABLE PARTS (3 OF 3)

Reference Designation	HP Part Number	CD	Qty	Description	Mfr Code	Mfr Part Number
A10R36	0698-3438	3	1	RESISTOR 147 1% .125W F TC=0+-100	24546	C4-1/8-T0-147R-F
A10R37	0698-3445	2	2	RESISTOR 348 1% .125W F TC=0+-100	24546	C4-1/8-T0-348R-F
A10R38	0757-0442	9		RESISTOR 10K 1% .125W F TC=0+-100	24546	C4-1/8-T0-1002-F
A10R39	0757-0460	1	1	RESISTOR 61.9K 1% .125W F TC=0+-100	24546	C4-1/8-T0-6192-F
A10R40	0757-0401	0		RESISTOR 100 1% .125W F TC=0+-100	24546	C4-1/8-T0-101-F
A10R41	0698-3161	9	2	RESISTOR 38.3K 1% .125W F TC=0+-100	24546	C4-1/8-T0-3832-F
A10R42	0698-3161	9		RESISTOR 38.3K 1% .125W F TC=0+-100	24546	C4-1/8-T0-3832-F
A10R43	0698-3158	4	1	RESISTOR 23.7K 1% .125W F TC=0+-100	24546	C4-1/8-T0-2372-F
A10R44	0698-3132	4	1	RESISTOR 261 1% .125W F TC=0+-100	24546	C4-1/8-T0-2610-F
A10R45	0698-3429	2	1	RESISTOR 19.6 1% .125W F TC=0+-100	03888	PME55-1/8-T0-19R6-F
A10R46	0757-0394	0	1	RESISTOR 51.1 1% .125W F TC=0+-100	24546	C4-1/8-T0-51R1-F
A10R47	0757-0401	0		RESISTOR 100 1% .125W F TC=0+-100	24546	C4-1/8-T0-101-F
A10R48	0757-0400	9	1	RESISTOR 90.9 1% .125W F TC=0+-100	24546	C4-1/8-T0-90R9-F
A10R49	0698-3443	0		RESISTOR 287 1% .125W F TC=0+-100	24546	C4-1/8-T0-287R-F
A10R50	0698-3445	2		RESISTOR 348 1% .125W F TC=0+-100	24546	C4-1/8-T0-348R-F
A10R51	0757-0395	1	1	RESISTOR 56.2 1% .125W F TC=0+-100	24546	C4-1/8-T0-56R2-F
A10R52	0757-0403	2	1	RESISTOR 121 1% .125W F TC=0+-100	24546	C4-1/8-T0-121R-F
A10R53	0757-0422	5	1	RESISTOR 909 1% .125W F TC=0+-100	24546	C4-1/8-T0-909R-F
A10TP1	1251-0600	0	4	CONNECTOR-SGL CONT PIN 1.14-MM-BSC-SZ SQ	28480	1251-0600
A10TP2	1251-0600	0		CONNECTOR-SGL CONT PIN 1.14-MM-BSC-SZ SQ	28480	1251-0600
A10TP3	1251-0600	0		CONNECTOR-SGL CONT PIN 1.14-MM-BSC-SZ SQ	28480	1251-0600
A10TP4	1251-0600	0		CONNECTOR-SGL CONT PIN 1.14-MM-BSC-SZ SQ	28480	1251-0600
A10U1	0955-0063	0	1	MIXER-DOUBLE BALANCE PWR INP=200MW; PK	28480	0955-0063
A10U2	1826-0558	6	1	IC 337 V REGLTR TO-39	27014	LM337H
A10VR1	1902-0041	4	2	DIODE ZNR 5.11V 5% DO 35 PD .4W	28480	1902-0041
A10VR2	1902-0041	4		DTCDE ZNR 5.11V 5% GO 35 PD= 4W	28480	1902-0041
A10W1	08559-60007	9	1	CABLE ASSEMBLY, THIRD CONVERTER	28480	08559-60007
				A10 MISCELLANEOUS PARTS		
	08559-00006	2	1	COVER THIRD CONVERTER	28480	08559-00006
	2200-0101	0	3	SCREW-MACH 4-40 .168-IN-LG PAN-HD-POZI	28480	2200-0101
	2950-0078	9	2	NUT-HEX-DBL-CHAM 10-32-THD .067-IN-THK	28480	2950-0078
	1200-0173	5	3	INSULATOR-XSTR DAP-GL	28480	1200-0173
	2190-0557	7	2	WASHER-LK INTL T NO. 10 .195-IN-ID	28480	2190-0557
	85660-20068	4	2	GROUND LUG	28480	85660-20068
	85680-00038	0	3	STRIP SHIELDING	28480	85680-00038
A10MP1	7100-1238	9	1	OSCILLATOR SHIELD	28480	7100-1238
A10MP2	85660-20068	4	27	GROUND LUG	28480	85660-20068
A10MP3	08559-00006	2	1	COVER, THIRD CONVERTER	28480	08559-00006
A10MP4	85680-00038	0	3	STRIP, SHIELDING	28480	85680-00038
A10MP5	08559-00029	9	3	CONTACT FINGER	28480	08559-00029

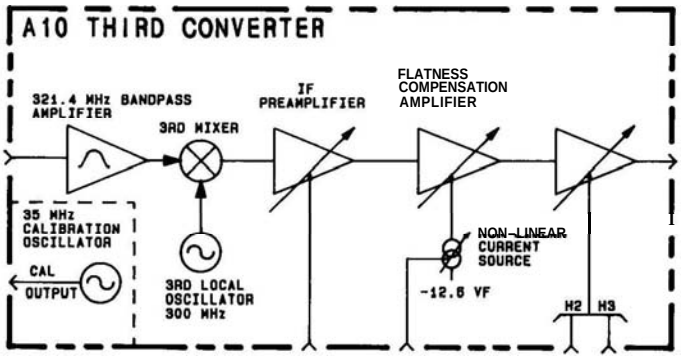

FIGURE 8-42. THIRD CONVERTER ASSEMBLY A10, BLOCK DIAGRAM

A10
THIRD CONVERTER ASSEMBLY

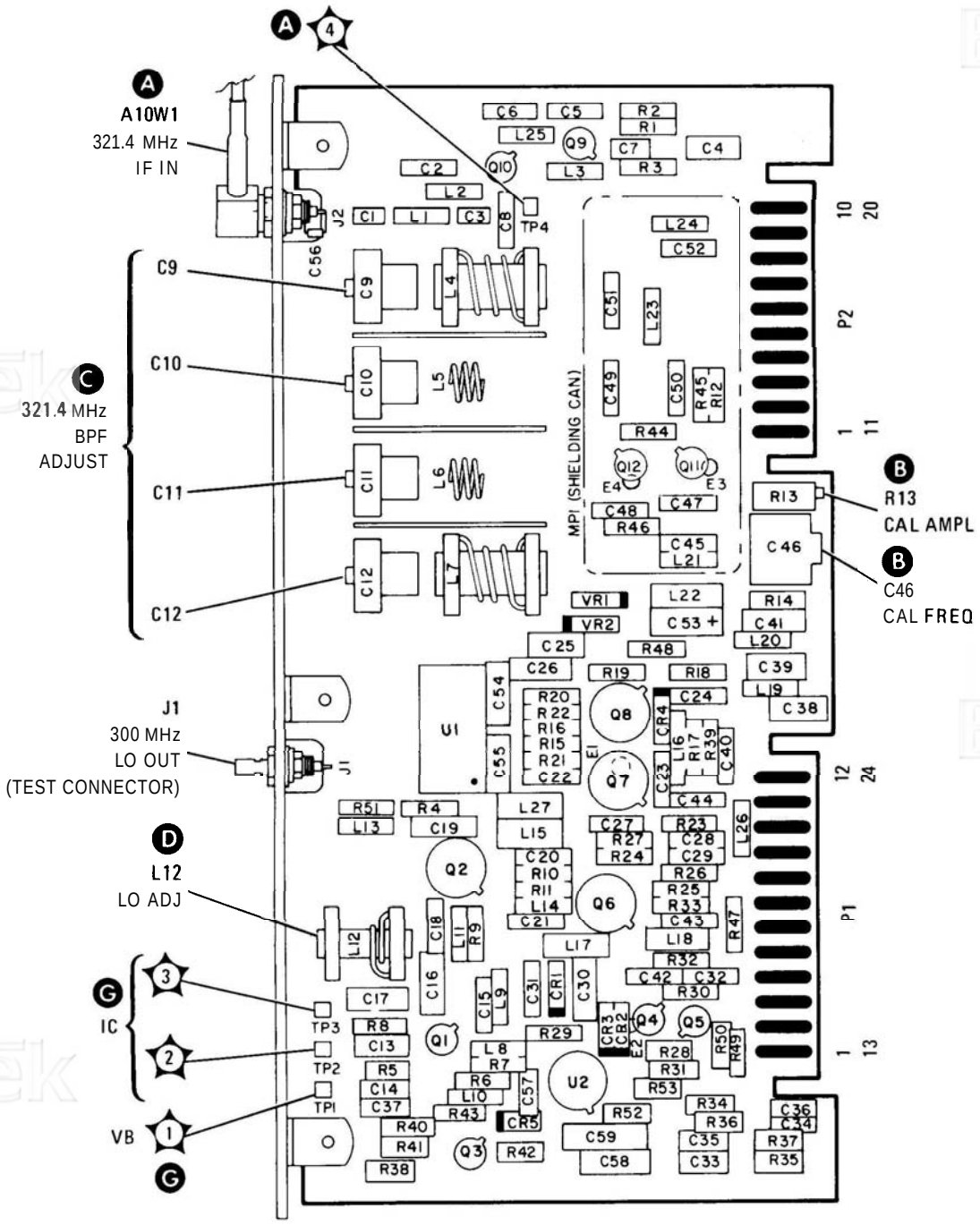

FIGURE 8-43. THIRD CONVERTER ASSEMBLY A10, COMPONENT LOCATIONS

A10 THIRD CONVERTER ASSEMBLY 08559-60080

P1

PIN	SIGNAL	TO/FROM	FUNCTION BLOCK
1 13	GND FLATNESS	A16 A12	J C
2 14	GND H2	A16 A2	J A
3 15	GND H3	A16 A2	J B
4 16	GND PM	A16 A2	J NC
5 17	GND	A16	J
6 18	GND 21.4 MHz IF	A16 A11	J B
7 19	GND	A16	J
8 20	GND	A16	J
9 21	GND REF LEVEL CAL	A16 A2	J A
10 22	GND	A16	J
11 23	GND -12.6V	A16 P1 28 REAR PANEL	J B
12 24	GND +15V	A16 P1 29 REAR PANEL	J B

P2

PIN	SIGNAL	TO/FROM	FUNCTION BLOCK
1 11	GND	A16	J
2 12	GND	A16	J
3 13	GND	A16	J
4 14	GND	A16	J
5 15	GND	A16	J
6 16	GND	A16	J
7 17	GND CAL OUTPUT	A16 FRONT PANEL	J B
8 18	GND	A16	J
9 19	GND	A16	J
10 20	GND	A16	J

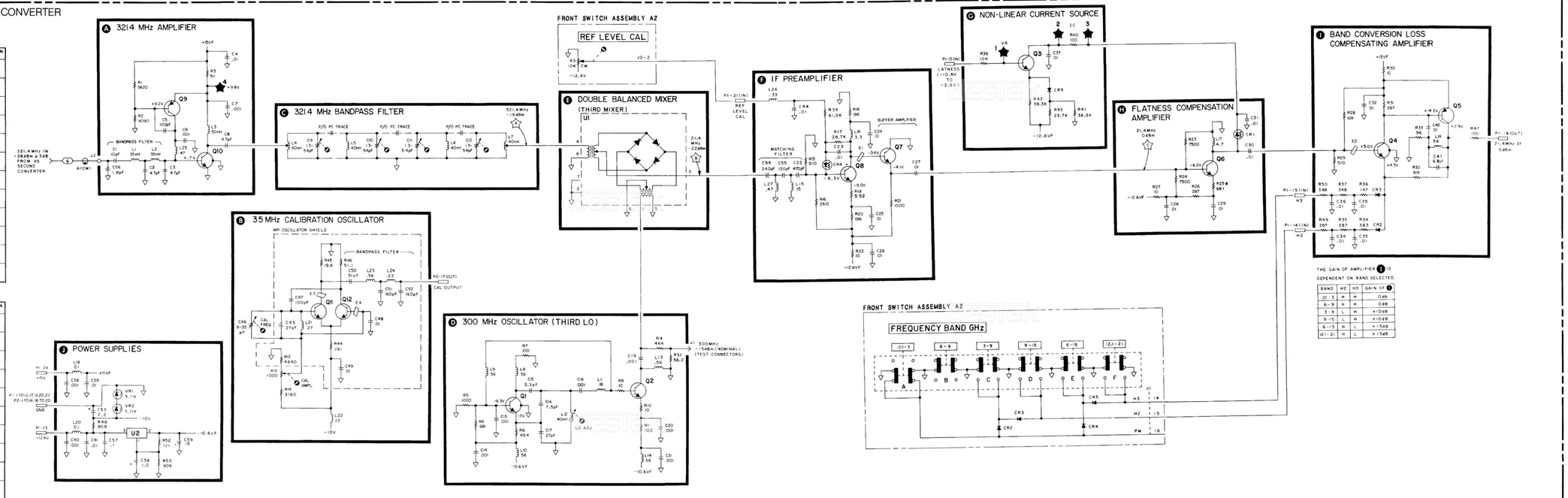

THE GAIN OF AMPLIFIER I IS DEPENDENT ON BAND SELECTED.

BAND	H2	H3	GAIN OF I
.01-3	H	H	0dB
6-9	H	H	0dB
3-9	L	H	+10dB
9-15	L	H	+10dB
6-15	H	L	+15dB
12.1-21	H	L	+15dB

NOTES:

1. REFERENCE DESIGNATORS WITHIN THIS ASSEMBLY ARE ABBREVIATED. PREFIX ABBREVIATION WITH ASSEMBLY NUMBER FOR COMPLETE REFERENCE DESIGNATOR.
2. UNLESS OTHERWISE INDICATED: RESISTANCE IN OHMS (Ω) CAPACITANCE IN MICROFARADS (μF) INDUCTANCE IN MICROHENRIES (μH)
3. MNEMONIC TABLE

MNEMONIC	DESCRIPTION
H2	LOW=SECOND HARMONIC BAND
H3	LOW=THIRD HARMONIC BAND

4. IC PIN CONFIGURATION: (BOTTOM VIEW)

A10

FIGURE 8-44. THIRD CONVERTER ASSEMBLY A10, SCHEMATIC DIAGRAM

BANDWIDTH FILTERS No. 1 and No. 2 ASSEMBLIES A l l and A13, CIRCUIT DESCRIPTION

Bandwidth Filters No. 1 and No. 2 Assemblies A11 and A13 are identical except for some off-board connections. Bandwidth Filter No. 1 Assembly **A11** is described here. Bandwidth Filter No. 1 Assembly **A11** operates at 21.4 MHz with a variable bandwidth of 3 MHz to 1 kHz. The RESOLUTION BW switch selects one of the following eight available bandwidths: 3 MHz, 1 MHz, 300 kHz, 100 kHz, 30 kHz, 10 kHz, 3 kHz, or 1 kHz.

Four stages of filtering are used for all eight bandwidths; each assembly contains two stages. The bandwidths from 30 kHz to 1 kHz are obtained from synchronously-tuned crystal filters. The remaining four bandwidths (100 kHz to 3 MHz) use synchronously-tuned LC tank circuits. The four crystal filter stages contain factory selected and matched crystals **(A11Y1,** A11**Y2, A13Y1,** and **A13Y2)** that must be replaced as a set. If replacement of a bandwidth filter assembly is necessary, the new assembly is shipped with two crystals installed and two packaged separately to replace the crystals on the other assembly. In addition to the filter stages, each board contains a 10 dB Buffer Amplifier, a Unity Gain Buffer Amplifier, and an Output Buffer Amplifier.

10 dB Input Buffer Amplifier (B)

The 10 dB Input Buffer Amplifier is shown as a noninverting operational amplifier in Figure 8-45. Gain for the amplifier is expressed in the equation: Gain = $1 + R_f/R_{in}$. The total resistance of R5, R6, and R7 forms the feedback path **(R_f);** R3 forms the input resistance (R_{in}). This ac model of the amplifier's operation is true for all but the narrowest bandwidths, as illustrated later.

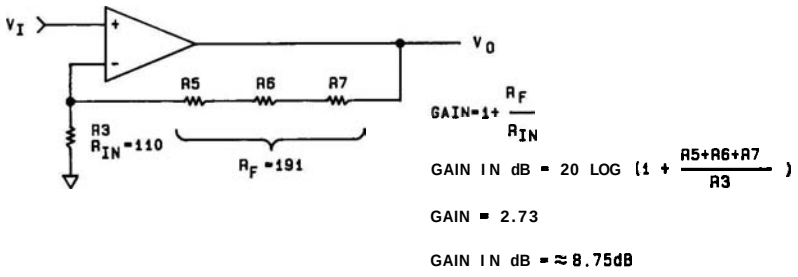

FIGURE 8-45. 10 dB INPUT BUFFER AMPLIFIER GAIN MODEL

Two current paths are used for dc bias in the input buffer amplifier, one for crystal filter poles, another for LC filter poles. When a crystal filtered bandwidth (≤30 kHz) is selected, Q3 (block D) and Q1 are the sources for the current through Q2 (see Figure 8-46). The base voltage of Q2 is fixed by the divider R9 and R10, while the

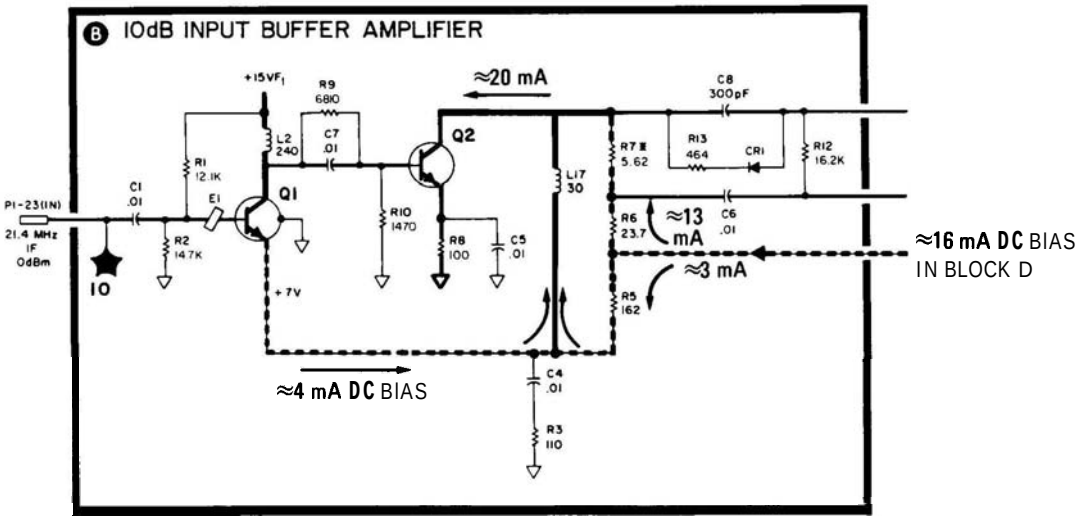

FIGURE 8-46. DC BIAS PATH DURING CRYSTAL POLE OPERATION

emitter is fixed by **R8.** The collector, therefore, becomes a constant-current sink for 20 mA of current supplied by **Q1** and 43. A decrease in the current supplied by **Q3** results in increased current through **Q1,** keeping the current through **Q2** constant. If an LC filtered bandwidth is selected, **BW5F** (filtered bandwidth control line 5 in block C) supplies current via **CR1** and R13 (see Figure 8-47); **Q3** is effectively removed from the circuit.

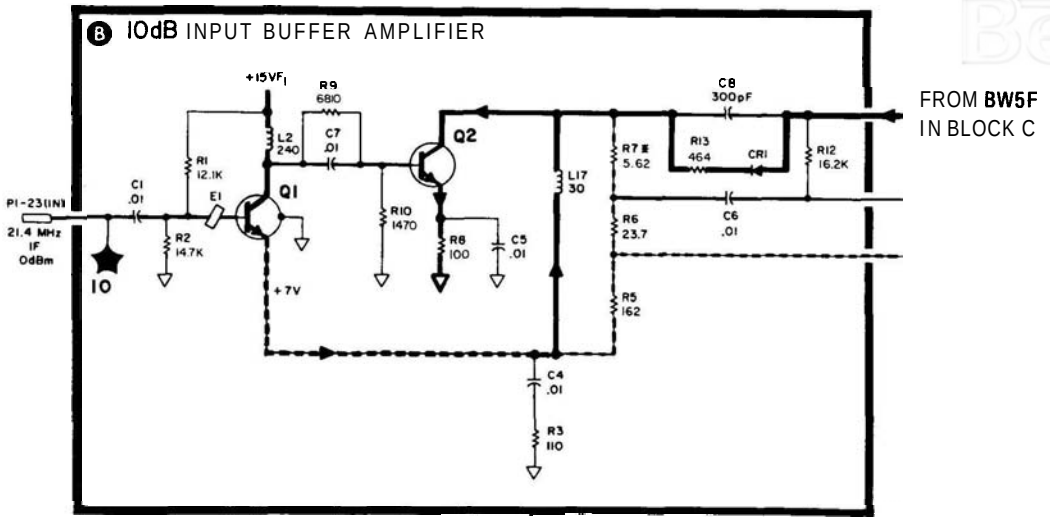

FIGURE 8-47. DC **BIAS** PATH DURING LC POLE OPERATION

To understand how **Q3** functions during crystal filtering modes, a new model is needed. (See Figure 8-48.) Resistor R7 has been omitted to simplify the model. The emitter load of **Q3** (R_t) is the series combination of the internal resistance of Y1 (R_s) and a resistance determined by the bandwidth selected (see First Xtal Pole description). The crystal's series resistance at resonance (R_s) is constant at about 10 ohms. In the 30 kHz bandwidth, **R23*** is in series with R_s. Since **R23*** is very large by comparison, it represents the total load on 4 3 (R_t). When **R23*** is substituted into the gain equation for R_t, a gain of 2.7 (8.6 dB) results. This is roughly equal to the gain without 4 3 in the circuit. In fact, the larger R_t becomes, the closer the gains become.

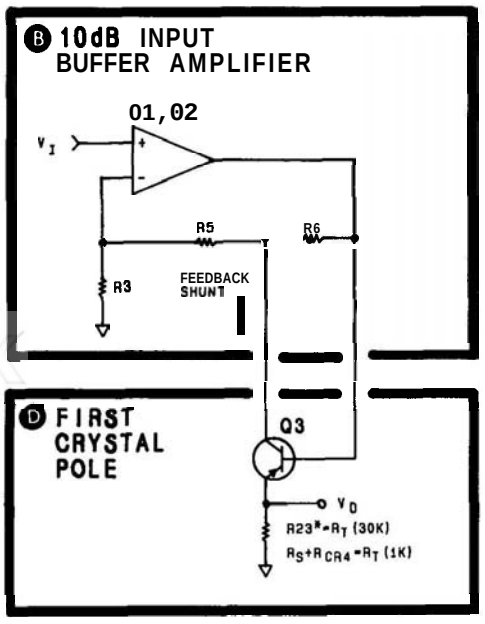

$$OAIN = \frac{1+\frac{R5+R6}{R3}}{1-\frac{R6}{R_t}}$$

FOR 30K BW:
When: $R_t = 8250\ \Omega$

Then: $OAIN = \frac{1+\frac{185.7}{110}}{1-\frac{23.7}{82.50}} = 2.89$ OAIN $2.70 \simeq 8.6$dB

FOR 1K BW:
When: $R_t = 70\ \Omega$

Then: $OAIN = \frac{2.69}{.66} \simeq 4.0 \simeq 12$dB

FIGURE 8-48. 10 dB INPUT BUFFER AMPLIFIER DURING CRYSTAL FILTER OPERATION

When the 1 kHz bandwidth is selected, CR4 is biased on and has a resistance of about 60 ohms. This resistance forms a voltage divider with R_s that results in signal amplitude loss across the crystal. Increased gain in the input buffer amplifier, caused by the load on 43, compensates for these losses. The gain increase occurs when the reduction in R_t turns 43 on even harder, resulting in some of the feedback from R6 being shunted to ground through the collector of 43. This reduction in negative feedback increases the gain of the input buffer amplifier. By substituting into the gain formula the 1 kHz bandwidth R_t (10 + 60 = 70 ohms), a new gain of 4.0 (12 dB) is derived.

First Xtal Pole (D)

Crystal filtering is used for bandwidths of 1 kHz, 3 kHz, 10 kHz, and 30 kHz. Individual poles have a bandwidth about 2.3 times the selected bandwidth, and each filter board assembly (two poles combined) has a bandwidth of about 1.5 times the selected bandwidth. For example, when the 1 kHz bandwidth is selected, each pole has a 3 dB bandwidth of about 2.3 kHz, each assembly a bandwidth of 1.5 kHz. The signal from the input buffer amplifier is routed to 43 and to compensation amplifier 44. (The action of 43 is discussed in the 10 dB Input Buffer Amplifier description.) From 43 the signal is applied to the crystal **(Y1),** where it is filtered before going to the unity gain buffer amplifier.

The crystal functions as a series-resonant filter tuned to 21.4 MHz. An equivalent circuit is shown in Figure 8-49. Parallel capacitance C_o is the result of terminal and case capacitances in the crystal; R_s is the effective resistance at resonance (about 10 ohms). Both C_o and R_s are detrimental to the pole's performance, so compensation is used to nullify their effects. Because they are cancelled, C_o and R_s are not shown in the simplified crystal pole schematic.

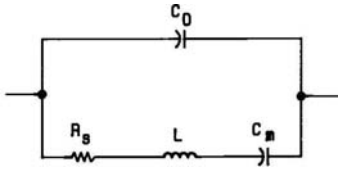

FIGUREJ3-49. CRYSTAL MODEL

Pin diode CR4 (see Figure 8-50) controls the filter's bandwidth by functioning as a variable resistance at 21.4 MHz. The voltage applied to **BW6F** controls the current through CR4 and its resistance. An increase in current decreases the resistance and narrows the bandpass.

The crystal presents a low impedance (R_s) to the signal at resonance, hence signal voltage is developed across CR4. As the signal frequency varies from the center frequency (21.4 MHz), the impedance of the crystal increases, making it part of a voltage divider with CR4 and causing more signal voltage to be developed across the crystal. The frequencies at which crystal impedance and PIN diode resistance become equal are the 3 dB points of the bandpass. Varying the PIN diode resistance, therefore, varies the bandwidth.

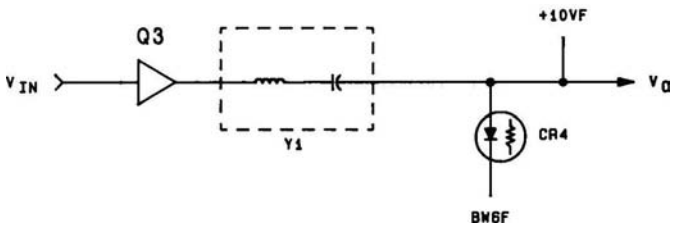

FIGURE 8-50. FIRST CRYSTAL POLE, SIMPLIFIED SCHEMATIC

The case capacitance of the crystal (C,) would cause a second resonant point, or dip, in the bandpass if compensation were not used to nullify its effects. Compensation is provided by Q4 as a current equal to and opposite in phase with the current flowing through C,, as shown in Figure 8-51. Capacitor C15 (SYM) adjusts the phase of the compensating current.

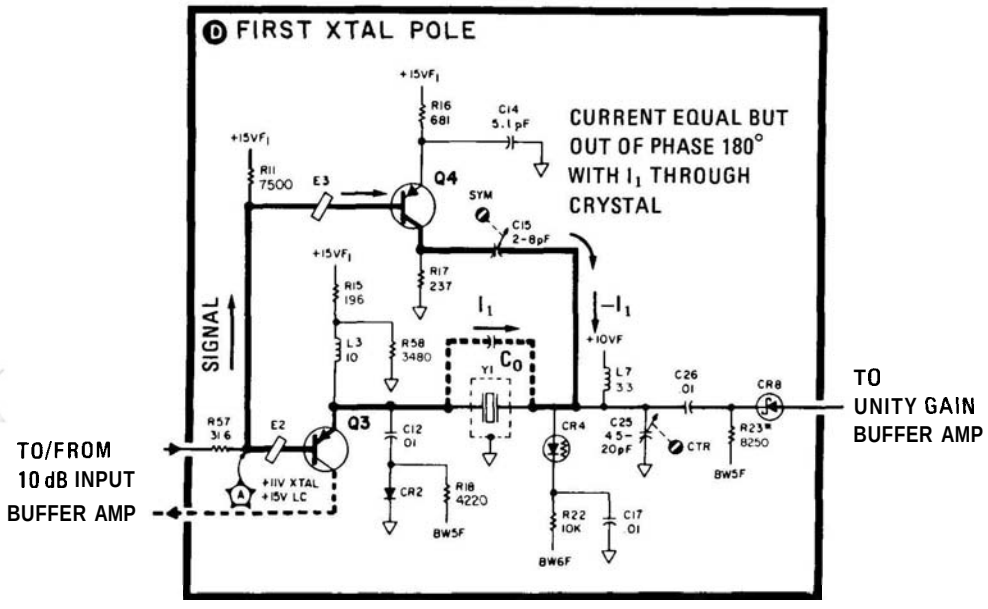

FIGURE 8-51. COMPENSATION AMPLIFIER

The input capacitance of the unity gain buffer, the trace capacitances, and the capacitance of the PIN diode add, causing the center frequency of the filter to be altered. Compensation is used to eliminate this effect. These capacitances are tuned out by including them in a parallel resonant circuit (at 21.4 MHz) formed with L7 and fine tuned by C25 (CTR). Adjusting C25 tunes the circuit to present a high impedance at resonance.

When LC filtering is selected, BW5F forward biases CR2, effectively grounding the emitter of Q3. During crystal filtering, CR2 is reverse biased.

First LC Pole (C)

LC filtering is used for bandwidths of 100 kHz, 300 kHz, 1 MHz, and 3 MHz. The relationship of an individual pole's bandwidth to the selected bandwidth is the same as the crystal pole's (2.3 times per pole and 1.5 times per assembly). The LC filter pole comprises a metallized inductor (L6) in parallel with four capacitors: the series combination of C16* and C20*, C21 (temperature compensation), and C23 (center adjust). This resonant circuit is driven through CR3, which functions as a variable resistor. Bandwidth control line BW7F establishes the current through CR3 and thereby controls the pole's bandwidth. Feedback from the unity gain buffer replenishes losses in the resonant circuit.

A simplified model of the LC pole is shown in Figure 8-52. At resonance, a voltage divider is formed between CR3 and the resonant circuit. The 3 dB points of the bandpass occur when the PIN resistance and the impedance of the resonant circuit are equal. Varying the PIN resistance varies the filter's 3 dB points. The higher the PIN resistance, the narrower the bandwidth. When the 100 kHz bandwidth is selected, CR3 is reverse biased and R19* sets the bandwidth; if one of the other bandwidths is selected, the parallel combination of R19* and CR3 is utilized. The intrinsic capacitance of PIN diode CR3 affects the bandpass, if not compensated for. Adjustable capacitance C73 (LC DIP) and L5 are in parallel with the PIN capacitance and allow it to be tuned out of the circuit.

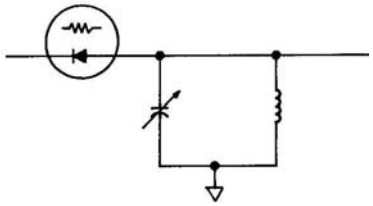

FIGURE 8-52. LC POLE MODEL

A simplified schematic of the first LC pole is shown in Figure 8-53. The fundamental frequency-determining components are L6 and the center-tapped capacitance C16* and C20*. Positive feedback is applied to the center-tap at 21.4 MHz to compensate for losses in the tank circuit. The application of feedback makes it important that C16* and C20* be about the same value for proper pole operation. The level of the feedback is controlled by CR5, acting as a variable resistance. LC feedback control R26 establishes the current through CR5 and its resistance.

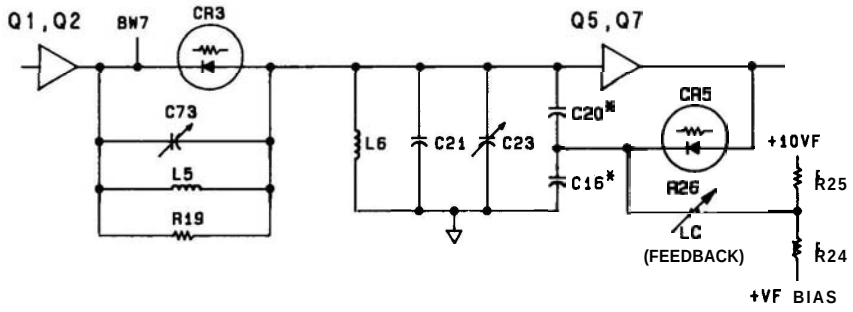

FIGURE 8-53. FIRST LC POLE, SIMPLIFIED SCHEMATIC

When an LC filtered bandwidth is selected, BW5F is at +15V; BW7F is at a voltage greater than or equal to +6.8V and supplies bandwidth-determining bias current to CR3. Supply line +VF BIAS is always at +6.8V. Control line BWSF reverse biases CR8 (block B), disabling the crystal pole, and forward biases CR1 (block B), opening the dc bias path to Q2 (see Figure 8-47). During LC operation, CR6 is reverse biased, keeping C28 out of the circuit. When a crystal filtered bandwidth is selected, BWSF forward biases CR6 and allows C28 to ground the signal path.

Unity Gain Buffer Amplifier (E)

Operation of the Unity Gain Buffer Amplifier is similar to the 10 dB Input Buffer Amplifier, except that it has an FET input (Q5) and unity gain. The input signal path is activated by the BWSF line, which switches on CR9 (during LC mode) or CR8 (during crystal mode).

When the crystal mode is selected, the current through the input FET (Q5) is determined by Q6 and constant current sink Q7 (which sinks about 4 mA). During LC mode, current is supplied through R37 and CR10 from BWSE The input FET current is a good indication of the stage's operation and can be monitored by measuring the gate-to-source voltage. This voltage should be between +0.2V and +1.5V (an increase in current decreases the voltage).

Capacitor C68 and L19 form a feedback circuit that tunes Q7 to 21.4 MHz. Trimmer Resistor R31 (XTL FEEDBACK) adjusts the feedback and controls the stage gain as did R5 and R6 in block B.

Second Xtal Pole (G)

The operation of the Second Xtal Pole is identical with the First Xtal Pole.

Second LC Pole (F)

Operation of the Second LC Pole is the same as the First LC Pole, except that R56* performs the same function as PIN diode CR5.

Output Buffer Amplifier (H)

The Output Buffer Amplifier is a complementary pair of transistors in which Q9 acts as a source follower with its output current boosted by Q10. The current through input FET Q9 is established by R53:

$$I_{...} = V_{be}(Q10)/R53$$

Which becomes:

$$I_{...} = .7/196 \text{ or about } 3 \text{ mA}.$$

The total current through Q9 and Q10 is set by R54. The input signal path is selected by either CR15 (during crystal mode) or CR16 (during LC mode).

BANDWIDTH FILTERS No. 1 and No. 2 ASSEMBLIES A11 and A13, TROUBLESHOOTING

Observe front panel switch positions in relation to the problem to isolate the area of the failure.

Check for leaky diodes and capacitors. Loading of the signal path can alter either a pole's gain or bandpass shape or both.

Isolate crystal poles from LC poles to prevent interaction of failure symptoms. Isolation of the crystal poles from the circuit is best achieved by removing CR8 and CR15 (blocks D and G). Isolation of the LC poles is best achieved by removing CR9 and CR16 (blocks C and F).

TABLE 88. BANDWIDTH FILTER NO. 1 ASSEMBLY A11, REPLACEABLE PARTS (1 OF 3)

Reference Designation	HP Part Number	C D	Qty	Description	Mfr Code	Mfr Part Number
A11	08559-60058	0	1	BANDWIDTH FILTER NO. 1 ASSEMBLY	28480	08559-60058
A11C1	0160-2055	9	38	CAPACITOR-FXD .01UF +80-20% 100VDC CER	28480	0160-2055
A11C2	0160-0127	2	1	CAPACITOR-FXD 1UF +-20% 25VDC CER	28480	0160-0127
A11C4	0160-2055	9		CAPACITOR-FXD .01UF +80-20% 100VDC CER	28480	0160-2055
A11C5	0160-2055	9		CAPACITOR-FXD .01UF +80-20% 100VDC CER	28480	0160-2055
A11C6	0160-2055	9		CAPACITOR-FXD .01UF +80-20% 100VDC CER	28480	0160-2055
A11C7	0160-2055	9		CAPACITOR-FXD .01UF +80-20% 100VDC CER	28480	0160-2055
A11C8	0160-2207	3	2	CAPACITOR-FXD 300PF +-5% 300VDC MICA	28480	0160-2207
A11C9	0160-2055	9		CAPACITOR-FXD .01UF +80-20% 100VDC CER	28480	0160-2055
A11C10	0160-2055	9		CAPACITOR-FXD .01UF +80-20% 100VDC CER	28480	0160-2055
A11C11	0160-2055	9		CAPACITOR-FXD .01UF +80-20% 100VDC CER	28480	0160-2055
A11C12	0160-2055	9		CAPACITOR-FXD .01UF +80-20% 100VDC CER	28480	0160-2055
A11C13	0160-3456	6	3	CAPACITOR-FXD 1000PF +-10% 1KVDC CER	28480	0160-3456
A11C14	0160-2249	3	2	CAPACITOR-FXD 4.7PF +-.25PF 500VDC CER	28480	0160-2249
A11C15	0121-0059	7	2	CAPACITOR-V TRMR-CER 2-8PF 350V PC-MTG	52763	304324 2/8PF NPO
A11C16*	0160-0134	1	4	CAPACITOR-FXD 220PF +-5% 300VDC MICA	28480	0160-0134
A11C17	0160-2055	9		CAPACITOR-FXD .01UF +80-20% 100VDC CER	28480	0160-2055
A11C18	0160-2055	9		CAPACITOR-FXD .01UF +80-20% 100VDC CER	28480	0160-2055
A11C19	0160-2055	9		CAPACITOR-FXD .01UF +80-20% 100VDC CER	28480	0160-2055
A11C20*	0160-0134	1		CAPACITOR-FXD 220PF +-5% 300VDC MICA	28480	0160-0134
A11C21	0160-0437	7	2	CAPACITOR-FXD 12PF +-5% 500VDC CER	28480	0160-0437
A11C22	0160-4084	8	3	CAPACITOR-FXD .1UF +-20% 50VDC CER	28480	0160-4084
A11C23	0121-0036	0	2	CAPACITOR-V TRMR-CER 5.5-18PF 350V	52763	304324 5.5/18PF NPO
A11C24	0160-2055	9		CAPACITOR-FXD .01UF +80-20% 100VDC CER	28480	0160-2055
A11C25	0121-0446	6	2	CAPACITOR-V TRMR-CER 4.5-23PF 160V	28480	0121-0446
A11C26	0160-2055	9		CAPACITOR-FXD .01UF +80-20% 100VDC CER	28480	0160-2055
A11C27	0160-2055	9		CAPACITOR-FXD .01UF +80-20% 100VDC CER	28480	0160-2055
A11C28	0160-2055	9		CAPACITOR-FXD .01UF +80-20% 100VDC CER	28480	0160-2055
A11C29	0160-3456	6		CAPACITOR-FXD 1000PF +-10% 1KVDC CER	28480	0160-3456
A11C30	0160-2055	9		CAPACITOR-FXD .01UF +80-20% 100VDC CER	28480	0160-2055
h11C31	0160-4298	6	1	CAPACITOR-FXD 4700PF +-20% 250VDC CER	56289	C067F251H472MS22-CDH
A11C32	0160-4084	8		CAPACITOR-FXD .1UF +-20% 50VDC CER	28480	0160-4084
A11C33	0160-2207	3		CAPACITOR-FXD 300PF +-5% 300VDC MICA	28480	0160-2207
A11C34	0160-2055	9		CAPACITOR-FXD .01UF +80-20% 100VDC CER	28480	0160-2055
A11C35	0160-2055	9		CAPACITOR-FXD .01UF +80-20% 100VDC CER	28480	0160-2055
A11C36	0160-2055	9		CAPACITOR-FXD .01UF +80-20% 100VDC CER	28480	0160-2055
A11C37	0160-2249	3		CAPACITOR-FXD 4.7PF +-.25PF 500VDC CER	28480	0160-2249
A11C38	0121-0059	7		CAPACITOR-V TRMR-CER 2-8PF 350V PC-MTG	52763	304324 2/8PF NPO
A11C40	0160-2055	9		CAPACITOR-FXD .01UF +80-20% 100VDC CER	28480	0160-2055
A11C41	0160-3456	6		CAPACITOR-FXD 1000PF +-10% 1KVDC CER	28480	0160-3456
A11C42	0160-2055	9		CAPACITOR-FXD .01UF +80-20% 100VDC CER	28480	0160-2055
A11C43*	0160-0134	1		CAPACITOR-FXD 220PF +-5% 300VDC MICA	28480	0160-0134
A11C44	0160-0437	7		CAPACITOR-FXD 12PF +-5% 500VDC CER	28480	0160-0437
A11C45	0121-0036	1		CAPACITOR-V TRMR-CER 5.5-18PF 350V	52763	304324 5.5/18PF NPO
A11C46	0160-4084	8		CAPACITOR-FXD .1UF +-20% 50VDC CER	28480	0160-4084
A11C47	0160-2055	9		CAPACITOR-FXD .01UF +80-20% 100VDC CER	28480	0160-2055
A11C48	0160-2055	9		CAPACITOR-FXD .01UF +80-20% 100VDC CER	28480	0160-2055
A11C49	0160-2055	9		CAPACITOR-FXD .01UF +80-20% 100VDC CER	28480	0160-2055
A11C50	0160-2055	9		CAPACITOR-FXD .01UF +80-20% 100VDC CER	28480	0160-2055
A11C51	0160-2055	9		CAPACITOR-FXD .01UF +80-20% 100VDC CER	28480	0160-2055
A11C52	0160-2055	9		CAPACITOR-FXD .01UF +80-20% 100VDC CER	28480	0160-2055
A11C53	0160-2055	9		CAPACITOR FXD .01UF +80 20% 100VDC CER	28480	0160-2055
A11C54	0121-0446	6		CAPACITOR-V TRMR CER 4 5 20PF 160V	28480	0121-0446
A11C55	0160-2055	9		CAPACITOR FXD .01UF +80 20% 100VDC CER	28480	0160-2055
A11C60	0160-2055	9		CAPACITOR FXD .01UF +80 20% 100VDC CER	28480	0160-2055
A11C61	0160-2055	9		CAPACITOR FXD .01UF +80-20% 100VDC CER	28480	0160-2055
A11C62	0160-2055	9		CAPACITOR-FXD .01UF +80-20% 100VDC CER	28480	0160-2055
A11C63	0160-2055	9		CAPACITOR-FXD .01UF +80 20% 100VDC CER	28480	0160-2055
A11C64*	0160-0134	1		CAPACITOR FXD 220PF +-5% 300VDC MICA	28480	0160-0134
A11C65	0160-2055	9		CAPACITOR-FXD .01UF +GO-20% 100VDC CER	28480	0160-2055
A11C66	0160-2055	9		CAPACITOR-FXD .01UF +80-20% 100VDC CER	28480	0160-2055
A11C67	0160-2055	9		CAPATITOR-FXD .01UF +80-20% 100VDC CER	28480	0160-2055
A11C68	0160-2258	4	1	CAPACITOR FXD 11PF +-5% 500VDC CER 0+-30	28480	0160-2258
A11C69	0160-2055	9		CAPACTTOR-FXD .01UF +00 20% 100VDC CER	28480	0160-2055
A11C73	0121-0452	4	2	CAPACITOR-U TRMR AIR 1 3 5 4PF 175V	74970	187-0103-028
A11C74	0121-0452	4		CAPACITOR-V TRMR-AIR 1.3 5.4PF 175V	74970	187-0103-028
A11CR1	1901-0047	8	6	DIODE SWITCHING 20V 75MA 10NS	28480	1901-0047
A11CR2	1901-0047	8		DIODE-SWITCHING 20U 75MA 10NS	28480	1901-0047
A11CR3	1901-1070	9	5	DIODE PIN 110V	28480	1901-1070
A11CR4	1901-1070	9		DIODE PIN 110V	28480	1901-1070
A11CR5	1901-1070	9		DIODC PIN 110V	28480	1901-1070

TABLE 8-8. BANDWIDTH FILTER NO. 1 ASSEMBLY A11, REPLACEABLE PARTS (2 OF 3)

Reference Designation	HP Part Number	C D	Qty	Description	Mfr Code	Mfr Part Number
A11CR6	1901-0535	2	5	DIODE-SM SIG SCHOTTKY	28480	1901-0535
A11CR8	1901-0535	9		DIODE-SM SIG SCHOTTKY	28480	1901-0535
A11CR9	1901-0047	8		DIODE-SWITCHING 20V 75MA 10NS	28480	1901-0047
A11CR10	1901-0047	8		DIODE-SWITCHING 20V 75MA 10NS	28480	1901-0047
A11CR11	1901-1070	9		DIODE-PIN 110V	28480	1901-1070
A11CR12	1901-1070	9		DIODE-PIN 110V	28480	1901-1070
A11CR13	1901-0047	8		DIODE-SWITCHING 20V 75MA 10NS	28480	1901-0047
A11CR14	1901-0535	9		DIODE-SM SIG SCHOTTKY	28480	1901-0535
A11CR15	1901-0535	9		DIODE-SM SIG SCHOTTKY	28480	1901-0535
A11CR16	1901-0047	8		DIODE-SWITCHING 20V 75MA 10NS	28480	1901-0047
A11CR17	1901-0535	9		DIODE-SM SIG SCHOTTKY	28480	1901-0535
A11E1	9170-0029	3	8	CORE-SHIELDING BEAD	28480	9170-0029
A11E2	9170-0329	3		CORE-SHIELDING BEAD	28480	9170-0329
A11E3	9170-0029	3		CORE-SHIELDING BEAD	28480	9170-0029
A11E4	9170-0329	3		CORE-SHIELDING BEAD	28480	9170-0329
A11E5	9170-0029	3		CORE-SHIELDING BEAD	28480	9170-0029
A11E6	9170-0329	3		CORE-SHIELDING BEAD	28480	9170-0329
A11E7	9170-0029	3		CORE-SHIELDING BEAD	28480	9170-0029
A11E8	9170-0329	3		CORE-SHIELDING BEAD	28480	9170-0329
A11L1	9140-0112	2	1	INDUCTOR RF-CH-MLD 4.7UH 10%	28480	9140-0112
A11L2	9100-1641	0	1	INDUCTOR RF-CH-MLD 240UH 5% .166DX.385LG	28480	9100-1641
A11L3	9140-0114	4	2	INDUCTOR RF-CH-MLD 10UH 10% .166DX.385LG	28480	9140-0114
A11L4	9100-1624	9	3	INDUCTOR RF-CH-MLD 30UH 5% .166DX.385LG	28480	9100-1624
A11L5	9140-0179	1	2	INDUCTOR RF-CH-MLD 22UH 10% .166DX.385LG	28480	9140-0179
A11L6	9100-2813	0	2	INDUCTOR 400NH 10% .312DX1.316LG Q=150	28480	9100-2813
A11L7	9140-0399	7	2	INDUCTOR RF-CH-MLD 2.2UH 5% .166DX.385LG	28480	9140-0399
A11L8	9140-0178	3	1	INDUCTOR RF-CH-MLD 12UH 10% .166DX.385LG	28480	9140-0178
A11L9	9100-1619	2	2	INDUCTOR RF-CH-MLD 6.8UH 10%	28480	9100-1619
A11L10	9140-0114	4		INDUCTOR RF-CH-MLD 10UH 10% .166DX.385LG	28480	9140-0114
A11L11	9100-1624	9		INDUCTOR RF-CH-MLD 30UH 5% .166DX.385LG	28480	9100-1624
A11L12	9140-0179	1		INDUCTOR RF-CH-MLD 22UH 10% .166DX.385LG	28480	9140-0179
A11L13	9140-0399	7		INDUCTOR RF-CH-MLD 2.2UH 5% .166DX.385LG	28480	9140-0399
A11L14	9100-1620	5	1	INDUCTOR RF-CH-MLD 150H 10% .166DX.385LG	28480	9100-1620
A11L15	9100-2813	0		INDUCTOR 400NH 10% .312DX1.016LG Q=150	28480	9100-2813
A11L16	9140-0144	3	2	INDUCTOR RF-CH-MLD 4.7UH 10% .135DX.26LG	28480	9140-0144
A11L17	9100-1624	9		INDUCTOR RF-CH-MLD 30UH 5% .166DX.385LG	28480	9100-1624
A11L18	9100-1619	2		INDUCTOR RF-CH-MLD 6.8UH 10%	28480	9100-1619
A11L19	9140-0144	0		INDUCTOR RF-CH-MLD 4.7UH 10% .135DX.26LG	28480	9140-0144
A11Q1	1854-0345	8	1	TRANSISTOR NPN 2N5179 SI TO-72 PD=200MW	04713	2N5179
A11Q2	1854-0404	0	2	TRANSISTOR NPN SI TO-18 PD=360MW	28480	1854-0404
A11Q3	1853-0007	7	5	TRANSISTOR PNP 2N3251 SI TO-18 PD=360MW	04713	2N3251
A11Q4	1853-0007	7		TRANSISTOR PNP 2N3251 SI TO-18 PD=360MW	04713	2N3251
A11Q5	1855-0267	5	2	TRANSISTOR J-FET N-CHAN D-MODE TO-92 SI	28480	1855-0267
A11Q6	1853-0007	7		TRANSISTOR PNP 2N3251 SI TO-18 PD=360MW	04713	2N3251
A11Q7	1854-0404	0		TRANSISTOR NPN SI TO-18 PD=360MW	28480	1854-0404
A11Q8	1853-0007	7		TRANSISTOR PNP 2N3251 SI TO-18 PD=360MW	04713	2N3251
A11Q9	1855-0267	5		TRANSISTOR J-FET N-CHAN D-MODE TO-92 SI	28480	1855-0267
A11Q10	1853-0007	7		TRANSISTOR PNP 2N3251 SI TO-18 PD=360MW	04713	2N3251
A11R1	0757-0444	1		RESISTOR 12.1K 1% .125W F TC=0+-100	24546	C4-1/8-T0-1212-F
A11R2	0698-3156	2	1	RESISTOR 14.7K 1% .125W F TC=0+-100	24546	C4-1/8-T0-1472-F
A11R3	0757-0402	1	2	RESISTOR 110 1% .125W F TC=0+-100	24546	C4-1/8-T0-111-F
A11R4	0757-0442	9	8	RESISTOR 10K 1% .125W F TC=0+-100	24546	C4-1/8-T0-1002-F
A11R5	0757-0405	4	1	RESISTOR 162 1% .125W F TC=0+-100	24546	C4-1/8-T0-162R-F
A11R6	0698-3431	6	1	RESISTOR 23.7 1% .125W F TC=0+-100	03888	PME55-1/8-T0-23R7-F
A11R7*	0698-8821	8	1	RESISTOR 5.62 1% .125W F TC=0+-100	28480	0698-8821
A11R8	0757-0401	0	3	RESISTOR 100 1% .125W F TC=0+-100	24546	C4-1/8-T0-101-F
A11R9	0757-0439	4	1	RESISTOR 6.81K 1% .125W F TC=0+-100	24546	C4-1/8-T0-6811-F
A11R10	0757-1094	9	1	RESISTOR 1.47K 1% .125W F TC=0+-100	24546	C4-1/8-T0-1471-F
A11R11	0757-0440	7	1	RESISTOR 7.5K 1% .125W F TC=0+-100	24546	C4-1/8-T0-7501-F
A11R12	0757-0447	4	1	RESISTOR 16.2K 1% .125W F TC=0+-100	24546	C4-1/8-T0-1622-F
A11R13	0698-0082	7	1	RESISTOR 464 1% .125W F TC=0+-100	24546	C4-1/8-T0-4640-F
A11R14	0757-0346	2	4	RESISTOR 10 1% .125W F TC=0+-100	24546	C4-1/8-T0-10R0-F
A11R15	0698-3440	7	2	RESISTOR 196 1% .125W F TC=0+-100	24546	C4-1/8-T0-196R-F
A11R16	0757-0419	0	2	RESISTOR 681 1% .125W F TC=0+-100	24546	C4-1/8-T0-681R-F
A11R17	0698-3442	9	2	RESISTOR 237 1% .125W F TC=0+-100	24546	C4-1/8-T0-237R-F
A11R18	0698-3154	0	2	RESISTOR 4.22K 1% .125W F TC=0+-100	24546	C4-1/8-T0-4221-F
A11R19*	0698-3155	1	2	RESISTOR 4.64K 1% .125W F TC=0+-100	24546	C4-1/8-T0-4641-F
A11R20	0757-0442	9		RESISTOR 10K 1% .125W F TC=0+-100	24546	C4-1/8-T0-1002-F
A11R21	0757-0442	9		RESISTOR 10K 1% .125W F TC=0+-100	24546	C4-1/8-T0-1002-F
A11R22	0757-0442	9		RESISTOR 10K 1% .125W F TC=0+-100	24546	C4-1/8-T0-1002-F
A11R23*	0757-0288	1	2	RESISTOR 9.09K 1% .125W F TC=0+-100	19701	MF4C1/8-T0-9091-F
A11R24	0757-0465	6	2	RESISTOR 100K 1% .125W F TC=0+-100	24546	C4-1/8-T0-1003-F
A11R25	0757-0465	6		RESISTOR 100K 1% .125W F TC=0+-100	24546	C4-1/8-T0-1003-F

TABLE 8-8. BANDWIDTH FILTER NO. 1 ASSEMBLY A11, REPLACEABLE PARTS (3 OF 3)

Reference Designation	HP Part Number	CD	Qty	Description	Mfr Code	Mfr Part Number
A11R26	2100-3163	8	1	RESISTOR-TRMR 1M 20% C SIDE-ADJ 17-TRN	32111	43P105
A11R27	0757-0444	1		RESISTOR 12.1K 1% .125W F TC=0+-100	24546	C4-1/8-T0-1212-F
A11R28	0757-0443	0	2	RESISTOR 11K 1% .125W F TC=0+-100	24546	C4-1/8-T0-1102-F
A11R29	0698-0083	8	2	RESISTOR 1.96K 1% .125W F TC=0+-100	24546	C4 1/8-T0-1961-F
A11R30	0757-0432	1		RESISTOR 110 1% .125W F TC=0+-100	24546	C4-1/8-T0-111-F
A11R31	2100-3052	4	1	RESISTOR-TRMR 50 10% C SIDE-ADJ 17-TRN	02111	43P500
A11R32*	0698-3454	3	1	RESISTOR 215K 1% .125W F TC=0+-100	24546	C4-1/8-T0-2153-F
A11R33	0757-0442	9		RESISTOR 10K 1% .125W F TC=0+-100	24546	C4-1/8-T0-1002-F
A11R34	0757-0199	3	1	RESISTOR 21.5K 1% .125W F TC=0+-100	24546	C4-1/8-T0-2152-F
A11R35	0757-0288	1		RESISTOR 9.09K 1% .125W F TC=0+-100	19701	MF4C1/8-T0-9091-F
A11R36	0698-0083	8		RESISTOR 1.96K 1% .125W F TC=0+-100	24546	C4-1/8-T0-1961-F
A11R37	0757-0416	7	2	RESISTOR 511 1% .125W F TC=0+-100	24546	C4-1/8-T0-511R-F
A11R38	0698-3441	8	1	RESISTOR 215 1% .125W F TC=0+-100	24546	C4-1/8-T0-215R-F
A11R39	0757-0419	0		RESISTOR 681 1% .125W F TC=0+-100	24546	C4-1/8-T0-681R-F
A11R40	0698-3442	9		RESISTOR 237 1% .125W F TC=0+-100	24546	C4-1/8-T0-237R-F
A11R41	0698-3154	0		RESISTOR 4.22K 1% .125W F TC=0+-100	24546	C4-1/8-T0-4221-F
A11R42	0757-0442	9		RESISTOR 10K 1% .125W F TC=0+-100	24546	C4-1/8-T0-1002-F
A11R43*	0698-3155	1		RESISTOR 4.64K 1% .125W F TC=0+-100	24546	C4-1/8-T0-4641-F
A11R44	0757-0442	9		RESISTOR 10K 1% .125W F TC=0+-100	24546	C4-1/8-T0-1002-F
A11R45	0757-0401	0		RESISTOR 100 1% .125W F TC=0+-100	24546	C4-1/8-T0-101-F
A11R46	0757-0401	0		RESISTOR 100 1% .125W F TC=0+-100	24546	C4-1/8-T0-101-F
A11R47	0757-0346	2		RESISTOR 10 1% .125W F TC=0+-100	24546	C4-1/8-T0-10R0-F
A11R48*	0757-0444	1	4	RESISTOR 12.1K 1% .125W F TC=0+-100	24546	C4-1/8-T0-1212-F
A11R49	0757-0444	1		RESISTOR 12.1K 1% .125W F TC=0+-100	24546	C4-1/8-T0-1212-F
A11R50	0757-0346	2		RESISTOR 10 1% .125W F TC=0+-100	24546	C4-1/8-T0-10R0-F
A11R51	0757-0346	2		RESISTOR 10 1% .125W F TC=0+-100	24546	C4-1/8-T0-10R0-F
A11R52	0757-0443	0		RESISTOR 11K 1% .125W F TC=0+-100	24546	C4-1/8-T0-1102-F
A11R53	0698-3440	7		RESISTOR 196 1% .125W F TC=0+-100	24546	C4-1/8-T0-196R-F
A11R54	0757-0416	7		RESISTOR 511 1% .125W F TC=0+-100	24546	C4-1/8-T0-511R-F
A11R55	0757-0442	9		RESISTOR 10K 1% .125W F TC 0+-100	24546	C4-1/8-T0-1002-F
A11R56*	0757-0274	5	1	RESISTOR 1.21K 1% .125W F TC=0+-100	24546	C4-1/8-T0-1211-F
A11R57	0757-0180	2	2	RESISTOR 31.6 1% .125W F TC=0+-100	28480	0757-0180
A11R58	0698-3152	8	1	RESISTOR 3.48K 1% .125W F TC=0+-100	24546	C4-1/8-T0-3481-F
A11R59	0757-0180	2		RESISTOR 31.6 1% .125W F TC=0+-100	28480	0757-0180
A11R60	0698-3153	9	1	RESISTOR 3.83K 1% .125W F TC=0+-100	24546	C4-1/8-T0-3831-F
A11TP1	0360-1788	7	4	CONNECTOR SGL CONT PIN .045 IN BSC SZ SQ	28480	0360-1788
A11TP2	0360-1788	7		CONNECTOR-SGL CONT PIN .045 IN BSC SZ SQ	28480	0360-1788
A11TP3	1251-0600	0	7	CONNECTOR-SGL CONT PIN 1.14 MM-BSC SZ SQ	28480	1251-0600
A11TP4	0360-1788	7		CONNECTOR SGL CONT PIN .045 IN BSC SZ SQ	28480	0360-1788
A11TP5	0360-1788	7		CONNECTOR-SGL CONT PIN .045 IN-BSC SZ SQ	28480	0360-1788
A11TP6	1251-0600	0		CONNECTOR SGL CONT PIN 1.14-MM BSC SZ SQ	28480	1251-0600
A11TP8	1251-0600	0		CONNECTOR-SGL CONT PIN 1.14 MM-BSC 97 SQ	28480	1251-0600
A11TP9	1251-0600	0		CONNECTOR SGL CONT PIN 1.14 MM BSC SZ SQ	28480	1251-0600
A11TP10	1251-0600	0		CONNECTOR-SGL CONT PIN 1.14 MM-BSC-SZ SQ	28480	1251-0600
A11TP11	1251-0600	0		CONNECTOR-SGL CONT PIN 1.14-MM-BSC SZ SQ	28480	1251-0600
A11TP12	1251-0600	0		CONNECTOR-SGL CONT PIN 1.14 MM-BSC 97 SQ	28480	1251-0600
A11VR1	1902-0048	1	1	DIODE ZNR 6.81V 5% DO-35 PD=.4U	28480	1902-0048
A11Y1	0410-0776	8	2	CRYSTAL-QUARTZ 21.4 MHZ HC 25/U-HLDR	28480	0410-0776
A11Y2	0410-0776	8		CRYSTAL-QUARTZ 21.4 MHZ HC 25/U-HLDR	28480	0410-0776
				A11 MISCELLANEOUS PARTS		
	0403-0826	6	1	PLUG HOLE BDR-HD FOR .187 D HOLE NYL	32768	207-120241-03-3101
	08559-00025	5	1	BAFFLE INDUCTOR	28480	08559-00025
	08559-00007	3	1	COVER, BW FILTER NO. 1	28480	08559-00007

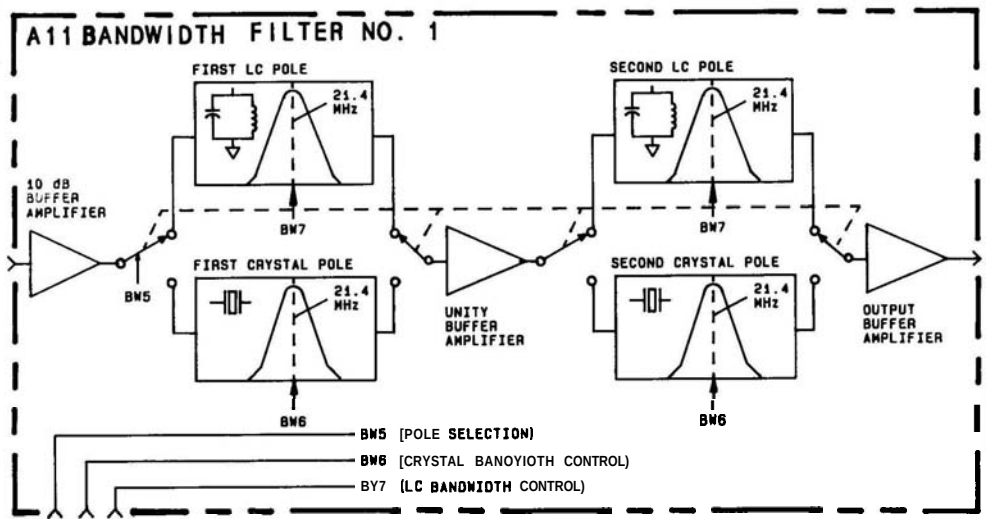

FIGURE 8-54. BANDWIDTH FILTER NO. 1 ASSEMBLY A11, BLOCK DIAGRAM

A11
BANDWIDTH FILTER NO. 1 ASSEMBLY

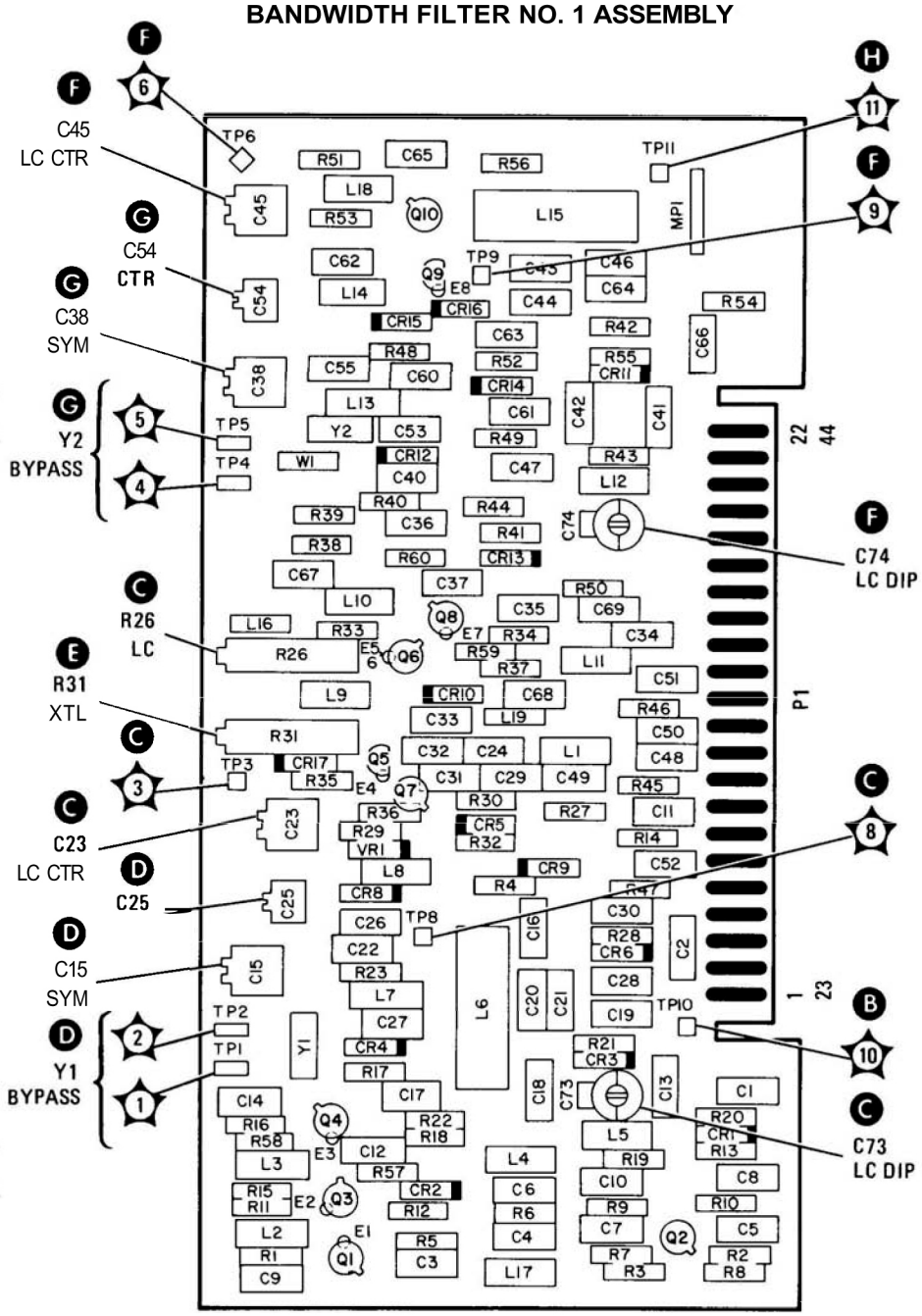

FIGURE 8-55. BANDWIDTH FILTER NO. 1 ASSEMBLY A11, COMPONENT LOCATIONS

A11 BANDWIDTH ASSEMBLY
08559-60058

P1

PIN	SIGNAL	TO/FROM	FUNCTION BLOCK
1, 23	GND, 21.4 MHz IF	A16, A18	I, G
2, 24	GND	A16	I
3, 25	GND	A16	I
4, 26	GND	A16	I
5, 27	GND, +15V	A16 REAR PANEL P1-29	I, I
6, 28	GND	A16	I
7, 29	GND, +10V	A16, A9	I, I
8, 30	GND, BW5	A16, A2	I, A
9, 31	GND, BW6	A16, A9	I, A
10, 32	GND, BW7	A16, A9	I, A
11, 33	GND	A16	I
12, 34	GND	A16	I
13, 35	GND	A16	I
14, 36	GND	A16	I
15, 37	GND	A16	I
16, 38	GND	A16	I
17, 39	GND	A16	I
18, 40	GND	A16	I
19, 41	GND	A16	I
20, 42	GND	A16	I
21, 43	GND	A16	I
22, 44	21.4 MHz IF, GND	A12, A16	H, I

SERIAL PREFIX: 2347A

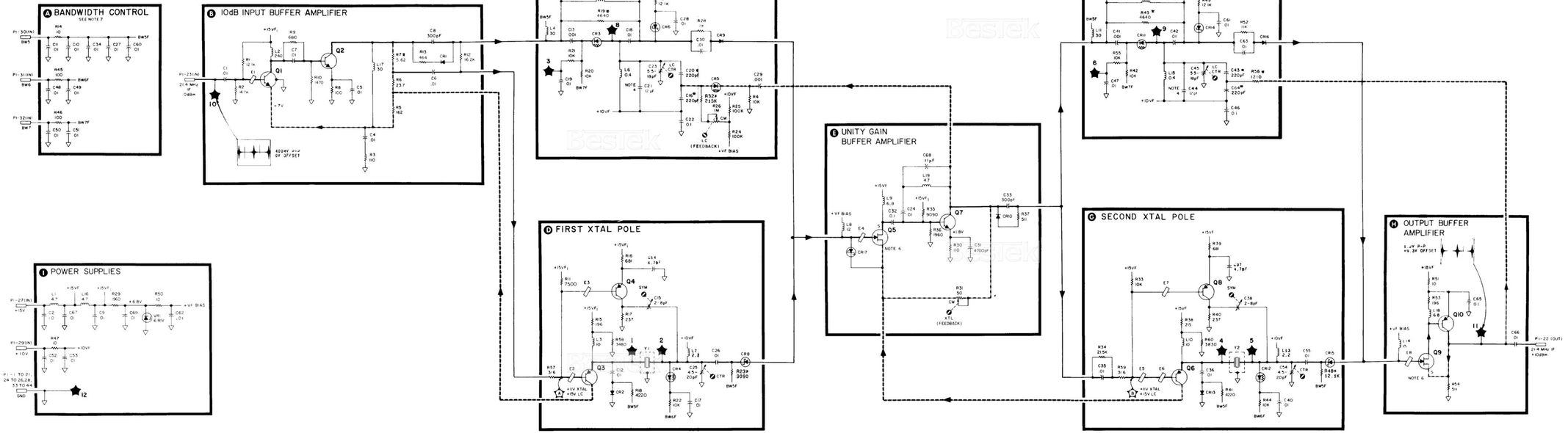

NOTES

1. REFERENCE DESIGNATORS WITHIN THIS ASSEMBLY ARE ABBREVIATED. PREFIX ABBREVIATION WITH ASSEMBLY NUMBER FOR COMPLETE REFERENCE DESIGNATOR.
2. UNLESS OTHERWISE INDICATED: RESISTANCE IN OHMS (Ω) CAPACITANCE IN MICROFARADS (μF) INDUCTANCE IN MICROHENRIES (μH)
3. REFER TO FIGURE 8-2 FOR MEASUREMENT CONDITIONS.
4. TEMPERATURE COMPENSATING CAPACITOR.
5. ASTERISK (*) DENOTES FACTORY SELECTED COMPONENT. NOMINAL VALUE IS SHOWN.
6. SOURCE VOLTAGE SHOULD BE 0.2V TO 1.5V GREATER THAN THE GATE VOLTAGE.
7. VOLTAGES SHOULD BE MEASURED WITH 1KΩ OR GREATER AT PROBE TIP TO PREVENT OSCILLATION AND ERRONEOUS READINGS.
8.

BANDWIDTH CONTROL LINES TYPICAL VALUES			
BANDWIDTH	BW5	BW6 XTAL	BW7 LC
3 MHz	+15	–4	+7
1 MHz	+15	–4	+9
300 kHz	+15	–4	+10
100 kHz	+15	–4	+14
30 kHz	–5	+10	+12
10 kHz	–5	+10	+14
3 kHz	–5	+9	+14
1 kHz	–5	+7	+15

9. DESIGNATES SHIELDING BEAD.
10. BW5, BW6, AND BW7 ARE BANDWIDTH CONTROL LINES.
11. TRANSISTOR PIN CONFIGURATIONS: (BOTTOM VIEW)

Q5, Q9

FIGURE 8-54. BANDWIDTH FILTER NO. 1 ASSEMBLY A11, BLOCK DIAGRAM

STEP GAIN ASSEMBLY A12, CIRCUIT DESCRIPTION

The Step Gain Assembly A12 provides from 0 to 50 dB amplification of the 21.4 MHz IF in 10 dB steps, as selected from the REFERENCE LEVEL control. A zero to – 12 dB REFERENCE LEVEL FINE attenuator control is also included on the front panel. Generated on the Step Gain Assembly A12 are the first mixer diode bias and a flatness control voltage proportional to the sweep plus tune (S + T) voltage.

Step Gain Amplifiers (E) (F) (G)

There are three step gain amplifiers, one 10 dB and two 20 dB, cascaded as shown in the schematic diagram. Full gain of any amplifier is selected by grounding the appropriate IFG line. The three step gain amplifiers can be considered as operational amplifiers. An equivalent circuit for the three stages is shown in Figure 8-57. The gain for each amplifier is: Gain = $1 + R_f/R_i$. The feedback resistance, R_f, for the 10 dB amplifier is R8, 562 ohms; for the 20 dB amplifiers it is R23 and R31, each 750 ohms. The input resistance, R_i, is a combination of a fixed series resistance (56.2 ohms) and the controlled resistance of the PIN diodes. The resistance of the PIN diodes is approximately 10 to 1000 ohms and increases as the forward bias current is decreased from 100 milliamperes to 1 microampere. The input resistance, R_i, for the 10 dB amplifier is approximately 260 ohms; for the 20 dB amplifiers, it is about 83 ohms.

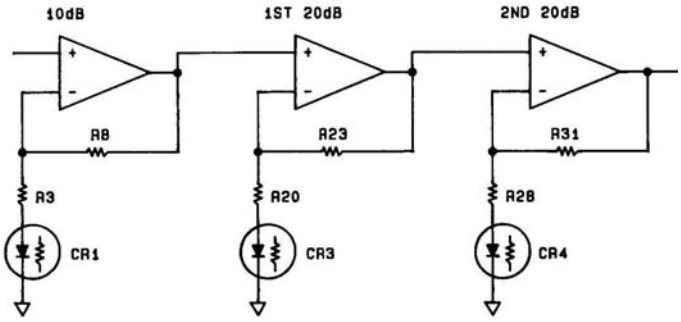

FIGURE 8-57. STEP GAIN AMPLIFIERS, SIMPLIFIED DIAGRAM

Selection of the correct combination of step gain amplifiers is accomplished with the REFERENCE LEVEL switch. Rotating the switch grounds the emitter circuit of the selected amplifier (or amplifiers), allowing current to flow through the PIN diode (or diodes). The possible switch combinations allow the gain to vary from unity (all switches open) to 50 dB maximum with all three emitter circuits grounded.

Test/Norm Switch. In the emitter paths of the 20 dB step gain amplifiers are the TEST/NORM switches used to disable both 20 dB amplifiers during log amplifier adjustment.

0 – 12 dB Control (H)

The REFERENCE LEVEL FINE control provides approximately 0.3 to 12.3 dB of attenuation at the base of Q6 in the 0 – 12 dB control circuit. By regulating the current flow through PIN diode CR7, the amount of signal attenuation is controlled. For example, if PIN diode current flow is increased, more RF signal is shunted or bypassed to ground. Capacitor C23 provides the RF ground path.

A minimum current flow through the PIN diode, which provides the maximum allowable diode resistance, is established by – 12 dB potentiometer R39 so that the diode is never completely cut off. Adjustment of R39 sets the 0.3 dB point and is adjusted with the REFERENCE LEVEL FINE control set fully clockwise (– 12 position).

The maximum current flow through the PIN diode is set with the 0 dB potentiometer R35. Resistor R35 is adjusted to the 12.3 dB attenuation point with the REFERENCE LEVEL FINE control set fully counterclockwise (0 position).

Transistors Q5 and Q7 are identical current sources. The maximum current is set with the 0 dB adjustment, R35, in the common base circuit. Diode CR5 provides temperature compensation for the transistors.

Transistor Q5 provides current for a bias voltage applied to the anode of the PIN diode. The voltage source consists of R39, R38, and CR6. Diode CR6 provides temperature compensation for the PIN diode. Inductor L8 isolates the diode current source from the RF signal.

Transistor Q7 provides current for a variable voltage source at the cathode of PIN diode CR7. Fixed resistor R40 is effectively in parallel with the negative side (–12.6V) of the REFERENCE LEVEL FINE control potentiometer. Its purpose is to match the FINE control to changes in the PIN diode resistance. The FINE control varies the voltage at the PIN diode cathode, this varies the diode current flow. When the FINE control is fully clockwise, the PIN diode is at minimum conduction and maximum signal is applied to the base of Q6. Conversely, when the FINE control is fully counterclockwise, the PIN diode is forward biased into maximum conduction and minimum signal is applied to Q6. Buffer amplifier Q6 operates as an emitter follower, providing isolation between the 0 – 12 dB control circuit and the 21.4 MHz bandpass filter.

21.4 MHz Bandpass Filter (I)

The 21.4 MHz Bandpass Filter at the output of the 0 – 12 dB control circuit is a two-pole type used to reduce the out-of-band noise produced by the step gain amplifiers and 0 – 12 dB control.

NOTE

For minimum step gain error, the ground plane on the Step Gain Assembly A12 must be firmly connected to the chassis extrusion and the Motherboard Assembly A16 common ground. This means that before you can make any step gain measurements or adjustments, the Step Gain Assembly A12 must be fully seated in its connector socket and all of its cover screws must be in place and tightened. You can, however, leave the gold secondary cover off for these measurements.

Band Select Decoder (A)

Band select decoder U3 is a 4-to-10 line decoder. It decodes the three band-select lines (H2, H3, and PM) to select one of six output lines. The selected line goes low while the remaining five lines stay high. The status of the decoder's outputs controls the tilt, offset, and bias circuits.

Band Tilt (C)

Band tilt is controlled with a variable, voltage-controlled voltage source comprising operational amplifier U4b, current boosting transistor Q2, and related adjustable resistor networks. The signal input to this circuit is the sweep plus tune (S + T) voltage. Normally, this signal is a ramp extending from +1.2V to +4.8V or some level in between, depending on the position of the FREQ SPAN/DIV and frequency TUNING controls.

When the S + T ramp is at its low point (+1.2V), the level at test point 3 should be +10.6V ±0.1V. When the S + T ramp is at its peak (+4.8V), the level at test point 3 can be adjusted from about +9.6V to +10.9V with the circuits's potentiometers and factory selected fixed resistors. Potentiometers R47, R48, R49, R51, R53, and R55 adjust the overall tilt for each band. Two factory selected resistors, R50 and R52, and potentiometers R54 and R56 provide additional tilt adjustment for harmonic mixing bands 2+, 2–, 3+, and 3– after a breakpoint at approximately midband.

Band Offset (D)

Operational amplifiers U4a, U4d, U4c, and their associated circuits provide offset and gain for the tilt voltage. Potentiometers R57, R58, R59, R60, R61, and R62 are used to adjust the offset of each band. A fixed negative offset is provided for all bands by operational amplifier U4c. The resulting flatness output voltage is applied to a voltage-controlled amplifier on Third Converter Assembly A10.

Mixer Diode Bias (B)

Bias of the First Mixer Assembly A4 depends on the desired harmonic mixing number. Quad switch U1 and operational amplifiers U2a, U2b, and U2c with their associated components form the mixer diode bias sources. Varying power levels are coupled into the mixer diode due to irregularities in the YTO's swept power output, causing variations in the mixer diode bias conduction angle, or total bias power. The bias sources adjust to these instantaneous changes in the mixer bias conduction angle by increasing or decreasing bias in order to maintain a constant conduction angle. The circuit includes separate bias adjustments for bands 2–, 2+, 3–, and 3+. Bands 1– and 1+ use a common bias adjustment potentiometer.

The four switches in U1 are normally closed, but the individual switches open when selected by a logic-high control voltage. Since the outputs from the band select decoder U3 are all high except one, the normal status of the switches in U1 is open until a low control input allows one to close. The switch then connects one of the three potentiometers (R70, R71, R72) through a factory selected fixed resistor to the positive input (pin 10) of operational amplifier U2c, forming a voltage source at that point. The table below shows which potentiometers and factory selected resistors apply to which band.

TABLE 8-9. MIXER DIODE BIAS ADJUSTMENTS

Band	Control Name	Bias Adjust Resistor	Range Adjust Resistor (Factory-Select)
.01–3	V1	R72	R73
6–9	V1	R72	R73
3–9	V2–	R83	R84
9–15	V2+	R87	R88
6–15	V3–	R71	R74
12.1–21	V3+	R70	R75

Operational amplifier U2c forms a negative impedance converter that increases or decreases bias as needed to maintain a constant angle of conduction at the first mixer. This is necessary to maintain a constant insertion loss through the first mixer. Operational amplifier U2c is connected to the voltage source at the junction of R73, R74, R75, and Q1. This circuit multiplies its input source resistance by approximately –1/110, thus converting the input voltage source and series resistance into an equivalent voltage source and negative impedance (here, approximately –1000 ohms).

Because of this conversion, as current increases in the circuit, the resultant output voltage decreases, just as it would if a negative resistance value (–R) were substituted for R in the familiar expression for Ohm's Law. The expression would then be rewritten as: E = I(–R). Notice now that an increase in current (I) results in a decrease in voltage (E). This is the equivalent action of this circuit. If all of U1's switches are open (as in band 2– or 2+), transistor Q1 forces the junction positive, turning off CR15 and thereby removing the negative impedance converter from the bias output at P1-24. One of the other operational amplifiers in U2 is activated, providing voltage sources and positive resistances to the bias output (TP1 or P1-24). When one of the operational amplifiers is selected, the diodes at the outputs of the other two are reverse biased, and disconnect the outputs from P1-24.

+5.1V Reference (K)

Transistor Q4 and its associated circuitry operate off the +15V supply to furnish a regulated +5.1V reference for the flatness and mixer diode bias circuit.

Power Supplies (J)

Extensive filtering of the +15V, +12V, and −12.6V inputs is needed to reduce coupling between each step gain amplifier and between the Step Gain Assembly A12 and the other assemblies.

STEP GAIN AMPLIFIER ASSEMBLY A12, TROUBLESHOOTING

CAUTION

Tubular ceramic capacitors will short to the aluminum extrusion if allowed to touch it during testing.

Always check the supply voltages. If the +15V supply drops (even slightly), the +5.1V Reference becomes unregulated.

Linear or Log Fidelity Errors: First readjust REFERENCE LEVEL FINE to the −12 dBm position and test again. If the problem is not present, gain compression may be occurring in one of the circuit's amplifiers. The 10 dB Amplifier (block E) is the most probable source, and improper biasing of CR1 is the most probable cause. Insufficient dc biasing of CR1 allows signal voltage to vary the bias, causing the stage gain to vary as the signal level varies. Diode CR1, not transistor saturation, is the most common cause of compression.

Reduction of the losses in the 0 – 12 dB Control (block H) allows the first amplifier stage to operate at a lower input level, thus reducing compression. To decrease the losses, hand-select CR7 and C23 for minimum circuit loss.

Poor Linearity of the 0 – 12 dB Control: The most probable cause is CR7.

TABLE 8-10. STEP GAIN ASSEMBLY A12, REPLACEABLE PARTS (1 OF 3)

Reference Designation	HP Part Number	CD	Qty	Description	Mfr Code	Mfr Part Number
A12	08559-60026	2	1	STEP GAIN ASSEMBLY	28480	08559-60026
A12C1	0160-2055	9	27	CAPACITOR-FXD .01UF +80-20% 100VDC CER	28480	0160-2055
A12C2	0160-3457	7	3	CAPACITOR-FXD 2000PF +-10% 250VDC CER	.0480	0160-3457
A12C3	0160-2055	9		CAPACITOR FXD .01UF +80-20% 100VDC CER	28480	0160-2055
A12C4	0180-0291	3	2	CAPACITOR FXD 1UF+-10% 35VDC TA	56289	150D105X9035A2
A12C5	0160-2055	9		CAPACITOR FXD .01UF +80-20% 100VDC CER	28480	0160-2055
A12C6	0160-2055	9		CAPACITOR-FXD .01UF +80-20% 100VDC CER	28480	0160-2055
A12C7	0160-2055	9		CAPACITOR-FXD .01UF +80-20% 100VDC CER	28480	0160-2055
A12C8	0160-2055	9		CAPACITOR-FXD .01UF +80-20% 100VDC CER	.0480	0160-2055
A12C9	0160-2055	9		CAPATSTOR FXD .01UF +80-20% 100VDC CER	28480	0160-2055
A12C10	0160-2055	9		CAPACITOR FXD .01UF +80-20% 100VDC CER	28480	0160-2055
A12C11	0160-2055	9		CAPACITOR-FXD .01UF +80-20% 100VDC CER	28480	0160-2055
A12C12	0160-2055	9		CAPACITOR-FXD .01UF +80-20% 100VDC CER	.11401	0160-2055
A12C13	0160-2055	9		CAPACITOR-FXD .01UF +80-20% 100VDC CER	28480	0160-2055
A12C14	0160-2055	9		CAPACITOR-FXD .01UF +80-20% 100VDC CER	2N40.1	0160-2055
A12C15	0160-2055	9		CAPACITOR-FXD .01UF +80-20% 100VDC CER	28480	0160-2055
A12C16	0160-3457	7		CAPACITOR-FXD 2000PF +-10% 250VDC CER	51400	0160-3457
A12C17	0160-2055	9		CAPACITOR-FXD .01UF +80-20% 100VDC CER	28480	0160-2055
A12C18	0160-2055	9		CAPACITOR-FXD .01UF +80-20% 100VDC CER	28480	0160-2055
A12C19	0160-3457	7		CAPACITOR-FXD 2000PF +-10% 250VDC CER	28480	0160-3457
A12C20	0160-2055	9		CAPACITOR-FXD .01UF +80-20% 100VDC CER	.0480	0160-2055
A12C21	0160-2055	9		CAPACITOR-FXD .01UF +80-20% 100VDC CER	28480	0160-2055
A12C22	0160-2055	9		CAPACITOR-FXD .01UF +80-20% 100VDC CER	.0480	0160-2055
A12C23	0180-0291	3		CAPACITOR-FXD 1UF+-10% 35VDC TA	56289	150D105X9035A2
A12C24	0160-2055	9		CAPACITOR-FXD .01UF +80-20% 100VDC CER	28480	0160-2055
A12C25	0160-2199	2		CAPACITOR-FXD 30PF +-5% 300VDC MICA	28480	0160-2199
A12C26*	0160-2199	2	2	CAPACITOR FXD 30PF +-5% 300VDC MICA	28480	0160-2199
A12C27	0160-2055	9		CAPACITOR-FXD .01UF +80-20% 100VDC CER	28480	0160-2055
A12C29	0160-2055	9		CAPACITOR-FXD .01UF +80-20% 100VDC CER	28480	0160-2055
A12C30	0160-2055	9		CAPACITOR FXD .01UF +80-20% 100VDC CER	28480	0160-2055
A12C31	0160-2055	9		CAPACITOR FXD .01UF +80-20% 100VDC CER	28480	0160-2055
A12C32	0160-2055	9		CAPACITOR-FXD .01UF +80-20% 100VDC CER	28480	0160-2055
A12C33	0160-2055	9		CAPACITOR-FXD .01UF +80-20% 100VDC CER	.0480	0160-2055
A12C34	0160-2055	9		CAPACITOR-FXD .01UF +80-20% 100VDC CER	28480	0160-2055
A12C35	0160-2055	9		CAPACITOR FXD .01UF +80-20% 100VDC CER	28480	0160-2055
A12C36	0160-0127	2	1	CAPACITOR-FXD 1UF +-20% 25VDC CER	28480	0160-0127
A12C40	0160-2250	6	3	CAPACITOR-FXD 5.1PF +-.25PF 500VDC CER	.0480	0160-2250
A12C41	0160-2250	6		CAPACITOR-FXD 5.1PF +-.25PF 500VDC CER	28480	0160-2250
A12C42	0160-2250	6		CAPACITOR-FXD 5.1PF +-.25PF 500VDC CER	.0480	0160-2250
A12CR1	1901-1070	9	4	DIODE-PIN 110V	28480	1901-1070
A12CR2	1901-0050	3	17	DIODE-SWITCHING 80V 200MA 2NS DO-35	28480	1901-0050
A12CR3	1901-1070	9		DIODE-PIN 110V	28480	1901-1070
A12CR4	1901-1070	9		DIODE-PIN 110V	.0480	1901-1070
A12CR5	1901-0050	3		DIODE-SWITCHING 80V 200MA 2NS DO-35	28480	1901-0050
A12CR6	1901-0050	3		DIODE SWITCHING 80V 200MA 2NS DO 35	28480	1901-0050
A12CR7	1901-1070	9		DIODE PIN 110V	28411O	1901-1070
A12CR8	1901-0050	3		DIODE SWITCHING 80V 200MA 2NS DO 35	28480	1901-0050
A12CR9	1901-0050	3		DIODE SWITCHING 80V 200MA 2NS DII-35	28480	1901-0050
A12CR10	1901-0050	3		DIODE SWITCHING 80V 200MA 2NS DO 15	28480	1901-0050
A12CR11	1901-0050	3		DIODE SWITCHING 80V 200MA 2NS DO 35	28480	1901-0050
A12CR12	1901-0050	3		DIODE SWITCHING 80V 200MA 2NS GO 15	28480	1901-0050
A12CR13	1901-0050	3		DIODE SWITCHING 80V 200MA 2NS DO 35	28480	1901-0050
A12CR14	1901-0050	3		DIODE SWITCHING 80V 200MA 2NS DO 35	PI1480	1901-0050
A12CR15	1901-0050	3		DIODE SWITCHING 80V 200MA 2NS DO 35	28480	1901-0050
A12CR16	1901-0050	3		DIODE-SWITCHING 80V 200MA 2NS DO-35	28480	1901-0050
A12CR17	1901-0050	3		DIODE SWITCHING 80V 200MA 2NS DO 35	28480	1901-0050
A12CR18	1901-0050	3		DIODE SWITCHING 80V 200MA 2NS DO 35	28480	1901-0050
A12CR19	1901-0050	3		DIODE SWITCHING 80V 200MA 2NS DO 35	28480	1901-0050
A12CR20	1901-0535	9	2	DIODE-SM SIG SCHOTTKY	70480	1901-0535
A12CR21	1901-0535	9		DIODE-SM SIC SCHOTTKY	28480	1901-0535
A12CR22	1901-0050	3		DIODE-SWITCHING 03V 200MA 2NS DO-35	28480	1901-0050
A12CR23	1901-0050	3		DIODE-SWITCHING 80V 200MA 2NS DO-35	28480	1901-0050
A12E1	9170-0029	3	3	CORE SHIELDING BEAD	28480	9170-0029
A12E2	9170-0029	3		CORE-SHIELDING BEAD	28480	9170-0029
A12E3	9170-0029	3		CORE SHIELDING BEAD	28480	9170-0029
A12L1	9140-0179	1	8	INDUCTOR RF-CH-MLD 22UH 10% .166DX.385LG	28480	9140-0179
A12L2	9140-0179	1		INDUCTOR RF-CH-MLD 22UH 10% .166DX.385LG	28480	9140-0179
A12L3	9140-0179	1		INDIJCTOR RF-CH MLD 22UH 10% .166DX.385LG	28480	9140-0179
A12L4	9140-0179	1		INDUCTOR RF CH-MLD 22UH 10% .166DX.385LG	28480	9140-0179
A12L5	9140-0179	1		INDUCTOR RF-CH MLD 22UH 10% .166DX.385LG	PO480	9140-0179

TABLE 8-10. STEP GAIN ASSEMBLY A12, REPLACEABLE PARTS (2 OF 3)

Reference Designation	HP Part Number	C D	Qty	Description	Mfr Code	Mfr Part Number
A12L6	9140-0179	1		INDUCTOR RF-CH-MLD 22UH 10% .166DX.385LG	28480	9140-0179
A12L7	9140-0179	1		INDUCTOR RF-CH-MLD 22UH 10% .166DX.385LG	28480	9140-0179
A12L8	9140-0179	1		INDUCTOR RF-CH-MLD 22UH 10% .166DX.385LG	28480	9140-0179
A12L9	9100-2260	1	1	INDUCTOR RF-CH-MLD 1.8UH 10% .105DX.26LG	28480	9100-2260
A12L10	9140-0158	6	1	INDUCTOR RF-CH-MLD 1UH 10% .105DX.26LG	28480	9140-0158
A12Q1	1853-0281	9	1	TRANSISTOR PNP 2N2907A SI TO-18 PD=400MW	04713	2N2907A
A12Q2	1854-0323	9	2	TRANSISTOR NPN SI TO-18 PD=360MW	28480	1854-0323
A12Q3	1854-0023	9		TRANSISTOR NPN SI TO-18 PD=360MW	28480	1854-0023
A12Q4	1854-0637	1	1	TRANSISTOR NPN 2N2219A SI TO-5 PD=800MW	31295	2N2219A
A12Q5	1853-0007	7	3	TRANSISTOR PNP 2N3251 SI TO-18 PD=360MW	04713	2N3251
A12Q6	1853-0007	7		TRANSISTOR PNP 2N3251 SI TO-18 PD=360MW	04713	2N3251
A12Q7	1853-0007	7		TRANSISTOR PNP 2N3251 SI TO-18 PD=360MW	04713	2N3251
A12Q8	1853-0015	7	3	TRANSISTOR PNP SI PD=200MW FT=500MHZ	28480	1853-0015
A12Q9	1854-0546	1	3	TRANSISTOR NPN SI TO-72 PD=200MW	28480	1854-0546
A12Q10	1853-0015	7		TRANSISTOR PNP SI PD=200MW FT=500MHZ	28480	1853-0015
A12Q11	1854-0546	1		TRANSISTOR NPN SI TO-72 PD=200MW	28480	1854-0546
A12Q12	1854-0546	1		TRANSISTOR NPN SI TO-72 PD=200MW	28480	1854-0546
A12Q13	1853-0015	7		TRANSISTOR PNP SI PD=200MW FT=500MHZ	28480	1853-0015
A12R1	0757-0279	0	4	RESISTOR 3.16K 1% .125W F TC=0+-100	24546	C4-1/8-T0-3161-F
A12R2	0698-3444	1	4	RESISTOR 316 1% .125W F TC=0+-100	24546	C4-1/8-T0-316R-F
A12R3	0757-0395	1	3	RESISTOR 56.2 1% .125W F TC=0+-100	24546	C4-1/8-T0-56R2-F
A12R4	0698-3162	0	1	RESISTOR 46.4K 1% .125W F TC=0+-100	24546	C4-1/8-T0-4642-F
A12R5	2100-3752	1	1	RESISTOR-TRMR 500K 10% C SIDE-ADJ 17-TRN	28480	2100-3752
A12R6	2100-3611	1	1	RESISTOR-TRMR 50K 10% C SIDE-ADJ 17-TRN	32997	3292X-1-503
A12R7	0757-0280	3	6	RESISTOR 1K 1% .125W F TC=0+-100	24546	C4-1/8-T0-1001-F
A12R8	0757-0417	8	1	RESISTOR 562 1% .125W F TC=0+-100	24546	C4-1/8-T0-5620-F
A12R9	0757-0280	3		RESISTOR 1K 1% .125W F TC=0+-100	24546	C4-1/8-T0-1001-F
A12R10	0698-3155	1	1	RESISTOR 4.64K 1% .125W F TC=0+-100	24546	C4-1/8-T0-4641-F
A12R11	0757-0465	6	2	RESISTOR 100K 1% .125W F TC=0+-100	24546	C4-1/8-T0-1003-F
A12R13	0757-0346	2		RESISTOR 10 1% .125W F TC=0+-100	24546	C4-1/8-T0-10R0-F
A12R14	0757-0346	2		RESISTOR 10 1% .125W F TC=0+-100	24546	C4-1/8-T0-10R0-F
A12R15	0757-0346	2		RESISTOR 10 1% .125W F TC=0+-100	24546	C4-1/8-T0-10R0-F
A12R16	0698-3433	8	2	RESISTOR 28.7 1% .125W F TC=0+-100	03888	PME55-1/8-T0-28R7-F
A12R17	0757-0279	0		RESISTOR 3.16K 1% .125W F TC=0+-100	24546	C4-1/8-T0-3161-F
A12R18	0698-3444	1		RESISTOR 316 1% .125W F TC=0+-100	24546	C4-1/8-T0-316R-F
A12R19	0698-3260	9	2	RESISTOR 464K 1% .125W F TC=0+-100	28480	0698-3260
A12R20	0757-0395	1		RESISTOR 56.2 1% .125W F TC=0+-100	24546	C4-1/8-T0-56R2-F
A12R21	2100-3056	8	3	RESISTOR-TRMR 5K 10% C SIDE-ADJ 17-TRN	02111	43P502
A12R22	0757-0280	3		RESISTOR 1K 1% .125W F TC=0+-100	24546	C4-1/8-T0-1001-F
A12R23	0757-0420	3	2	RESISTOR 750 1% .125W F TC=0+-100	24546	C4-1/8-T0-751-F
A12R24	0757-0280	3		RESISTOR 1K 1% .125W F TC=0+-100	24546	C4-1/8-T0-1001-F
A12R25	0757-0279	0		RESISTOR 3.16K 1% .125W F TC=0+-100	24546	C4-1/8-T0-3161-F
A12R26	0698-3444	1		RESISTOR 316 1% .125W F TC=0+-100	24546	C4-1/8-T0-316R-F
A12R27	0698-3260	9		RESISTOR 464K 1% .125W F TC=0+-100	28480	0698-3260
A12R28	0757-0395	1		RESISTOR 56.2 1% .125W F TC=0+-100	24546	C4-1/8-T0-56R2-F
A12R29	2100-3056	8		RESISTOR-TRMR 5K 10% C SIDE-ADJ 17-TRN	02111	43P502
A12R30	0757-0280	3		RESISTOR 1K 1% .125W F TC=0+-100	24546	C4-1/8-T0-1001-F
A12R31	0757-0420	3		RESISTOR 750 1% .125W F TC=0+-100	24546	C4-1/8-T0-751-F
A12R32	0757-0280	3		RESISTOR 1K 1% .125W F TC=0+-100	24546	C4-1/8-T0-1001-F
A12R33	0757-0288	1	4	RESISTOR 9.09K 1% .125W F TC=0+-100	19701	MF4C1/8-T0-9091-F
A12R34	0757-0279	0		RESISTOR 3.16K 1% .125W F TC=0+-100	24546	C4-1/8-T0-3161-F
A12R35	2100-3103	6	3	RESISTOR-TRMR 10K 10% C SIDE-ADJ 17-TRN	02111	43P103
A12R36	0757-0288	1		RESISTOR 9.09K 1% .125W F TC=0+-100	19701	MF4C1/8-T0-9091-F
A12R37	0698-3444	1		RESISTOR 316 1% .125W F TC=0+-100	24546	C4-1/8-T0-316R-F
A12R38	0757-0290	5	3	RESISTOR 6.19K 1% .125W F TC=0+-100	19701	MF4C1/8-T0-6191-F
A12R39	2100-3056	8		RESISTOR-TRMR 5K 10% C SIDE-ADJ 17-TRN	02111	43P502
A12R40	0698-3457	6	1	RESISTOR 316K 1% .125W F TC=0+-100	28480	0698-3457
A12R41	0698-3433	8		RESISTOR 28.7 1% .125W F TC=0+-100	03888	PME55-1/8-T0-28R7-F
A12R42	0757-0290	5		RESISTOR 6.19K 1% .125W F TC=0+-100	19701	MF4C1/8-T0-6191-F
A12R43	0757-1094	9	1	RESISTOR 1.47K 1% .125W F TC=0+-100	24546	C4-1/8-T0-1471-F
A12R44	0698-3440	7	1	RESISTOR 196 1% .125W F TC=0+-100	24546	C4-1/8-T0-196R-F
A12R45	0757-0441	8	2	RESISTOR 8.25K 1% .125W F TC=0+-100	24546	C4-1/8-T0-8251-F
A12R46	0698-3136	8	1	RESISTOR 17.8K 1% .125W F TC=0+-100	24546	C4-1/8-T0-1782-F
A12R47	2100-0670	6	3	RESISTOR-TRMR 10K 10% C SIDE-ADJ 17-TRN	32997	3292X-1-103
A12R48	2100-3103	6		RESISTOR-TRMR 10K 10% C SIDE-ADJ 17-TRN	02111	43P103
A12R49	2100-3750	9	3	RESISTOR-TRMR 20K 10% C SIDE-ADJ 17-TRN	28480	2100-3750
A12R50*	0757-0458	7	2	RESISTOR 51.1K 1% .125W F TC=0+-100	24546	C4-1/8-T0-5112-F
A12R51	2100-3750	9		RESISTOR-TRMR 20K 10% C SIDE-ADJ 17-TRN	28480	2100-3750
A12R52	0757-0458	7		RESISTOR 51.1K 1% .125W F TC=0+-100	24546	C4-1/8-T0-5112-F
A12R53	2100-3161	6	3	RESISTOR-TRMR 20K 10% C SIDE-ADJ 17-TRN	02111	43P203
A12R54	2100-3094	4	5	RESISTOR-TRMR 100K 10% C SIDE-ADJ 17-TRN	02111	43P104
A12R55	2100-3161	6		RESISTOR-TRMR 20K 10% C SIDE-ADJ 17-TRN	02111	43P203
A12R56	2100-3094	4		RESISTOR-TRMR 100K 10% C SIDE-ADJ 17-TRN	02111	43P104
A12R57	2100-0544	3	3	RESISTOR-TRMR 100K 10% C SIDE-ADJ 17-TRN	32997	3292X-1-104
A12R58	2100-3094	4		RESISTOR-TRMR 100K 10% C SIDE-ADJ 17-TRN	02111	43P104
A12R59	2100-3094	4		RESISTOR-TRMR 100K 10% C SIDE-ADJ 17-TRN	02111	43P104
A12R60	2100-0544	3		RESISTOR-TRMR 100K 10% C SIDE-ADJ 17-TRN	32997	3292X-1-104
A12R61	2100-0544	3		RESISTOR-TRMR 100K 10% C SIDE-ADJ 17-TRN	32997	3292X-1-104

TABLE 8-10. STEP GAIN ASSEMBLY A12, REPLACEABLE PARTS (3 OF 3)

Reference Designation	HP Part Number	C D	Qty	Description	Mfr Code	Mfr Part Number
A12R62	2100-3094	4		RESISTOR-TRMR 100K 10% C SIDE-ADJ 17-TRN	02111	43P104
A12R63	0698-3157	3	2	RESISTOR 19.6K 1% .125W F TC=0+-100	24546	C4-1/8-T0-1962-F
A12R64	0698-3157	3		RESISTOR 19.6K 1% .125W F TC=0+-100	24546	C4-1/8-T0-1962-F
A12R65	0757-0199	3	1	RESISTOR 21.5K 1% .125W F TC=0+-100	24546	C4-1/8-T0-2152-F
A12R66	0698-3266	5	1	RESISTOR 237K 1% .125W F TC=0+-100	24546	C4-1/8-T0-2373-F
A12R67	0757-0441	8		RESISTOR 8.25K 1% .125W F TC=0+-100	24546	C4-1/8-T0-8251-F
A12R68	0757-0462	3	1	RESISTOR 75K 1% .125W F TC=0+-100	24546	C4-1/8-T0-7502-F
A12R69	0698-0084	9	1	RESISTOR 2.15K 1% .125W F TC=0+-100	24546	C4-1/8-T0-2151-F
A12R70	2100-0670	6		RESISTOR-TRMR 10K 10% C SIDE-ADJ 17-TRN	32997	3292X-1-103
A12R71	2100-3103	6		RESISTOR-TRMR 10K 10% C SIDE-ADJ 17-TRN	02111	43P103
A12R72	2100-0670	6		RESISTOR-TRMR 10K 10% C SIDE-ADJ 17-TRN	32997	3292X-1-103
A12R73*	0757-0463	4	1	RESISTOR 82.5K 1% .125W F TC=0+-100	24546	C4-1/8-T0-8252-F
A12R74*	0757-0464	5	2	RESISTOR 90.9K 1% .125W F TC=0+-100	24546	C4-1/8-T0-9092-F
A12R75*	0757-0464	5		RESISTOR 90.9K 1% .125W F TC=0+-100	24546	C4-1/8-T0-9092-F
A12R76	0757-0442	9	2	RESISTOR 10K 1% .125W F TC=0+-100	24546	C4-1/8-T0-1002-F
A12R77	0757-0465	6		RESISTOR 100K 1% .125W F TC=0+-100	24546	C4-1/8-T0-1003-F
A12R78	0757-0401	0	1	RESISTOR 100 1% .125W F TC=0+-100	24546	C4-1/8-T0-101-F
A12R79	0757-0442	9		RESISTOR 10K 1% .125W F TC=0+-100	24546	C4-1/8-T0-1002-F
A12R80*	0757-0346	2	4	RESISTOR 10 1% .125W F TC=0+-100	24546	C4-1/8-T0-10R0-F
A12R81	0757-0288	1		RESISTOR 9.09K 1% .125W F TC=0+-100	19701	MF4C1/8-T0-9091-F
A12R82	0757-0443	0	2	RESISTOR 11K 1% .125W F TC=0+-100	24546	C4-1/8-T0-1102-F
A12R83	2100-3750	9		RESISTOR-TRMR 20K 10% C SIDE-ADJ 17-TRN	28480	2100-3750
A12R84*	0698-0083	8	3	RESISTOR 1.96K 1% .125W F TC=0+-100	24546	C4-1/8-T0-1961-F
A12R85	0757-0288	1		RESISTOR 9.09K 1% .125W F TC=0+-100	19701	MF4C1/8-T0-9091-F
A12R86	0757-0443	0		RESISTOR 11K 1% .125W F TC=0+-100	24546	C4-1/8-T0-1102-F
A12R87	2100-3161	6		RESISTOR-TRMR 20K 10% C SIDE-ADJ 17-TRN	02111	43P203
A12R88*	0698-0083	8		RESISTOR 1.96K 1% .125W F TC=0+-100	24546	C4-1/8-T0-1961-F
A12R89	0698-0083	8		RESISTOR 1.96K 1% .125W F TC=0+-100	24546	C4-1/8-T0-1961-F
A12R90	0757-0290	5		RESISTOR 6.19K 1% .125W F TC=0+-100	19701	MF4C1/8-T0-6191-F
A12S1	3101-1618	7	1	SWITCH-SL DPDT SUBMIN .5A 125VAC/DC PC	28480	3101-1618
A12TP1	1251-0600	0	9	CONNECTOR-SGL CONT PIN 1.14-MM-BSC-SZ SQ	28480	1251-0600
A12TP2	1251-0600	0		CONNECTOR-SGL CONT PIN 1.14-MM-BSC-SZ SQ	28480	1251-0600
A12TP3	1251-0600	0		CONNECTOR-SGL CONT PIN 1.14-MM-BSC-SZ SQ	28480	1251-0600
A12TP4	1251-0600	0		CONNECTOR-SGL CONT PIN 1.14-MM-BSC-SZ SQ	28480	1251-0600
A12TP5	1251-0600	0		CONNECTOR-SGL CONT PIN 1.14-MM-BSC-SZ SQ	28480	1251-0600
A12TP6	1251-0600	0		CONNECTOR-SGL CONT PIN 1.14-MM-BSC-SZ SQ	28480	1251-0600
A12TP7	1251-0600	0		CONNECTOR-SGL CONT PIN 1.14-MM-BSC-SZ SQ	28480	1251-0600
A12TP8	1251-0600	0		CONNECTOR-SGL CONT PIN 1.14-MM-BSC-SZ SQ	28480	1251-0600
A12TP9	0360-0077	5	1	TERMINAL-STUD SGL-TUR SWGFRM-MTG	28480	0360-0077
A12TP10	1251-0600	0		CONNECTOR-SGL CONT PIN 1.14-MM-BSC-SZ SQ	28480	1251-0600
A12U1	1826-0502	6	1	IC SWITCH ANLG QUAD 16-DIP-C PKG	27014	LF13201D
A12U2	1826-0161	7	2	IC OP AMP GP QUAD 14-DIP-P PKG	04713	MLM324P
A12U3	1820-1735	1	1	IC DCDR CMOS BCD-TO-DEC 4-TO-10-LINE	27014	MM74C42N
A12U4	1826-0161	7		IC OP AMP GP QUAD 14-DIP-P PKG	04713	MLM324P
A12U5	1810-0208	0	1	NETWORK-RES 8-SIP68.0K OHM X 7	01121	208A683
A12U6	1810-0206	8	2	NETWORK-RES 8-SIP10.0K OHM X 7	01121	206A103
A12U7	1810-0206	8		NETWORK-RES 8-SIP10.0K OHM X 7	01121	206A103
A12VR1	1902-3070	5	4	DIODE-ZNR 4.22V 5% DO-35 PD=.4W	28480	1902-3070
A12VR2	1902-3070	5		DIODE-ZNR 4.22V 5% DO-35 PD=.4W	28480	1902-3070
A12VR3	1902-3070	5		DIODE-ZNR 4.22V 5% DO-35 PD=.4W	28480	1902-3070
A12VR4	1902-3070	5		DIODE-ZNR 4.22V 5% DO-35 PD=.4W	28480	1902-3070
A12VR5	1902-3094	3	1	DIODE-ZNR 5.11V 2% DO-35 PD=.4W	28480	1902-3094
				A12 MISCELLANEOUS PARTS		
	2200-0101	0	1	SCREW-MACH 4-40 .188-IN-LG PAN-HD-POZI	28480	2200-0101
	08559-00008	4	1	COVER, STEP GAIN	28480	08559-00008
	86701-40001	9	2	EXTRACTOR, PC	28480	86701-40001
	08559-20044	0	1	PLATE, CAUTION	28480	08559-20044
	2510-0278	9	2	SCREW-MACH 8-32 .125-IN-LG PAN-HD-SLT	28480	2510-0278

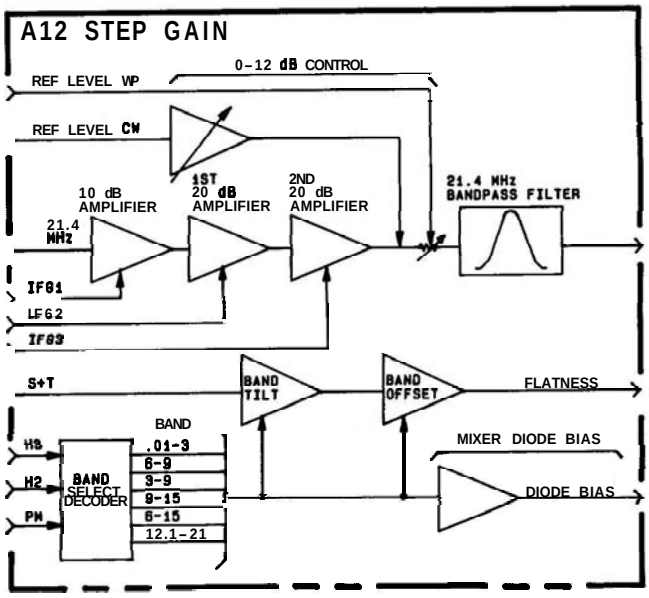

FIGURE 8-58. STEP GAIN ASSEMBLY A12, BLOCK DIAGRAM

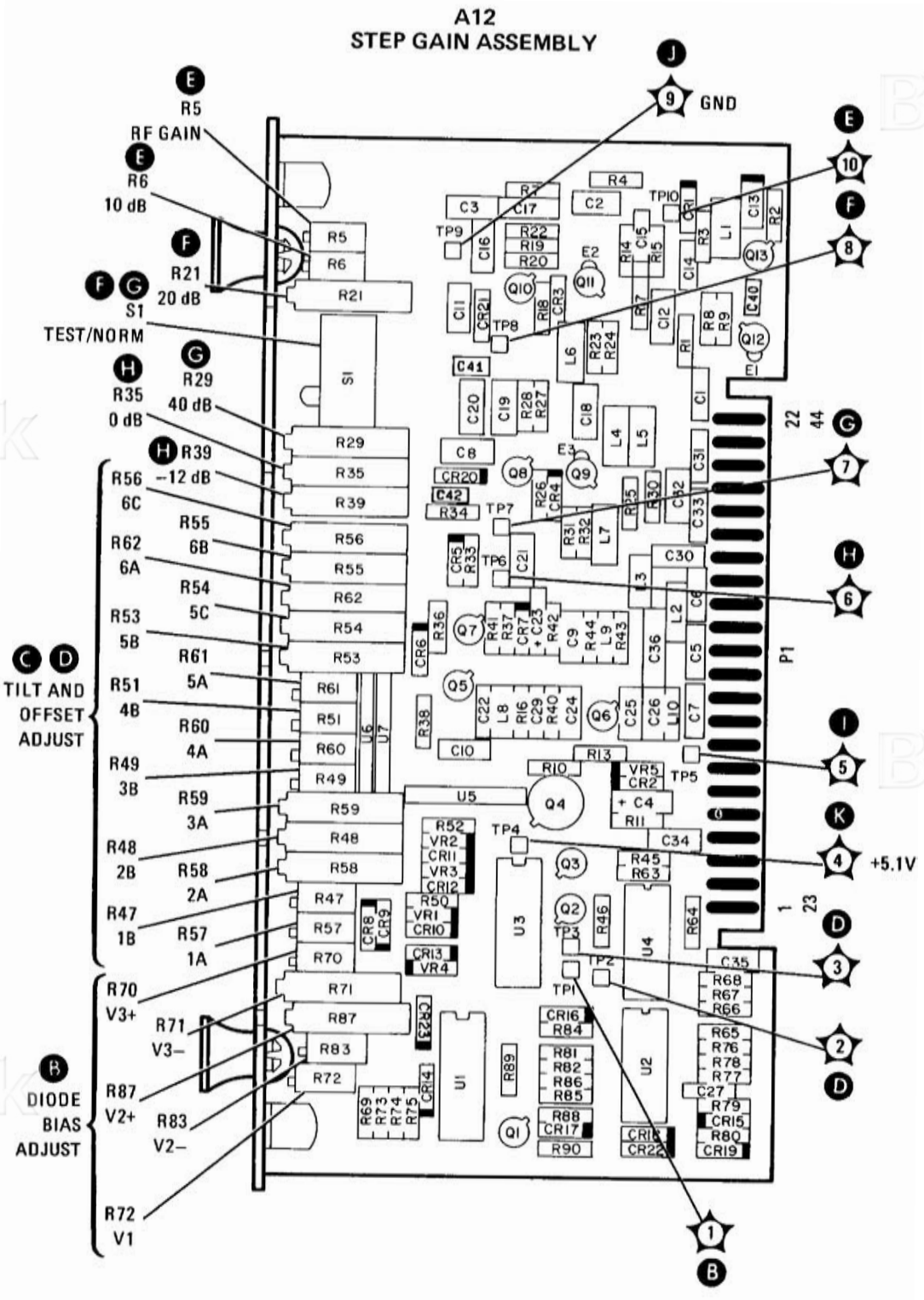

FIGURE 8-59. STEP GAIN ASSEMBLY A12, COMPONENT LOCATIONS

A12 STEP GAIN ASSEMBLY
08559-60026 (1 OF 2)

P1

PIN	SIGNAL	TO/FROM	FUNCTION BLOCK
1 23	NC S+T	A7	C
2 24	FLATNESS DIODE BIAS	A10 A4	D B
3 25	H3 H2	A2 A2	A A
4 26	PM GND	A2 A16	A J
5 27	GND 21.4 MHz IF	A16 A13	J I
6 28	GND	A16	J
7 29	GND	A16	J
8 30	GND	A16	J
9 31	GND	A16	J
10 32	GND -12.6V	A16 REAR PANEL	J J
11 33	GND +15V	A16 REAR PANEL	J J
12 34	GND RF LEVEL IRF	A16 A2	J H
13 35	GND +10V	A16 A9	J J
14 36	GND	A16	J
15 37	GND	A16	J
16 38	GND RF LEVEL CW	A16 A2	J H
17 39	GND IFG3	A16 A2	J G
18 40	GND IFG2	A16 A2	J E
19 41	GND	A16	J
20 42	GND IFG1	A16 A2	J E
21 43	GND	A16	J
22 44	GND 21.4 MHz IF	A16 A11	J E

A12 STEP GAIN ASSEMBLY
08559-60026 (2 OF 2)

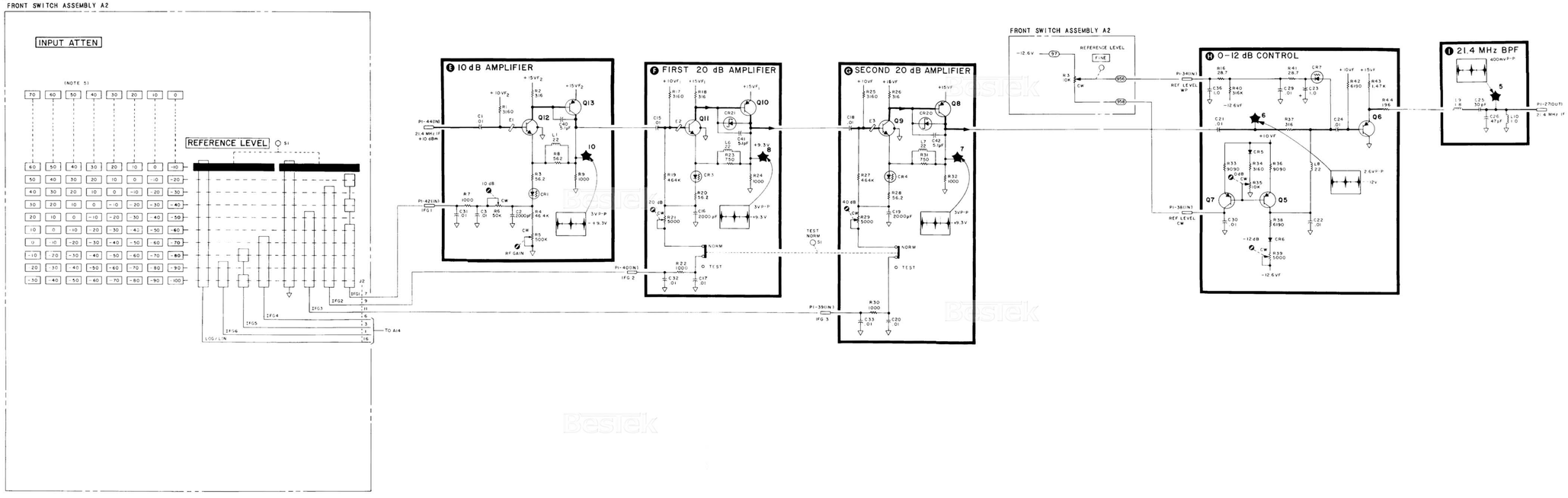

NOTES:

1. REFERENCE DESIGNATORS WITHIN THIS ASSEMBLY ARE ABBREVIATED. PREFIX ASSREVIATION WITH ASSEMBLY NUMBER FOR COMPLETE REFERENCE DESIGNATOR.
2. UNLESS OTHERWISE INDICATED: RESISTANCE IN OHMS (Ω) CAPACITANCE IN MICROFARADS (μF) INDUCTANCE IN MICROHENRIES (μH)
3. ASTERISK (*) INDICATES FACTORY SELECTED COMPONENT. VALUE SHOWN IS TYPICAL.
4. INPUT ATTEN AND REFERENCE LEVEL CONTROLS ARE MECHANICALLY COUPLED TO PROVIDE TEN REFERENCE LEVEL SETTINGS FOR EACH INPUT ATTENUATION SETTING.
5. U2D (PINS 12, 13, and 14) IS NOT USED. ONE INPUT (PIN 13) IS CONNECTED TO THE OUTPUT (PIN 14) AND THE OTHER INPUT IS GROUNDED.
6. MNEMONIC TABLE

MNEMONIC	DESCRIPTION
H2	LOW-SECOND HARMONIC BAND
H3	LOW-THIRD HARMONIC BAND
PM	SELECT PLUS OR MINUS HARMONIC CONVERSION
S+T	SWEEP PLUS TUNE VOLTAGE

7. R50* AND R52* MIGHT NOT BE PRESENT ON PC BOARD.

BANDWIDTH FILTER No. 2 ASSEMBLY A13

Bandwidth Filter No. 2 Assembly A13 is very similar to Bandwidth Filter No. 1 Assembly A11, and corresponding components have the same reference designators. The differences between the two assemblies are in the TO/FROM designations listed on the schematic diagrams. Refer to the Bandwidth Filter No. 1 Assembly A11 circuit description for complete information on circuit operation.

TABLE 8-11. BANDWIDTH FILTER NO. 2 ASSEMBLY A13, REPLACEABLE PARTS (1 OF 3)

Reference Designation	HP Part Number	C D	Qty	Description	Mfr Code	Mfr Part Number
A13	08559-60058	0	1	BANDWIDTH FILTER NO. 2 ASSEMBLY	28480	08559-60058
A13C1	0160-2055	9	38	CAPACITOR-FXD .01UF +80-20% 100VDC CER	28480	0160-2055
A13C2	0160-0127	2	1	CAPACITOR-FXD 1UF +-20% 25VDC CER	28480	0160-0127
A13C4	0160-2055	9		CAPACITOR-FXD .01UF +80-20% 100VDC CER	28480	0160-2055
A13C5	0160-2055	9		CAPACITOR-FXD .01UF +80-20% 100VDC CER	28480	0160-2055
A13C6	0160-2055	9		CAPACITOR-FXD .01UF +80-20% 100VDC CER	28480	0160-2055
A13C7	0160-2055	9		CAPACITOR-FXD .01UF +80-20% 100VDC CER	28480	0160-2055
A13C8	0160-2207	3	2	CAPACITOR-FXD 300PF +-5% 300VDC MICA	28480	0160-2207
A13C9	0160-2055	9		CAPACITOR-FXD .01UF +80-20% 100VDC CER	28480	0160-2055
A13C10	0160-2055	9		CAPACITOR-FXD .01UF +80-20% 100VDC CER	28480	0160-2055
A13C11	0160-2055	9		CAPACITOR-FXD .01UF +80-20% 100VDC CER	28480	0160-2055
A13C12	0160-2055	9		CAPACITOR-FXD .01UF +80-20% 100VDC CER	28480	0160-2055
A13C13	0160-3456	6	3	CAPACITOR-FXD 1000PF +-10% 1KVDC CER	28480	0160-3456
A13C14	0160-2249	3	2	CAPACITOR-FXD 4.7PF +-.25PF 500VDC CER	28480	0160-2249
A13C15	0121-0059	7	2	CAPACITOR-V TRMR-CER 2-8PF 350V PC-MTG	52763	304324 2/8PF NPO
A13C16*	0160-0134	1	4	CAPACITOR-FXD 220PF +-5% 300VDC MICA	28480	0160-0134
A13C17	0160-2055	9		CAPACITOR-FXD .01UF +80-20% 100VDC CER	28480	0160-2055
A13C18	0160-2055	9		CAPACITOR-FXD .01UF +80-20% 100VDC CER	28480	0160-2055
A13C19	0160-2055	9		CAPACITOR-FXD .01UF +80-20% 100VDC CER	28480	0160-2055
A13C20*	0160-0134	1		CAPACITOR-FXD 220PF +-5% 300VDC MICA	28480	0160-0134
A13C21	0160-0437	7	2	CAPACITOR-FXD 12PF +-5% 500VDC CER	28480	0160-0437
A13C22	0160-4084	8	3	CAPACITOR-FXD .1UF +-20% 50VDC CER	28480	0160-4084
A13C23	0121-0036	0	2	CAPACITOR-V TRMR-CER 5.5-18PF 350V	52763	304324 5.5/18PF NPO
A13C24	0160-2055	9		CAPACITOR-FXD .01UF +80-20% 100VDC CER	28480	0160-2055
A13C25	0121-0446	6	2	CAPACITOR-V TRMR-CER 4.5-20PF 160V	28480	0121-0446
A13C26	0160-2055	9		CAPACITOR-FXD .01UF +80-20% 100VDC CER	28480	0160-2055
A13C27	0160-2055	9		CAPACITOR-FXD .01UF +80-20% 100VDC CER	28480	0160-2055
A13C28	0160-2055	9		CAPACITOR-FXD .01UF +80-20% 100VDC CER	28480	0160-2055
A13C29	0160-3456	6		CAPACITOR-FXD 1000PF +-10% 1KVDC CER	28480	0160-3456
A13C30	0160-2055	9		CAPACITOR-FXD .01UF +80-20% 100VDC CER	28480	0160-2055
A13C31	0160-4290	6	1	CAPACITOR-FXD 4700PF +-20% 250VDC CER	56289	C067F251H472MS22-CDH
A13C32	0160-4084	8		CAPACITOR-FXD .1UF +-20% 50VDC CER	28480	0160-4084
A13C33	0160-2207	3		CAPACITOR-FXD 300PF +-5% 300VDC MICA	28480	0160-2207
A13C34	0160-2055	9		CAPACITOR-FXD .01UF +80-20% 100VDC CER	28480	0160-2055
A13C35	0160-2055	9		CAPACITOR-FXD .01UF +80-20% 100VDC CER	28480	0160-2055
A13C36	0160-2055	9		CAPACITOR-FXD .01UF +80-20% 100VDC CER	28480	0160-2055
A13C37	0160-2249	3		CAPACITOR-FXD 4.7PF +-.25PF 500VDC CER	28480	0160-2249
A13C38	0121-0059	7		CAPACITOR-V TRMR-CER 2-8PF 350V PC-MTG	52763	304324 2/8PF NPO
A13C40	0160-2055	9		CAPACITOR-FXD .01UF +80-20% 100VDC CER	28480	0160-2055
A13C41	0160-3456	6		CAPACITOR-FXD 1000PF +-10% 1KVDC CER	28480	0160-3456
A13C42	0160-2055	9		CAPACITOR-FXD .01UF +80-20% 100VDC CER	28480	0160-2055
A13C43*	0160-0134	1		CAPACITOR-FXD 220PF +-5% 300VDC MICA	28480	0160-0134
A13C44	0160-0437	7		CAPACITOR-FXD 12PF +-5% 500VDC CER	28480	0160-0437
A13C45	0121-0036	0		CAPACITOR-V TRMR-CER 5.5-18PF 350V	52763	304324 5.5/18PF NPO
A13C46	0160-4084	8		CAPACITOR-FXD .1UF +-20% 50VDC CER	28480	0160-4084
A13C47	0160-2055	9		CAPACITOR-FXD .01UF +80-20% 100VDC CER	28480	0160-2055
A13C48	0160-2055	9		CAPACITOR-FXD .01UF +80-20% 100VDC CER	28480	0160-2055
A13C49	0160-2055	9		CAPACITOR-FXD .01UF +80-20% 100VDC CER	28480	0160-2055
A13C50	0160-2055	9		CAPACITOR-FXD .01UF +80-20% 100VDC CER	28480	0160-2055
A13C51	0160-2055	9		CAPACITOR-FXD .01UF +80-20% 100VDC CER	28480	0160-2055
A13C52	0160-2055	9		CAPACITOR-FXD .01UF +80-20% 100VDC CER	28480	0160-2055
A13C53	0160-2055	9		CAPACITOR-FXD .01UF +80-20% 100VDC CER	28480	0160-2055
A13C54	0121-0446	6		CAPACITOR-V TRMR-CER 4.5-20PF 160V	28480	0121-0446
A13C55	0160-2055	9		CAPACITOR-FXD .01UF +80-20% 100VDC CER	28480	0160-2055
A13C60	0160-2055	9		CAPACITOR-FXD .01UF +80-20% 100VDC CER	28480	0160-2055
A13C61	0160-2055	9		CAPACITOR-FXD .01UF +80-20% 100VDC CER	28480	0160-2055
A13C62	0160-2055	9		CAPACITOR-FXD .01UF +80-20% 100VDC CER	28480	0160-2055
A13C63	0160-2055	9		CAPACITOR-FXD .01UF +80-20% 100VDC CER	28480	0160-2055
A13C64*	0160-0134	1		CAPACITOR-FXD 220PF +-5% 300VDC MICA	28480	0160-0134
A13C65	0160-2055	9		CAPACITOR-FXD .01UF +80-20% 100VDC CER	28480	0160-2055
A13C66	0160-2055	9		CAPACITOR-FXD .01UF +80-20% 100VDC CER	28480	0160-2055
A13C67	0160-2055	9		CAPACITOR-FXD .01UF +80-20% 100VDC CER	28480	0160-2055
A13C68	0160-2258	4	1	CAPACITOR-FXD 11PF +-5% 500VDC CER 0+-30	28480	0160-2258
A13C69	0160-2055	9		CAPACITOR-FXD .01UF +80-20% 100VDC CER	28480	0160-2055
A13C73	0121-0452	4	2	CAPACITOR-V TRMR-AIR 1.3-5.4PF 175V	74970	187-0103-028
A13C74	0121-0452	4		CAPACITOR-V TRMR-AIR 1.3-5.4PF 175V	74970	187-0103-028
A13CR1	1901-0047	8	6	DIODE-SWITCHING 20V 75MA 10NS	28480	1901-0047
A13CR2	1901-0047	8		DIODE-SWITCHING 20V 75MA 10NS	28480	1901-0047
A13CR3	1901-1070	9	5	DIODE-PIN 110V	28480	1901-1070
A13CR4	1901-1070	9		DIODE-PIN 110V	28480	1901-1070
A13CR5	1901-1070	9		DIODE-PIN 110V	28480	1901-1070

TABLE 8-11. BANDWIDTH FILTER NO. 2 ASSEMBLY A13, REPLACEABLE PARTS (2 OF 3)

Reference Designation	HP Part Number	CD	Qty	Description	Mfr Code	Mfr Part Number
A13CR6	1931-0535	9	5	DIODE-SM SIG SCHOTTKY	28480	1931-0535
A13CR8	1901-0535	9		DIODE-SM SIG SCHOTTKY	28480	1901-0535
A13CR9	1901-0047	8		DIODE-SWITCHING 20V 75MA 10NS	28480	1931-0047
A13CR10	1901-0047	8		DIODE SWITCHING 20V 75MA 10NS	28480	1901-0047
A13CR11	1931-1070	9		DIODE PJN 110V	28480	1931-1070
A13CR12	1901-1070	9		DIODE-PIN 110V	28480	1901-1070
A13CR13	1931-0047	8		DIODE-SWITCHING 20V 75MA 10NS	28480	1931-0047
A13CR14	1901-0535	9		DIODE-SM SIG SCHOTTKY	28480	1901-0535
A13CR15	1931-0535	9		DIODE-SM SIG SCHOTTKY	28480	1931-0535
A13CR16	1901-0047	8		DIODE-SWITCHING 20V 75MA 10NS	28480	1901-0047
A13CR17	1901-0535	9		DIODE-SM SIG SCHOTTKY	28480	1931-0535
A13E1	9170-0029	3	8	CORE-SHIELDING BEAD	28480	9170-0029
A13E2	9170-0029	3		CORE-SHIELDING BEAD	28480	9170-0029
A13E3	9170-0029	3		CORE-SHIELDING BEAD	28480	9170-0029
A13E4	9170-0029	3		CORE-SHIELDING BEAD	28480	9170-0029
A13E5	9170-0029	3		CORE-SHIELDING BEAD	28480	9170-0029
A13E6	9170-0029	3		CORE-SHIELDING BEAD	28480	9170-0029
A13E7	9170-0029	3		CORE-SHIELDING BEAD	28480	9170-0029
A13E8	9170-0029	3		CORE-SHIELDING BEAD	28480	9170-0029
A13L1	9140-0112	2	1	INDUCTOR RF-CH-MLD 4.7UH 10%	28480	9140-0112
A13L2	9100-1641	0	1	INDUCTOR RF-CH-MLD 240UH 5% .166DX.385LG	28480	9100-1641
A13L3	9140-0114	4	2	INDUCTOR RF-CH-MLD 10UH 10% .166DX.385LG	28480	9140-0114
A13L4	9100-1624	9	3	INDUCTOR RF-CH-MLD 30UH 5% .166DX.385LG	28480	9100-1624
A13L5	9140-0179	1	2	INDUCTOR RF-CH-MLD 22UH 10% .166DX.385LG	28480	9140-0179
A13L6	9100-2813	0	2	INDUCTOR 400NH 10% .312DX1.016LG Q=150	28480	9100-2813
A13L7	9140-0399	7	2	INDUCTOR RF-CH-MLD 2.2UH 5% .166DX.385LG	28480	9140-0399
A13L8	9140-0178	0	1	INDUCTOR RF-CH-MLD 12UH 10% .166DX.385LG	28480	9140-0178
A13L9	9100-1619	2	2	INDUCTOR RF-CH-MLD 6.8UH 10%	28480	9100-1619
A13L10	9140-0114	4		INDUCTOR RF-CH-MLD 10UH 10% .166DX.385LG	28480	9140-0114
A13L11	9100-1624	9		INDUCTOR RF-CH-MLD 30UH 5% .166DX.385LG	28480	9100-1624
A13L12	9140-0179	1		INDUCTOR RF-CH-MLD 22UH 10% .166DX.385LG	28480	9140-0179
A13L13	9140-0399	7		INDUCTOR RF-CH-MLD 2.2UH 5% .166DX.385LG	28480	9140-0399
A13L14	9100-1620	5	1	INDUCTOR RF-CH-MLD 15UH 10% .166DX.385LG	28480	9100-1620
A13L15	9100-2813	0		INDUCTOR 400NH 10% .312DX1.016LG Q=150	28480	9100-2813
A13L16	9140-0144	0	2	INDUCTOR RF-CH-MLD 4.7UH 10% .105DX.26LG	28480	9140-0144
A13L17	9100-1624	9		INDUCTOR RF-CH-MLD 30UH 5% .166DX.385LG	28480	9100-1624
A13L18	9100-1619	2		INDUCTOR RF-CH-MLD 6.8UH 10%	28480	9100-1619
A13L19	9140-0144	0		INDUCTOR RF-CH-MLD 4.7UH 10% .105DX.26LG	28480	9140-0144
A13Q1	1854-0345	8	1	TRANSISTOR NPN 2N5179 SI TO-72 PD=200MW	04713	2N5179
A13Q2	1854-0404	0	2	TRANSISTOR NPN SI TO-18 PD=360MW	28480	1854-0404
A13Q3	1853-0037	7	5	TRANSISTOR PNP 2N3251 SI TO-18 PD=360MW	04713	2N3251
A13Q4	1853-0007	7		TRANSISTOR PNP 2N3251 SI TO-18 PD=360MW	04713	2N3251
A13Q5	1855-0267	5	2	TRANSISTOR J-FET N-CHAN D-MODE TO-92 SI	28480	1855-0267
A13Q6	1853-0007	7		TRANSISTOR PNP 2N3251 SI TO-18 PD=360MW	04713	2N3251
A13Q7	1854-0404	0		TRANSISTOR NPN SI TO-18 PD=360MW	28480	1854-0404
A13Q8	1853-0007	7		TRANSISTOR PNP 2N3251 SI TO-18 PD=360MW	04713	2N3251
A13Q9	1855-0267	5		TRANSISTOR J-FET N-CHAN D-MODE TO-92 SI	28480	1855-0267
A13Q10	1853-0007	7		TRANSISTOR PNP 2N3251 SI TO 18 PD=360MW	04713	2N3251
A13R1	0757-0444	1		RESISTOR 12.1K 1% .125W F TC=0+-100	24546	C4-1/8-T0-1212-F
A13R2	0698-3156	2	1	RESISTOR 14.7K 1% .125W F TC=0+-100	24546	C4-1/8-T0-1472-F
A13R3	0757-0402	1	2	RESISTOR 110 1% .125W F TC=0+-100	24546	C4-1/8-T0-111-F
A13R4	0757-0442	9	8	RESISTOR 10K 1% .125W F TC=0+-100	24546	C4-1/8-T0-1002-F
A13R5	0757-0405	4	1	RESISTOR 162 1% .125W F TC=0+-100	24546	C4-1/8-T0-162R-F
A13R6	0698-3431	6	1	RESISTOR 23.7 1% .125W F TC=0+-100	03888	PME55-1/8-T0-23R7-F
A13R7*	0698-8821	8	1	RESISTOR 5.62 1% .125W F TC=0+-100	28480	0698-8821
A13R8	0757-0401	0	3	RCSISTOR 100 1% .125W F TC=0+-100	24546	C4-1/8-T0-101-F
A13R9	0757-0439	4	1	RESISTOR 6.81K 1% .125W F TC=0+-100	24546	C4-1/8-T0-6811-F
A13R10	0757-1094	9	1	RESISTOR 1.47K 1% .125W F TC=0+-100	24546	C4-1/8-T0-1471-F
A13R11	0757-0440	7	1	RESISTOR 7.5K 1% .125W F TC=0+-100	24546	C4-1/8-T0-7501-F
A13R12	0757-0447	4	1	RESISTOR 16.2K 1% .125W F TC=0+-100	24546	C4-1/8-T0-1622-F
A13R13	0698-0082	7	1	RESISTOR 464 1% .125W F TC=0+-100	24546	C4-1/8-T0-4640-F
A13R14	0757-0346	2	4	RESISTOR 10 1% .125W F TC=0+-100	24546	C4-1/8-T0-10R0-F
A13R15	0698-3440	7	2	RESISTOR 196 1% .125W F TC=0+-100	24546	C4-1/8-T0-196R-F
A13R16	0757-0419	0	2	RESISTOR 681 1% .125W F TC=0+-100	24546	C4-1/8-T0-681R-F
A13R17	0698-3442	9	2	RESISTOR 237 1% .125W F TC=0+-100	24546	C4-1/8-T0-237R-F
A13R18	0698-3154	0	2	RESISTOR 4.22K 1% .125W F TC=0+-100	24546	C4-1/8-T0-4221-F
A13R19*	0698-3155	1	2	RESISTOR 4.64K 1% .125W F TC=0+-100	24546	C4-1/8-T0-4641-F
A13R20	0757-0442	9		RCSISTOR 10K 1% .125W F TC=0+-100	24546	C4-1/8-T0-1002-F
A13R21	0757-0442	9		RESISTOR 10K 1% .125W F TC=0+-100	24546	C4-1/8-T0-1002-F
A13R22	0757-0442	9		RESISTOR 10K 1% .125W F TC=0+-100	24546	C4-1/8-T0-1002-F
A13R23	0757-0442	9		RESISTOR 10K 1% .125W F TC=0+-100	24546	C4-1/8-T0-1002-F
A13R23*	0757-0288	1	2	RESISTOR 9.09K 1% .125W F TC=0+-100	19701	MF4C1/8-T0-9091-F
A13R24	0757-0465	6	2	RESISTOR 100K 1% .125W F TC=0+-100	24546	C4-1/8-T0-1003-F

TABLE 8-11. BANDWIDTH FILTER NO. 2 ASSEMBLY A13, REPLACEABLE PARTS (3 OF 3)

Reference Designation	HP Part Number	C D	Qty	Description	Mfr Code	Mfr Part Number
A13R25	0757-0465	A		RESISTOR 100K 1% .125W F TC=0+-100	24546	C4-1/8-T0-1003-F
A13R26	2100-3163	B	1	RESISTOR-TRMR 1M 20% C SIDE-ADJ 17-TRN	02111	43P105
A13R27	0757-0444	C		RESISTOR 12.1K 1% .125W F TC=0+-100	24546	C4-1/8-T0-1212-F
A13R28	0757-0443	D	2	RESISTOR 11K 1% .125W F TC=0+-100	24546	C4-1/8-T0-1102-F
A13R29	0698-0083	E	2	RESISTOR 1.96K 1% .125W F TC=0+-100	24546	C4-1/8-T0-1961-F
A13R30	0757-0402	F		RESISTOR 110 1% .125W F TC=0+-100	24546	C4-1/8-T0-111-F
A13R31	2100-3052	G	1	RESISTOR-TRMR 50 10% C SIDE-ADJ 17-TRN	02111	43P500
A13R32	0698-3454	H	1	RESISTOR 215K 1% .125W F TC=0+-100	24546	C4-1/8-T0-2153-F
A13R34	0757-0199	I	1	RESISTOR 21.5K 1% .125W F TC=0+-100	24546	C4-1/8-T0-2152-F
A13R35	0757-0288	J		RESISTOR 9.09K 1% .125W F TC=0+-100	19701	MF4C1/8-T0-9091-F
A13R36	0698-0083	K		RESISTOR 1.96K 1% .125W F TC=0+-100	24546	C4-1/8-T0-1961-F
A13R37	0757-0416	L	2	RESISTOR 511 1% .125W F TC=0+-100	24546	C4-1/8-T0-511R-F
A13R38	0698-3441	M	1	RESISTOR 215 1% .125W F TC=0+-100	24546	C4-1/8-T0-215R-F
A13R39	0757-0419	N		RESISTOR 681 1% .125W F TC=0+-100	24546	C4-1/8-T0-681R-F
A13R40	0698-3442	P		RESISTOR 237 1% .125W F TC=0+-100	24546	C4-1/8-T0-237R-F
A13R41	0698-3154	Q		RESISTOR 4.22K 1% .125W F TC=0+-100	24546	C4-1/8-T0-4221-F
A13R42	0757-0442	R		RESISTOR 10K 1% .125W F TC=0+-100	24546	C4-1/8-T0-1002-F
A13R43*	0698-3155	S		RESISTOR 4.64K 1% .125W F TC=0+-100	24546	C4-1/8-T0-4641-F
A13R44	0757-0442	T		RESISTOR 10K 1% .125W F TC=0+-100	24546	C4-1/8-T0-1002-F
A13R45	0757-0401	U		RESISTOR 100 1% .125W F TC=0+-100	24546	C4-1/8-T0-101-F
A13R46	0757-0401	V		RESISTOR 100 1% .125W F TC=0+-100	24546	C4-1/8-T0-101-F
A13R47	0757-0346	W		RESISTOR 10 1% .125W F TC=0+-100	24546	C4-1/8-T0-10R0-F
A13R48	0757-0444	X	4	RESISTOR 12.1K 1% .125W F TC=0+-100	24546	C4-1/8-T0-1212-F
A13R49	0757-0444	Y		RESISTOR 12.1K 1% .125W F TC=0+-100	24546	C4-1/8-T0-1212-F
A13R50	0757-0346	Z		RESISTOR 10 1% .125W F TC=0+-100	24546	C4-1/8-T0-10R0-F
A13R51	0757-0346	2		RESISTOR 10 1% .125W F TC=0+-100	24546	C4-1/8-T0-10R0-F
A13R52	0757-0443	3		RESISTOR 11K 1% .125W F TC=0+-100	24546	C4-1/8-T0-1102-F
A13R53	0698-3440	7		RESISTOR 196 1% .125W F TC=0+-100	24546	C4-1/8-T0-196R-F
A13R54	0757-0416	7		RESISTOR 511 1% .125W F TC=0+-100	24546	C4-1/8-T0-511R-F
A13R55	0757-0442	9		RESISTOR 10K 1% .125W F TC=0+-100	24546	C4-1/8-T0-1002-F
A13R56	0757-0274	5	1	RESISTOR 1 21K 1% .125W F TC=0+-100	24546	C4-1/8-T0-1211-F
A13R57	0757-0180	2	2	RESISTOR 3 16 1% .125W F TC=0+-100	28480	0757-0180
A13R58	0698-3152	8	1	RESISTOR 3 48K 1% .125W F TC=0+-100	24546	C4-1/8-T0-3481-F
A13R59	0757-0180	2		RESISTOR 3 16 1% .125W F TC=0+-100	28480	0757-0180
A13R60	0698-3153	9	1	RESISTOR 3 83K 1% .125W F TC=0+-100	24546	C4-1/8-T0-3831-F
A13TP1	0360-1788	&	4	CONNECTOR-SGL CONT PIN .045-IN-BSC-SZ SQ	28480	0360-1788
A13TP2	0360-1788	a		CONNECTOR-SGL CONT PIN .045-IN-BSC-SZ SQ	28480	0360-1788
A13TP3	1251-0600	b	7	CONNECTOR-SGL CONT PIN 1.14-MM-BSC SZ SQ	28480	1251-0600
A13TP4	0360-1788	c		CONNECTOR-SGL CONT PIN .045 IN-BSC-SZ SQ	28480	0360-1788
A13TP5	0360-1708	d		CONNECTOR-SGL CONT PIN .045 IN-BSC SZ SQ	28480	0360-1788
A13TP6	1251-0600	e		CONNECTOR-SGL CONT PIN 1.14-MM-BSC SZ SQ	28480	1251-0600
A13TP8	1251-0600	f		CONNECTOR-SGL CONT PIN 1.14-MM-BSC SZ SQ	28480	1251-0600
A13TP9	1251-0600	g		CONNECTOR-SGL CONT PIN 1.14-MM-BSC SZ SQ	28480	1251-0600
A13TP10	1251-0600	h		CONNECTOR-SGL CONT PIN 1.14-MM-BSC SZ SQ	28480	1251-0600
A13TP11	1251-0600	i		CONNECTOR-SGL CONT PIN 1.14-MM-BSC SZ SQ	28480	1251-0600
A13TP12	1251-0600	j		CONNECTOR-SGL CONT PIN 1.14-MM-BSC-SZ SQ	20480	1251-0600
A13VR1	1902-0048	k	1	DIODE-ZNR 6.81V 5% DO-35 PD=.4W	28480	1902-0048
A13Y1	0410-0776	l	2	CRYSTAL-QUARTZ 21.4 MHZ HC-25/U-HLDR	28480	0410-0776
A13Z2	0410-0776	m		CRYSTAL-QUARTZ 21.4 MHZ HC-25/U-HLDR	28480	0410-0776
				A13 MISCELLANEOUS PARTS		
	0403-0026	n	1	PLUG-HOLE BDR-HD FOR .187 D-HOLE NYL	02760	87-120241-05 0101
	08559-00025	o	1	BAFFLE INDUCTOR	28480	08559-00025
	08559-00009	p	1	COVER, BW FILTER NO. 2	28480	8559-00009

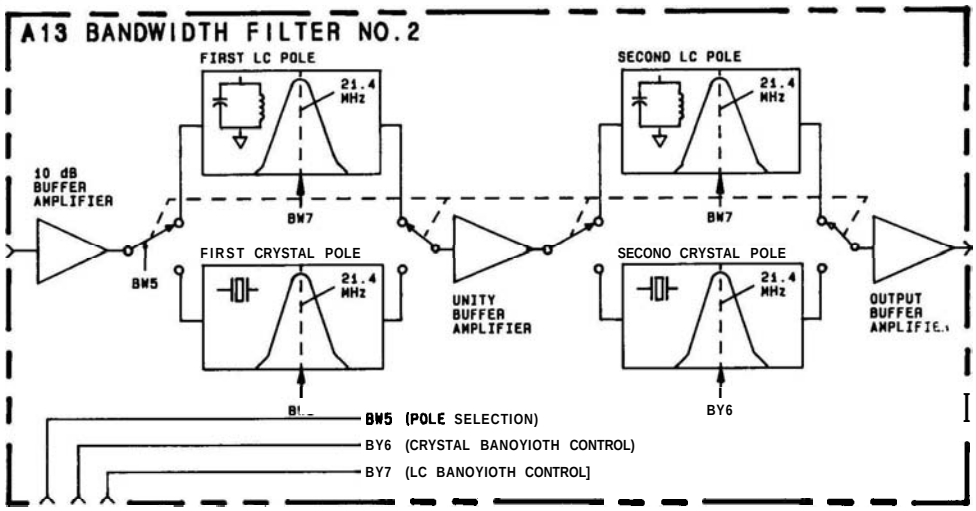

FIGURE 8-61. BANDWIDTH FILTER NO. 2 ASSEMBLY A13, BLOCK DIAGRAM

A13
BANDWIDTH FILTER NO. 2 ASSEMBLY

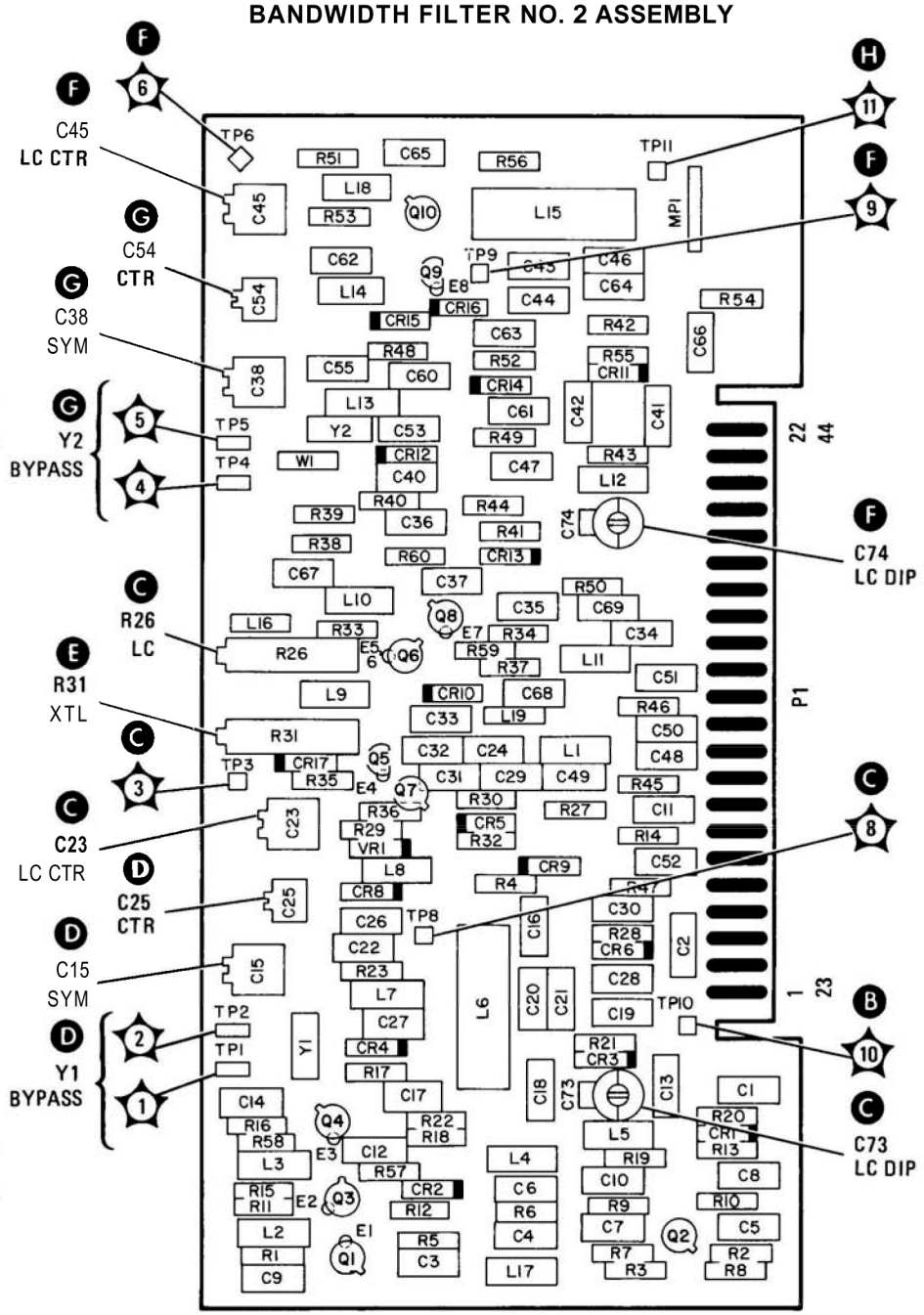

FIGURE 8-62. BANDWIDTH FILTER NO. 2 ASSEMBLY A13, COMPONENT LOCATIONS

A13 BANDWIDTH FILTER NO. 2 ASSEMBLY
08559-60058

P1

PIN	SIGNAL	TO/FROM	FUNCTION BLOCK
1 23	GND 21.4 MHz IF	A18 A12	I B
2 24	GND	A18	I
3 25	GND	A18	I
4 26	GND	A18	I
5 27	GND +15V	A18 P1-25	I I
6 28	GND	A18	I
7 29	GND +10V	A18 A8	I I
8 30	GND BW5	A18 A2	I A
9 31	GND BW6	A18 A3	I A
10 32	GND BW7	A18 A9	I A
11 33	GND	A18	I
12 34	GND	A18	I
13 35	GND	A18	I
14 36	GND	A18	I
15 37	GND	A18	I
16 38	GND	A18	I
17 39	GND	A18	I
18 40	GND	A18	I
19 41	GND	A18	I
20 42	GND	A18	I
21 43	GND	A18	I
22 44	21.4 MHz IF GND	A14 A18	H I

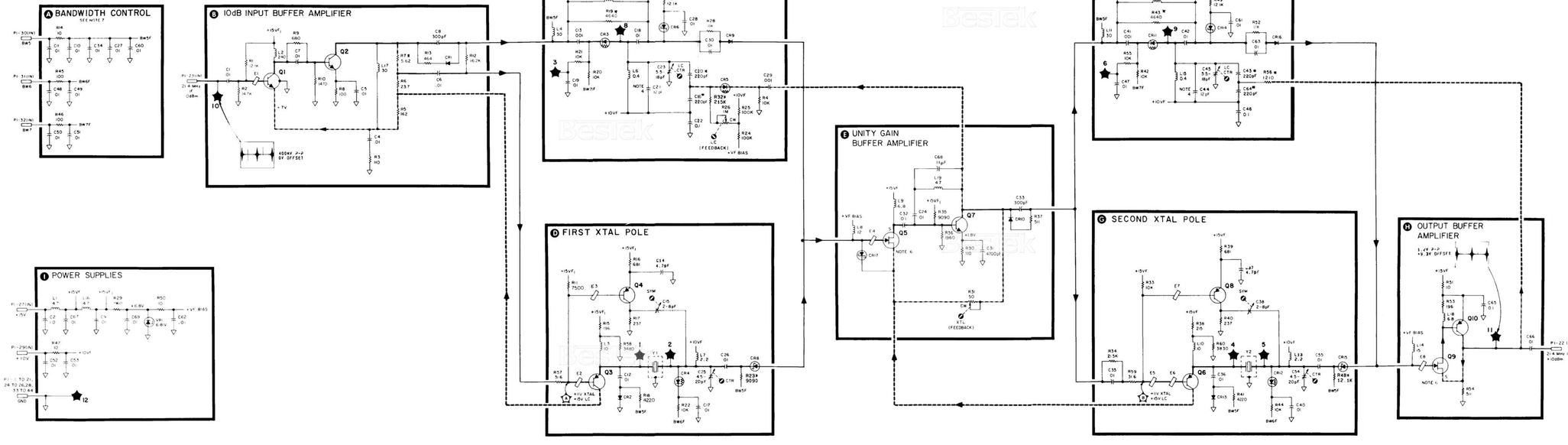

NOTES

1. REFERENCE DESIGNATORS WITHIN THIS ASSEMBLY ARE ABBREVIATED. PREFIX ABBREVIATION WITH ASSEMBLY NUMBER FOR COMPLETE REFERENCE DESIGNATOR.
2. UNLESS OTHERWISE INDICATED: RESISTANCE IN OHMS (Ω) CAPACITANCE IN MICROFARADS (μF) INDUCTANCE IN MICROHENRIES (μH)
3. REFER TO FIGURE 8-2 FOR MEASUREMENT CONDITIONS.
4. TEMPERATURE COMPENSATING CAPACITOR.
5. ASTERISK (*) DENOTES FACTORY SELECTED COMPONENT. NOMINAL VALUE IS SHOWN.
6. SOURCE VOLTAGE SHOULD BE 0.2V TO 1.5V GREATER THAN THE GATE VOLTAGE.
7. VOLTAGES SHOULD BE MEASURED WITH 1KΩ OR GREATER AT PROBE TIP TO PREVENT OSCILLATION AND ERRONEOUS READINGS.
8.

BANDWIDTH CONTROL LINES TYPICAL VALUES			
BANDWIDTH	BW5	BW6 XTAL	BW7 LC
3 MHz	+15	–4	+7
1 MHz	+15	–4	+9
300 kHz	+15	–4	+10
100 kHz	+15	–4	+14
30 kHz	–.5	+10	+12
10 kHz	–.5	+10	+14
3 kHz	–.5	+9	+14
1 kHz	–.5	+7	+15

9. DESIGNATES SHIELDING BEAD.
10. BW5, BW6, AND BW7 ARE BANDWIDTH CONTROL LINES.
11. TRANSISTOR PIN CONFIGURATIONS: (BOTTOM VIEW)

Q5, Q9

A13

FIGURE 8-63. BANDWIDTH FILTER NO. 2 ASSEMBLY A13, SCHEMATIC DIAGRAM

8-165/8-166

SERIAL PREFIX: 2347A

LOG AMPLIFIER ASSEMBLY A14, CIRCUIT DESCRIPTION

The Log Amplifier Assembly A14 includes seven amplifier stages, each capable of providing linear and logarithmic amplification. A detector circuit following the amplifier stages detects the amplified 21.4 **MHz** IF signal, producing the vertical display signal. The offset circuit that follows the detector operates in Log mode to offset the vertical display signal in 100 mV steps. This steps the display in four 10-dB increments of apparent gain and adds the last 40 dB of displayed step gain to the gain (50 dB) already provided in the IF section.

Amplifier Stages (1st through 7th) (A) (C) (D) (E) (F) (G) (H)

The seven amplifier stages are similar in operation. Different stages are selected as linear or log amplifiers, depending on the setting of the Amplitude Scale switch.

Log Mode of Operation. In Log mode, the gain of the seven amplifier stages is sequentially limited as the signal level increases. Limiting starts with stage seven, since it sees the combined gains of the other stages, and continues sequentially as the signal level increases. Stage one is the last stage to begin limiting the signal. The total limiting process provides 70 dB of log display range. Each stage consists of an emitter follower voltage-driver and a common-base amplifier in which the gain is signal-level dependent. Increases in signal level decrease the gain.

A simplified schematic of a typical log stage (the second stage) is shown in Figure 8-64. In Log mode, the LOG/LIN control line is high (about +15V); Q24 is on, forward biasing diodes CR10 and CR11 and the log diodes in all of the other stages. Diodes CR10 and CR11 are Schottky diodes with a forward bias voltage of approximately 0.4V. Emitter follower Q13 is a voltage source that develops signal current flow through CR10 and CR11. This signal-current drives Q20, a common-base amplifier tuned to approximately 21.4 **MHz.** The gain of this amplifier is set by the ratio of R52 to the total resistance, R_T, between the emitters of Q13 and 420 (primarily the resistance of CR10 and CR11). The formula for computing the gain in dB is:

$$\text{Gain (dB)} = 20\text{LOG}(1 + R52/R_T)$$

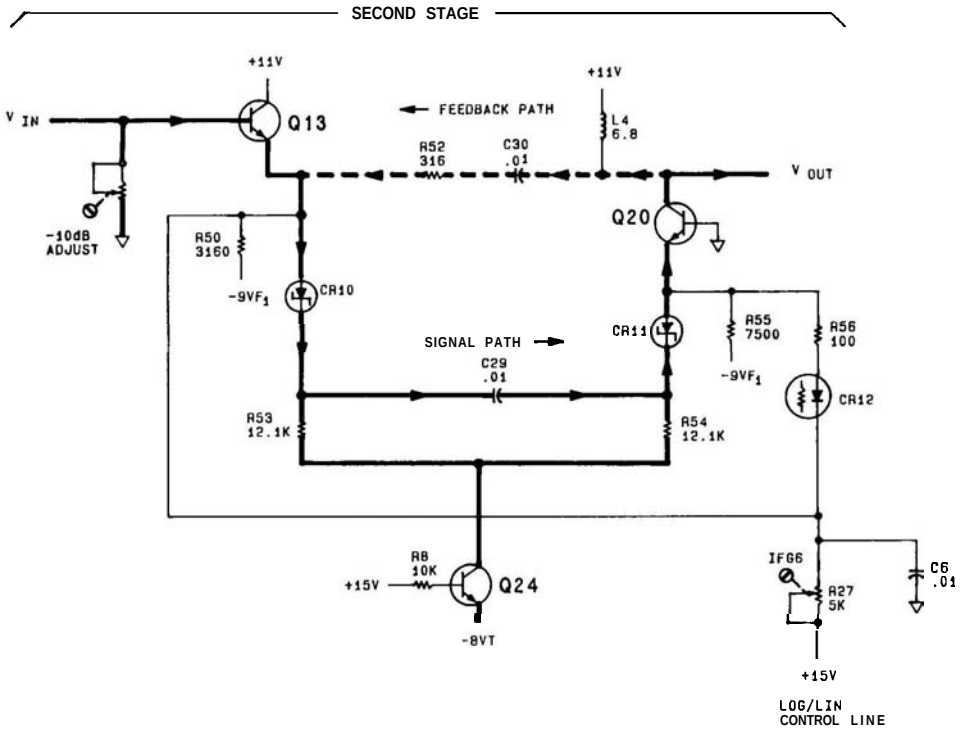

FIGURE 8-64. LOG MODE OPERATION, SIMPLIFIED SCHEMATIC

Resistance R_T is at a minimum (approximately 150 ohms) for small signals. The small signal gain of the stage (about 10 dB) is established by the dc bias through the log diodes. As the signal level at the emitter of Q13 increases, signal current cancels bias current in the log diodes, increasing R_T. The gain of the stage for large signals is reduced to unity (0 dB) as R_T becomes very large.

Linear Mode of Operation. Two simplified schematics illustrating unity and 10 dB gain of a typical linear stage are shown in Figures 8-65 and 8-66. In linear mode, the signal level dependent components are removed from the signal path and a linear display is provided. The −8 VT is applied to the base of Q24, turning it off. This removes dc bias from CR10 and CR11. Total resistance R_T (primarily the resistance of R56 and CR12) is high, since CR12 is reverse-biased. Control line IFG6 is high and the stage gain is near unity. The signal flow is through emitter follower Q13 and R52, to 420. In stages six and seven, an alternate signal path is used to fix the gain at about 5 dB per stage, allowing for scale differences between Log and Lin modes. Both stages are activated by the −8 VT from the Amplitude Scale switch through R34, R93, R101, CR25, and CR28. The combined stage gain is adjusted by R34 (LIN), which controls the dc PIN diode bias.

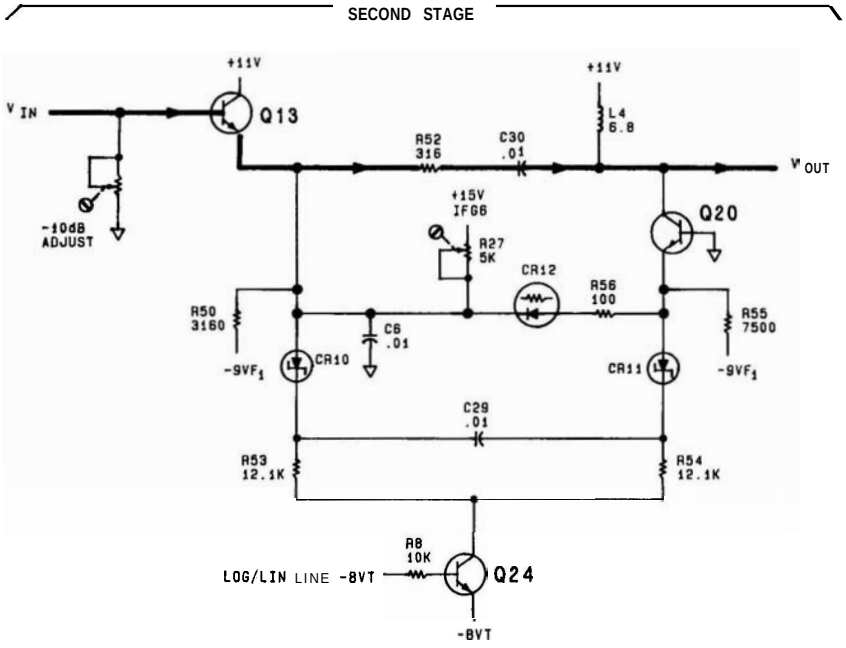

FIGURE 8-65. UNITY GAIN OPERATION IN LINEAR MODE, SIMPLIFIED SCHEMATIC

Stage 2, 3, 4, and 5 each have an alternate signal path that switches in 10 dB of step gain for a total of 40 dB. The alternate path is selected by the REFERENCE LEVEL control. With the INPUT ATTEN at 0 dB and the REFERENCE LEVEL control at −60 dBm, the −8 VT is routed, via the IF gain control line (IFG4), to forward bias CR22 in stage 5. For each stepped increase in the REFERENCE LEVEL control, the −8 VT activates the IFG lines associated with the stages of gain required, forward biasing the diodes in the signal path. Each IFG line has a potentiometer (block B) that controls the line's bias current and the stage gain. Note that IFG6 controls two stages (stages 2 and 3) that, when switched in, provide 20 dB of gain.

Gain Control Lines (B)

The +15V (in Log mode) or the −8 VT (in Lin mode) is routed through the REFERENCE LEVEL switch to the combination of IFG4, IFG5, and IFG6 corresponding to the reference level selected. In Log mode, the Log Offset circuit is activated through R24, R25, and R26. The LOG/LIN line is at +15V, Q24 is saturated, and the

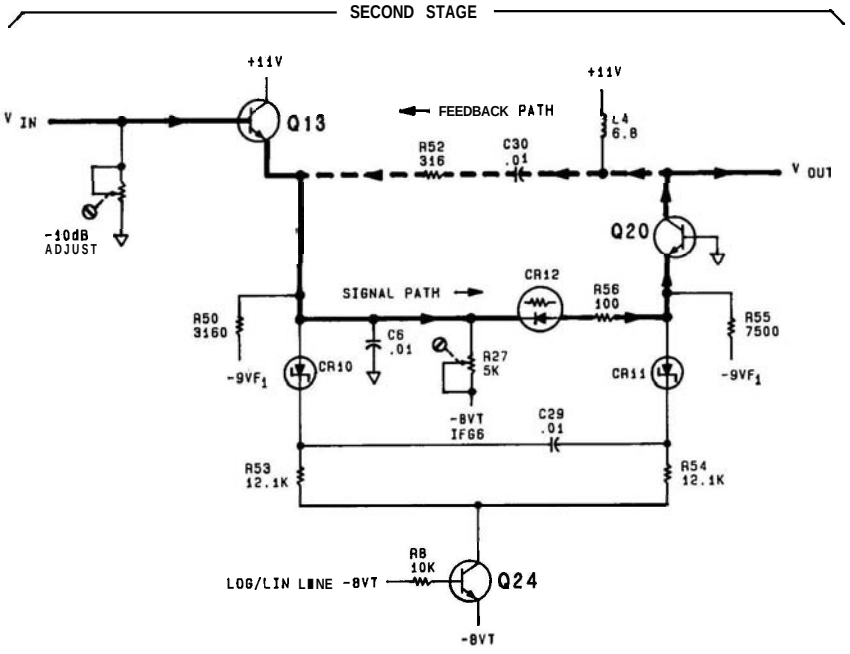

FIGURE 8-66. 10 dB GAIN OPERATION IN LINEAR MODE, SIMPLIFIED SCHEMATIC

collector of Q24 goes to −8 VT, turning the log diodes on. In Lin mode, the LOG/LIN line is at −8 VT, Q24 is turned off and current flows through R34 (LIN) to stages 6 and 7.

Log Mode Temperature-Controlled Variable-Gain Amplifier (J)

In Lin mode, when approximately 700 mV rms (+10 dBm) is applied to the input of the Log amplifier, the voltage at the output of stage 7 (TP5) is about 1.5 rms. With the same input in Log mode, the output at TP5 is about 2.0V rms. To maintain an equal relationship with maximum input signal (the trace at top display), the output in Log mode must be attenuated. This attenuation is achieved with variable gain amplifier 47, the gain of which is determined by the ratio of its collector load to its emitter load.

In Lin mode, the LOG/LIN line is a −8 VT, CR4 is forward biased, and the output of U2b (TP1) is approximately +15V. Diode CR29 is reverse biased and the gain of the variable gain amplifier is R104/R105 (100/316) or approximately 0.3. In Log mode, the LOG/LIN line is at +15V, CR4 is reverse biased, and the output of U2b (TP1) is about −0.45V. Diode CR29 is forward biased and exhibits an ac resistance of about 100 ohms. This resistance is in parallel with the 100 ohms of R104 for a total of 50 ohms. Since the collector load of 47 is about 50 ohms, the gain becomes 0.15 (50/316). This gain depends upon the resistance of CR29, which is established by SLOPE adjustment R23.

Detector (K)

The detector comprises a voltage-to-current converter, a half-wave rectifier, and a low-pass filter. The output of the variable gain amplifier is applied to 46, where voltage variations are converted to current variations. Transistor Q5 acts as a current driver for half-wave rectifier Q4, while CR1 biases 44 just below cutoff. When the signal is positive going, Q4 conducts; during the negative half-cycle, Q4 is cutoff. The detector's output goes to the low-pass filter, a series of pi-section filters that smooth the detector's output and remove RF signal components.

Buffer Amplifier (L)

The detector's output, the video signal, is amplified by the Buffer Amplifier. Differential pair 421 and driver 422 approximate a noninverting operational amplifier with a gain calculated by the formula:

$$\text{Gain} = 1 + \text{R110/R116}$$

Which becomes:

$$1 + 619/619 = 2$$

Log Offset (M)

The offset circuit operates in Log mode to offset the video signal in four 100 mV steps. These appear on the display as 10 dB steps of apparent gain. This gain adds the last 40 dB of display step gain to the 50 dB of gain already provided by the Step Gain Assembly A12. The offset is provided by Q23 operating as a current source that steps the current through R119. When the Log mode is selected, +15V via the REFERENCE LEVEL switch can be applied to IF gain control lines IFG4, IFG5, and IFG6. When an IFG line is activated, the associated log-shift diode (CR31, CR32, or CR33) is forward biased, causing current (determined by R123, R124, or R125) to flow in Q23. Each IFG line supplies a specific offset when activated; IFG4 and IFG5 each provide 100 mV, while IFG6 provides 200 mV. The LOG GAIN adjustment (R121) establishes the operating point of Q23 as needed for 100 mV steps.

Temperature Compensation Power Supply (I)

Temperature compensating of the Log Amplifier Assembly A14 is provided by the −8 VT (both VT and VTV mean Volts Temperature Variable) and −1 VTV regulators while CR2 operates as the temperature-sensing element. Temperature variations cause diode voltage changes that, when amplified by U1a, regulate the −8 VT supply. Since the −1 VTV supply is coupled to the −8 VT supply through R17 and R132, its output is also temperature variable. The −8 VT provides bias for the log diodes in Log mode, and bias current for CR12, CR19, CR22, and CR28 in Lin mode. The −1 VTV supplies bias to CR29 in the variable gain amplifier.

+11V Regulated Power Supply (N)

A precise +5.4V reference for the +11V regulator is provided by VR1. This reference voltage is applied to the noninverting input of U1b. Since the ratio of R5 to R6 establishes the gain of U1b at 2.1, the output at TP2 is 2.1 times +5.4 (+11.3V). Emitter follower Q1 provides current drive for the +11V supply.

LOG AMPLIFIER ASSEMBLY A14, TROUBLESHOOTING

Check supply voltages.

Dead Stage: Use an oscilloscope along the signal path to locate a dead stage.

Check the dc levels along the signal path. Beginning after stage two, the dc level alternates between −0.7V and 0V with each successive stage because of the direct coupling of the stages. This is noted in the waveforms indicated on the schematic.

Log Fidelity Accuracy: Begin testing by establishing a top graticule reference (eighth graticule). Reduce the input signal level in 10 dB steps and observe the variations between each step. Now, establish a reference at the next graticule 100 mV lower (seventh graticule). Step the signal level again and observe the variation between the steps. Continue lowering the reference point until each step below the reference point is within specification. This will indicate at which step the inaccuracies are being introduced. If the error occurs between the 800 mV reference and the 700 mV reference, the problem is probably in the first stage. If the problem is present at all reference levels except the last one, the problem is probably in the last amplifier stage, since it compresses first.

The most probable causes of failure are PIN diodes, Schottky diodes, transistors, capacitors, and resistors, in that order.

Schottky diodes have a dc resistance of about 300 to 330 ohms. The value varies, depending on the current supplied by the ohmmeter. The values should, however, all be within 10% of each other.

TABLE 8-12. LOG AMPLIFIER ASSEMBLY A14, REPLACEABLE PARTS (1 OF 4)

Reference Designation	HP Part Number	C D	Qty	Description	Mfr Code	Mfr Part Number
A14	5061-5411	2	1	LOG AMPLIFIER ASSEMBLY	28480	5061-5411
A14C1	0160-4554	7	67	CAPACITOR-FXD .01UF +-20% 50VDC CER	28480	0160-4554
A14C2	0180-0197	8	1	CAPACITOR-FXD 2.2UF+-10% 20VDC TA	56289	150D225X9020A2
A14C3	0160-4554	7		CAPACITOR-FXD .01UF +-20% 50VDC CER	28480	0160-4554
A14C4	0160-4084	8	2	CAPACITOR-FXD .1UF +-20% 50VDC CER	28480	0160-4084
A14C5	0160-4084	8		CAPACITOR-FXD .1UF +-20% 50VDC CER	28480	0160-4084
A14C6	0160-4554	7		CAPACITOR-FXD .01UF +-20% 50VDC CER	28480	0160-4554
A14C7	0160-3879	7	1	CAPACITOR-FXD .01UF +-20% 100VDC CER	28480	0160-3879
A14C8	0160-4554	7		CAPACITOR-FXD .01UF +-20% 50VDC CER	28480	0160-4554
A14C9	0160-4554	7		CAPACITOR-FXD .01UF +-20% 50VDC CER	28480	0160-4554
A14C10	0160-4554	7		CAPACITOR-FXD .01UF +-20% 50VDC CER	28480	0160-4554
A14C11	0160-4554	7		CAPACITOR-FXD .01UF +-20% 50VDC CER	28480	0160-4554
A14C12	0160-4554	7		CAPACITOR-FXD .01UF +-20% 50VDC CER	28480	0160-4554
A14C14	0160-4554	7		CAPACITOR-FXD .01UF +-20% 50VDC CER	28480	0160-4554
A14C15	0160-4554	7		CAPACITOR-FXD .01UF +-20% 50VDC CER	28480	0160-4554
A14C16	0160-4554	7		CAPACITOR-FXD .01UF +-20% 50VDC CER	28480	0160-4554
A14C17	0160-4554	7		CAPACITOR-FXD .01UF +-20% 50VDC CER	28480	0160-4554
A14C18	0160-4554	7		CAPACITOR-FXD .01UF +-20% 50VDC CER	28480	0160-4554
A14C19	0160-4554	7		CAPACITOR-FXD .01UF +-20% 50VDC CER	28480	0160-4554
A14C20	0160-4554	7		CAPACITOR-FXD .01UF +-20% 50VDC CER	28480	0160-4554
A14C21	0160-4554	7		CAPACITOR-FXD .01UF +-20% 50VDC CER	28480	0160-4554
A14C22	0160-4554	7		CAPACITOR-FXD .01UF +-20% 50VDC CER	28480	0160-4554
A14C23	0160-4554	7		CAPACITOR-FXD .01UF +-20% 50VDC CER	28480	0160-4554
A14C24	0160-4554	7		CAPACITOR-FXD .01UF +-20% 50VDC CER	28480	0160-4554
A14C25	0160-4554	7		CAPACITOR-FXD .01UF +-20% 50VDC CER	28480	0160-4554
A14C26	0160-4554	7		CAPACITOR-FXD .01UF +-20% 50VDC CER	28480	0160-4554
A14C27	0160-4554	7		CAPACITOR-FXD .01UF +-20% 50VDC CER	28480	0160-4554
A14C28	0160-4554	7		CAPACITOR-FXD .01UF +-20% 50VDC CER	28480	0160-4554
A14C29	0160-4554	7		CAPACITOR-FXD .01UF +-20% 50VDC CER	28480	0160-4554
A14C30	0160-4554	7		CAPACITOR-FXD .01UF +-20% 50VDC CER	28480	0160-4554
A14C31	0160-4554	7		CAPACITOR-FXD .01UF +-20% 50VDC CER	28480	0160-4554
A14C32	0160-4554	7		CAPACITOR-FXD .01UF +-20% 50VDC CER	28480	0160-4554
A14C33	0160-4554	7		CAPACITOR-FXD .01UF +-20% 50VDC CER	28480	0160-4554
A14C34	0160-4554	7		CAPACITOR-FXD .01UF +-20% 50VDC CER	28480	0160-4554
A14C36	0160-4554	7		CAPACITOR-FXD .01UF +-20% 50VDC CER	28480	0160-4554
A14C37	0160-4554	7		CAPACITOR-FXD .01UF +-20% 50VDC CER	28480	0160-4554
A14C38	0160-4554	7		CAPACITOR-FXD .01UF +-20% 50VDC CER	28480	0160-4554
A14C39	0160-4554	7		CAPACITOR-FXD .01UF +-20% 50VDC CER	28480	0160-4554
A14C40	0160-4554	7		CAPACITOR-FXD .01UF +-20% 50VDC CER	28480	0160-4554
A14C41	0160-4554	7		CAPACITOR-FXD .01UF +-20% 50VDC CER	28480	0160-4554
A14C42	0160-4554	7		CAPACITOR-FXD .01UF +-20% 50VDC CER	28480	0160-4554
A14C43	0160-4554	7		CAPACITOR-FXD .01UF +-20% 50VDC CER	28480	0160-4554
A14C44	0160-4554	7		CAPACITOR-FXD .01UF +-20% 50VDC CER	28480	0160-4554
A14C45	0160-4554	7		CAPACITOR-FXD .01UF +-20% 50VDC CER	28480	0160-4554
A14C46	0160-4554	7		CAPACITOR-FXD .01UF +-20% 50VDC CER	28480	0160-4554
A14C47	0160-4554	7		CAPACITOR-FXD .01UF +-20% 50VDC CER	28480	0160-4554
A14C48	0160-4554	7		CAPACITOR-FXD .01UF +-20% 50VDC CER	28480	0160-4554
A14C49	0160-4554	7		CAPACITOR-FXD .01UF +-20% 50VDC CER	28480	0160-4554
A14C50	0160-4554	7		CAPACITOR-FXD .01UF +-20% 50VDC CER	28480	0160-4554
A14C51	0160-4554	7		CAPACITOR-FXD .01UF +-20% 50VDC CER	28480	0160-4554
A14C52	0160-4554	7		CAPACITOR-FXD .01UF +-20% 50VDC CER	28480	0160-4554
A14C53	0160-4554	7		CAPACITOR-FXD .01UF +-20% 50VDC CER	28480	0160-4554
A14C54	0160-4554	7		CAPACITOR-FXD .01UF +-20% 50VDC CER	28480	0160-4554
A14C55	0160-4554	7		CAPACITOR-FXD .01UF +-20% 50VDC CER	28480	0160-4554
A14C56	0160-4554	7		CAPACITOR-FXD .01UF +-20% 50VDC CER	28480	0160-4554
A14C57	0160-4554	7		CAPACITOR-FXD .01UF +-20% 50VDC CER	28480	0160-4554
A14C58	0160-4554	7		CAPACITOR-FXD .01UF +-20% 50VDC CER	28480	0160-4554
A14C59	0160-4554	7		CAPACITOR-FXD .01UF +-20% 50VDC CER	28480	0160-4554
A14C60	0160-4554	7		CAPACITOR-FXD .01UF +-20% 50VDC CER	28480	0160-4554
A14C61	0160-4554	7		CAPACITOR-FXD .01UF +-20% 50VDC CER	28480	0160-4554
A14C62	0160-4554	7		CAPACITOR-FXD .01UF +-20% 50VDC CER	28480	0160-4554
A14C63	0160-4554	7		CAPACITOR-FXD .01UF +-20% 50VDC CER	28480	0160-4554
A14C64	0160-4554	7		CAPACITOR-FXD .01UF +-20% 50VDC CER	28480	0160-4554
A14C65	0160-4554	7		CAPACITOR-FXD .01UF +-20% 50VDC CER	28480	0160-4554
A14C66	0160-4554	7		CAPACITOR-FXD .01UF +-20% 50VDC CER	28480	0160-4554
A14C67	0160-4554	7		CAPACITOR-FXD .01UF +-20% 50VDC CER	28480	0160-4554
A14C68	0160-4554	7		CAPACITOR-FXD .01UF +-20% 50VDC CER	28480	0160-4554
A14C69	0160-4554	7		CAPACITOR-FXD .01UF +-20% 50VDC CER	28480	0160-4554
A14C70	0160-4519	4	1	CAPACITOR-FXD 9.1PF +-.5PF 200VDC CER	28480	0160-4519
A14C71	0140-0195	2	1	CAPACITOR-FXD 130PF +-5% 300VDC MICA	72136	DM15F131J0300WV1CR
A14C72	0160-4386	3	1	CAPACITOR-FXD 33PF +-5% 200VDC CER 0+-30	28480	0160-4386

TABLE 8-12. LOG AMPLIFIER ASSEMBLY A14, REPLACEABLE PARTS (2 OF 4)

Reference Designation	HP Part Number	C D	Qty	Description	Mfr Code	Mfr Part Number
A14C23	0160-3872	3	1	CAPACITOR-FXD 2.2PF +-.25PF 200VDC CER	28480	0160-3872
A14C24	0160-4554	7		CAPACITOR-FXD .01UF +-20% 50VDC CER	28480	0160-4554
A14C25	0160-4554	7		CAPACITOR-FXD .01UF +-20% 50VDC CER	28480	0160-4554
A14C26	0160-4554	7		CAPACITOR-FXD .01UF +-20% 50VDC CER	28480	0160-4554
A14C27	0160-4554	7		CAPACITOR-FXD .01UF +-20% 50VDC CER	28480	0160-4554
A14CR1	1910-0016	0	1	DIODE-GE 60V 60MA 10S DO-7	28480	1910-0016
A14CR2	1901-0050	3	5	DIODE-SWITCHING 80V 200MA 2NS DO-35	28480	1901-0050
A14CR4	1901-0050	3		DIODE-SWITCHING 80V 200MA 2NS DO-35	28480	1901-0050
A14CR6	1901-1085	6	17	DIODE-SM SIG SCHOTTKY	28480	1901-1085
A14CR7	1901-1085	6		DIODE-SM SIG SCHOTTKY	28480	1901-1085
A14CR8	1901-1085	6		DIODE-SM SIG SCHOTTKY	28480	1901-1085
A14CR9	1901-1085	6		DIODE-SM SIG SCHOTTKY	28480	1901-1085
A14CR10	1901-1085	6		DIODE-SM SIG SCHOTTKY	28480	1901-1085
A14CR11	1901-1085	6		DIODE-SM SIG SCHOTTKY	28480	1901-1085
A14CR12	1901-1070	9	7	DIODE-PIN 110V	28480	1901-1070
A14CR13	1901-1085	6		DIODE-SM SIG SCHOTTKY	28480	1901-1085
A14CR14	1901-1085	6		DIODE-SM SIG SCHOTTKY	28480	1901-1085
A14CR15	1901-1070	9		DIODE-PIN 110V	28480	1901-1070
A14CR16	1901-1070	9		DIODE-PIN 110V	28480	1901-1070
A14CR17	1901-1085	6		DIODE-SM SIG SCHOTTKY	28480	1901-1085
A14CR18	1901-1085	6		DIODE-SM SIG SCHOTTKY	28480	1901-1085
A14CR19	1901-1070	9		DIODE-PIN 110V	28480	1901-1070
A14CR20	1901-1085	6		DIODE-SM SIG SCHOTTKY	28480	1901-1085
A14CR21	1901-1085	6		DIODE-SM SIG SCHOTTKY	28480	1901-1085
A14CR22	1901-0040	1	1	DIODE-SWITCHING 30V 50MA 2NS DO-35	28480	1901-0040
A14CR23	1901-1085	6		DIODE-SM SIG SCHOTTKY	28480	1901-1085
A14CR24	1901-1085	6		DIODE-SM SIG SCHOTTKY	28480	1901-1085
A14CR25	1901-1070	9		DIODE-PIN 110V	28480	1901-1070
A14CR26	1901-1085	6		DIODE-SM SIG SCHOTTKY	28480	1901-1085
A14CR27	1901-1085	6		DIODE-SM SIG SCHOTTKY	28480	1901-1085
A14CR28	1901-1070	9		DIODE-PIN 110V	28480	1901-1070
A14CR29	1901-1070	9		DIODE-PIN 110V	28480	1901-1070
A14CR30	1901-1085	6		DIODE-SM SIG SCHOTTKY	28480	1901-1085
A14CR31	1901-0050	3		DIODE-SWITCHING 80V 200MA 2NS DO-35	28480	1901-0050
A14CR32	1901-0050	3		DIODE-SWITCHING 80V 200MA 2NS DO-35	28480	1901-0050
A14CR33	1901-0050	3		DIODE-SWITCHING 80V 200MA 2NS DO-35	28480	1901-0050
A14E1	9170-0029	3	1	CORE SHIELDING BEAD	28480	9170-0029
A14L1	9100-1618	1	1	INDUCTOR RF-CH-MLD 5.6UH 10%	28480	9100-1618
A14L2	9140-0144	0	1	INDUCTOR RF-CH-MLD 4.7UH 10% .105DX.26LG	28480	9140-0144
A14L3	9140-0105	3	2	INDUCTOR RF-CH-MLD 8.2UH 10%	28480	9140-0105
A14L4	9100-1619	2	2	INDUCTOR RF-CH-MLD 6.8UH 10%	28480	9100-1619
A14L5	9100-1619	2		INDUCTOR RF-CH-MLD 6.8UH 10%	28480	9100-1619
A14L6	9140-0114	4	3	INDUCTOR RF-CH-MLD 10UH 10% .166DX.385LG	28480	9140-0114
A14L7	9140-0114	4		INDUCTOR RF-CH-MLD 10UH 10% .166DX.385LG	28480	9140-0114
A14L8	9140-0114	4		INDUCTOR RF-CH-MLD 10UH 10% .166DX.385LG	28480	9140-0114
A14L9	9140-0112	2	1	INDUCTOR RF-CH-MLD 4.7UH 10%	28480	9140-0112
A14L10	9140-0105	3		INDUCTOR RF-CH-MLD 8.2UH 10%	28480	9140-0105
A14L11	9100-1627	2	1	INDUCTOR RF-CH-MLD 39UH 5% .166DX.385LG	28480	9100-1627
A14L12	9100-1629	4	1	INDUCTOR RF-CH-MLD 47UH 5% .166DX.385LG	28480	9100-1629
A14L13	9100-1622	7	1	INDUCTOR RF-CH-MLD 24UH 5% .166DX.385LG	28480	9100-1622
A14L14	9100-2257	6	1	INDUCTOR RF-CH-MLD 820NH 10% .105DX.26LG	28480	9100-2257
A14Q1	1854-0637	1	1	TRANSISTOR NPN 2N2219A SI TO-5 PD=800MW	01295	2N2219A
A14Q2	1853-0281	9	3	TRANSISTOR PNP 2N2907A SI TO-18 PD=400MW	04713	2N2907A
A14Q3	1853-0281	9		TRANSISTOR PNP 2N2907A SI TO-18 PD=400MW	04713	2N2907A
A14Q4	1853-0015	7	5	TRANSISTOR PNP SI PD=200MW FT=500MHZ	28480	1853-0015
A14Q5	1853-0015	7		TRANSISTOR PNP SI PD=200MW FT=500MHZ	28480	1853-0015
A14Q6	1853-0007	7	1	TRANSISTOR PNP 2N3251 SI TO-18 PD=360MW	04713	2N3251
A14Q7	1854-0019	3	12	TRANSISTOR NPN SI TO-18 PD=360MW	28480	1854-0019
A14Q8	1853-0015	7		TRANSISTOR PNP SI PD=200MW FT=500MHZ	28480	1853-0015
A14Q9	1854-0019	3		TRANSISTOR NPN SI TO-18 PD=360MW	28480	1854-0019
A14Q10	1853-0015	7		TRANSISTOR PNP SI PD=200MW FT=500MHZ	28480	1853-0015
A14Q11	1854-0019	3		TRANSISTOR NPN SI TO-18 PD=360MW	28480	1854-0019
A14Q12	1853-0015	7		TRANSISTOR PNP SI PD=200MW FT=500MHZ	28480	1853-0015
A14Q13	1854-0019	3		TRANSISTOR NPN SI TO-18 PD=360MW	28480	1854-0019
A14Q14	1854-0019	3		TRANSISTOR NPN SI TO-18 PD=360MW	28480	1854-0019
A14Q15	1854-0019	3		TRANSISTOR NPN SI TO-18 PD=360MW	28480	1854-0019
A14Q16	1854-0019	3		TRANSISTOR NPN SI TO-18 PD=360MW	28480	1854-0019
A14Q17	1854-0019	3		TRANSISTOR NPN SI TO-18 PD=360MW	28480	1854-0019
A14Q18	1854-0019	3		TRANSISTOR NPN SI TO-18 PD=360MW	28480	1854-0019
A14Q19	1854-0019	3		TRANSISTOR NPN SI TO-18 PD=360MW	28480	1854-0019
A14Q20	1854-0019	3		TRANSISTOR NPN SI TO-18 PD=360MW	28480	1854-0019
A14Q21	1854-0475	5	1	TRANSISTOR-DUAL NPN PD=750MW	28480	1854-0475
A14Q22	1854-0404	0	2	TRANSISTOR NPN SI TO-18 PD=360MW	28480	1854-0404
A14Q23	1853-0281	9		TRANSISTOR PNP 2N2907A SI TO-18 PD=400MW	04713	2N2907A
A14Q24	1854-0404	0		TRANSISTOR NPN SI TO-18 PD=360MW	28480	1854-0404
A14Q25	1854-0019	3		TRANSISTOR NPN SI TO-18 PD=360MW	28480	1854-0019

TABLE 8-12. LOG AMPLIFIER ASSEMBLY A14, REPLACEABLE PARTS (3 OF 4)

Reference Designation	HP Part Number	C D	Qty	Description	Mfr Code	Mfr Part Number
A14R1	0757-0317	7	1	RESISTOR 1.33K 1% .125W F TC=0+-100	24546	C4-1/8-T0-1331-F
A14R2	0757-0280	3	8	RESISTOR 1K 1% .125W F TC=0+-100	24546	C4-1/8-T0-1001-F
A14R3	0698-0084	9	1	RESISTOR 2.15K 1% .125W F TC=0+-100	24546	C4-1/8-T0-2151-F
A14R4	0698-3430	5	1	RESISTOR 21.5 1% .125W F TC=0+-100	32008	PME55-1/8 T0-2185-F
A14R5	0757-0443	0	1	RESISTOR 11K 1% .125W F TC=0+-100	24546	C4-1/8-T0-1102-F
A14R6	0757-0442	9	4	RESISTOR 10K 1% .125W F TC=0+-100	24546	C4-1/8-T0-1002-F
A14R7	0757-0465	6	4	RESISTOR 100K 1% .125W F TC=0+-100	24546	C4-1/8-T0-1003-F
A14R8	0757-0442	9		RESISTOR 10K 1% .125W F TC=0+-100	24546	C4-1/8-T0-1002-F
A14R9	0698-3458	9	1	RESISTOR 42.2K 1% .125W F TC=0+-100	24546	C4-1/8-T0-4222-F
A14R10	2100-2633	5	2	RESISTOR-TRMR 1K 10% C SIDE-ADJ 1-TRN	30983	ET50X102
A14R12	0757-0458	7	2	RESISTOR 51.1K 1% .125W F TC=0+-100	24546	C4-1/8-T0-5112-F
A14R13	0757-0401	3	8	RESISTOR 100 1% .125W F TC=0+-100	24546	C4-1/8-T0-101-F
A14R14	0757-0460	1	1	RESISTOR 61.9K 1% .125W F TC=0+-100	24546	C4-1/8-T0-6192-F
A14R15	0757-0458	7		RESISTOR 51.1K 1% .125W F TC=0+-100	24546	C4-1/8-T0-5112-F
A14R16	0757-0180	2	1	RESISTOR 31.6 1% .125W F TC=0+-100	28480	0757-0180
A14R17	0757-0464	5	1	RESISTOR 90.9K 1% .125W F TC=0+-100	24546	C4-1/8-T0-9092-F
A14R18	0698-3136	8	2	RESISTOR 17.8K 1% .125W F TC=0+-100	24546	C4-1/8-T0-1782-F
A14R19	0757-0123	3	1	RESISTOR 34.8K 1% .125W F TC=0+-100	28480	0757-0123
A14R20	0698-0083	8	2	RESISTOR 1.96K 1% .125W F TC=0+-100	24546	C4-1/8-T0-1961-F
A14R21	2100-2459	9	2	RESISTOR-TRMR 5K 10% C SIDE-ADJ 1-TRN	30983	ET50X502
A14R22	0698-3453	2	1	RESISTOR 196K 1% .125W F TC=0+-100	24546	C4-1/8-T0-1963-F
A14R23	2100-2514	1	1	RESISTOR-TRMR 20K 10% C SIDE-ADJ 1-TRN	30983	ET50W203
A14R24	0757-0274	5	3	RESISTOR 1.21K 1% .125W F TC=0+-100	24546	C4-1/8-T0-1211-F
A14R25	0757-0274	5		RESISTOR 1.21K 1% .125W F TC=0+-100	24546	C4-1/8-T0-1211-F
A14R26	0757-0274	5		RESISTOR 1.21K 1% .125W F TC=0+-100	24546	C4-1/8-T0-1211-F
A14R27	2100-2459	9		RESISTOR-TRMR 5K 10% C SIDE-ADJ 1-TRN	30983	ET50X502
A14R28	0757-0346	2	14	RESISTOR 10 1% .125W F TC=0+-100	24546	C4-1/8-T0-10R0-F
A14R29	0757-0346	2		RESISTOR 10 1% .125W F TC=0+-100	24546	C4-1/8-T0-10R0-F
A14R30	2100-2522	1	3	RESISTOR-TRMR 10K 10% C SIDE-ADJ 1-TRN	30983	ET50X103
A14R31	0757-0346	2		RESISTOR 10 1% .125W F TC=0+-100	24546	C4-1/8-T0-10R0-F
A14R32	0757-0346	2		RESISTOR 10 1% .125W F TC=0+-100	24546	C4-1/8-T0-10R0-F
A14R33	2100-2522	1		RESISTOR-TRMR 10K 10% C SIDE-ADJ 1-TRN	30983	ET50X103
A14R34	2100-2521	0	1	RESISTOR-TRMR 2K 10% C SIDE-ADJ 1-TRN	30983	ET50X202
A14R35	0757-0346	2		RESISTOR 10 1% .125W F TC=0+-100	24546	C4-1/8-T0-10R0-F
A14R36	0757-0346	2		RESISTOR 10 1% .125W F TC=0+-100	24546	C4-1/8-T0-10R0-F
A14R37	0757-0442	9		RESISTOR 10K 1% .125W F TC=0+-100	24546	C4-1/8-T0-1002-F
A14R38	0698-3151	7	1	RESISTOR 2.87K 1% .125W F TC=0+-100	24546	C4-1/8-T0-2871-F
A14R39	2100-2520	9	1	RESISTOR-TRMR 50 20% C SIDE-ADJ 1-TRN	30983	ET50X500
A14R40	0757-0442	9		RESISTOR 10K 1% .125W F TC=0+-100	24546	C4-1/8-T0-1002-F
A14R41	0757-0290	5	1	RESISTOR 6.19K 1% .125W F TC=0+-100	19701	MF4C1/8-T0-6191-F
A14R42	0757-0280	7	1	RESISTOR 5.62K 1% .125W F TC=0+-100	24546	C4-1/8-T0-5621-F
A14R43	0757-0447	4	3	RESISTOR 16.2K 1% .125W F TC=0+-100	24546	C4-1/8-T0-1622-F
A14R44	0757-0420	3	2	RESISTOR 750 1% .125W F TC=0+-100	24546	C4-1/8-T0-751-F
A14R45	0698-3444	1	8	RESISTOR 316 1% .125W F TC=0+-100	24546	C4-1/8-T0-316R-F
A14R46	0698-3156	2	1	RESISTOR 14.7K 1% .125W F TC=0+-100	24546	C4-1/8-T0-1472-F
A14R47	0757-0346	2		RESISTOR 10 1% .125W F TC=0+-100	24546	C4-1/8-T0-10R0-F
A14R48	0698-3150	6	4	RESISTOR 2.37K 1% .125W F TC=0+-100	24546	C4-1/8-T0-2371-F
A14R49	0698-3132	4	1	RESISTOR 261 1% .125W F TC=0+-100	24546	C4-1/8-T0-2610-F
A14R50	0757-0279	0	4	RESISTOR 3.16K 1% .125W F TC=0+-100	24546	C4-1/8-T0-3161-F
A14R51	0757-0346	2		RESISTOR 10 1% .125W F TC=0+-100	24546	C4-1/8-T0-10R0-F
A14R52	0698-3444	1		RESISTOR 316 1% .125W F TC=0+-100	24546	C4-1/8-T0-316R-F
A14R53	0757-0444	1	6	RESISTOR 12.1K 1% .125W F TC=0+-100	24546	C4-1/8-T0-1212-F
A14R54	0757-0444	1		RESISTOR 12.1K 1% .125W F TC=0+-100	24546	C4-1/8-T0-1212-F
A14R55	0757-0440	7	8	RESISTOR 7.5K 1% .125W F TC=0+-100	24546	C4-1/8-T0-7501-F
A14R56	0757-0401	0		RESISTOR 100 1% .125W F TC=0+-100	24546	C4-1/8-T0-101-F
A14R57	0757-0280	3		RESISTOR 1K 1% .125W F TC=0+-100	24546	C4-1/8-T0-1001-F
A14R58	0757-0346	2		RESISTOR 10 1% .125W F TC=0+-100	24546	C4-1/8-T0-10R0-F
A14R59	0698-3150	6		RESISTOR 2.37K 1% .125W F TC=0+-100	24546	C4-1/8-T0-2371-F
A14R60	0698-3444	1		RESISTOR 316 1% .125W F TC=0+-100	24546	C4-1/8-T0-316R-F
A14R61	0757-0280	3		RESISTOR 1K 1% .125W F TC=0+-100	24546	C4-1/8-T0-1001-F
A14R62	0757-0444	1		RESISTOR 12.1K 1% .125W F TC=0+-100	24546	C4-1/8-T0-1212-F
A14R63	0757-0444	1		RESISTOR 12.1K 1% .125W F TC=0+-100	24546	C4-1/8-T0-1212-F
A14R64	0757-0440	7		RESISTOR 7.5K 1% .125W F TC=0+-100	24546	C4-1/8-T0-7501-F
A14R65	0757-0401	0		RESISTOR 100 1% .125W F TC=0+-100	24546	C4-1/8-T0-101-F
A14R66	0757-0280	3		RESISTOR 1K 1% .125W F TC=0+-100	24546	C4-1/8-T0-1001-F
A14R67	0757-0346	2		RESISTOR 10 1% .125W F TC=0+-100	24546	C4-1/8-T0-10R0-F
A14R68	0698-8958	2	1	RESISTOR 511K 1% .125W F TC=0+-100	28480	0698-8958
A14R69	2100-2692	6	1	RESISTOR-TRMR 1M 20% C SIDE-ADJ 1-TRN	30983	ET50X105
A14R70	0698-3444	1		RESISTOR 316 1% .125W F TC=0+-100	24546	C4-1/8-T0-316R-F
A14R71	0757-0279	9		RESISTOR 3.16K 1% .125W F TC=0+-100	24546	C4-1/8-T0-3161-F
A14R72	0757-0444	1		RESISTOR 12.1K 1% .125W F TC=0+-100	24546	C4-1/8-T0-1212-F
A14R73	0757-0444	1		RESISTOR 12.1K 1% .125W F TC=0+-100	24546	C4-1/8-T0-1212-F
A14R74	0757-0440	7		RESISTOR 7.5K 1% .125W F TC=0+-100	24546	C4-1/8-T0-7501-F
A14R75	0757-0401	0		RESISTOR 100 1% .125W F TC=0+-100	24546	C4-1/8-T0-101-F
A14R76	0757-0280	3		RESISTOR 1K 1% .125W F TC=0+-100	24546	C4-1/8-T0-1001-F

TABLE 8-12. LOG AMPLIFIER ASSEMBLY A14, REPLACEABLE PARTS (4 OF 4)

Reference Designation	HP Part Number	C D	Qty	Description	Mfr Code	Mfr Part Number
A14R77	0757-0346	2		RESISTOR 10 1% .125W F TC=0+-100	24546	C4-1/8-T0-10R0-F
A14R79	3650-3444	1		RESISTOR 316 1% .125W F TC=0+-100	24546	C4-1/8-T0-316R-F
A14R80	0757-0289	2	6	RESISTOR 13.3K 1% .125W F TC=0+-100	19701	MF4C1/8-T0-1332-F
A14R81	0757-0289	2		RESISTOR 13.3K 1% .125W F TC=0+-100	19701	MF4C1/8-T0-1332-F
A14R82	0757-0440	7		RESISTOR 7.5K 1% .125W F TC=0+-100	24546	C4-1/8-T0-7501-F
A14R83	0757-0401	3		RESISTOR 100 1% .125W F TC=0+-100	24546	C4-1/8-T0-101-F
A14R84	0757-0280	3		RESISTOR 1K 1% .125W F TC=0+-100	24546	C4-1/8-T0-1001-F
A14R85	0757-0279	3		RESISTOR 3.16K 1% .125W F TC=0+-100	24546	C4-1/8-T0-3161-F
A14R86	0757-0346	2		RESISTOR 10 1% .125W F TC=0+-100	24546	C4-1/8-T0-10R0-F
A14R87	3650-3444	1		RESISTOR 316 1% .125W F TC=0+-100	24546	C4-1/8-T0-316R-F
A14R88	2100-2522	1		RESISTOR-TRMR 10K 10% C SIDE-ADJ 1-TRN	30983	ET50X103
A14R89	0757-0440	7		RESISTOR 7.5K 1% .125W F TC=0+-100	24546	C4-1/8-T0-7501-F
A14R90	0757-0463	2	2	RESISTOR 121 1% .125W F TC=0+-100	24546	C4-1/8-T0-121R-F
A14R91	0757-0289	2		RESISTOR 13.3K 1% .125W F TC=0+-100	19701	MF4C1/8-T0-1332-F
A14R92	0757-0289	2		RESISTOR 13.3K 1% .125W F TC=0+-100	19701	MF4C1/8-T0-1332-F
A14R93*	3650-3153	9	2	RESISTOR 3.02K 1% .125W F TC=0+-100	24546	C4-1/8-T0-3831-F
A14R94	0698-3150	6		RESISTOR 2.37K 1% .125W F TC=0+-100	24546	C4-1/8-T0-2371-F
A14R95	0757-0346	2		RESISTOR 10 1% .125W F TC=0+-100	24546	C4-1/8-T0-10R0-F
A14R96	0698-3444	1		RESISTOR 316 1% .125W F TC=0+-100	24546	C4-1/8-T0-316R-F
A14R97	0757-0289	2		RESISTOR 13.3K 1% .125W F TC=0+-100	19701	MF4C1/8-T0-1332-F
A14R98	0757-0289	2		RESISTOR 13.3K 1% .125W F TC=0+-100	19701	MF4C1/8-T0-1332-F
A14R99	0757-0440	7		RESISTOR 7.5K 1% .125W F TC=0+-100	24546	C4-1/8-T0-7501-F
A14R100	0757-0403	2		RESISTOR 121 1% .125W F TC=0+-100	24546	C4-1/8-T0-121R-F
A14R101*	0698-3153	9		RESISTOR 3.83K 1% .125W F TC=0+-100	24546	C4-1/8-T0-3831-F
A14R102	0757-0346	2		RESISTOR 10 1% .125W F TC=0+-100	24546	C4-1/8-T0-10R0-F
A14R103	0757-0401	3		RESISTOR 100 1% .125W F TC=0+-100	24546	C4-1/8-T0-101-F
A14R104	0757-0461	0		RESISTOR 100 1% .125W F TC=0+-100	24546	C4-1/8-T0-101-F
A14R105	3650-3444	1		RESISTOR 316 1% .125W F TC=0+-100	24546	C4-1/8-T0-316R-F
A14R106	0757-0417	8	1	RESISTOR 562 1% .125W F TC=0+-100	24546	C4-1/8-T0-562R-F
A14R107*	0757-0199	3	1	RESISTOR 21.5K 1% .125W F TC=0+-100	24546	C4-1/8-T0-2152-F
A14R108	0698-3434	9	1	RESISTOR 34.0 1% .125W F TC=0+-100	24546	C4-1/8-T0-34R0-F
A14R109	0757-0438	9	1	RESISTOR 90.9 1% .125W F TC=0+-100	24546	C4-1/8-T0-90R9-F
A14R110	0757-0418	9	2	RESISTOR 619 1% .125W F TC=0+-100	24546	C4-1/8-T0-6192-F
A14R111	3650-3443	7	1	RESISTOR 196 1% .125W F TC=0+-100	24546	C4-1/8-T0-196R-F
A14R112	0757-0280	3		RESISTOR 1K 1% .125W F TC=0+-100	24546	C4-1/8-T0-1001-F
A14R113	0757-0280	3		RESISTOR 1K 1% .125W F TC=0+-100	24546	C4-1/8-T0-1001-F
A14R114	0698-3136	8		RESISTOR 17.8K 1% .125W F TC=0+-100	24546	C4-1/8-T0-1782-F
A14R115	0757-0401	3		RESISTOR 100 1% .125W F TC=0+-100	24546	C4-1/8-T0-101-F
A14R116	0698-3155	1	1	RESISTOR 4.64K 1% .125W F TC=0+-100	24546	C4-1/8-T0-4641-F
A14R116	0757-0418	9		RESISTOR 619 1% .125W F TC=0+-100	24546	C4-1/8-T0-619R-F
A14R117	0757-0440	7		RESISTOR 7.5K 1% .125W F TC=0+-100	24546	C4-1/8-T0-7501-F
A14R118	0698-0005	9	1	RESISTOR 2.61K 1% .125W F TC=0+-100	24546	C4-1/8-T0-2611-F
A14R119	0698-3438	3	1	RESISTOR 147 1% .125W F TC=0+-100	24546	C4-1/8-T0-147R-F
A14R120	0757-0439	4	1	RESISTOR 6.81K 1% .125W F TC=0+-100	24546	C4-1/8-T0-6811-F
A14R121	2100-2633	5		RESISTOR-TRMR 1K 10% C SIDE-ADJ 1-TRN	30983	ET50X102
A14R122	0757-0420	3		RESISTOR 750 1% .125W F TC=0+-100	24546	C4-1/8-T0-751-F
A14R123	0757-0440	7		RESISTOR 7.5K 1% .125W F TC=0+-100	24546	C4-1/8-T0-7501-F
A14R124	0757-0447	4		RESISTOR 16.2K 1% .125W F TC=0+-100	24546	C4-1/8-T0-1622-F
A14R125	0757-0447	4		RESISTOR 16.2K 1% .125W F TC=0+-100	24546	C4 1/8-T0 [illegible] F
A14R126	0757-0465	6		RESISTOR 100K 1% .125W F TC=0+-100	24546	C4 1/8 TO-1033 F
A14R127	0757-0465	6		RESISTOR 100K 1% .125W F TC=0+-100	24546	C4-1/8-T0-1003-F
A14R128	0757-0465	6		RESISTOR 100K 1% .125W F TC=0+-100	24546	C4-1/8-T0-1003-F
A14R129	0698-0083	8		RESISTOR 1.96K 1% .125W F TC=0+-100	24546	C4-1/8-T0-1961-F
A14R130	0757-0279	0		RESISTOR 3.16K 1% .125W F TC=0+-100	24546	C4-1/8-T0-3161-F
A14R131	0757-0402	1	1	RESISTOR 110 1% .125W F TC=0+-100	24546	C4-1/8-T0-111-F
A14R132	0757-0438	3	1	RESISTOR 5.11K 1% .125W F TC=0+-100	24546	C4-1/8-T0-5111-F
A14R133	0698-7212	9	2	RESISTOR 100 1% .05W F TC=0+-100	24546	C3-1/8-T0-100R-F
A14R134	0698-7212	9		RESISTOR 100 1% .05W F TC=0+-100	24546	C3-1/8-T0-100R-F
A14R785	0698-3150	6		RFSIGTOR 2.37K 1% .125W F TC=0+-100	24546	C4-1/8-T0-2371-F
A14TP1	0360-0535	0	10	TERMINAL TEST POINT PCB	28480	0360-0535
A14TP2	0360-0535	0		TFRMINAL TEST POINT PCB	28480	0360-0535
A14TP3	0360-0535	0		TERMJNAI TEST POINT PCB	28480	0360-0535
A14TP4	0360-0535	0		TERMINAL TEST POINT PCU	28480	0360-0535
A14TP5	0360-0535	0		TERMINAL TEST POINT PCB	28480	0360-0535
A14TP6	0360-0535	0		TERMINAL TEST POINT PCR	28480	0360-0535
A14TP7	0360-0535	0		TERMINAL TEST POINT PCB	28480	0360-0535
A14TP8	0360-0535	0		TERMINAL TEST POINT PCB	28480	0360-0535
A14TP9	0360-0535	0		TERM▮NAL TEST PO▮NT PCB	28480	0360-0535
A14TP10	0360-0535	0		TFRMINAL TEST POINT PCB	28480	0360-0535
A14U1	1826-0092	3	2	IC OP AMP GP DUAL TO 99 PKG	28480	1826-0092
A14U2	1826-0092	3		IC OP AMP GP DUAL TO 99 PKG	28480	1826-0092
A14VR1	1902-0901	5	1	DIODE ZNR 5.4V 1% DO-35 PD=.4W TC=+.046%	28480	1902-0901
				A14 MISCELLANEOUS PARTS		
	08559-00027	7	1	COVER, LOG AMPLIFIER	28480	08559-00027

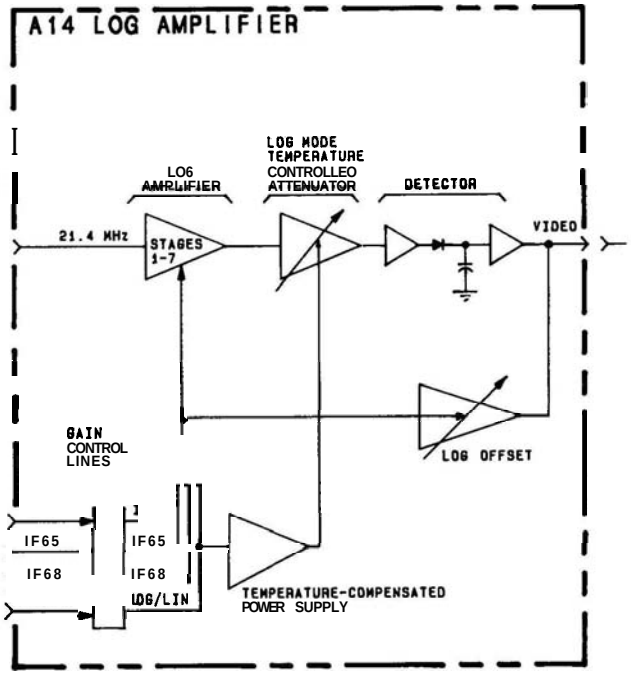

FIGURE 8-67. LOG AMPLIFIER ASSEMBLY A14, BLOCK DIAGRAM

A14
LOG AMPLIFIER ASSEMBLY

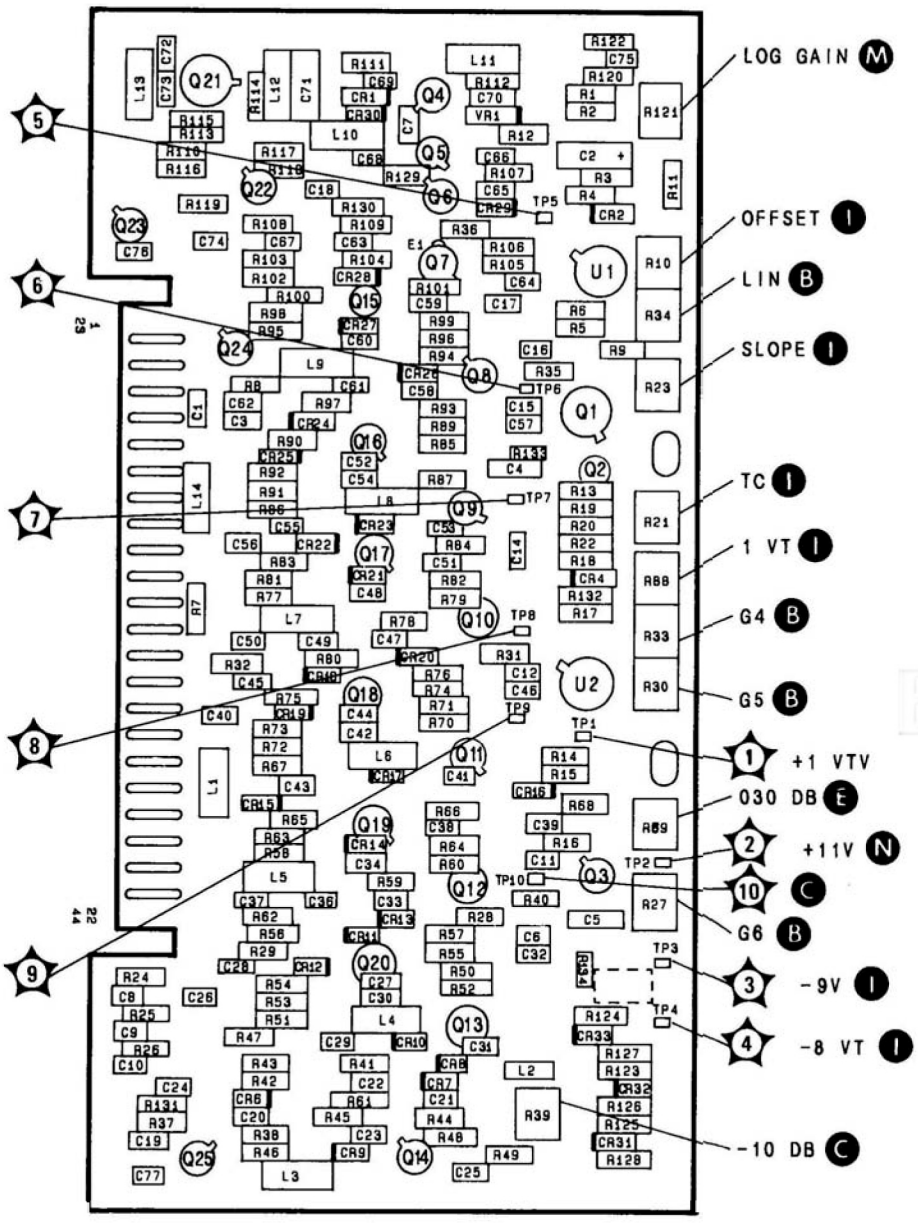

FIGURE 8-68. LOG AMPLIFIER ASSEMBLY A14, COMPONENT LOCATIONS

A14 LOG AMPLIFIER ASSEMBLY
5061-5411 (1 OF 2)

P1

PIN	SIGNAL	TO/FROM	FUNCTION BLOCK
1 23	GND GND	A16	O O
2 24	VIDEO GND	A2 A16	M O
3 25	GND -12.6V	A16 AT J28 REAR PANEL	O O
4 26	GND GND	A16	O O
5 27	GND -15V	A16 AT J28 REAR PANEL	O O
6 28	GND GND	A16	O O
7 29	GND GND	A16	O O
8 30	-8VT GND	A2 A16	1 O
9 31	GND LOG/LIN	A16 A2	O O
10 32	GND GND	A16	O O
11 33	GND GND	A16	O O
12 34	GND GND	A16	O O
13 35	GND GND	A16	O O
14 36	GND GND	A16	O O
15 37	GND GND	A16	O O
16 38	GND IFG4	A16 A2	O 4
17 39	GND IFG5	A16 A2	O 5
18 40	GND IFG6	A16 A2	O 6
19 41	GND GND	A16	O O
20 42	GND GND	A16	O O
21 43	GND GND	A16	O O
22 44	GND 21.4 MHz	A16 A13	O 2

O POWER SUPPLIES

P1-27(IN) +15V → C1 .01 → +15V
P1-1,3-7,9-24,26,28-30,32,33,34-37,41-43 GND
P1-25(IN) -12.6V → -12.6V

A 1st STAGE

P1-44(IN) 21.4 MHz → R131 110, C19 .01, R37 10K → Q25 → C77 .01, C20 .01, R61 1000, R44 750, C21 .01, R47 10, L3 8.2, Q14, R48 2370 -9VF1, R38 2870, CR6, C22 .01, CR7, CR8, C23 .01, R45 316, CR9, R42 5620, R41 8190, L2 4.7, R43 16.2K, R46 14.7K, C24 .01

C 2nd STAGE

C26 .01, C31 .01, R51 10, L4 6.8, C30 .01, Q10, Q20, C25 .01, Q13, R52 316, R49 261, R35 50 CW ~10dB, R50 5360, CR10, CR11, R55 7500, CR12, R56 100, C29 .01, R53 12.1K, R54 12.1K, C28 .01, C27 .01, R57 1000, C6 .01

D 3rd STAGE

C33 .01, R58 10, R59 2370, Q12, R40 10K -9V, R60 316, C34 .01, L5 5.6, Q19, CR13, CR14, R64 7500, R65 100, CR15, C36 .01, R62 12.1K, R63 12.1K, C37 .01, C38 .01, R66 1000, C11 .01

E 4th STAGE

+11V, L6 5.6, C40 .01, C41 .01, R67 10, C42 .01, L6 10, Q11, Q18, R70 316, C39 .01, CR16, R68 51K, R69 1M ~30dB, -8VT, R71 3160, CR17, CR18, R74 7500, R75 100, CR19, C43 .01, R72 12.1K, R73 12.1K, C45 .01, C44 .01, R76 1000, C12 .01

B GAIN CONTROL LINES

P1-40(IN) IFG6 → R24 1210, R27 5000 CW, C8 .01, G6, M1 SHEET 2
P1-39(IN) IFG5 → R25 1210, R30 10K CW, C9 .01, G5, M2 SHEET 2
P1-38(IN) IFG4 → R26 1210, R33 10K CW, C10 .01, G4, M3 SHEET 2
+11V → R7 100K, R32 10, R29 10
P1-31(IN) LOG/LIN → L14 .82, R8 10K, Q24, -8VT, LIN, C3 .01, R34 2050 CW, 1 4 SHEET 2

FRONT SWITCH ASSEMBLY A2

INPUT ATTEN (NOTE 6)

70	60	50	40	30	20	10	0	
60	50	40	30	20	10	0	-10	
50	40	30	20	10	0	-10	-20	
40	30	20	10	0	-10	-20	-30	
30	20	10	0	-10	-20	-30	-40	
20	10	0	-10	-20	-30	-40	-50	
10	0	-10	-20	-30	-40	-50	-60	
0	-10	-20	-30	-40	-50	-60	-70	
-10	-20	-30	-40	-50	-60	-70	-80	
-20	-30	-40	-50	-60	-70	-80	-90	
-30	-40	-50	-60	-70	-80	-90	-100	

REFERENCE LEVEL S1

10dB/DIV 1dB/DIV LIN

S2 +15V A B C -10V +15V J2-14 W2 EXPAND (OUT)

IFG1 IFG2 IFG3 IFG4 IFG5 IFG6 J2 W2 TO A12

LOG/LIN

TO SHEET 2

A14 LOG AMPLIFIER ASSEMBLY
5061-5411 (2 OF 2)

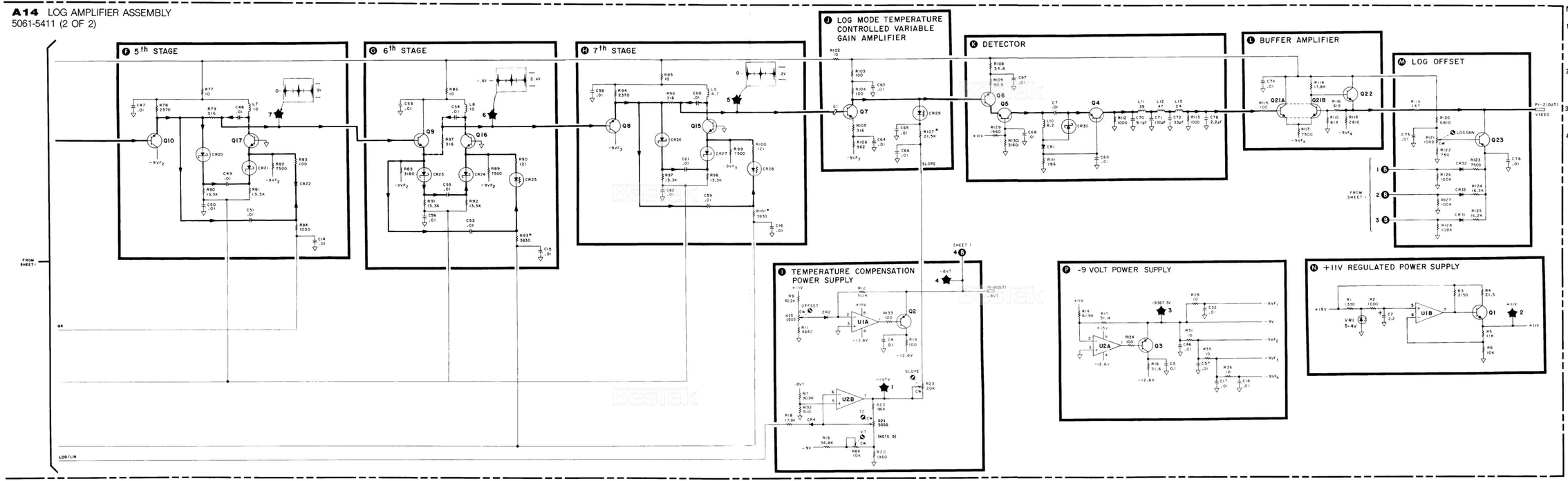

NOTES:

1. REFERENCE DESIGNATORS WITHIN THIS ASSEMBLY ARE ABBREVIATED. FOR COMPLETE DESIGNATOR, PREFIX WITH ASSEMBLY REFERENCE DESIGNATOR.
2. UNLESS OTHERWISE INDICATED:
   RESISTANCE IN OHMS (Ω)
   CAPACITANCE IN MICROFARADS (μF)
   INDUCTANCE IN MICROHENRIES (μH)
3. * ASTERISK DENOTES FACTORY SELECTED COMPONENT. NOMINAL VALUE SHOWN.
4. SIGNAL LEVELS AND TEST POINT WAVEFORM ASSUME THE FOLLOWING SETTINGS:
   GREEN (NORMAL) SETTINGS
   FREQUENCY SPAN/DIV: 5 MHz
   RESOLUTION BW: 1 MHz
   FREQUENCY BAND: 1–3 GHz
   INPUT ATTEN: 0 dB
   REF LEVEL: –10 dBm
   35 MHz –10 dBm (CAL OUTPUT)
   SIGNAL INTO INPUT
   ANALYZER TUNED TO SIGNAL
5. R21 TC AND R88 1VT FACTORY ADJUSTABLE ONLY.
6. INPUT ATTEN AND REFERENCE LEVEL CONTROLS ARE MECHANICALLY COUPLED, AND PROVIDE TEN REFERENCE LEVEL SETTINGS FOR EACH INPUT ATTENUATION SETTING.
7. MNEMONIC TABLE:

MNEMONIC	DESCRIPTION
IFG4 IFG5 IFG6	IF GAIN CONTROL LINES
LOG/LIN	SELECTS EITHER LOG OR LINEAR

8. TRANSISTOR PIN CONFIGURATIONS: (BOTTOM VIEW)

A14

FIGURE 8-69. LOG AMPLIFIER ASSEMBLY A14, SCHEMATIC DIAGRAM (2 OF 2)

8-17798-180

VERTICAL DRIVING/BLANKING ASSEMBLY A15, CIRCUIT DESCRIPTION

The Vertical Driving/Blanking Assembly A15 contains a preamplifier to amplify the detected and filtered video received from the Log Amplifier Assembly A14. It also supplies the video signal needed to trigger the sweep generator in the video trigger mode. Following the preamplifier is the vertical driver, a differential amplifier that drives the vertical deflection plates in push-pull. Blanking, penlift, retrace, and sweep indicator signals are also supplied by the Vertical Driving/Blanking Assembly A15.

Preamplifier (A)

The detected and filtered video (0 to 800 mV) from the Log Amplifier Assembly A14 is applied to the gate of Q17a. Transistors Q17 (both sections), Q11, Q12, and Q18 form an FET input differential amplifier; the gate of Q17a is the noninverting input and the gate of Q17b is the inverting input. The amplifier's output, at the emitter of Q18, is fed back to the inverting input (Q17b) through a voltage divider (R11, R12, and R13). A simplified preamplifier circuit diagram is shown in Figure 8-70. The voltage gain can be expressed as a function of these resistor values: Gain = 1 + R11/R12 + R13. The circuit's gain is 10. Since the limit to the input voltage is 800 mV, the maximum voltage at the output of Q18 (TP3) is 8V. This voltage is coupled through R17 and becomes the trigger voltage for the video trigger mode (VIDEO position). Transistor array section U2d and transistor Q13 are temperature-compensated current sources. These bias the differential amplifier (U2a, U2b, and Q20) that provides isolation between the preamplifier and the vertical driver. The preamplifier output is sent via R40 to the rear panel (AUX VERT OUTPUT, P1 pin 14).

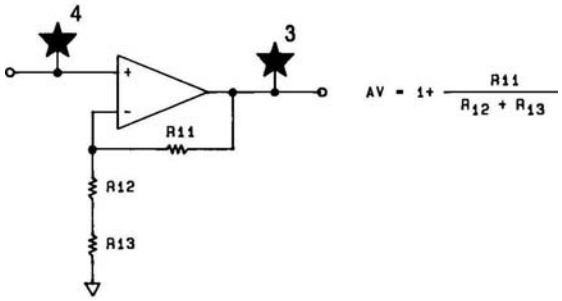

FIGURE 8-70. PREAMPLIFIER CIRCUIT, SIMPLIFIED SCHEMATIC

Since the vertical driver deflection sensitivity is 800 mV, for full-scale deflection, a divide-by-ten circuit and an offset circuit are used to obtain the correct signal amplitude. With the LOG/LIN switch (A2A1A2) in either the 10 dB per division or linear position, +15V is applied to the EXPAND line. This reverse biases CR1 and turns Q19 on, dividing the preamplifier's output by 10. Diode CR2 is forward biased and diode CR3 is reverse biased. Transistor Q19, R18, and R20 form the output divider network. When 1 dB per division is selected, the EXPAND line is open and Q19 is biased off by CR1 and R22, disabling the divide-by-ten circuit. The full preamplifier voltage is now available at the output of Q18 and must be offset +7.2V to display the 800 mV signal peak. This in effect expands the display.

The offset of the signal is accomplished by a circuit comprised of U2c, CR3, CR4, and R18. Transistor array section U2c forms an adjustable current source that draws current through CR3 and R18. The 1 dB offset control is used to set the voltage drop across R18 at +7.2V. This voltage shifts the signal negatively as it passes through R18. Diode CR4, becomes forward biased as the offset signal goes below −0.6V and acts to clamp the minimum output at that level.

Beamfinder

With 1 dB per division selected, the baseline is off-screen. Without a visible signal present, there is no displayed trace. This condition could be misinterpreted as a display malfunction. On an HP 180 series mainframe, a visible trace can be produced by pressing the BEAMFINDER switch on the mainframe. This causes the –12.6V on the beamfinder line to be removed, turns Q19 off, and disables the current source, U2c. The vertical display then reverts to the 10 dB per division mode while the horizontal display sweep is narrowed and the trace is intensified by the mainframe. The HP 853A mainframe does not require a BEAMFINDER, therefore the mainframe always supplies –12.6V to the beamfinder line.

–5.5V Temperature Compensating Supply (B)

The –5.5V Temperature Compensating Supply controls four current sources: U2c, U2d, Q13, and Q15. The temperature sensing element, U2e, is connected as a diode and tracks the base-emitter temperature changes of the current-source transistors. Approximately –0.6V is provided by the voltage regulator (zener) diode, VR1, and transistor U2e.

Vertical Driver (E)

The Vertical Driver is a differential amplifier that consists of Q2, Q3, Q6, Q7, and Q14. Transistor Q15 is a temperature compensating current source (see Figure 8-71). The vertical signal from the preamplifier (0 to 800 mV) is converted to the push-pull signal needed to drive the vertical deflection plates. Dual transistor Q14 is used as the input stage of the driver circuit. Its base voltage is adjusted from the front panel with the vertical position (VERT POSN) control A2A1R6. This establishes the input reference voltage.

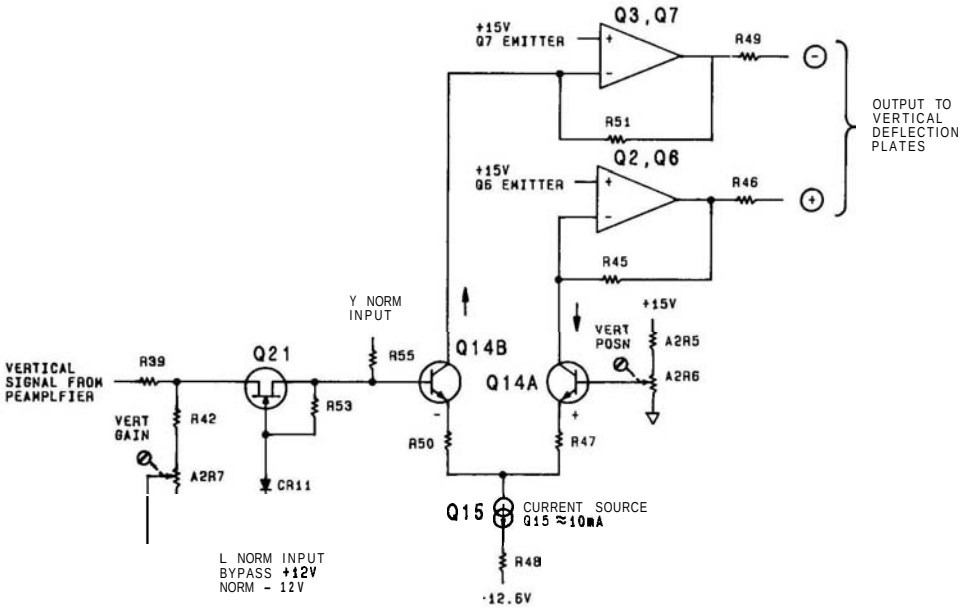

FIGURE 8-71. VERTICAL DRIVER. SIMPLIFIED SCHEMATIC

The gain of the vertical driver is set by a voltage divider consisting of R39, R42, and vertical gain control (VERT GAIN) A2A1R7. This gain control adjusts the ratio of the voltage divider. Transistor pairs Q2/Q6 and Q3/Q7 are current-to-voltage amplifiers driven by the current from the collectors of Q14a and Q14b, respectively. Diodes CR5 through CR8 prevent the bases of Q2, Q3, Q6, and Q7 from being driven negative more than 0.6V. Resistors R44 and R52 decouple the capacitive load presented by the CRT plates from the emitter of Q2 and Q3. Decoupling is necessary to prevent overshoot and ringing in the Vertical Driver.

Sweep Ramp High/Low Limit Comparator (C)

Operational amplifiers U1a and U1b are connected to form a comparator circuit. A voltage divider, comprising resistors R6, R7, and R8, establishes a high voltage reference at U1a pin 2 and a low voltage reference at U1b pin 5. The switching limits are approximately +5V and +0.7V, respectively. The signal applied to other inputs of the comparator is the YIG tuning voltage, the same signal that drives the YIG main coil. It consists of the analog tuning voltage and the sweep ramp (S + T). The tuning voltage is proportional to the instantaneous frequency to which the analyzer is tuned; the ramp sweeps from +1.2V to 4.8V.

As the YIG tuning voltage at U1a pin 3 rises above the reference at U1a pin 2 (+4.95V), the output of U1a rises to about +14V. This turns on Q4 in the blanking driver and blanks the display. If the YIG tuning voltage goes below the lower reference limit (+0.7V), the output of U1b goes to about +14V and again blanks the display. The upper and lower blanking limits correspond to 50 MHz below and 100 MHz above the ends of each band being swept.

Vertical/Baseline Comparator (D)

The Vertical/Baseline Comparator consists of Q16 and Q8. The baseline clipping reference voltage is set by the BL CLIP control A2A1R2, which varies the base voltage of Q16. The Vertical Preamplifier output signal is applied to the base of Q8 and compared to the dc reference voltage at the base of Q16. If the signal becomes more negative than the reference, Q8 turns on. This turns Q4 on and blanks the display.

Blanking Driver (F)

The Blanking Driver comprises transistors Q4 and Q9 (see Figure 8-72). Normally, Q4 is off, placing a low level at the base of Q9 and causing Q9 to be turned on. For Q9 to be turned off and provide a positive going blanking

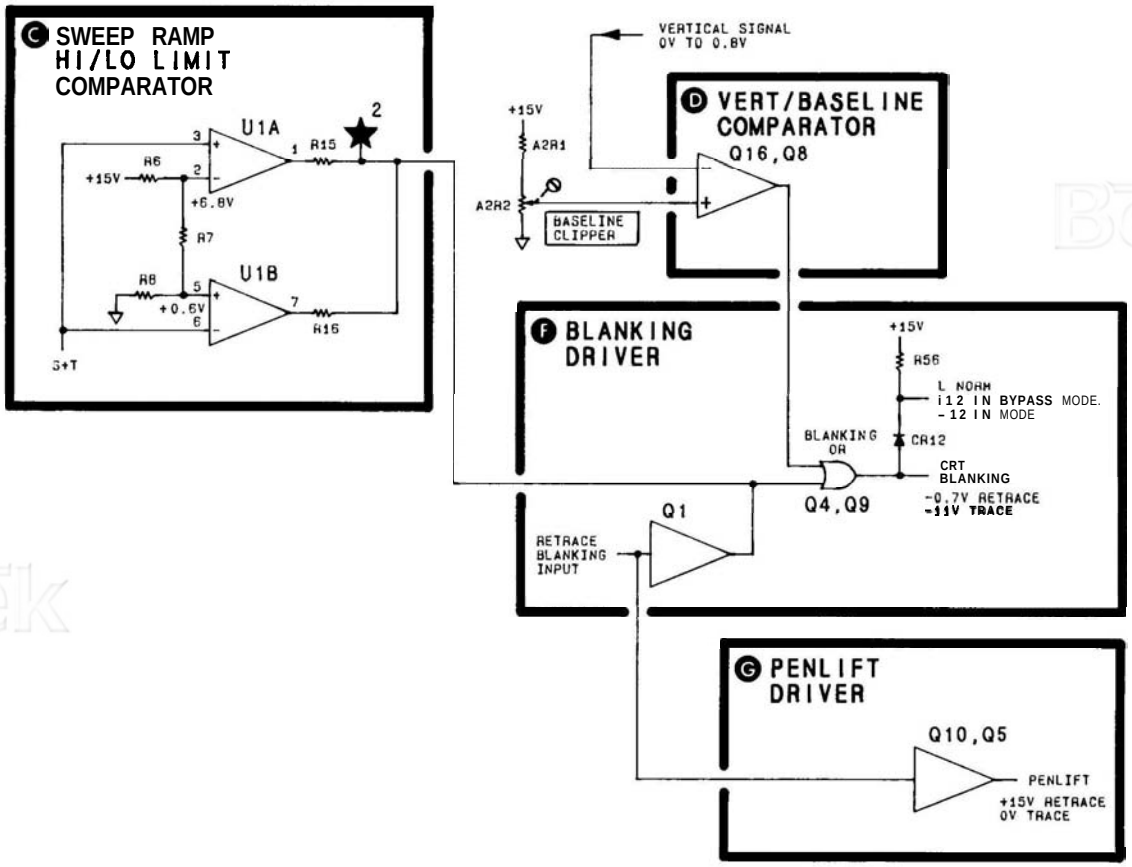

FIGURE 8-72. BLANKING CIRCUIT, SIMPLIFIED SCHEMATIC

output to the mainframe, Q4 must receive a positive voltage. The Blanking Driver is driven by the Vertical/ Baseline Comparator and the Sweep Ramp High/Low Limit Comparator. Either of these circuits can produce the positive input needed by the Blanking Driver to produce a blanking output.

Penlift Driver (G)

The display is blanked during retrace and during the dead time of the sweep ramp. Retrace blanking from the Sweep Generator/Bandwidth Control Assembly A9 is applied to the emitter of the buffer amplifier Q1. When the sweep ramp is turned off (dead time), the retrace blanking signal rises to +10V. This voltage appears at the base of Q4, blanking the display. Simultaneously, the +10V signal is applied to base of Q5, causing the collector of Q10 to rise to +15Y Transistor Q10 provides the signal used to lift the pen of the X-Y recorder during the analyzer's sweep retrace and dead time. Zener diodes VR2 and VR3 limit the output to 35V to protect Q10 from high voltage and inductive transits generated by the X-Y recorder.

Sweep Indicator Driver (H)

The front panel SWEEP indicator lights when the retrace blanking signal is low (OV). Transistor Q22 is turned on by the low retrace signal and switches on the SWEEP light-emitting diode.

VERTICAL DRIVER/BLANKING ASSEMBLY A15, TROUBLESHOOTING

Display Held in Blanked Mode: When this occurs, it may be necessary to increase the display intensity (on HP 180 series mainframes) to make the trace visible. A bright dot appears at the beginning of the trace and the BL CLIP control does not work. Most common failures are Q8 and Q16 (always change both).

The S + T line from the Frequency Control Assembly A7 can cause the comparators (block C) to latch-up.

The Sweep Generator/Bandwidth Assembly A9 retrace line input line can lock-up retrace.

Display Offset in Linear: Most common failure is Q17.

TABLE 8-13. VERTICAL DRIVER/BLANKING ASSEMBLY A15, REPLACEABLE PARTS (1 OF 2)

Reference Designation	HP Part Number	C D	Qty	Description	Mfr Code	Mfr Part Number
A15	08559-60079	S	1	VERTICAL DRIVER/BLANKING ASSEMBLY	28480	08559-60079
A15C1	0180-0197	8	4	CAPACITOR-FXD 2.2UF+-10% 20VDC TA	56289	150D225X9020A2
A15C2	0180-0197	8		CAPACITOR-FXD 2.2UF+-10% 20VDC TA	56289	150D225X9020A2
A15C3	0180-0197	8		CAPACITOR-FXD 2.2UF+-10% 20VDC TA	56289	150D225X9020A2
A15C4	0160-2055	9	2	CAPACITOR-FXD .01UF +80-20% 100VDC CER	28480	0160-2055
A15C5	0180-0197	8		CAPACITOR-FXD 2.2UF+-10% 20VDC TA	56289	150D225X9020A2
A15C6	0160-2055	9		CAPACITOR-FXD .01UF +80-20% 100VDC CER	28480	0160-2055
A15CR1	1901-0050	3	11	DIODE-SWITCHING 80V 200MA 2NS DO-35	28480	1901-0050
A15CR2	1901-0050	3		DIODE-SWITCHING 80V 200MA 2NS DO-35	28480	1901-0050
A15CR3	1901-0050	3		DIODE-SWITCHING 80V 200MA 2NS DO-35	28480	1901-0050
A15CR4	1901-0535	9	1	DIODE-SM SIG SCHOTTKY	28480	1901-0535
A15CR5	1901-0050	3		DIODE-SWITCHING 80V 200MA 2NS DO-35	28480	1901-0050
A15CR6	1901-0050	3		DIODE-SWITCHING 80V 200MA 2NS DO-35	28480	1901-0050
A15CR7	1901-0050	3		DIODE-SWITCHING 80V 200MA 2NS DO-35	28480	1901-0050
A15CR8	1901-0050	3		DIODE-SWITCHING 80V 200MA 2NS DO-35	28480	1901-0050
A15CR9	1901-0050	3		DIODE-SWITCHING 80V 200MA 2NS DO-35	28480	1901-0050
A15CR10	1901-0050	3		DIODE-SWITCHING 80V 200MA 2NS DO-35	28480	1901-0050
A15CR11	1901-0050	3		DIODE-SWITCHING 80V 200MA 2NS DO-35	28480	1901-0050
A15CR12	1901-0518	8	1	DIODE-SM SIG SCHOTTKY	28480	1901-0518
A15CR13	1901-0050	3		DIODE-SWITCHING 80V 200MA 2NS DO-35	28480	1901-0050
A15CR14	1910-0016	0	1	DIODE-GE 60V 60MA 10S DO-7	28480	1910-0016
A15J1	1251-0600	0	12	CONNECTOR-SGL CONT PIN 1.14 MM BSC SZ SQ	28480	1251-0600
A15J2	1251-0600	0		CONNECTOR-SGL CONT PIN 1.14 MM BSC SZ SQ	28480	1251-0600
A15J3	1251-0600	0		CONNECTOR-SGL CONT PIN 1.14 MM-BSC SZ SQ	28480	1251-0600
A15J4	1251-0600	0		CONNECTOR-SGL CONT PIN 1.14 MM-BSC SZ SQ	28480	1251-0600
A15J5	1251-0600	0		CONNECTOR-SGL CONT PIN 1.14 MM-BSC SZ SQ	28480	1251-0600
A15J6	1251-0600	0		CONNECTOR-SGL CONT PIN 1.14 MM-BSC SZ SQ	28480	1251-0600
A15J7	1251-0600	0		CONNECTOR-SGL CONT PIN 1.14 MM-BSC SZ SQ	28480	1251-0600
A15L1	9140-0179	1	2	INDUCTOR RF-CH-MLD 22UH 10% .166DX.385LG	28480	9140-0179
A15L2	9140-0179	1		INDUCTOR RF-CH-MLD 22UH 10% .166DX.385LG	28480	9140-0179
A15Q1	1853-0007	7	4	TRANSISTOR PNP 2N3251 SI TO-18 PD=360MW	04713	2N3251
A15Q2	1854-0234	4	4	TRANSISTOR NPN 2N3440 SI TO-5 PD=1W	3L585	2N3440
A15Q3	1854-0234	4		TRANSISTOR NPN 2N3440 SI TO-5 PD=1W	3L585	2N3440
A15Q4	1854-0069	1	1	TRANSISTOR NPN SI PD=300MW FT=600MHZ	04713	2N789
A15Q5	1854-0404	0	1	TRANSISTOR NPN SI TO-18 PD=360MW	28480	1854-0404
A15Q6	1854-0234	4		TRANSISTOR NPN 2N3440 SI TO-5 PD=1W	3L585	2N3440
A15Q7	1854-0234	4		TRANSISTOR NPN 2N3440 SI TO-5 PD=1W	3L585	2N3440
A15Q8	1853-0007	7		TRANSISTOR PNP 2N3251 SI TO-18 PD=360MW	04713	2N3251
A15Q9	1854-0019	3	1	TRANSISTOR NPN SI TO-18 PD=360MW	28480	1854-0019
A15Q10	1854-0639	7	1	TRANSISTOR NPN 2N3053S SI TO-39 PD 1W	3L585	2N3053S
A15Q11	1853-0451	5	2	TRANSISTOR PNP 2N3799 SI TO-18 PD=360MW	01295	2N3799
A15Q12	1853-0451	5		TRANSISTOR PNP 2N3799 SI TO-18 PD=360MW	01295	2N3799
A15Q13	1854-0882	8	4	TRANSISTOR NPN PD=300MW FT=200MHZ	28480	1854-0882
A15Q14	1854-0475	5	1	TRANSISTOR-DUAL NPN PD=750MW	28480	1854-0475
A15Q15	1854-0882	8		TRANSISTOR NPN PD=300MW FT=200MHZ	28480	1854-0882
A15Q16	1853-0007	7		TRANSISTOR PNP 2N3251 SI TO-18 PD=360MW	04713	2N3251
A15Q17	1855-0049	1	1	TRANSISTOR JFET DUAL N CHAN D-MODE SI	28480	1855-0049
A15Q18	1854-0882	8		TRANSISTOR NPN PD=300MW FT=200MHZ	28480	1854-0882
A15Q19	1855-0417	7	1	TRANSISTOR J FET N CHAN D-MODE TO-111 SI	28480	1855-0417
A15Q20	1854-0082	6		TRANSISTOR NPN PD=300MW FT=200MHZ	28480	1854-0882
A15Q21	1855-0020	6	1	TRANSISTOR J-FET N-CHAN D-MODE TO-18 SI	28480	1855-0020
A15Q22	1853-0007	7		TRANSISTOR PNP 2N3251 SI TO-18 PD=360MW	04713	2N3251
A15R1	2100-3123	0	1	RESISTOR-TRMR 500 10% C SIDE-ADJ 17 TRN	02111	43P501
A15R2	0757-0199	3	6	RESISTOR 21.5K 1% .125W F TC=0+-100	24546	C4-1/8-T0-2152-F
A15R3	0757-0420	3	2	RESISTOR 750 1% .125W F TC=0+-100	24546	C4-1/8-T0-751-F
A15R4	0757-0280	3	3	RESISTOR 1K 1% .125W F TC=0+-100	24546	C4-1/8-T0-1001-F
A15R5	0757-0279	0	3	RESISTOR 3.16K 1% .125W F TC=0+-100	24546	C4-1/8-T0-3161-F
A15R6	0698-3156	2	4	RESISTOR 14.7K 1% .125W F TC=0+-100	24546	C4-1/8-T0-1472-F
A15R7	0757-0290	5	1	RESISTOR 6.19K 1% .125W F TC=0+-100	19701	MF4C1/8-T0-6191-F
A15R8	0757-0424	7	3	RESISTOR 1.1K 1% .125W F TC=0+-100	24546	C4-1/8-T0-1101-F
A15R9	0698-3156	2		RESISTOR 14.7K 1% .125W F TC=0+-100	24546	C4-1/8-T0-1472-F
A15R10	0757-0199	3		RESISTOR 21.5K 1% .125W F TC=0+-100	24546	C4-1/8-T0-2152-F
A15R11	0698-3155	1	3	RESISTOR 4.64K 1% .125W F TC=0+-100	24546	C4-1/8-T0-4641-F
A15R12	0757-0416	7	3	RESISTOR 511 1% .125W F TC=0+-100	24546	C4-1/8-T0-511R-F
A15R13	0683-0475	1	1	RESISTOR 4.7 5% .25W FC TC=-400/+500	01121	CB4765
A15R14	0757-0424	7		RESISTOR 1.1K 1% .125W F TC=0+-100	24546	C4-1/8-T0-1101-F
A15R15	0757-0199	3		RESISTOR 21.5K 1% .125W F TC=0+-100	24546	C4-1/8-T0-2152-F
A15R16	0757-0199	3		RESISTOR 21.5K 1% .125W F TC=0+-100	24546	C4-1/8-T0-2152-F
A15R17	0757-0280	3		RESISTOR 1K 1% .125W F TC=0+-100	24546	C4-1/8-T0-1001-F
A15R18	0698-3155	1		RESISTOR 4.64K 1% .125W F TC=0+-100	24546	C4-1/8-T0-4641-F
A15R19	0698-0084	9	1	RESISTOR 2.15K 1% .125W F TC=0+-100	24546	C4-1/8-T0-2151-F
A15R20	0757-0416	7		RESISTOR 511 1% .125W F TC=0+-100	24546	C4-1/8-T0-511R-F

TABLE 8-13. VERTICAL DRIVER/BLANKING ASSEMBLY A15, REPLACEABLE PARTS (2 OF 2)

Reference Designation	HP Part Number	C D	Qty	Description	Mfr Code	Mfr Part Number
A15R21	0683-1055	5	1	RESISTOR 1M 5% .25W FC TC=-800/+900	01121	CB1055
A15R22	0757-0442	9	3	RESISTOR 10K 1% .125W F TC=0+-100	24546	C4-1/8-T0-1002-F
A15R23	0757-0465	6	3	RESISTOR 100K 1% .125W F TC=0+-100	24546	C4-1/8-T0-1003-F
A15R24	0757-0442	9		RESISTOR 10K 1% .125W F TC=0+-100	24546	C4-1/8-T0-1002-F
A15R25	0757-0199	3		RESISTOR 21.5K 1% .125W F TC=0+-100	24546	C4-1/8-T0-2152-F
A15R26*	0698-3153	9	1	RESISTOR 3.83K 1% .125W F TC=0+-100	24546	C4-1/8-T0-3831-F
A15R27	0698-3440	7	4	RESISTOR 196 1% .125W F TC=0+-100	24546	C4-1/8-T0-196R-F
A15R28	0698-3440	7		RESISTOR 196 1% .125W F TC=0+-100	24546	C4-1/8-T0-196R-F
A15R29	0757-0279	0		RESISTOR 3.16K 1% .125W F TC=0+-100	24546	C4-1/8-T0-3161-F
A15R30	0698-3156	2		RESISTOR 14.7K 1% .125W F TC=0+-100	24546	C4-1/8-T0-1472-F
A15R31	0698-3157	3	1	RESISTOR 19.6K 1% .125W F TC=0+-100	24546	C4-1/8-T0-1962-F
A15R32	0698-3444	1	4	RESISTOR 316 1% .125W F TC=0+-100	24546	C4-1/8-T0-316R-F
A15R33	0757-0424	7		RESISTOR 1.1K 1% .125W F TC=0+-100	24546	C4-1/8-T0-1101-F
A15R34	0698-3156	2		RESISTOR 14.7K 1% .125W F TC=0+-100	24546	C4-1/8-T0-1472-F
A15R35	0757-0279	3		RESISTOR 3.16K 1% .125W F TC=0+-100	24546	C4-1/8-T0-3161-F
A15R36	0757-0280	7	1	RESISTOR 5.62K 1% .125W F TC=0+-100	24546	C4-1/8-T0-5621-F
A15R37	0757-0465	6		RESISTOR 100K 1% .125W F TC=0+-100	24546	C4-1/8-T0-1003-F
A15R38	0757-0199	3		RESISTOR 21.5K 1% .125W F TC=0+-100	24546	C4-1/8-T0-2152-F
A15R39	0698-3444	1		RESISTOR 316 1% .125W F TC=0+-100	24546	C4-1/8-T0-316R-F
A15R40	0757-0394	0	1	RESISTOR 51.1 1% .125W F TC=0+-100	24546	C4-1/8-T0-51R1-F
A15R41	0698-3155	1		RESISTOR 4.64K 1% .125W F TC=0+-100	24546	C4-1/8-T0-4641-F
A15R42	0757-0416	7		RESISTOR 511 1% .125W F TC=0+-100	24546	C4-1/8-T0-511R-F
A15R43	0757-0442	9		RESISTOR 10K 1% .125W F TC=0+-100	24546	C4-1/8-T0-1002-F
A15R44	0698-3444	1		RESISTOR 316 1% .125W F TC=0+-100	24546	C4-1/8-T0-316R-F
A15R45	0757-0837	6	2	RESISTOR 8.25K 1% .5W F TC=0+-100	28480	0757-0837
A15R46	0757-0844	5	2	RESISTOR 16.2K 1% .5W F TC=0+-100	28480	0757-0844
A15R47	0698-3440	7		RESISTOR 196 1% .125W F TC=0+-100	24546	C4-1/8-T0-196R-F
A15R48	0757-0420	3		RESISTOR 750 1% .125W F TC=0+-100	24546	C4-1/8-T0-751-F
A15R49	0757-0844	5		RESISTOR 16.2K 1% .5W F TC=0+-100	28480	0757-0844
A15R50	0698-3440	7		RESISTOR 196 1% .125W F TC=0+-100	24546	C4-1/8-T0-196R-F
A15R51	0757-0837	6		RESISTOR 8.25K 1% .5W F TC=0+-100	28480	0757-0837
A15R52	0698-3444	1		RESISTOR 316 1% .125W F TC=0+-100	24546	C4-1/8-T0-316R-F
A15R53	0698-3260	9	1	RESISTOR 464K 1% .125W F TC=0+-100	28480	0698-3260
A15R54	0698-3446	3	1	RESISTOR 383 1% .125W F TC=0+-100	24546	C4-1/8-T0-383R-F
A15R55	0757-0280	3		RESISTOR 1K 1% .125W F TC=0+-100	24546	C4-1/8-T0-1001-F
A15R56	0757-0465	6		RESISTOR 100K 1% 125W F TC=0+ 100	24546	C4-1/8-T0-1003-F
A15R57	0698-0083	8	1	RESISTOR 1.96K 1% 125W F TC=0+ 100	24546	C4-1/8-T0-1961-F
A15TP1	1251-0600	0		CONNECTOR-SGL CONT PIN 1.14 MM-BSC S7 SQ	28480	1251-0600
A15TP2	1251-0600	0		CONNECTOR-SGL CONT PIN 1.14 MM BSC-SZ SQ	28480	1251-0600
A15TP3	1251-0600	0		CONNECTOR-SGL CONT PIN 1.14-MM-BSC-S7 SQ	28480	1251-0600
A15TP4	1251-0600	0		CONNECTOR-SGL CONT PIN 1.14-MM-BSC-SZ SQ	28480	1251-0600
A15TP5	1251-0600	0		CONNECTOR-SGL CONT PIN 1.14-MM-DSC-SZ SQ	28480	1251-0600
A15U1	1826-0092	3	1	IC OP AMP CP DUAL TO-99 PKG	28480	1826-0092
A15U2	1858-0032	8	1	TRANSISTOR ARRAY 14 PIN PLSTC DIP	3L585	CA3146E
A15VR1	1902-0033	4	1	DIODE ZNR 1N823 6.2V 5% DO-7 PD=.4W	24046	1N823
A15VR2	1902-0202	9	1	DIODE ZNR 15V 5% PD=1W IR=5UA	28480	1902-0202
A15VR3	1902-0556	6	1	DIODE ZNR 20V 5% PD=1W IR=5UA	28480	1902-0556
				A15 MISCELLANEOUS PARTS		
	1200-0173	5	5	INSULATOR-XSTR DAP-GL	28480	1200-0173

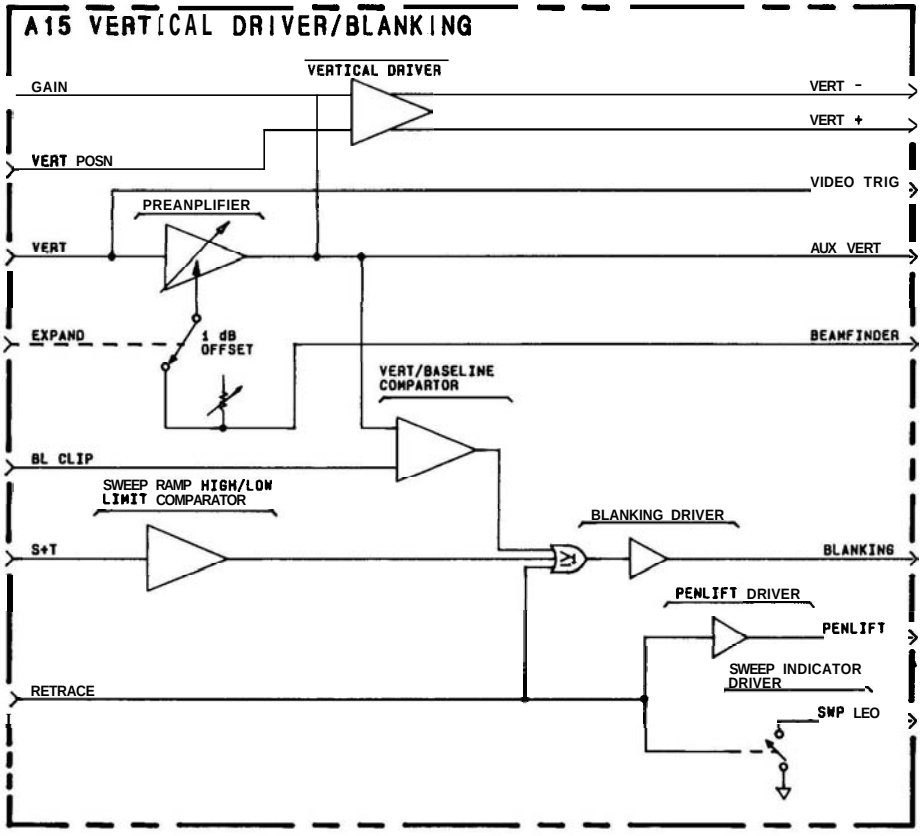

FIGURE 8-73. VERTICAL DRIVER/BLANKING ASSEMBLY A15, BLOCK DIAGRAM

A15
VERTICAL DRIVER/BLANKING ASSEMBLY

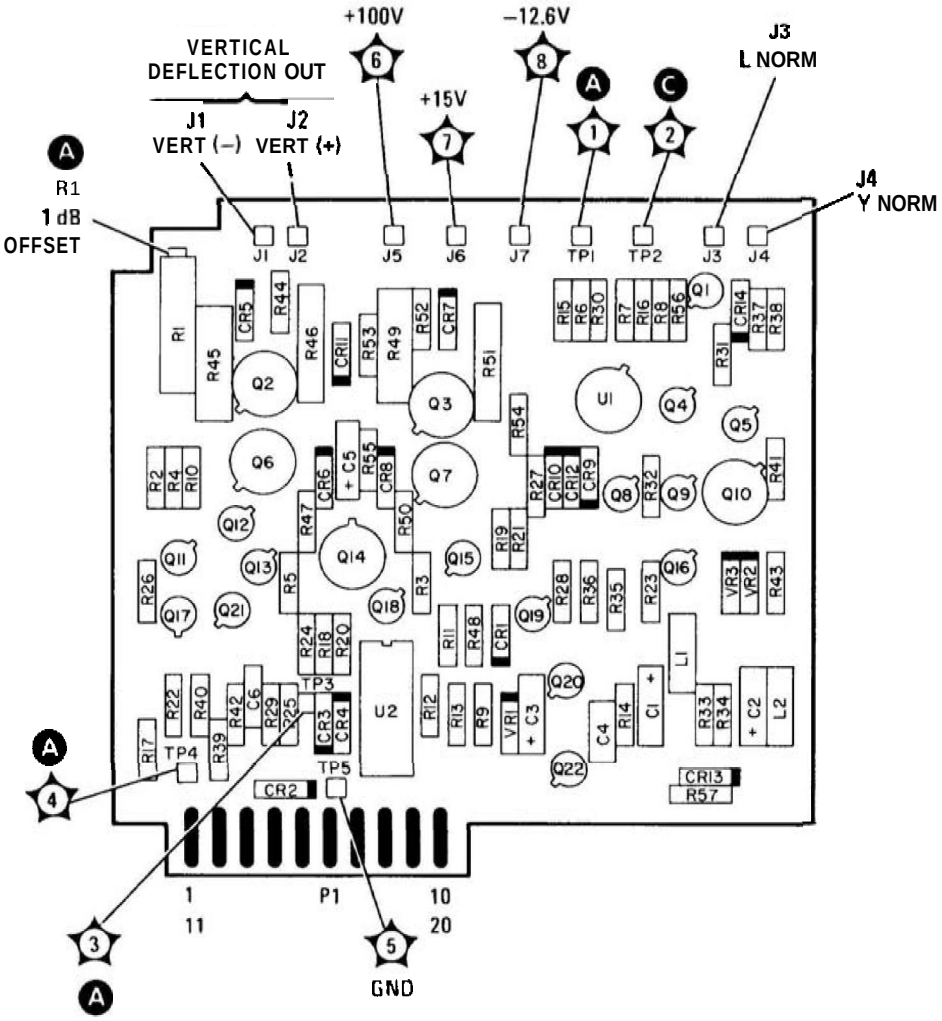

FIGURE 8-74. VERTICAL DRIVER/BLANKING ASSEMBLY A15, COMPONENT LOCATIONS

A15 VERTICAL DRIVER/BLANKING ASSEMBLY
08559-60029

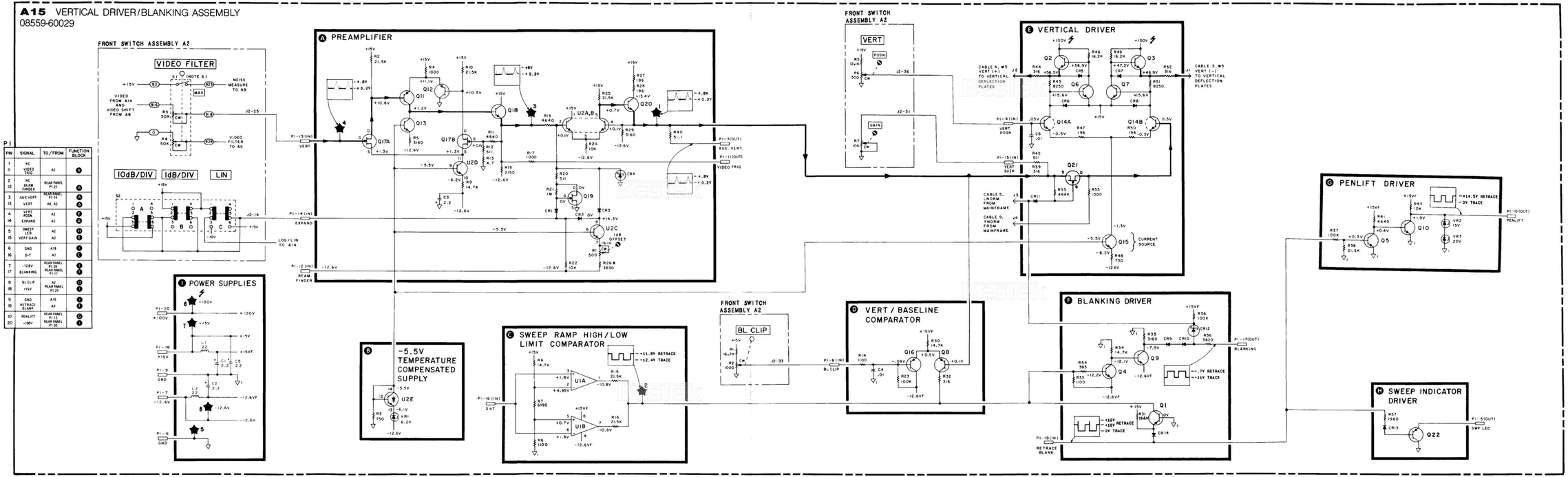

PI

PIN	SIGNAL	TO/FROM	FUNCTION BLOCK
1 thru 11	NC VIDEO TRIG	A2	A
2	NC FROM FINDER	REAR PANEL P1 21	A
3	AUX VERT	REAR PANEL P1 24	A
13	VERT	A8, A2	A
4	VERT POSN	A2	E
14	EXPAND	A2	A
5	SWEEP LED	A2	H
15	VERT GAIN	A2	E
6	GND	A16	E
16	S-T	A3	C
7	-12.6V	REAR PANEL P1 28	E
17	BLANKING	REAR PANEL P1 17	F
8	BL CLIP	A2	D
18	+15V	REAR PANEL P1 29	E
9	GND	A16	E
19	RETRACE BLANK	A3	F
10	PENLIFT	REAR PANEL P1 13	G
20	+100V	REAR PANEL P1 30	E

NOTES:

1. REFERENCE DESIGNATORS WITHIN THIS ASSEMBLY ARE ABBREVIATED. PREFIX ABBREVIATION WITH ASSEMBLY NUMBER FOR COMPLETE REFERENCE DESIGNATOR.
2. UNLESS OTHERWISE INDICATED: RESISTANCE IN OHMS (Ω) CAPACITANCE IN MICROFARADS (μF) INDUCTANCE IN MICROHENRIES (μH)
3. ASTERISK (*) INDICATES FACTORY SELECTED COMPONENT. VALUE SHOWN IS TYPICAL.
4. TRANSISTOR AND IC PIN CONFIGURATIONS: (BOTTOM VIEW)

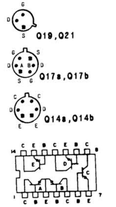

A15

FIGURE 8-73. VERTICAL DRIVER/BLANKING ASSEMBLY A15, BLOCK DIAGRAM

TABLE 8-14. MOTHERBOARD ASSEMBLY A16, REPLACEABLE PARTS (1 OF 2)

Reference Designation	HP Part Number	C D	Qty	Description	Mfr Code	Mfr Part Number
A16	08559-60376	2	1	MOTHERBOARD ASSEMBLY	28480	08559-60376
A16C1	0180-0197	8	1	CAPACITOR-FXD 2.2UF+-10% 20VDC TA	56289	150D225X9020A2
A16C2	0180-2205	3	1	CAPACITOR-FXD .33UF+-10% 35VDC TA	56289	150D334X9035A2
A16C3	0160-4084	8	2	CAPACITOR-FXD .1UF +-20% 50VDC CER	28480	0160-4084
A16C4	0160-2055	9	16	CAPACITOR-FXD .01UF +80-20% 100VDC CER	28480	0160-2055
A16C5	0160-2055	9		CAPACITOR-FXD .01UF +80-20% 100VDC CER	28480	0160-2055
A16C6	0160-3879	7	1	CAPACITOR-FXD .01UF +-20% 100VDC CER	28480	0160-3879
A16C7	0160-2055	9		CAPACITOR-FXD .01UF +80-20% 100VDC CER	28480	0160-2055
A16C8	0160-2055	9		CAPACITOR-FXD .01UF +80-20% 100VDC CER	28480	0160-2055
A16C9	0160-2055	9		CAPACITOR-FXD .01UF +80-20% 100VDC CER	28480	0160-2055
A16C10	0160-2055	9		CAPACITOR-FXD .01UF +80-20% 100VDC CER	28480	0160-2055
A16C11	0160-2055	9		CAPACITOR-FXD .01UF +80-20% 100VDC CER	28480	0160-2055
A16C12	0160-2055	9		CAPACITOR-FXD .01UF +80-20% 100VDC CER	28480	0160-2055
A16C13	0160-2055	9		CAPACITOR-FXD .01UF +80-20% 100VDC CER	28480	0160-2055
A16C14	0160-2055	9		CAPACITOR-FXD .01UF +80-20% 100VDC CER	28480	0160-2055
A16C15	0160-2055	9		CAPACITOR-FXD .01UF +80-20% 100VDC CER	28480	0160-2055
A16C16	0160-2055	9		CAPACITOR-FXD .01UF +80-20% 100VDC CER	28480	0160-2055
A16C17	0160-2055	9		CAPACITOR-FXD .01UF +80-20% 100VDC CER	28480	0160-2055
A16C18	0160-2055	9		CAPACITOR-FXD .01UF +80-20% 100VDC CER	28480	0160-2055
A16C19	0160-2055	9		CAPACITOR-FXD .01UF +80-20% 100VDC CER	28480	0160-2055
A16C20	0160-3456	6	1	CAPACITOR-FXD 1000PF +-10% 1KVDC CER	28480	0160-3456
A16C21	0160-4084	8		CAPACITOR-FXD .1UF +-20% 50VDC CER	28480	0160-4084
A16C22	0180-2500	1	1	CAPACITOR-FXD 1500UF+50-10% 16VDC AL	37942	TT152U016G1C3P
A16C23	0160-2055	9		CAPACITOR-FXD .01UF +80-20% 100VDC CER	28480	0160-2055
A16C24	0160-3878	6	2	CAPACITOR-FXD 1000PF +-20% 100VDC CER	28480	0160-3878
A16C25	0160-3878	6		CAPACITOR-FXD 1000PF +-20% 100VDC CER	28480	0160-3878
A16C26	0160-3877	5	1	CAPACITOR-FXD 100PF +-20% 200VDC CER	28480	0160-3877
A16CR1	1901-0376	6	1	DIODE-GEN PRP 35V 50MA DO-35	28480	1901-0376
A16CR2	1901-0050	3	1	DIODE-SWITCHING 80V 200MA 2NS DO-35	28480	1901-0050
A16J1	1251-3782	5	2	CONNECTOR 40 PIN M RECTANGULAR	28480	1251-3782
A16J2	1251-3782	5		CONNECTOR 40 PIN M RECTANGULAR	28480	1251-3782
A16J3	1250-0257	1	1	CONNECTOR RF SMB M PC 50 OHM	28480	1250-0257
A16J4	1250-0543	6	1	CONNECTOR RF SMB M PC 50 OHM	28480	1250-0543
A16J5	1251-8200	2	1	CONN POST TYPE 100 PIN SPCG 9-TONI	28480	1251-8200
A16L1	08411-6008	5	3	CHOKE FERRITE	28480	08411-6008
A16L2	08411-6008	5		CHOKE FERRITE	28480	08411-6008
A16L3	08411-6008	5		CHOKE FERRITE	28480	08411-6008
A16L4	9100-2251	0	1	INDUCTOR RF-CH-MLD 220NH 10% .105DX.26LG	28480	9100-2251
A16Q1	1855 0417	7	1	TRANSISTOR J-FET N-CHAN D-MODE TO-18 SI	28480	1855-0417
A16R1	0757-0346	2	3	RESISTOR 10 1% .125W F TC=0+-100	24546	C4-1/8-T0-10R0-F
A16R2	0757-0465	6	1	RESISTOR 100K 1% .125W F TC=0+-100	24546	C4-1/8-T0-1003-F
A16R3	0698-5368	2	1	RESISTOR 3.74K .25% .125W F TC=0+-50	28480	0698-5368
A16R4	2100-1757	2	1	RESISTOR-TRMR 500 5% 4W SIDE-ADJ 1-TRN	28480	2100-1757
A16R5	0757-0444	1	1	RESISTOR 12.1K 1% .125W F TC=0+-100	24546	C4-1/8-T0-1212-F
A16R6	0698-3442	9	1	RESISTOR 237 1% .125W F TC=0+-100	24546	C4-1/8-T0-237R-F
A16R7	0757-0395	1	1	RESISTOR 56.2 1% .125W F TC=0+-100	24546	C4-1/8-T0-56R2-F
A16R8	0757-0346	2		RESISTOR 10 1% .125W F TC=0+-100	24546	C4-1/8-T0-10R0-F
A16R9	0757-0346	2		RESISTOR 10 1% .125W F TC=0+-100	24546	C4-1/8-T0-10R0-F
A16R10	0698-3260	9	1	RESISTOR 464K 1% .125W F TC=0+-100	28480	0698-3260
A16TP1	1251-0600	0	1	CONNECTOR-SGL CONT PIN 1.14 MM-BSC-SZ SQ	28480	1251-0600
A16U1	1826-0122	3	1	IC 7805 V RGLTR TO-220	07263	7805UC
A16VR1	1902-0631	8	1	DIODE ZNR 1N5351B 14V 5% PD=5W TC=+75%	04713	1N5351B
A16VR2	1902-0632	9	1	DIODE ZNR 1N5354B 17V 5% PD=5W TC=+75%	04713	1N5354B
A16VR3	1902-3182	0	1	DIODE-ZNR 12.1V 5% DO-35 PD=.4W	28480	1902-3182
A16W1	08559-60081	9	1	CONNECTOR ASSEMBLY, MAINFRAME	28480	08559-60081
A16W2	08559-60061	5	1	CABLE ASSEMBLY, YIG	28480	08559-60061
A16W3	08559-60089	7	1	CABLE ASSEMBLY, MIXER	28480	08559-60089
A16XA7	1251-1365	6	7	CONNECTOR-PC EDGE 22 CONT/ROW 2 ROW;	28480	1251-1365
A16XA8	1251-1365	6		CONNECTOR-PC EDGE 22-CONT/ROW 2-ROWS	28480	1251-1365
A16XA9	1251-1365	6		CONNECTOR-PC EDGE 22-CONT/ROW 2-ROW;	28480	1251-1365
A16XA10P1	1251-1626	2	1	CONNECTOR-PC EDGE 12-CONT/ROW 2-ROWS	28480	1251-1626
A16XA10P2	1251-2034	8	2	CONNECTOR-PC EDGE 10-CONT/ROW 2-ROWS	28480	1251-2034
A16XA11	1251-1365	6		CONNECTOR PC EDGE 22-CONT/ROW 2 ROWS	28480	1251-1365
A16XA12	1251-1365	6		CONNECTOR PC EDGE 22-CONT/ROW 2-ROWS	28480	1251-1365
A16XA13	1251-1365	6		CONNECTOR-PC EDGE 22-CONT/ROW 2 ROWS	28480	1251-1365
A16XA14	1251-1365	6		CONNECTOR -PC EDGE 22-CONT/ROW 2-ROWS	28480	1251-1365
A16XA15	1251-2034	8		CONNECTOR-PC EDGE 10-CONT/ROW 2-ROWS	28480	1251-2034

TABLE 8-14. MOTHERBOARD ASSEMBLY A16, REPLACEABLE PARTS (2 OF 2)

Reference Designation	HP Part Number	C D	Qty	Description	Mfr Code	Mfr Part Number
				A16 MISCELLANEOUS PARTS		
	1400-0249	0	1	CABLE TIE ,062-,625-DIA ,091-WD NIL	06383	PLT1M-0
	1251-2293	1	3	CONNECTOR-SGL CONT SKT ,032 IN BSC SZ	28480	1251-2293
	5020-0176	0	3	INSULATOR RCCPT	28480	5020-0176

A16
MOTHERBOARD ASSEMBLY

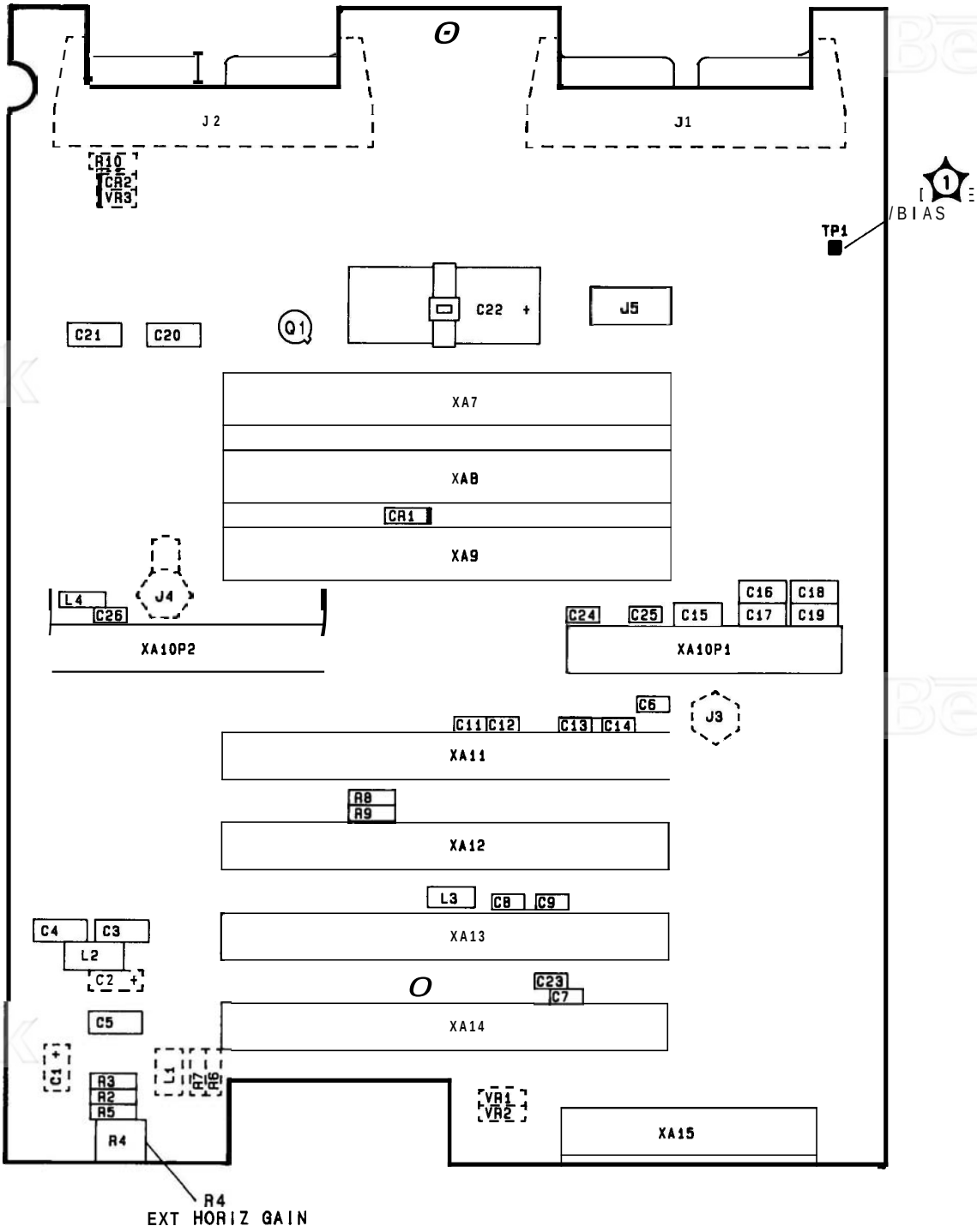

FIGURE 876. MOTHERBOARD ASSEMBLY A16, COMPONENT LOCATIONS

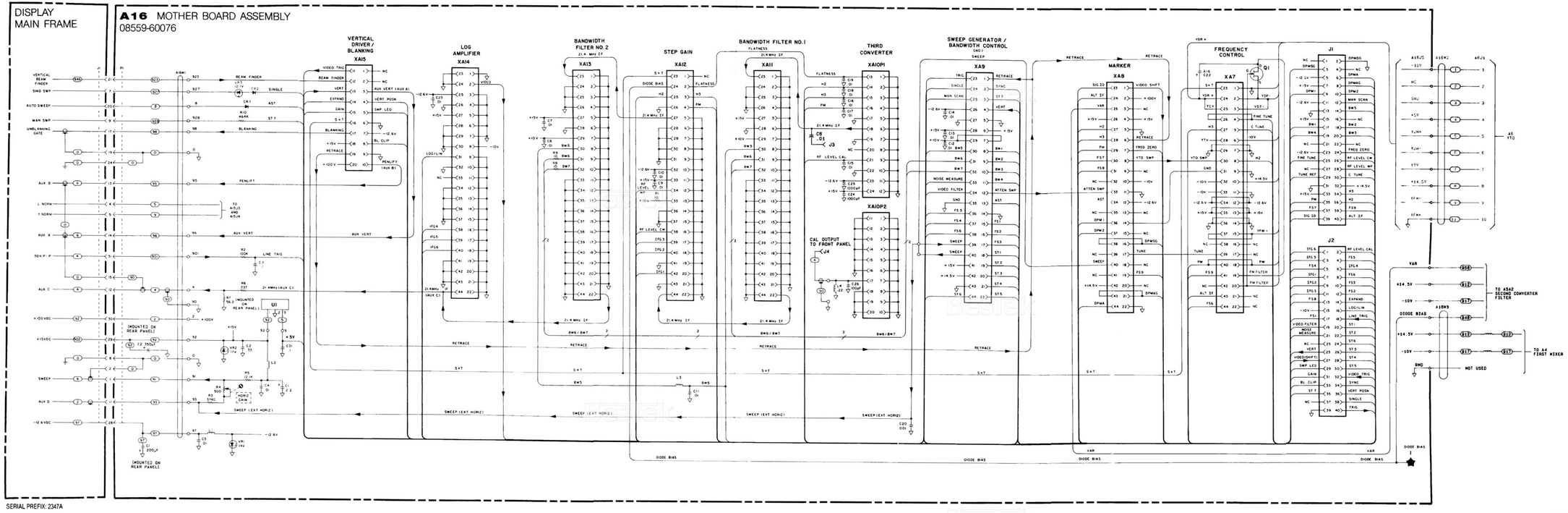

A16

FIGURE 8-77. MOTHERBOARD ASSEMBLY A16, SCHEMATIC DIAGRAM
8-1956-196

LEFT SIDE VIEW

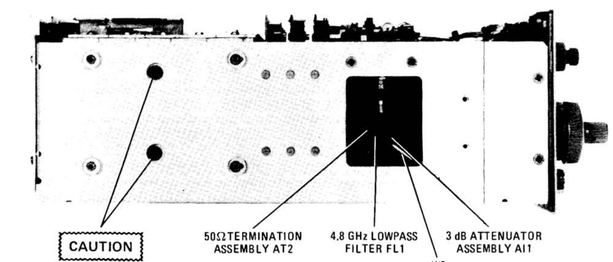

NYLON SCREWS MUST BE LOOSENED BEFORE REMOVING A12 STEP GAIN.

BOTTOM VIEW

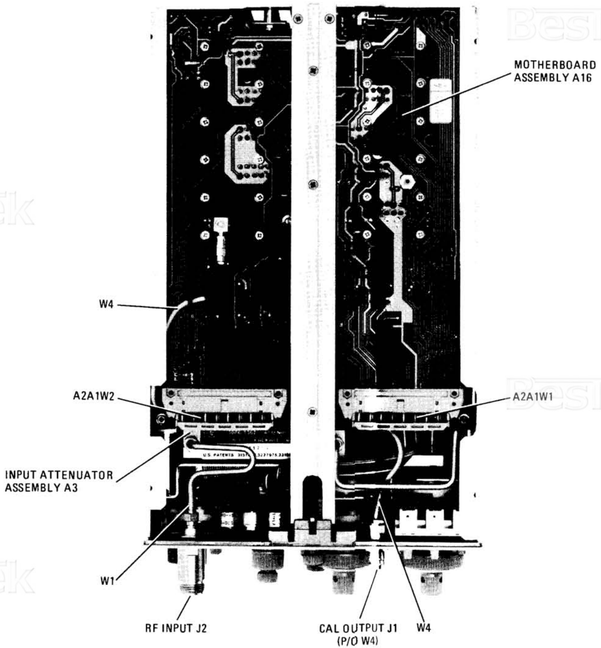

TOP VIEW

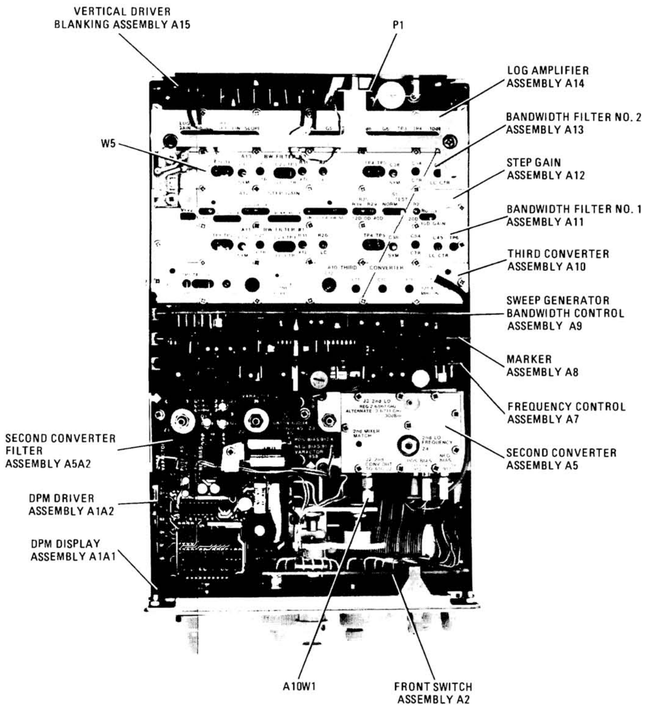

FIGURE 8-78. MAJOR ASSEMBLIES, LOCATIONS

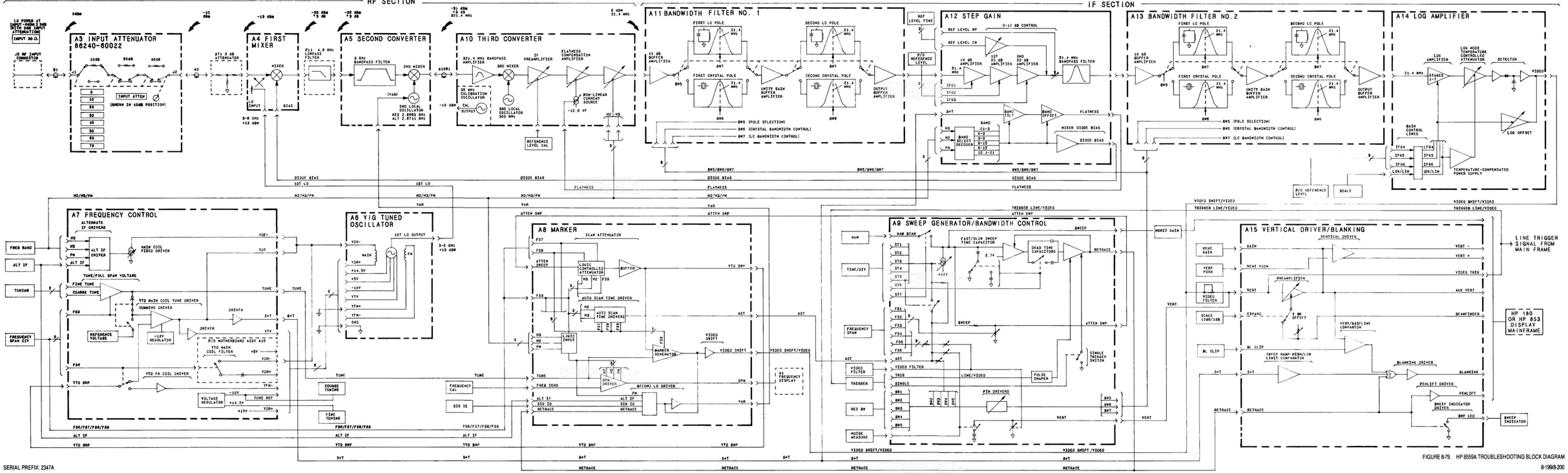

FIGURE 8-79. HP 8559A TROUBLESHOOTING BLOCK DIAGRAM

BesTek

HEWLETT PACKARD

HEWLETT-PACKARD SALES AND SERVICE OFFICES

To obtain servicing information or to order replacement parts, contact the nearest Hewlett-Packard Sales and Service Office listed in the HP Catalog, or contact the nearest regional office listed below:

IN THE UNITED STATES

CALIFORNIA
3939 Lankershim Boulevard
North Hollywood 91604

GEORGIA
P.O. Box 105005
2000 South Park Place
Atlanta 30339

ILLINOIS
5201 Tollview Drive
Rolling Meadows 60008

NEW JERSEY
W. 130 Century Road
Paramus 07652

IN CANADA

Hewlett-Packard (Canada) Ltd.
17500 South Service Road
Trans-Canada Highway
Kirkland, Quebec H9J 2M5

IN FRANCE

Hewlett-Packard France
F-91947 Les Ulis Cedex
Orsay

IN GERMAN FEDERAL REPUBLIC

Hewlett-Packard GmbH
Vertriebszentrale Frankfurt
Berner Strasse 117
Postfach 560 140
D-6000 Frankfurt 56

IN GREAT BRITAIN

Hewlett-Packard Ltd.
King Street Lane
Winnersh, Wokingham
Berkshire RC11 5AR

IN OTHER EUROPEAN COUNTRIES

SWITZERLAND
Hewlett-Packard (Schweiz) AC
29 Chemin Chateau Bloc
CH-1219 LeLignon-Geneva

IN ALL OTHER LOCATIONS

Hewlett-Packard Inter-Americas
3200 Hillview Avenue
Palo Alto, California 94304

BesTek