CD/CDV/LD
MULTI DISC PLAYER

FUNAI

SERVICE MANUAL

MD-K919

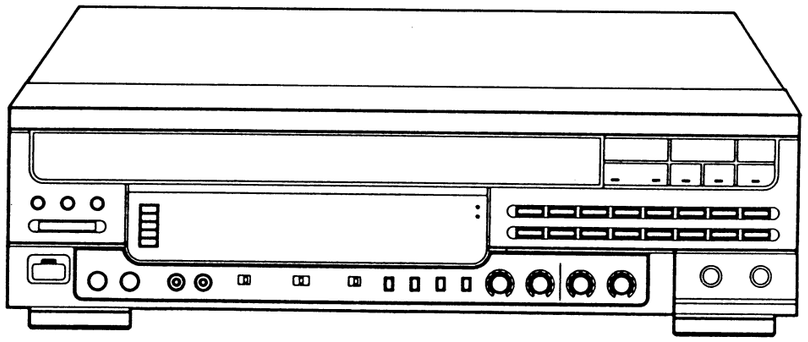

Table of Contents

Important Safety Notice 2
General Specification 3
Performance Specifications 6
Description of Mechanism Operation 8
Disassembly Procedure of Cabinet 9
Disassembly Procedure of Mechanism 9
Block Diagram 13
Troubleshooting 15
IC Internal Diagram 44
Wiring Diagram 56
P.C.Board Views 58
Standard Notes for Schematic Diagram 66
Electrical Parts List 71
Cabinet Parts List 91
Cabinet Exploded View 92
LV Mechanism Exploded View 93
LV Mechanism Parts List 94

IMPORTANT SAFETY NOTICE

Proper service and repair is important to the safe, reliable operation of all Funai Equipment. The service procedures recommended by Funai and described in this service manual are effective methods of performing service operations. Some of these service special tools should be used when and as recommended.

It is important to note that this service manual contains various CAUTIONS and NOTICES which should be carefully read in order to minimize the risk of personal injury to service personnel. the possibility exists that improper service methods may damage the equipment. It also is important to understand that these CAUTIONS and NOTICES ARE NOT EXHAUSTIVE. Funai could not posibly know, evaluate and advice the service trade of all conceivable ways in which service might be done or of the possible hazardous consequences of each way. Consequently, Funai has not undertaken any such broad evalution. Accordingly, a servicer who uses a service procedure or tool which is not recommended by Funai must first safety himself throughly that neither his safety nor the safe operation of the equipment will be jeopardized by the service method selected.

GENERAL SPECIFICATION

A. CONTROLS

1) Play	: Push
2) Open/Close	: Push
3) Memo/Stop	: Push
4) Pause	: Push
5) Music (Track) Search	: 2-Push (Skip Up/Skip Down)
6) Intro Scan	: Push
7) Random Play	: Push
8) Once-More	: Push
9) Program ON/OFF	: Push Program Memory Max. 20 Steps
10) Program Clear	: Push
11) CX	: Push
12) Power	: Push
13) Disc 10-Key Operation	: Push 0 - 15, +10
14) Edit	: Push
15) Digital Key-Control	: Push
16) Voice Fader	: Push-Push
17) Audio Monitor	: Push-Push
18) TV/DISC	: Push-Push
19) HiFi MPX	: Push-Push
20) AUX IN Switch	: Slide (AUX - DISC)
21) SORROUND/NORMAL/KARAOKE	: Slide (Sorround-Normal-Karaoke)
22) KEY CON./VOICE CHANGER	: Slide (Key Con.-Voice Changer)
23) Phone Control Volume	: Rotary
24) MPX Balance	: Rotary
25) Digital Echo Control	: Rotary
26) Mic Volume Control	: Rotary X2 (Mic-1, Mic-2)

B. INDICATOR

1) Chapter Number	: Flouorescent Display
2) Track/Program Number	: ditto
3) Frame Counter	: ditto
4) Digital Audio	: ditto
5) Music/Elaps, Remain Time	: ditto
6) Play/Pause	: ditto
7) CX	: ditto
8) LD/CDV/CD	: ditto
9) CLV/CAV	: ditto
10) Disc	: ditto
11) Edit	: ditto
12) Memo	: ditto
13) Intro.	: ditto
14) Prog.	: ditto
15) 1/L, 2/R	: ditto
16) Random	: ditto
17) Repeat	: ditto
18) A-B Repeat	: ditto
19) 1/Chp.Tr	: ditto

20) All/Side	: ditto
21) Over	: ditto
22) Music Calendar	: ditto
23) Power	: LED (Red)
24) Digital Key-Control	: LED (White)
25) Voice Fader	: LED (Red)
26) HiFi MPX	: ditto

C. SYSTEM

1) 1-Pick Up, 1-Spindle Motor	
a. Pick Up System	: Object Lens-Drive Optical Pick-Up
b. Object Lens-Drive System	: 2-Dimensional Pararell Drive
c. Optical Source	: Semiconductor Laser
d. Wavelength	: 780nm
e. Tracking System	: 3-Beam Tracking System
2) Laser Vision Method	
3) Meet NTSC Specification in USA	
4) Playable Disc	
a. LD	: 30 cm, 20 cm (CAV)
: 30 cm, 20 cm (CLV)	
b. CDV	: 12 cm
c. Video Single	: 12 cm
d. CD	: 12 cm, 8 cm
5) Digital Audio	
a. Sampling Frequency	: 44.1 KHz
b. Quentization Number	: 16 bit Linear/Channel
c. Transmission Bit Rate	: 4.3218Mbit/Sec
d. Transmission Clock	: 16.9344 MHz
e. Error Correction	: CIRC C1; Double-Correction
C2; Double-Correction	
d. D/A Converter	: 1 bit △ Σ Modulation System
e. Filter	: 8 fs Digital Filter + 2-Pole Analog Filter
6) Analog Audio	
a. CX Noise Reduction System	

D. TERMINALS

1) Video Output	: RCA Pin Jack (2pcs , Yellow)
2) Audio Output (D/A)	: RCA Pin Jack (2pcs X2,1/L-WHT,2/R-RED)
3) RF Modulator	: VHF IN/ VHF OUT (Chan. 3-ch/4-ch)
4) Microphone Jack	: D: 6 mm X 2
5) Headphone Jack	: D: 6 mm, JIS (Chip:LEFT/ Ring:RIGHT)
6) AC Cord	: KEMA Cord Black 2m Length
7) S-Video Output	: Y-C Separate Output Terminal
8) Digital Audio Output	: Optical
9) Voltage Selector	: Slide 110V/220V

E. MECHANICALS

1) Dimension	: 430(W) X 121(H) X 403(D)
2) Weight	: 8.7 Kg

F. REMOTE CONTROL

1) Power ON/OFF	: Push
2) Open/Close	: Push
3) Repeat (1/All, A-B)	: Push
4) Display	: Push
5) Auto Digital/Analog	: Push
6) Multi Speed (+/-)	: Push
7) Still/Step	: Push
8) Program ON/OFF	: Push
9) Program Clear	: Push
10) Direct 10-Keys	: Push 1,2,3,4,5,6,7,8,9,0,+10
11) Skip (UP/Down)	: Push
12) Scan (FF./FR.)	: Push
13) Intro Scan	: Push
14) Memo Stop/Stop	: Push
15) Pause	: Push
16) Play	: Push
17) Frame/Time	: Push
18) Digital Key-Control	: Push

G. OTHERS

1) Power Supply	: AC 110/220 V 50/60 Hz
2) Power Dimension	: 36W
3) Safety	: IEC65

H. ACCESSORIES

: Remote Control Unit	1
: UM-4/AAA(RO3) Dry Battery	2
: Audio Cable	1
: Video Cable	1
: RF Antenna Cable	1
: Antenna Adapter	1
: Owner's Manual	1

PERFORMANCE SPECIFICATIONS

A. Visual Section (Video Section)

ITEM	CONDITIONS	UNIT	NOMINAL	LIMIT	REMARKS
1. Luminance S/N Ratio HPF -- 10kHz LPF -- 4.2MHz	Flat - Average	dB	44	38	
	WTD - Average	dB	49	43	
2. Chrominance S/N Ratio HPF -- 10kHz LPF -- 500kHz	AM	dB	43	37	
	PM	dB	39	33	
3. Video Crosstalk		dB	44	38	
4. Video Output	Load Imp. 75Ω	V	0.92	0.85~1.0	
5. Video Freq. Response		dB	-5	+1~ -9	Pioneer Disc Ref

B. RF Modulator

ITEM	CONDITIONS	UNIT	NOMINAL	LIMIT	REMARKS
1. Video Output		dBμV	66.5	+3 / -3.5	
2. Video Modulation		%	77	+/ - 5	
3. Audio Modulation		%	100	+/ -20	
4. Audio S/N Ratio		dB	--	>45	
5. Audio Distortion		%	--	<3.0	

C. Analog Audio Output Section

ITEM	CONDITIONS		UNIT	NOMINAL	LIMIT	REMARKS
1. S/N Ratio	CX OFF	Flat-Average	dB	53	46	
		JIS- Average	dB	54	49	
2. Harmonic Distortion	1kHz = 100%		%	0.3	1.0	
3. Freq. Response	3kHz = 25%		dB	-12	-15~ +9	
4. Channel Separation	1kHz = 100%		dB	52	46	
5. Output Level	1kHz = 100%, CX OFF		V	0.55	0.35~0.7	
6. Channel Balance			dB		<2	

D. Digital Audio Output Section

ITEM	CONDITIONS	UNIT	NOMINAL	LIMIT	REMARKS
1. S/N Ratio Output Level	Flat-Average	dB	79	73	
	JIS-Average	dB	90	80	
2. Harmonic	1kHz, 30kHz LPF	%	0.03	0.06	
3. Freq. Response	20Hz ~ 20kHz	dB	-1	+3~-5	
4. Output Level	1kHz 0dB	V	1.8	1.4~2.2	
5. Channel Separation	1kHz	dB	75	68	
6. Channel Balance		dB		<2	
7. De-Emphasis	1kHz	dB	-0.37	±1.0	
	5kHz	dB	-4.53	±2.5	
	16kHz	dB	-9.04	±2.5	
8. FF/REW Mute Level		dB	-12	-14~-10	
9. HP Output	1kHz 0dB Signal Level	mV	300		8 Ω Load

E. Playability

ITEM	CONDITIONS	UNIT	NOMINAL	LIMIT	REMARKS
1. Eccentric	LD	μm		80	
	CDV (Video Part)	μm		70	
	CD	μm		70	
2. Vertical Deviation	LD	g		10	
	CDV (Video Part)	μm		500	
	CD	μm		500	
3. Playability	Wedge	μm		500	
	Black Dot	μm		500	
	Finger Print	Immune			
4. Shock		g		>25	
5. Open --> Play Time	CAV 30cm	Sec		20	
6. Play --> Open Time		Sec		15	

All items are measured without pre-emphasis unless otherwise specified.

Test Disc: LD Sony REF - 08A
CD Sony Type 4 Disc and PHILIPS 5A
Room Ambient: +25°C
Power Supply: AC110V/220V 50/60Hz
Load Imp.: Video Output 75Ω / Audio Output 10kΩ
RF Modulator 75Ω

NOTE: Nominal specs represent the design specs. All units should be able to approximate these - some will exceed and some may drop slightly below these specs. Limit specs represent the absolute worst condition that still might be considered acceptable; in no case should a unit fail to meet limit specs.

DESCRIPTION OF MECHANISM OPERATION

Description of Mechanism

Figure 1 shows the initial condition (power off, no disk) of the mechanism (top view).
Figure 2 shows the timing chart (relative time) from the power up to start of the program playback.
As you press POWER then OPEN/CLOSE, the loading motor rotates clockwise to lift the pickup unit. When the chucking switch actuates, the loading motor stops and the feed motor starts rotating counterclockwise to feed the pickup unit to the inner circumference, to perform the focus search. When the focus search is complete, the pickup unit returns to the initial position, and the open switch turns on to open the tray.

As you press OPEN/CLOSE after loading the disc, the loading motor rotates clockwise to actuate the chucking switch. When the tray closes,the chucking switch turns on and the pickup unit moves up.
The feed motor rotates clockwise to feed the pickup unit to the LD focus search position to perform the search. Then, the tilt motor rotates to perform the tilt adjustment. Finally, the spindle motor rotates to start playback.

Moving the Pickup Unit Up

- The tray closes.
- The loading motor rotates clockwise.
- The drive gear rotates via the belt and the intermediate pulley.
- The right and left guides move up.
- The disc motor chassis assembly (where the pickup unit is mounted) moves up along the cam grooves of the right and left guides.
- The chucking detector on the right guide operates to actuate the chucking switch.
- The loading motor stops.

Moving the Pickup Unit Down

- The loading motor rotates counterclockwise.
- The drive gear rotates via the belt and intermediate pulley.
- The right and left guides move down.
- The disc motor chassis assembly moves down along the cam grooves of the guides.
- The intermediate detector on the right guide operates to actuate the intermediate switch.
- The loading motor stops.
- Tilt Adjustment Operation
- The pickup unit moves to top position.
- The tilt sensor turns on.
- The tilt motor rotates.
- The tilt adapter moves up and down via the tilt gear and tilt screw shaft.
- The tilt spring operates to let the chassis assembly perform tilt adjustment operation.

Opening the Tray

- The pickup unit moves to the bottom position.
- The loading motor rotates counterclockwise.
- The drive gear rotates via the belt and the intermediate pulley.
- The change rack moves to the right along the cam groove of the right guide, until the drive gear engages with the tray rack.
- The tray opens.
- The open detector operates to turn on the open switch.
- The loading motor stops.

Closing the Tray

- The loading motor rotates clockwise.

- The drive gear rotates via the belt and intermediate pulley.
- The tray closes.
- The change rack moves to the left along the cam groove of the right guide, until the drive gear engages with the rack on the right guide.
- The right guide moves up.
- The intermediate detector on the right guide operates to turn off the intermediate switch.

DISASSEMBLY PROCEDURE OF CABINET

Top Cover Removal (Fig A)

1) Remove 6 screws (A) fixing the Top Cover.
2) Pivot the Top Cover at rear edge by pulling left and right edges outward, then slide the Top Cover upward.

Tray removal (Fig.B)

1) Remove the M3ST screw,and then remove the angle-T assembly.
2) Manually turn the drive gear clockwise to slightly open the tray.
3) Slightly move the tray in the open direction until the tray contacts the stoppers.
4) Press the tray stoppers and pull out the tray. Remove the tray from the mechanism.To reinstall the tray,move the change rack rightward, and then install the tray,move the change rack rightward,and then install the tray while taking care not to touch the open switch.

Front Panel Assembly Removal (Fig.C)

1) If not already removed, remove the Tray first.
2) Remove 3 screws (B) on top and 3 scews (C) on bottom fixing Front Panel Ass'y to chassis.

Main Chassis (Mechanism Ass'y) Removal (Fig. B)

1) If not already removed, remove Tray and Front Panel Ass'y.
2) Remove 4 screws (L-1) fixing Main Chassis (Mechanism Ass'y) to Chassis.

DISASSEMBLY PROCEDURE OF MECHANISM

Removal of disc motor chassis assembly (Fig. 1)

1) Remove the shoulder screws 3 and 9.
2) Manually turn the drive gear counterclockwise to move up the disc motor chassis assembly.
3) Remove the disc motor chassis assembly by pulling it up.

Removal of tilt chassis assembly (Fig. 1)

1) Remove the M3ST screw, and then remove the rotary sensor bracket assembly.
2) Remove the M3ST cup-head screw and tilt spring.
3) Slide the tilt chassis assembly toward the direction as shown with Arrow ① first, toward as shown with Arrow ②, then pull it upward.

rig. (A)

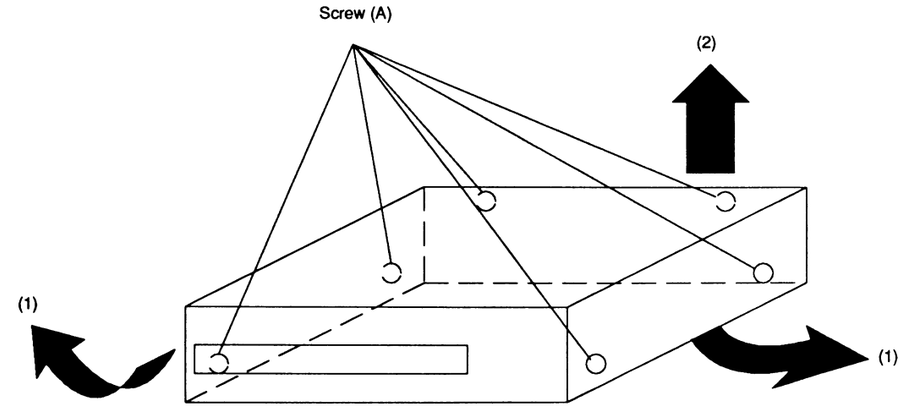

Fig. (B)

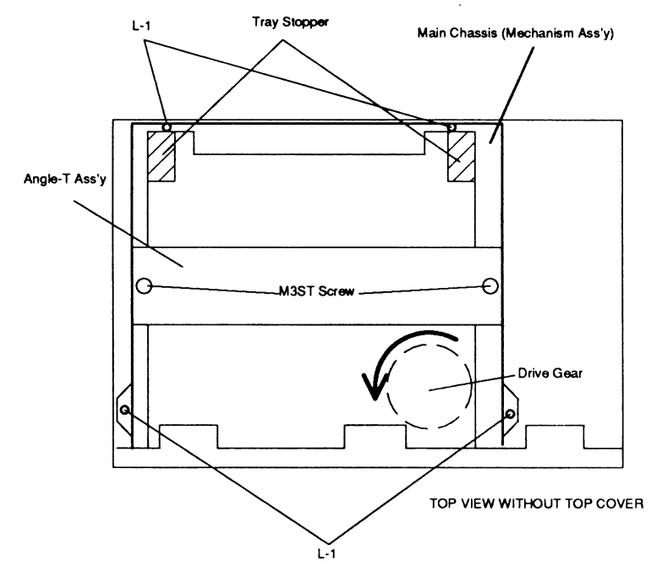

Fig. (C)

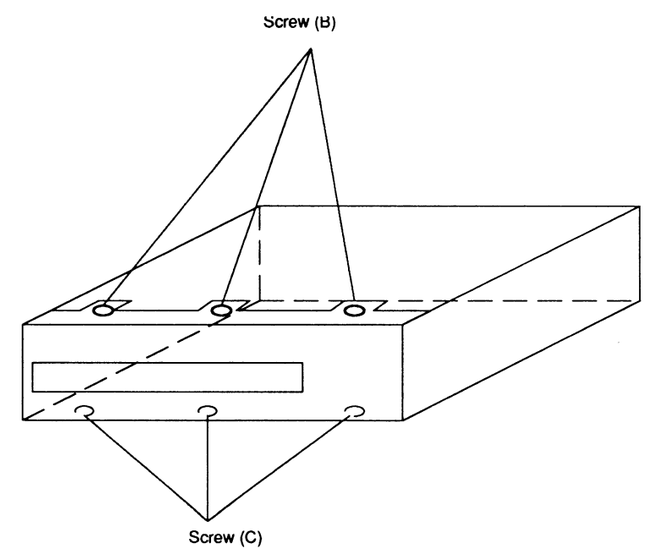

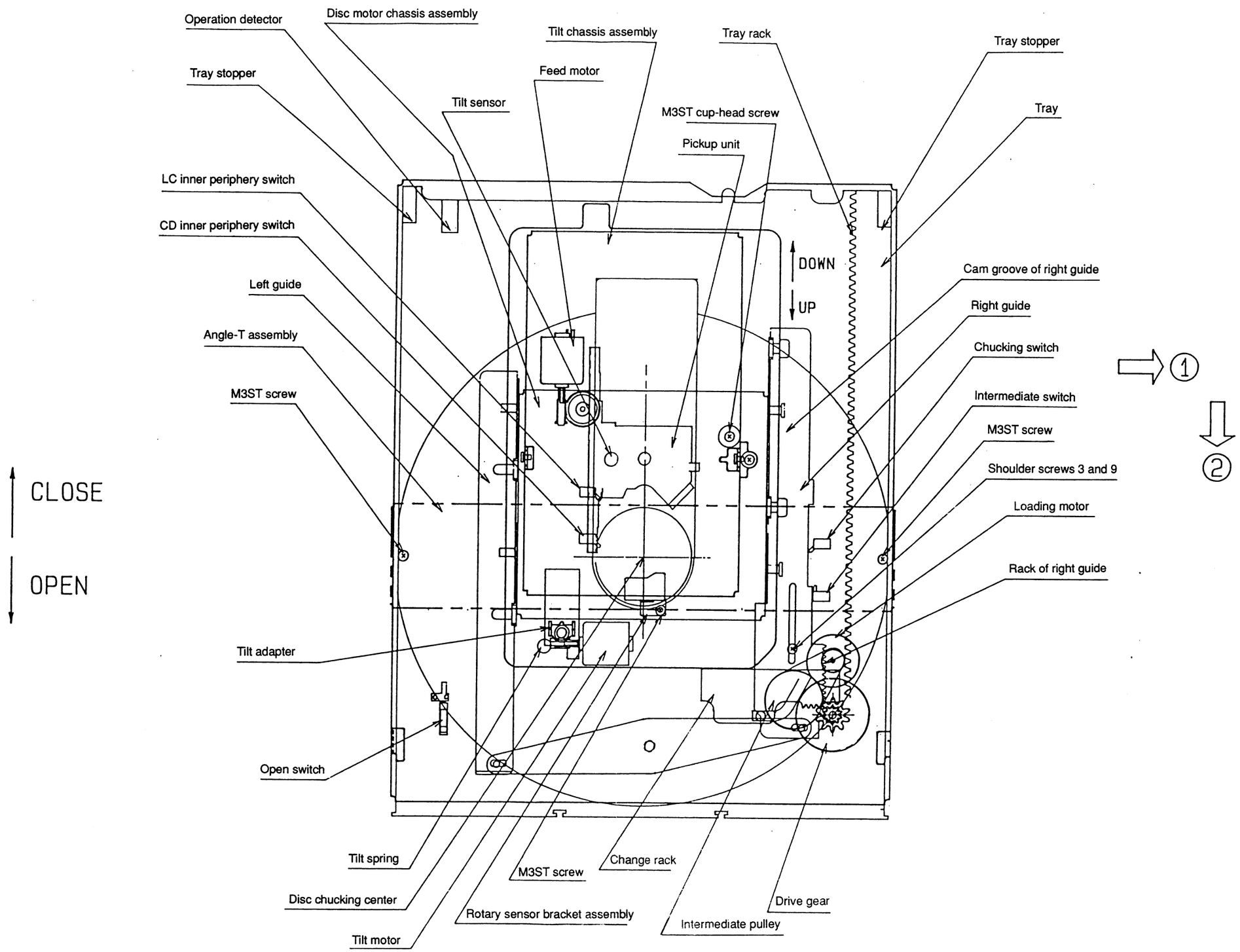
Operation detector
Disc motor chassis assembly
Tilt chassis assembly
Tray rack
Tray stopper
Tray stopper
Feed motor
Tilt sensor
M3ST cup-head screw
Tray
Pickup unit
LC inner periphery switch
CD inner periphery switch
DOWN
UP
Cam groove of right guide
Left guide
Right guide
Angle-T assembly
Chucking switch
M3ST screw
Intermediate switch
M3ST screw
Shoulder screws 3 and 9
CLOSE
Loading motor
OPEN
Rack of right guide
Tilt adapter
Open switch
Tilt spring
M3ST screw
Change rack
Disc chucking center
Rotary sensor bracket assembly
Drive gear
Intermediate pulley
Tilt motor

Fig. 1

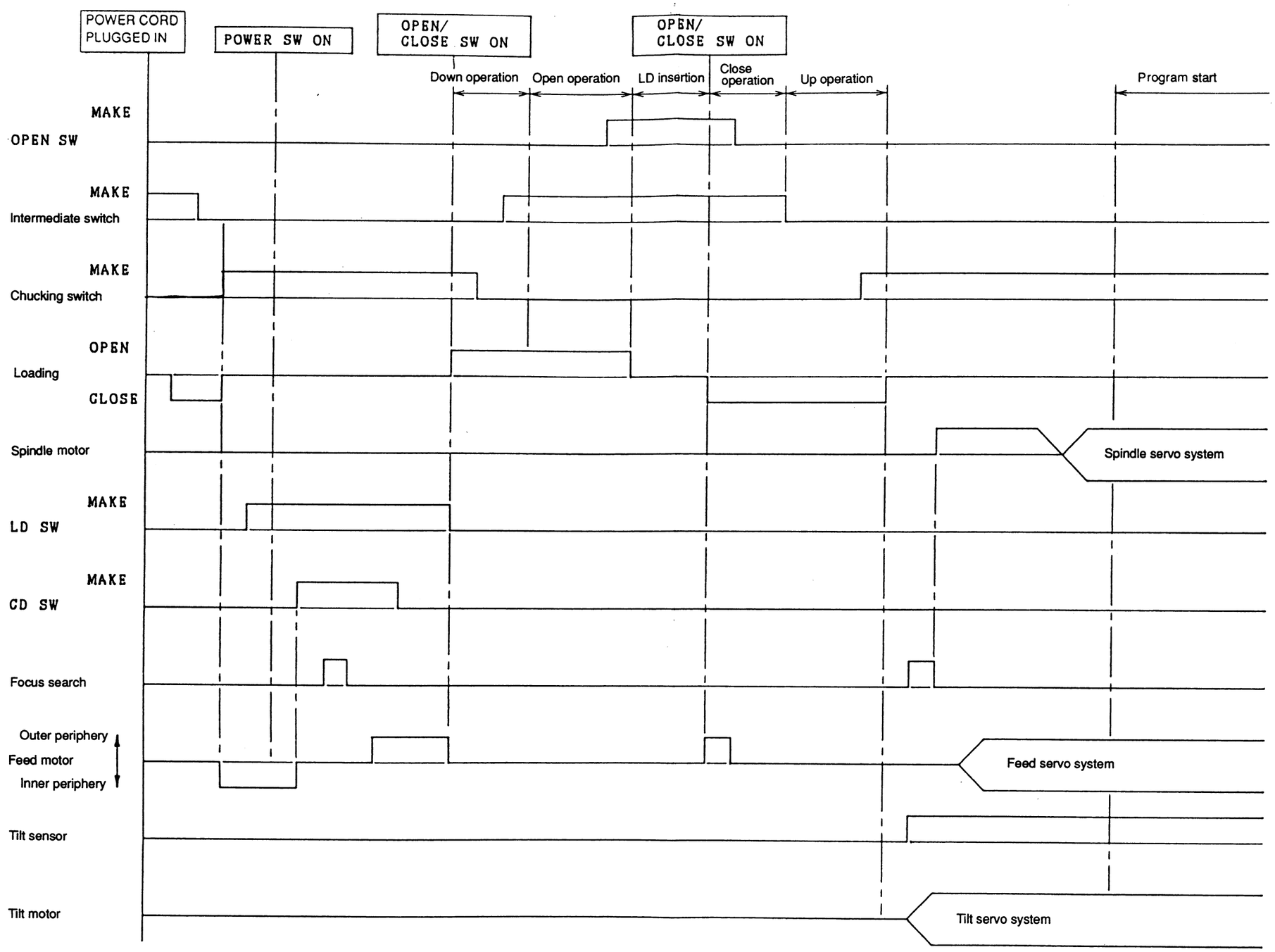
POWER CORD PLUGGED IN
POWER SW ON
OPEN/ CLOSE SW ON
OPEN/ CLOSE SW ON
Down operation
Open operation
LD insertion
Close operation
Up operation
Program start
MAKE
OPEN SW
MAKE
Intermediate switch
MAKE
Chucking switch
OPEN
Loading
CLOSE
Spindle motor
Spindle servo system
MAKE
LD SW
MAKE
CD SW
Focus search
Outer periphery
Feed motor
Inner periphery
Feed servo system
Tilt sensor
Tilt motor
Tilt servo system

Fig. 2

BLOCK DIAGRAM

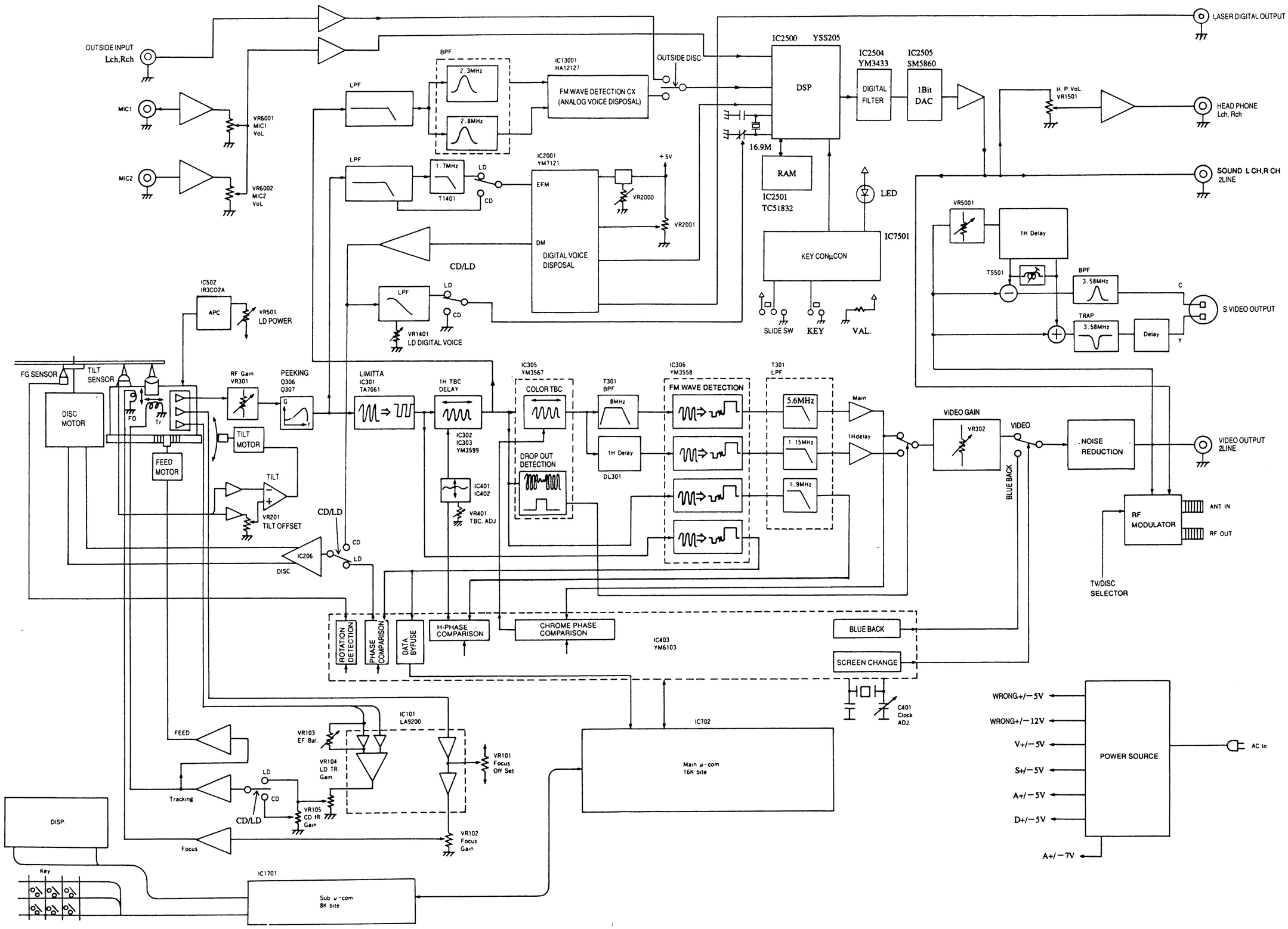

TROUBLESHOOTING

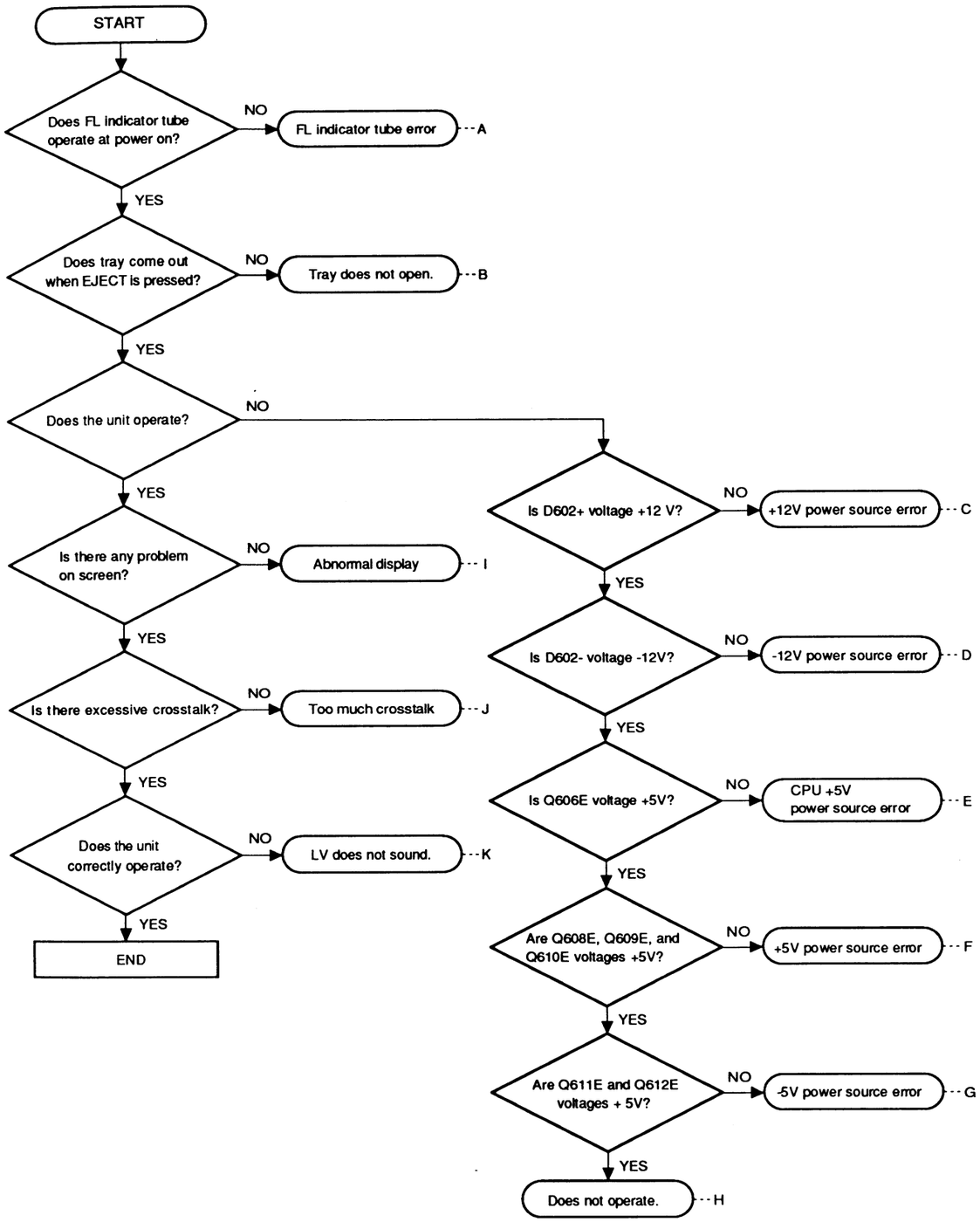

A.

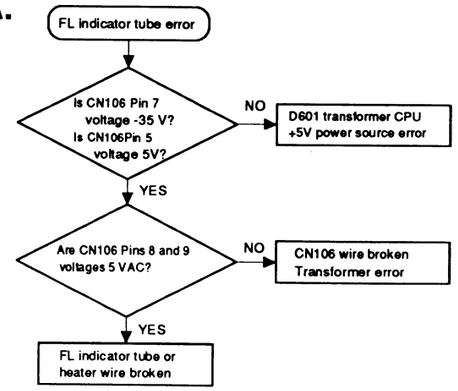

B.

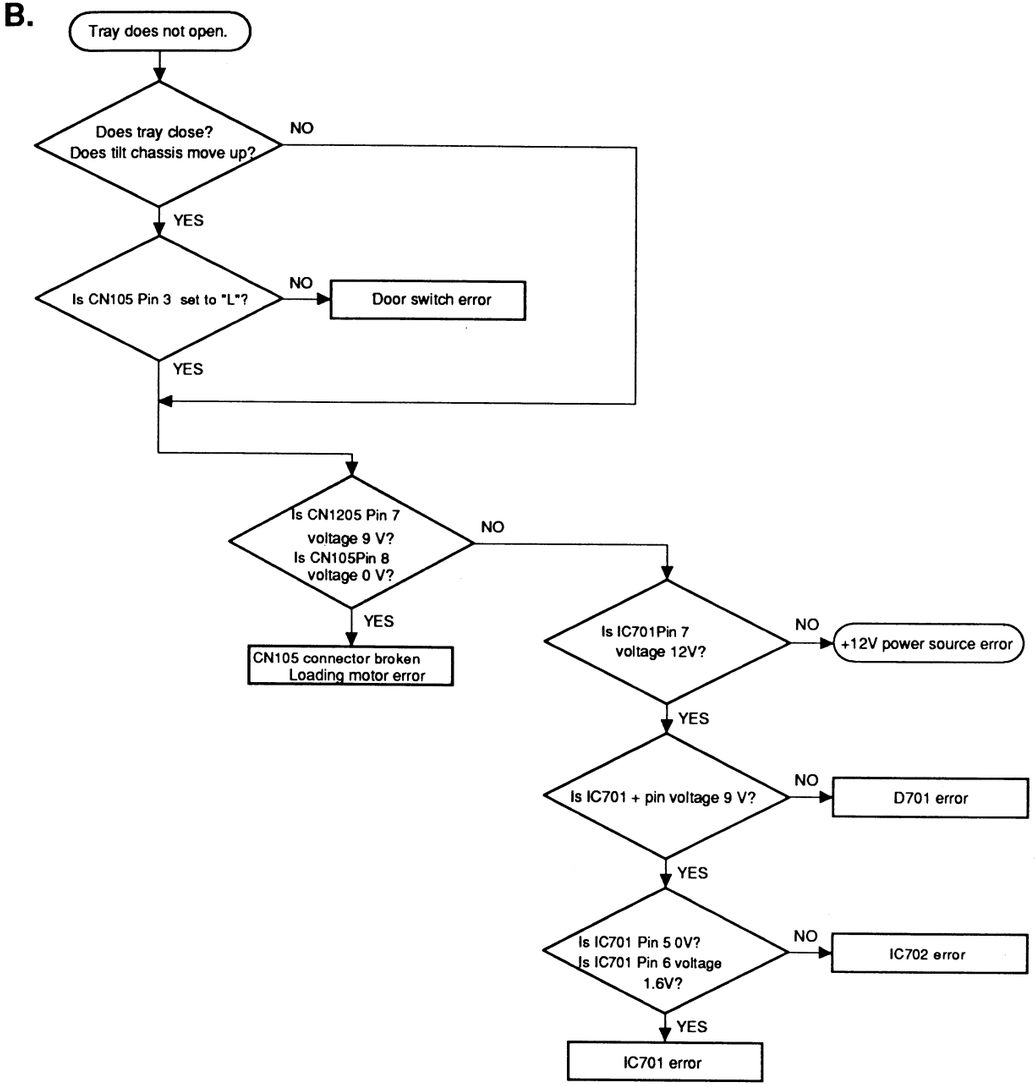

Note: Ten minutes after the tray open, the tray close to protect the loading device.

C.

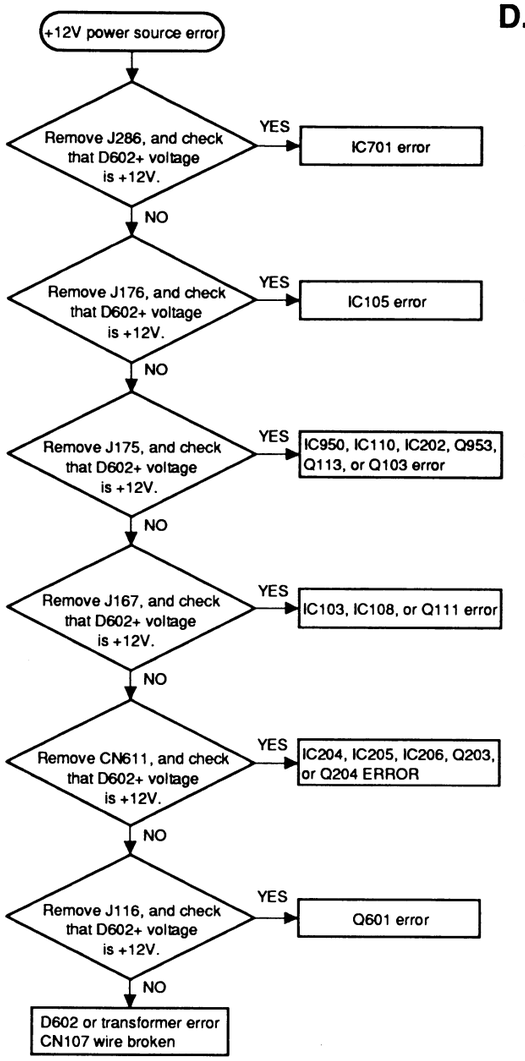
+12V power source error
Remove J286, and check that D602+ voltage is +12V.
YES
IC701 error
NO
Remove J176, and check that D602+ voltage is +12V.
YES
IC105 error
NO
Remove J175, and check that D602+ voltage is +12V.
YES
IC950, IC110, IC202, Q953, Q113, or Q103 error
NO
Remove J167, and check that D602+ voltage is +12V.
YES
IC103, IC108, or Q111 error
NO
Remove CN611, and check that D602+ voltage is +12V.
YES
IC204, IC205, IC206, Q203, or Q204 ERROR
NO
Remove J116, and check that D602+ voltage is +12V.
YES
Q601 error
NO
D602 or transformer error
CN107 wire broken

D.

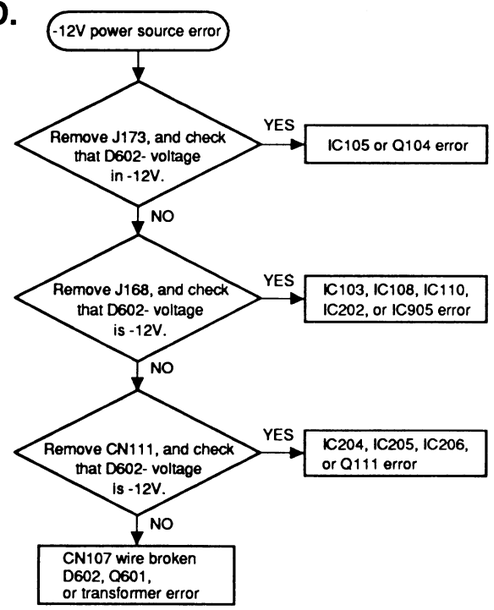
-12V power source error
Remove J173, and check that D602- voltage in -12V.
YES
IC105 or Q104 error
NO
Remove J168, and check that D602- voltage is -12V.
YES
IC103, IC108, IC110, IC202, or IC905 error
NO
Remove CN111, and check that D602- voltage is -12V.
YES
IC204, IC205, IC206, or Q111 error
NO
CN107 wire broken
D602, Q601,
or transformer error

E.

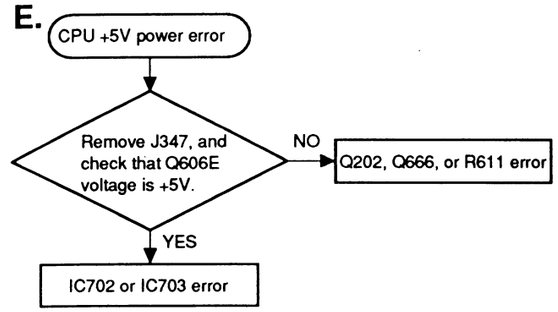
CPU +5V power error
Remove J347, and check that Q606E voltage is +5V.
NO
Q202, Q666, or R611 error
YES
IC702 or IC703 error

F.

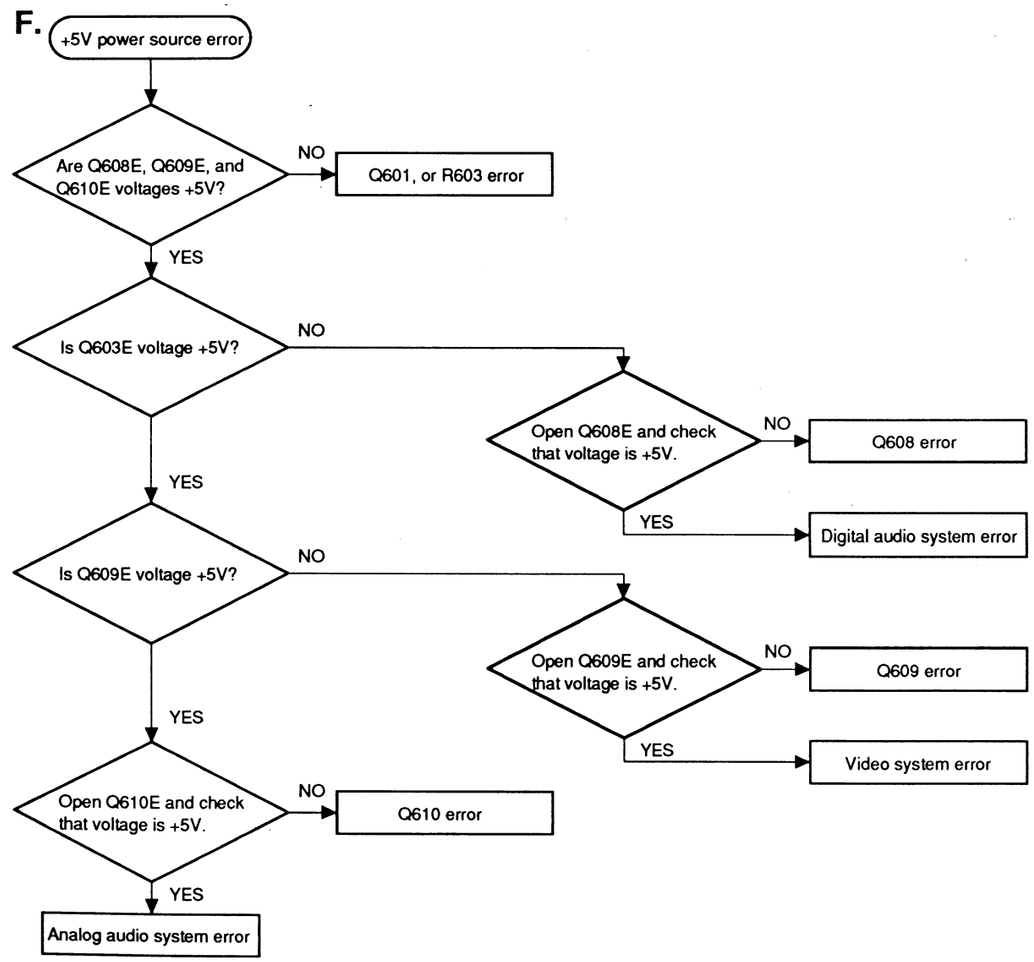
+5V power source error
Are Q608E, Q609E, and Q610E voltages +5V?
NO
Q601, or R603 error
YES
Is Q603E voltage +5V?
NO
Open Q608E and check that voltage is +5V.
NO
Q608 error
YES
Digital audio system error
YES
Is Q609E voltage +5V?
NO
Open Q609E and check that voltage is +5V.
NO
Q609 error
YES
Video system error
YES
Open Q610E and check that voltage is +5V.
NO
Q610 error
YES
Analog audio system error

G.

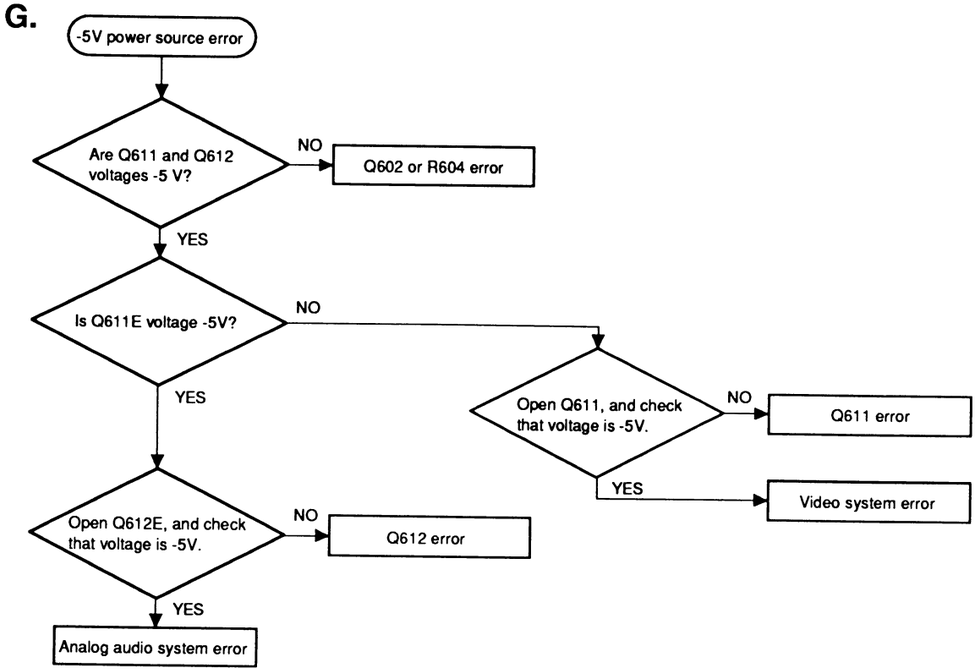
-5V power source error
Are Q611 and Q612 voltages -5 V?
NO
Q602 or R604 error
YES
Is Q611E voltage -5V?
NO
YES
Open Q611, and check that voltage is -5V.
NO
Q611 error
YES
Video system error
Open Q612E, and check that voltage is -5V.
NO
Q612 error
YES
Analog audio system error

H.

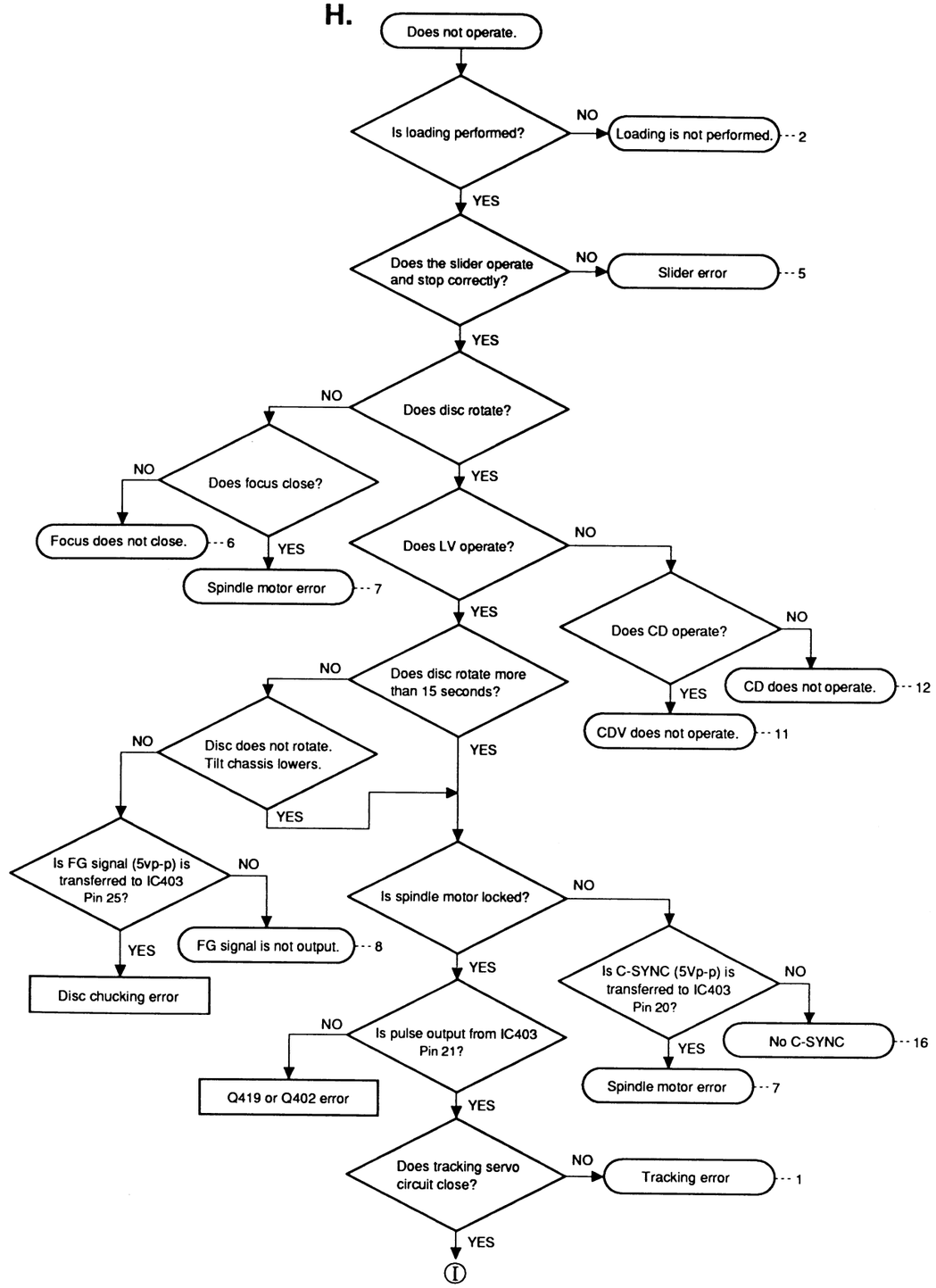
Does not operate.
Is loading performed?
NO
Loading is not performed. --- 2
YES
Does the slider operate and stop correctly?
NO
Slider error --- 5
YES
Does disc rotate?
NO
Does focus close?
NO
Focus does not close. --- 6
YES
Spindle motor error --- 7
YES
Does LV operate?
NO
Does CD operate?
NO
CD does not operate. --- 12
YES
CDV does not operate. --- 11
YES
Does disc rotate more than 15 seconds?
NO
Disc does not rotate. Tilt chassis lowers.
YES
YES
Is FG signal (5vp-p) is transferred to IC403 Pin 25?
NO
FG signal is not output. --- 8
YES
Disc chucking error
Is spindle motor locked?
NO
Is C-SYNC (5Vp-p) is transferred to IC403 Pin 20?
NO
No C-SYNC --- 16
YES
Spindle motor error --- 7
YES
Is pulse output from IC403 Pin 21?
NO
Q419 or Q402 error
YES
Does tracking servo circuit close?
NO
Tracking error --- 1
YES
I

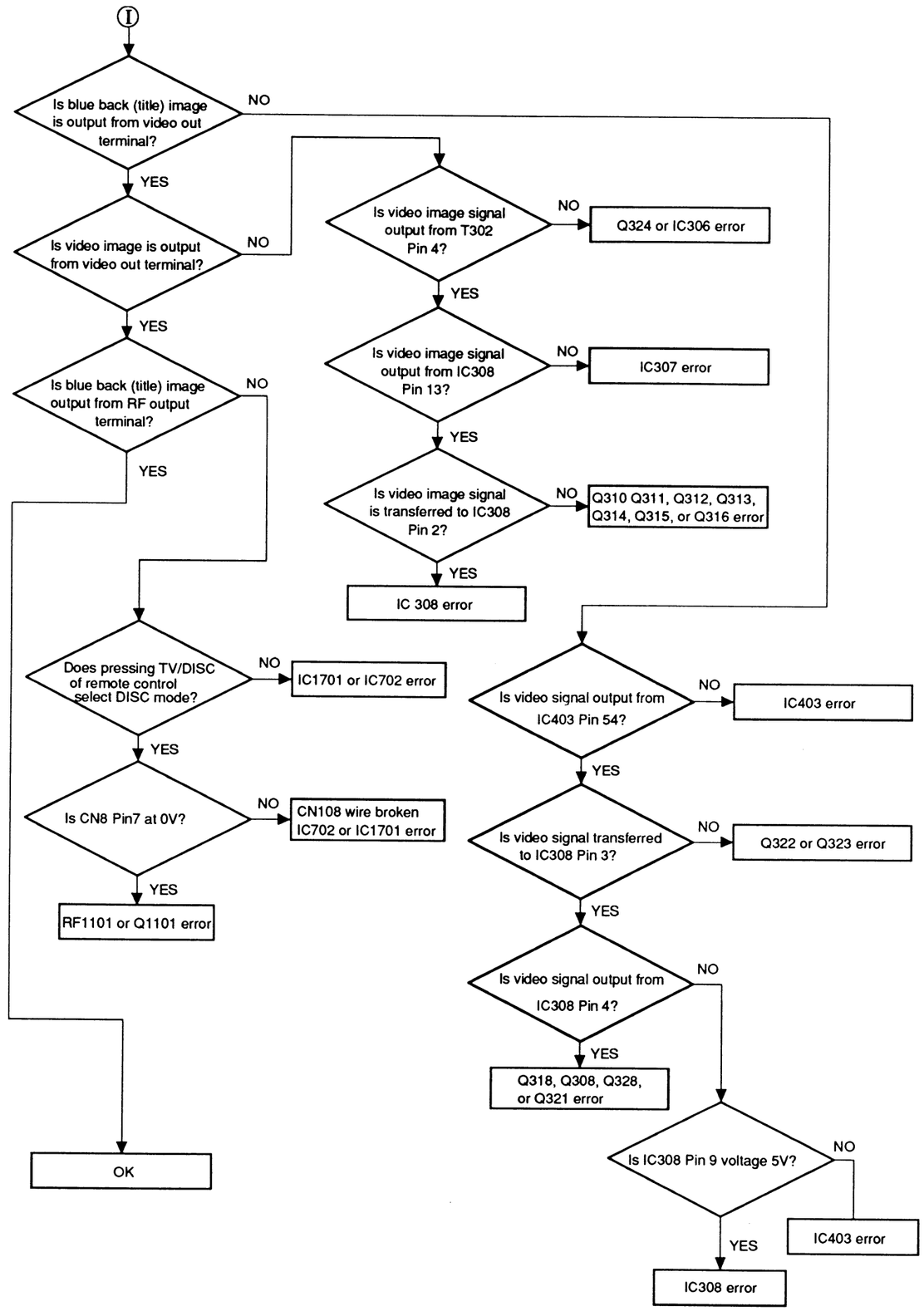
I
Is blue back (title) image is output from video out terminal?
NO
YES
Is video image is output from video out terminal?
NO
YES
Is blue back (title) image output from RF output terminal?
NO
YES
Does pressing TV/DISC of remote control select DISC mode?
NO
IC1701 or IC702 error
YES
Is CN8 Pin7 at 0V?
NO
CN108 wire broken IC702 or IC1701 error
YES
RF1101 or Q1101 error
OK
Is video image signal output from T302 Pin 4?
NO
Q324 or IC306 error
YES
Is video image signal output from IC308 Pin 13?
NO
IC307 error
YES
Is video image signal is transferred to IC308 Pin 2?
NO
Q310 Q311, Q312, Q313, Q314, Q315, or Q316 error
YES
IC 308 error
Is video signal output from IC403 Pin 54?
NO
IC403 error
YES
Is video signal transferred to IC308 Pin 3?
NO
Q322 or Q323 error
YES
Is video signal output from IC308 Pin 4?
NO
YES
Q318, Q308, Q328, or Q321 error
Is IC308 Pin 9 voltage 5V?
NO
IC403 error
YES
IC308 error

1.

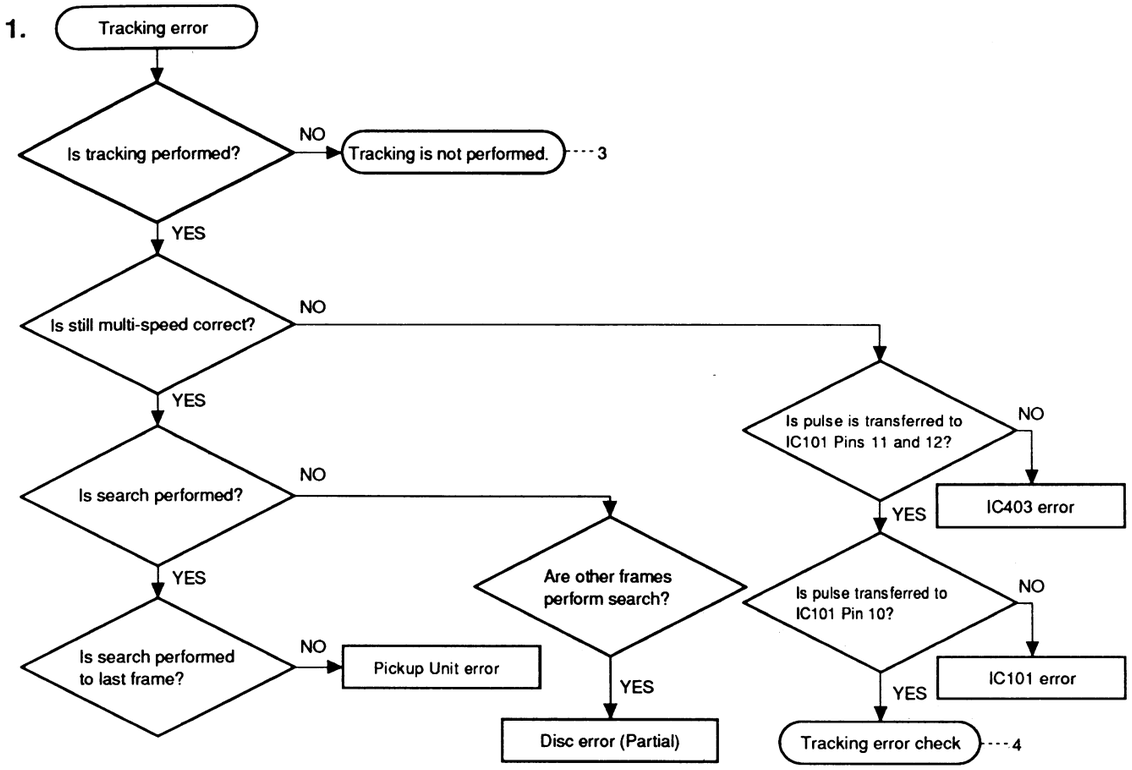
Tracking error
Is tracking performed?
NO
Tracking is not performed.
3
YES
Is still multi-speed correct?
NO
YES
Is search performed?
NO
YES
Is search performed to last frame?
NO
Pickup Unit error
Are other frames perform search?
YES
Disc error (Partial)
Is pulse is transferred to IC101 Pins 11 and 12?
NO
IC403 error
YES
Is pulse transferred to IC101 Pin 10?
NO
IC101 error
YES
Tracking error check
4

2.

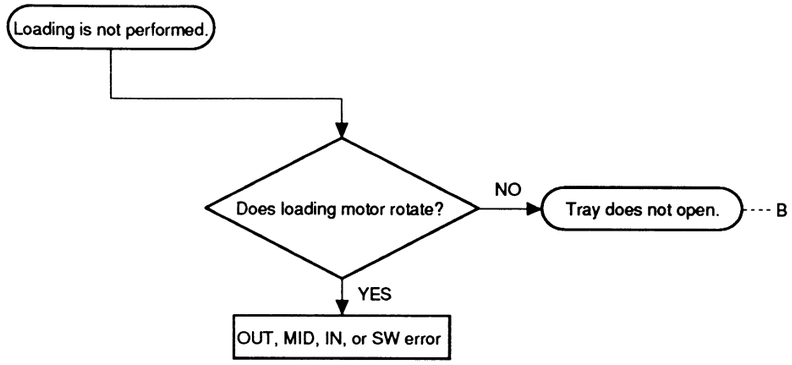
Loading is not performed.
Does loading motor rotate?
NO
Tray does not open.
B
YES
OUT, MID, IN, or SW error

3.

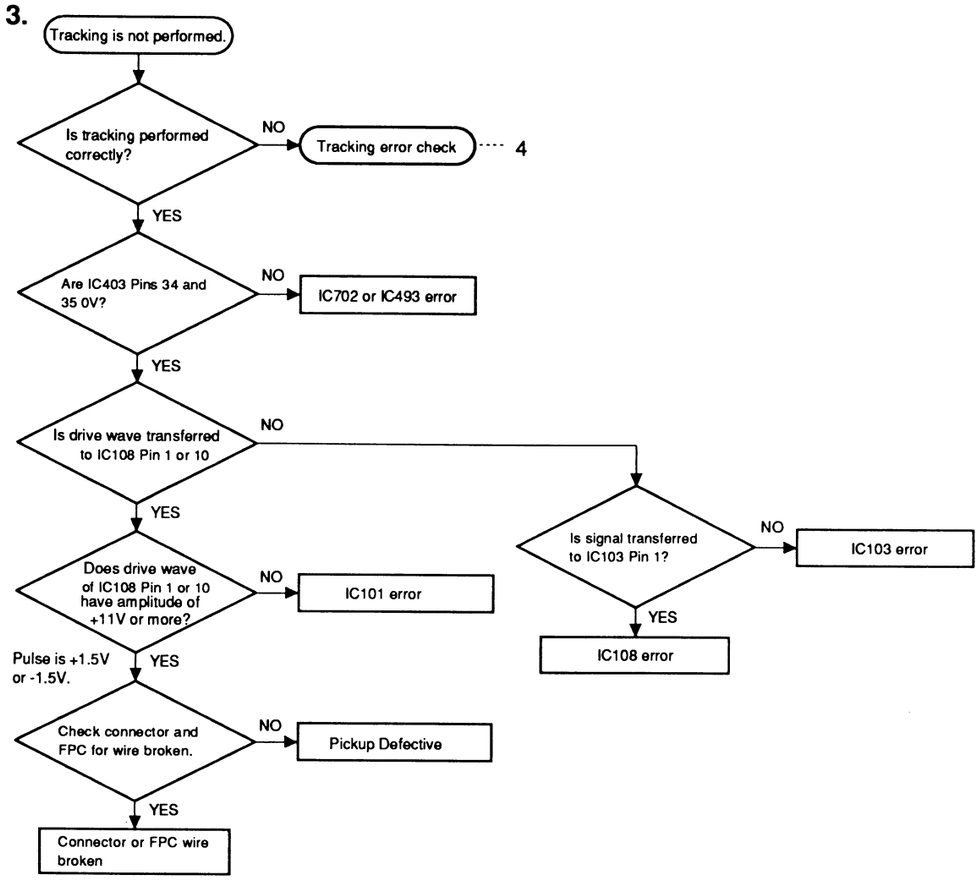
Tracking is not performed.
Is tracking performed correctly?
NO
Tracking error check
4
YES
Are IC403 Pins 34 and 35 0V?
NO
IC702 or IC493 error
YES
Is drive wave transferred to IC108 Pin 1 or 10
NO
YES
Does drive wave of IC108 Pin 1 or 10 have amplitude of +11V or more?
NO
IC101 error
Pulse is +1.5V or -1.5V.
YES
Check connector and FPC for wire broken.
NO
Pickup Defective
YES
Connector or FPC wire broken
Is signal transferred to IC103 Pin 1?
NO
IC103 error
YES
IC108 error

4.

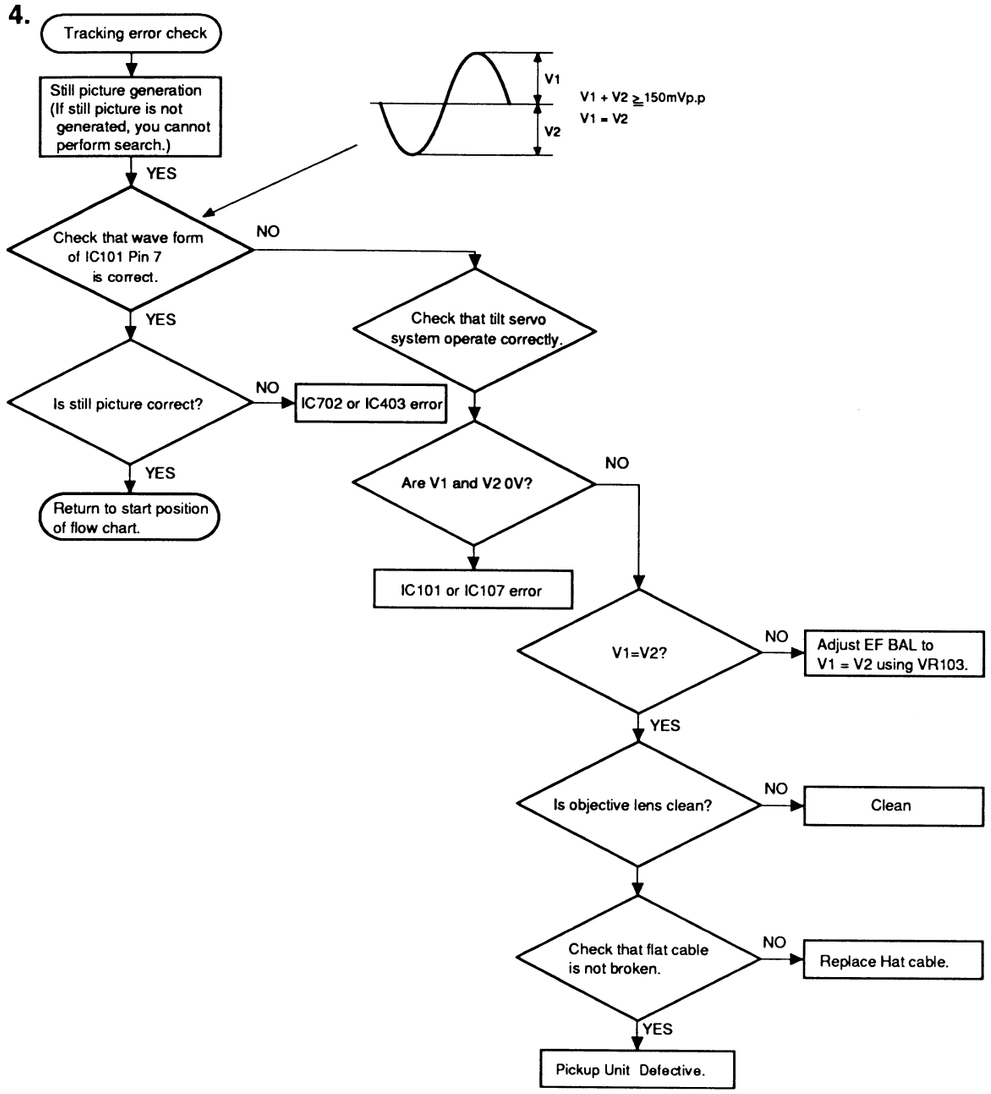
Tracking error check
Still picture generation (If still picture is not generated, you cannot perform search.)
YES
V1
V2
V1 + V2 ≧150mVp.p
V1 = V2
Check that wave form of IC101 Pin 7 is correct.
NO
YES
Check that tilt servo system operate correctly.
Is still picture correct?
NO
IC702 or IC403 error
YES
Return to start position of flow chart.
Are V1 and V2 0V?
NO
IC101 or IC107 error
V1=V2?
NO
Adjust EF BAL to V1 = V2 using VR103.
YES
Is objective lens clean?
NO
Clean
Check that flat cable is not broken.
NO
Replace Hat cable.
YES
Pickup Unit Defective.

5.

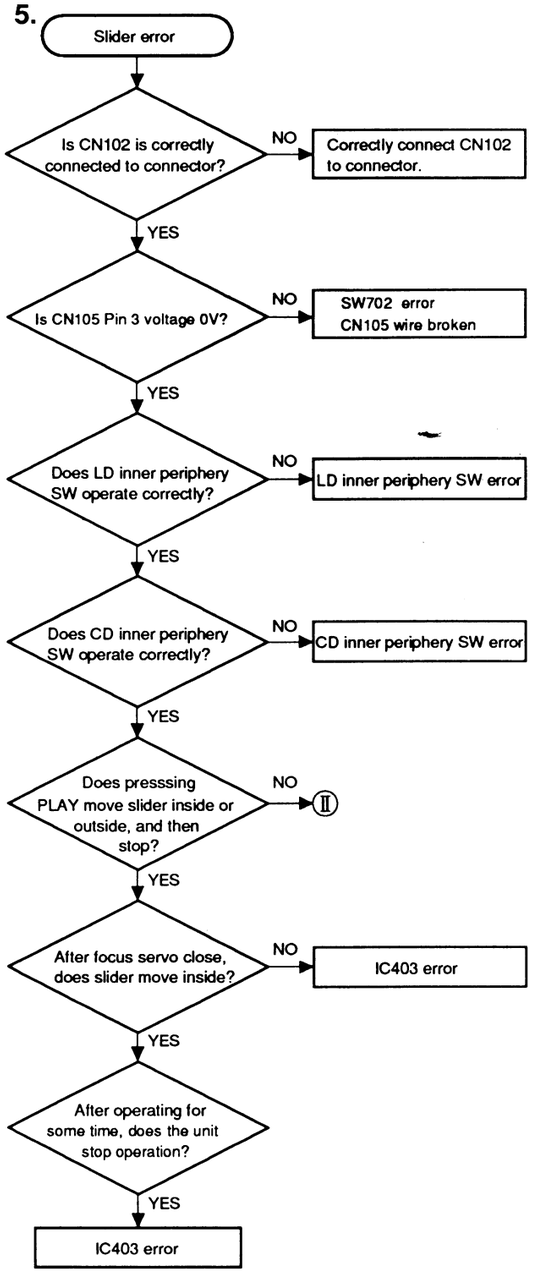
Slider error
Is CN102 is correctly connected to connector?
NO
Correctly connect CN102 to connector.
YES
Is CN105 Pin 3 voltage 0V?
NO
SW702 error
CN105 wire broken
YES
Does LD inner periphery SW operate correctly?
NO
LD inner periphery SW error
YES
Does CD inner periphery SW operate correctly?
NO
CD inner periphery SW error
YES
Does presssing PLAY move slider inside or outside, and then stop?
NO
Ⅱ
YES
After focus servo close, does slider move inside?
NO
IC403 error
YES
After operating for some time, does the unit stop operation?
YES
IC403 error

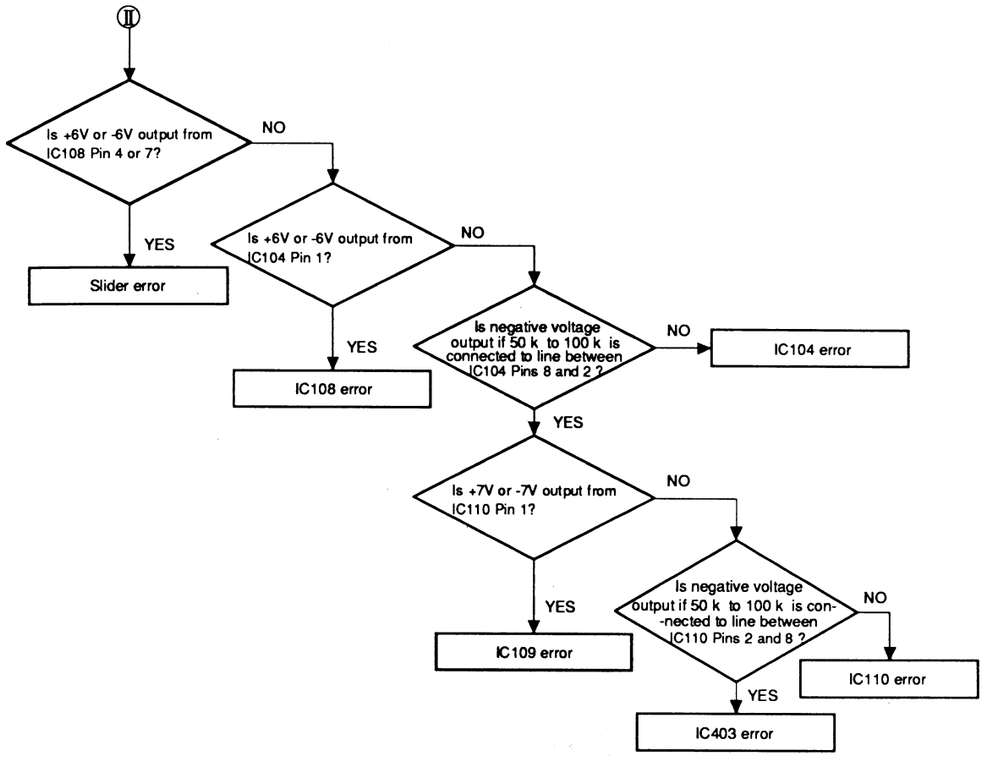
Ⅱ
Is +6V or -6V output from IC108 Pin 4 or 7?
NO
YES
Slider error
Is +6V or -6V output from IC104 Pin 1?
NO
YES
IC108 error
Is negative voltage output if 50 k to 100 k is connected to line between IC104 Pins 8 and 2 ?
NO
IC104 error
YES
Is +7V or -7V output from IC110 Pin 1?
NO
YES
IC109 error
Is negative voltage output if 50 k to 100 k is con--nected to line between IC110 Pins 2 and 8 ?
NO
IC110 error
YES
IC403 error

6.

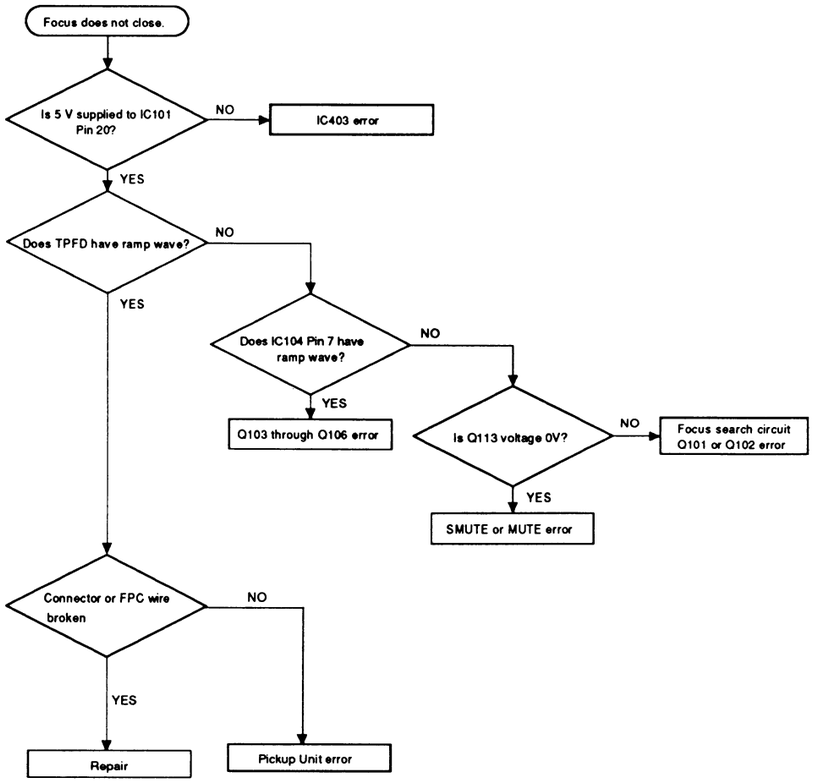
Focus does not close.
Is 5 V supplied to IC101 Pin 20?
NO
IC403 error
YES
Does TPFD have ramp wave?
NO
YES
Does IC104 Pin 7 have ramp wave?
NO
YES
Q103 through Q106 error
Is Q113 voltage 0V?
NO
Focus search circuit Q101 or Q102 error
YES
SMUTE or MUTE error
Connector or FPC wire broken
NO
YES
Repair
Pickup Unit error

7.

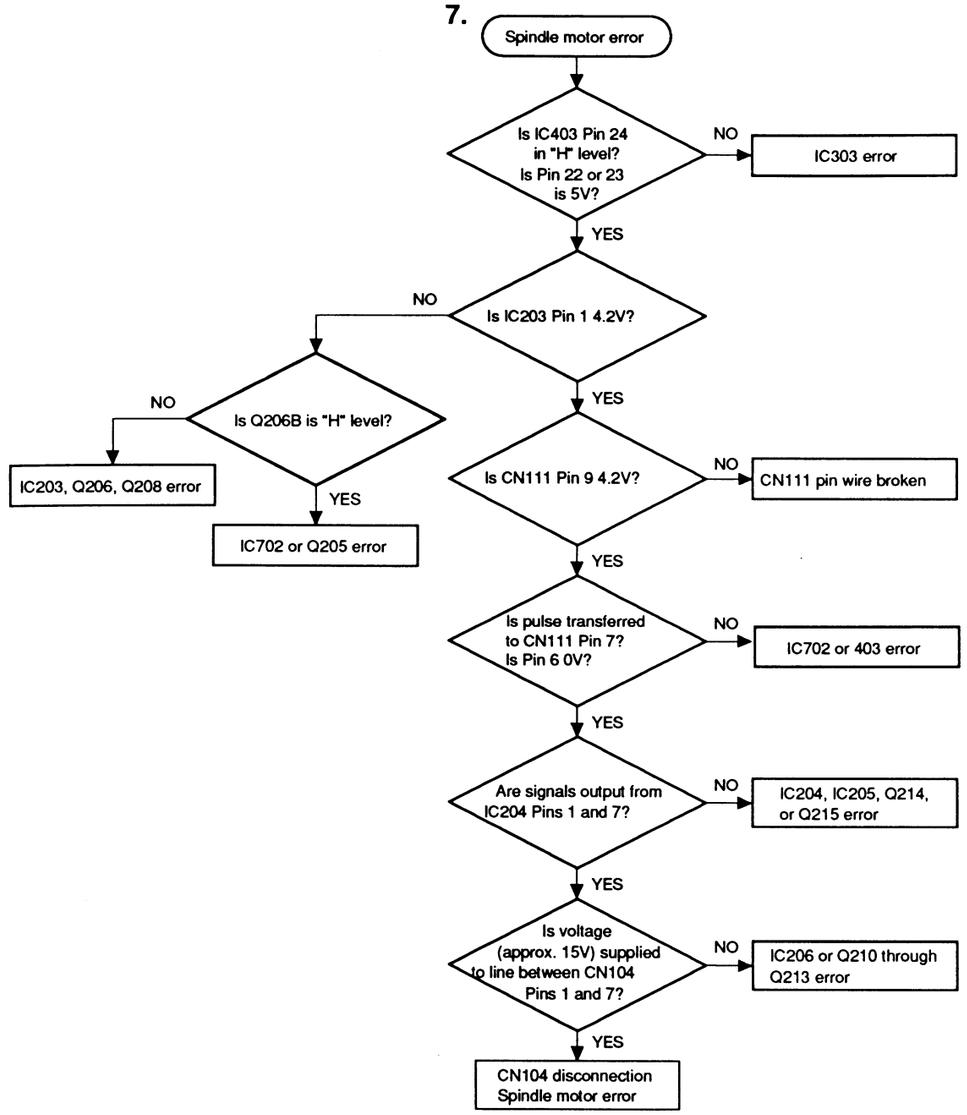
Spindle motor error
Is IC403 Pin 24 in "H" level? Is Pin 22 or 23 is 5V?
NO
IC303 error
YES
Is IC203 Pin 1 4.2V?
NO
Is Q206B is "H" level?
NO
IC203, Q206, Q208 error
YES
IC702 or Q205 error
YES
Is CN111 Pin 9 4.2V?
NO
CN111 pin wire broken
YES
Is pulse transferred to CN111 Pin 7? Is Pin 6 0V?
NO
IC702 or 403 error
YES
Are signals output from IC204 Pins 1 and 7?
NO
IC204, IC205, Q214, or Q215 error
YES
Is voltage (approx. 15V) supplied to line between CN104 Pins 1 and 7?
NO
IC206 or Q210 through Q213 error
YES
CN104 disconnection Spindle motor error

8.

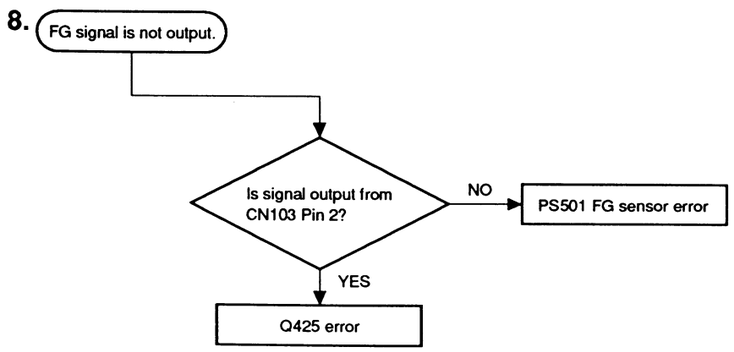
FG signal is not output.
Is signal output from CN103 Pin 2?
NO
PS501 FG sensor error
YES
Q425 error

9.

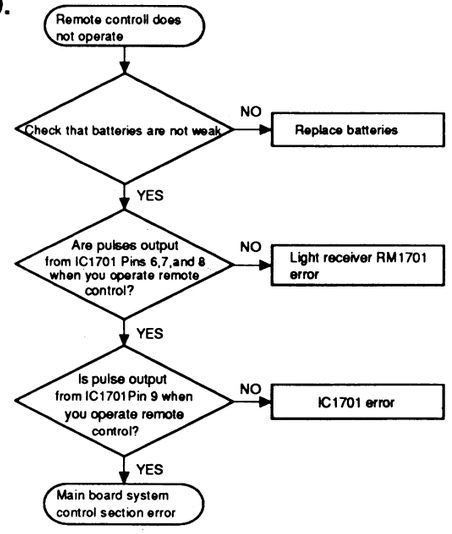
Remote controll does not operate
Check that batteries are not weak
NO
Replace batteries
YES
Are pulses output from IC1701 Pins 6,7,and 8 when you operate remote control?
NO
Light receiver RM1701 error
YES
Is pulse output from IC1701Pin 9 when you operate remote control?
NO
IC1701 error
YES
Main board system control section error

10.

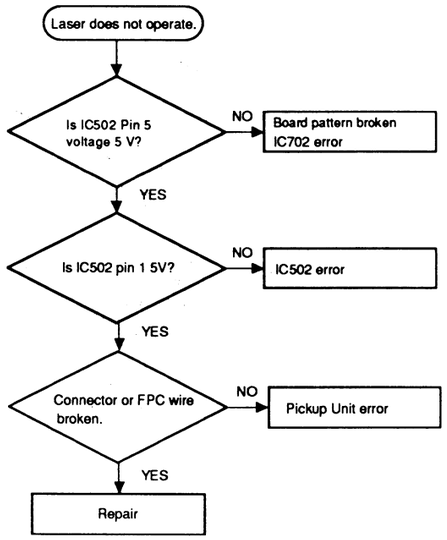
Laser does not operate.
Is IC502 Pin 5 voltage 5 V?
NO
Board pattern broken
IC702 error
YES
Is IC502 pin 1 5V?
NO
IC502 error
YES
Connector or FPC wire broken.
NO
Pickup Unit error
YES
Repair

11.

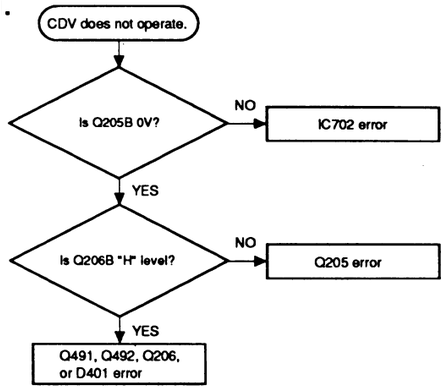
CDV does not operate.
Is Q205B 0V?
NO
IC702 error
YES
Is Q206B "H" level?
NO
Q205 error
YES
Q491, Q492, Q206, or D401 error

12.

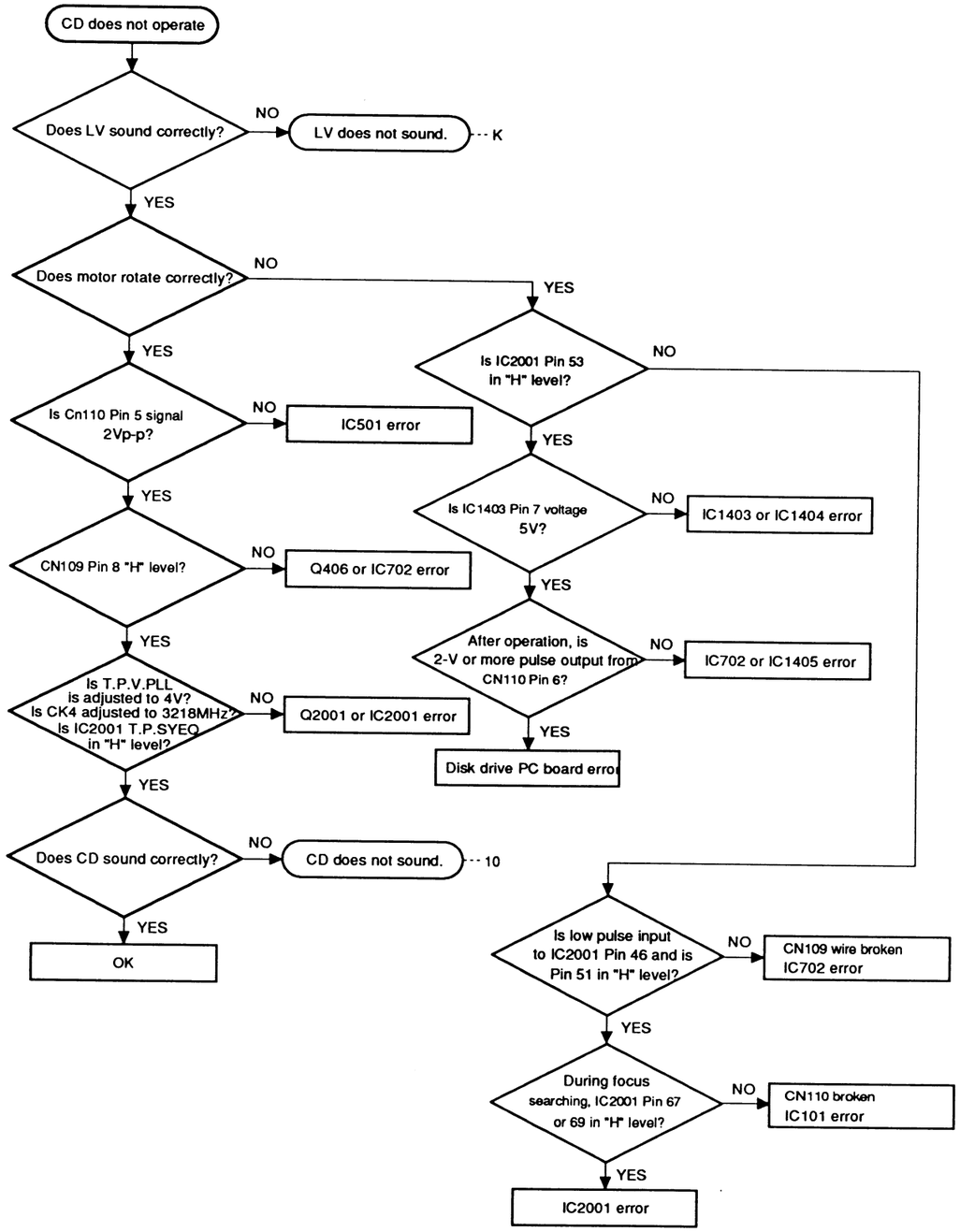
CD does not operate
Does LV sound correctly?
NO
LV does not sound.
--- K
YES
Does motor rotate correctly?
NO
YES
Is IC2001 Pin 53 in "H" level?
NO
YES
Is Cn110 Pin 5 signal 2Vp-p?
NO
IC501 error
YES
Is IC1403 Pin 7 voltage 5V?
NO
IC1403 or IC1404 error
YES
CN109 Pin 8 "H" level?
NO
Q406 or IC702 error
YES
After operation, is 2-V or more pulse output from CN110 Pin 6?
NO
IC702 or IC1405 error
YES
Is T.P.V.PLL is adjusted to 4V? Is CK4 adjusted to 3218MHz? Is IC2001 T.P.SYEQ in "H" level?
NO
Q2001 or IC2001 error
YES
Disk drive PC board error
YES
Does CD sound correctly?
NO
CD does not sound.
--- 10
YES
OK
Is low pulse input to IC2001 Pin 46 and is Pin 51 in "H" level?
NO
CN109 wire broken
IC702 error
YES
During focus searching, IC2001 Pin 67 or 69 in "H" level?
NO
CN110 broken
IC101 error
YES
IC2001 error

13.

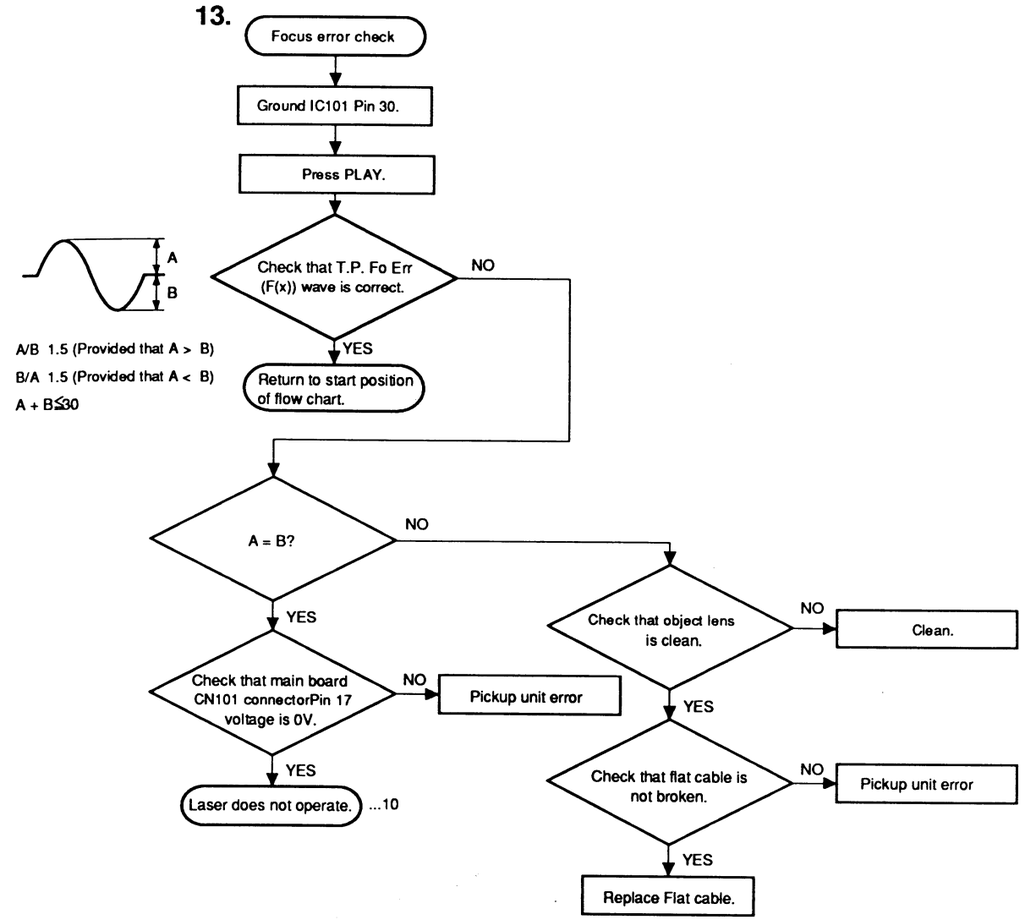
Focus error check
Ground IC101 Pin 30.
Press PLAY.
A
B
A/B 1.5 (Provided that A > B)
B/A 1.5 (Provided that A < B)
A + B≦30
Check that T.P. Fo Err (F(x)) wave is correct.
NO
YES
Return to start position of flow chart.
A = B?
NO
YES
Check that main board CN101 connectorPin 17 voltage is 0V.
NO
Pickup unit error
YES
Laser does not operate.
...10
Check that object lens is clean.
NO
Clean.
YES
Check that flat cable is not broken.
NO
Pickup unit error
YES
Replace Flat cable.

14.

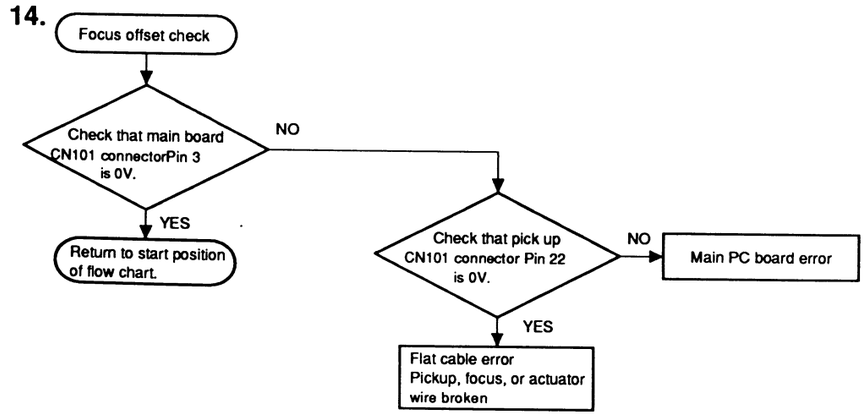
Focus offset check
Check that main board CN101 connectorPin 3 is 0V.
NO
YES
Return to start position of flow chart.
Check that pick up CN101 connector Pin 22 is 0V.
NO
Main PC board error
YES
Flat cable error
Pickup, focus, or actuator wire broken

15.

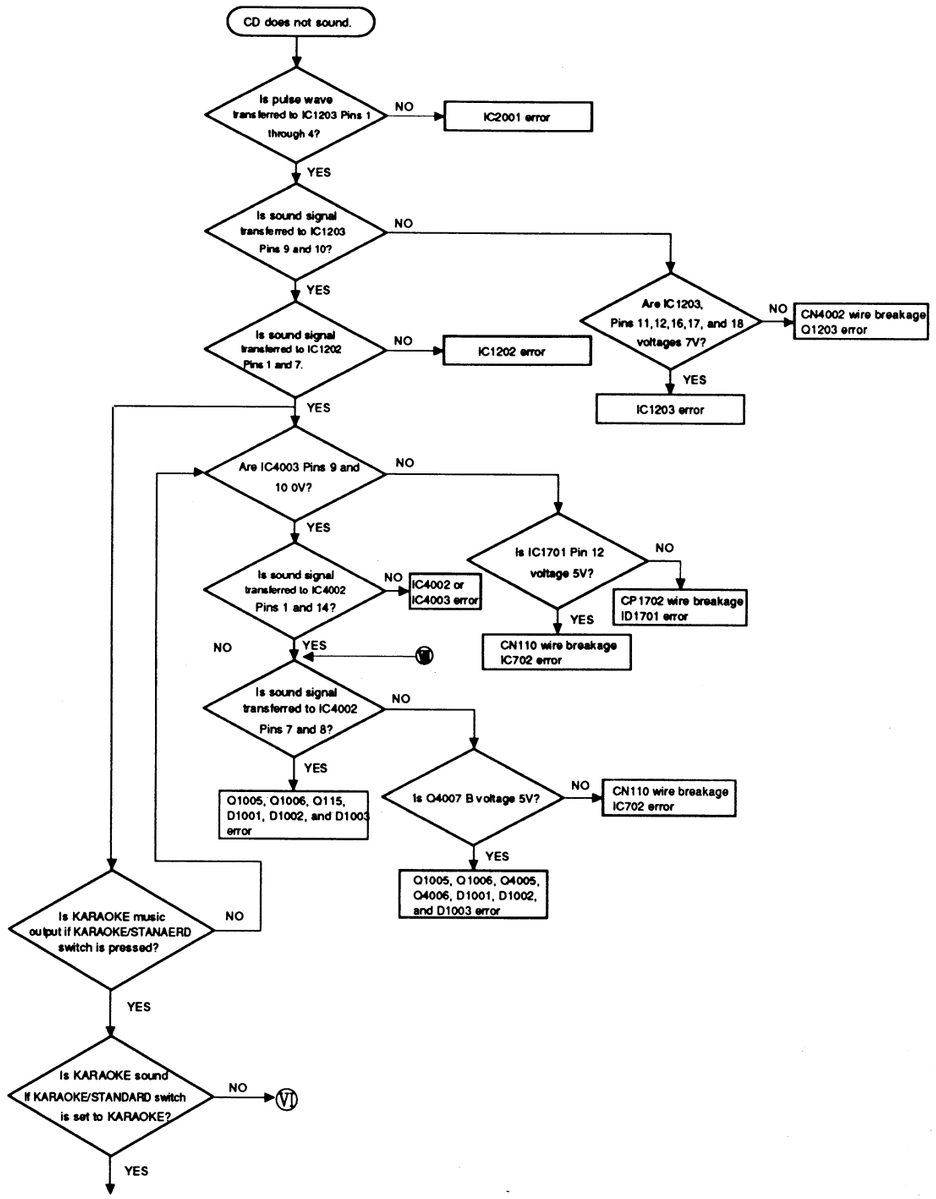
CD does not sound.
Is pulse wave transferred to IC1203 Pins 1 through 4?
NO
IC2001 error
YES
Is sound signal transferred to IC1203 Pins 9 and 10?
NO
YES
Are IC1203, Pins 11,12,16,17, and 18 voltages 7V?
NO
CN4002 wire breakage Q1203 error
YES
IC1203 error
Is sound signal transferred to IC1202 Pins 1 and 7.
NO
IC1202 error
YES
Are IC4003 Pins 9 and 10 0V?
NO
YES
Is IC1701 Pin 12 voltage 5V?
NO
CP1702 wire breakage ID1701 error
YES
CN110 wire breakage IC702 error
Is sound signal transferred to IC4002 Pins 1 and 14?
NO
IC4002 or IC4003 error
YES
NO
Is sound signal transferred to IC4002 Pins 7 and 8?
NO
YES
Q1005, Q1006, Q115, D1001, D1002, and D1003 error
Is Q4007 B voltage 5V?
NO
CN110 wire breakage IC702 error
YES
Q1005, Q1006, Q4005, Q4006, D1001, D1002, and D1003 error
Is KARAOKE music output if KARAOKE/STANAERD switch is pressed?
NO
YES
Is KARAOKE sound If KARAOKE/STANDARD switch is set to KARAOKE?
NO
VI
YES

16.

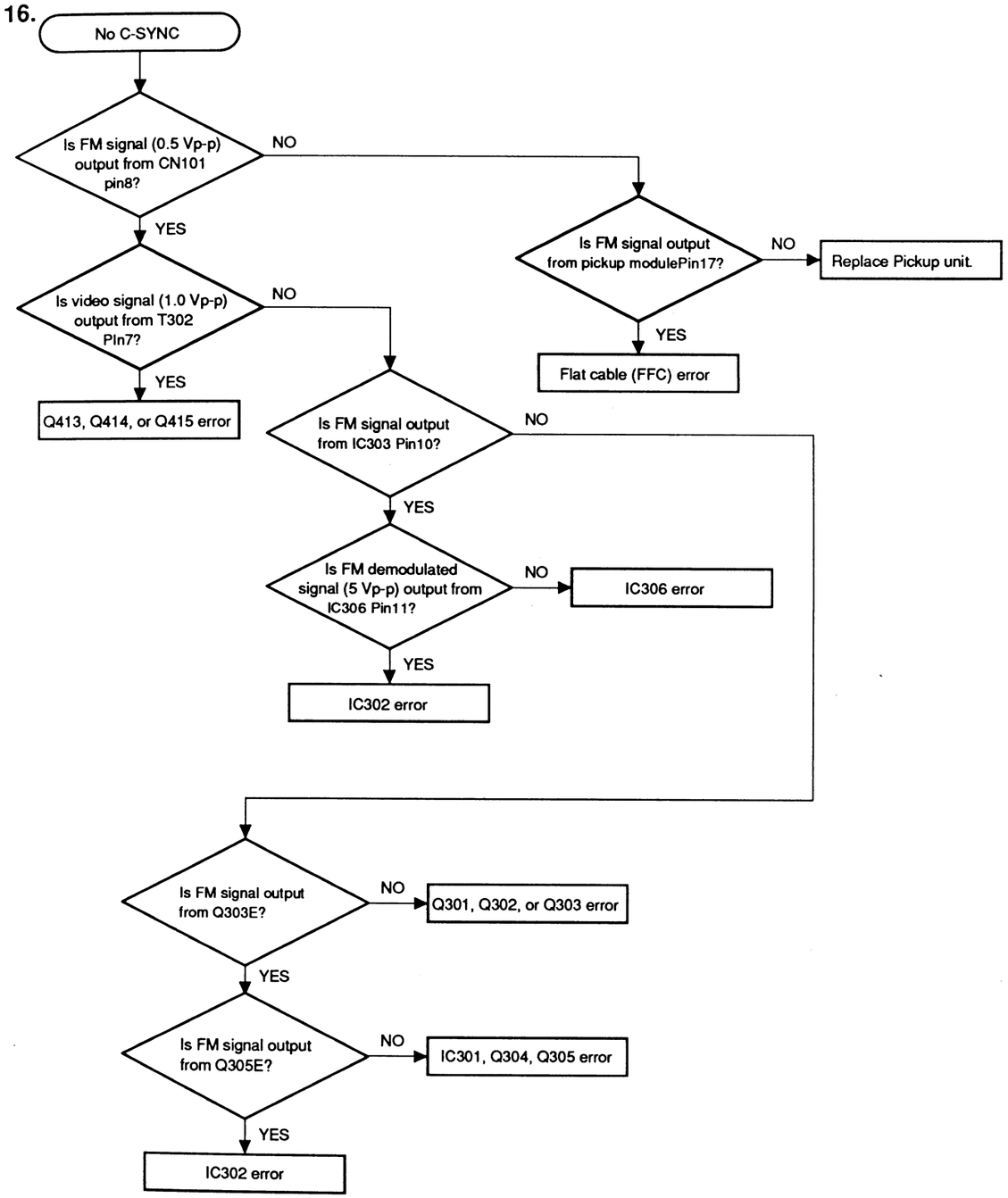
No C-SYNC
Is FM signal (0.5 Vp-p) output from CN101 pin8?
NO
YES
Is FM signal output from pickup modulePin17?
NO
Replace Pickup unit.
YES
Flat cable (FFC) error
Is video signal (1.0 Vp-p) output from T302 PIn7?
NO
YES
Q413, Q414, or Q415 error
Is FM signal output from IC303 Pin10?
NO
YES
Is FM demodulated signal (5 Vp-p) output from IC306 Pin11?
NO
IC306 error
YES
IC302 error
Is FM signal output from Q303E?
NO
Q301, Q302, or Q303 error
YES
Is FM signal output from Q305E?
NO
IC301, Q304, Q305 error
YES
IC302 error

I.

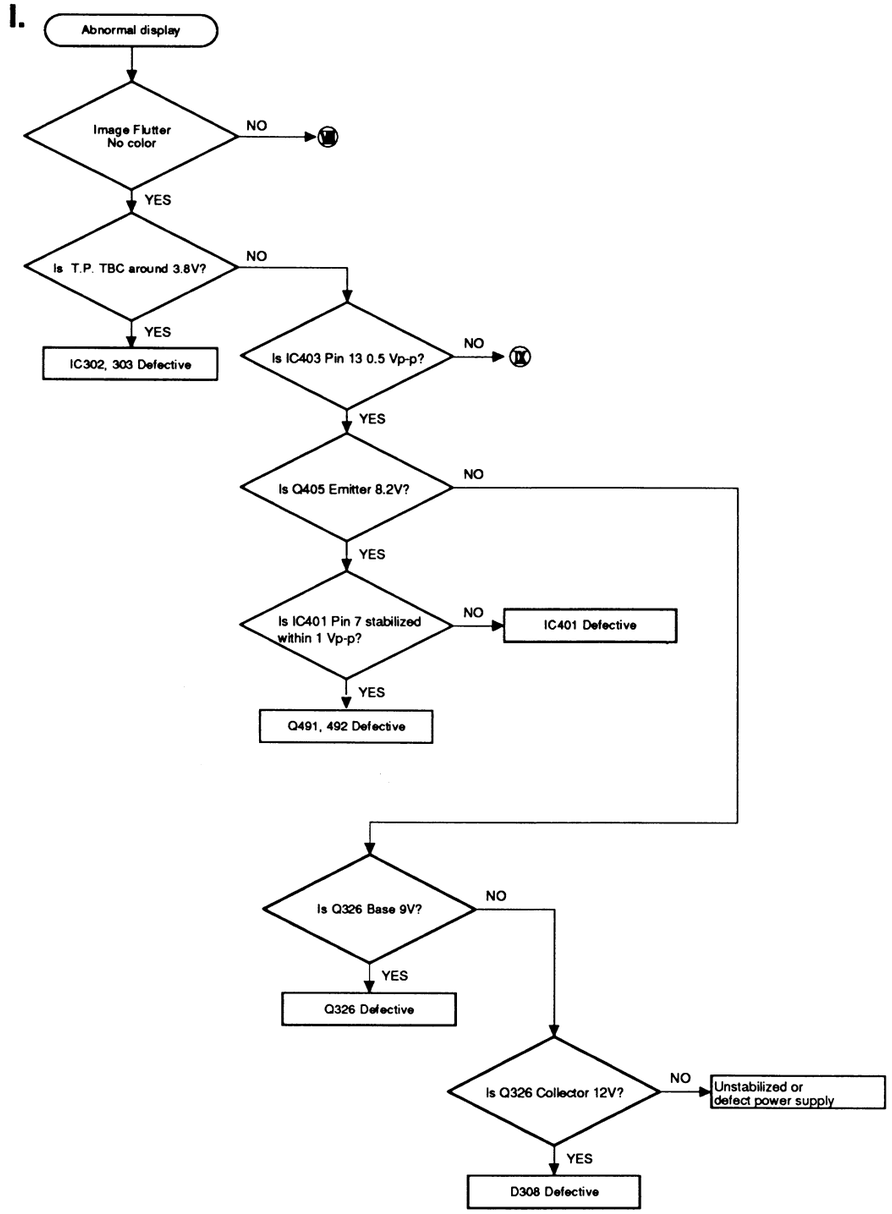
Abnormal display
Image Flutter No color
NO
VI
YES
Is T.P. TBC around 3.8V?
NO
YES
IC302, 303 Defective
Is IC403 Pin 13 0.5 Vp-p?
NO
IX
YES
Is Q405 Emitter 8.2V?
NO
YES
Is IC401 Pin 7 stabilized within 1 Vp-p?
NO
IC401 Defective
YES
Q491, 492 Defective
Is Q326 Base 9V?
NO
YES
Q326 Defective
Is Q326 Collector 12V?
NO
Unstabilized or defect power supply
YES
D308 Defective

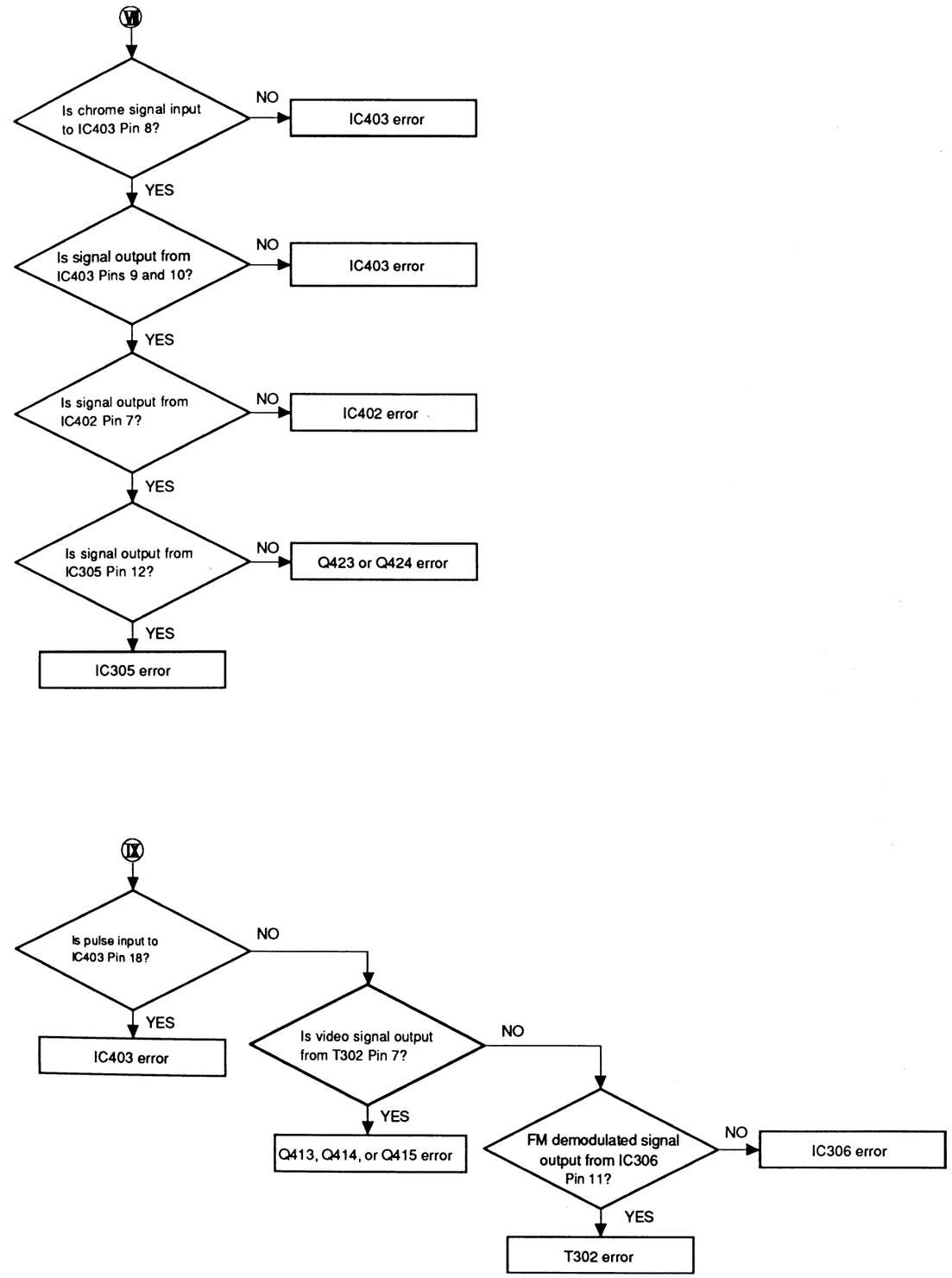
VI
Is chrome signal input to IC403 Pin 8?
NO
IC403 error
YES
Is signal output from IC403 Pins 9 and 10?
NO
IC403 error
YES
Is signal output from IC402 Pin 7?
NO
IC402 error
YES
Is signal output from IC305 Pin 12?
NO
Q423 or Q424 error
YES
IC305 error
IX
Is pulse input to IC403 Pin 18?
NO
YES
IC403 error
Is video signal output from T302 Pin 7?
NO
YES
Q413, Q414, or Q415 error
FM demodulated signal output from IC306 Pin 11?
NO
IC306 error
YES
T302 error

J.

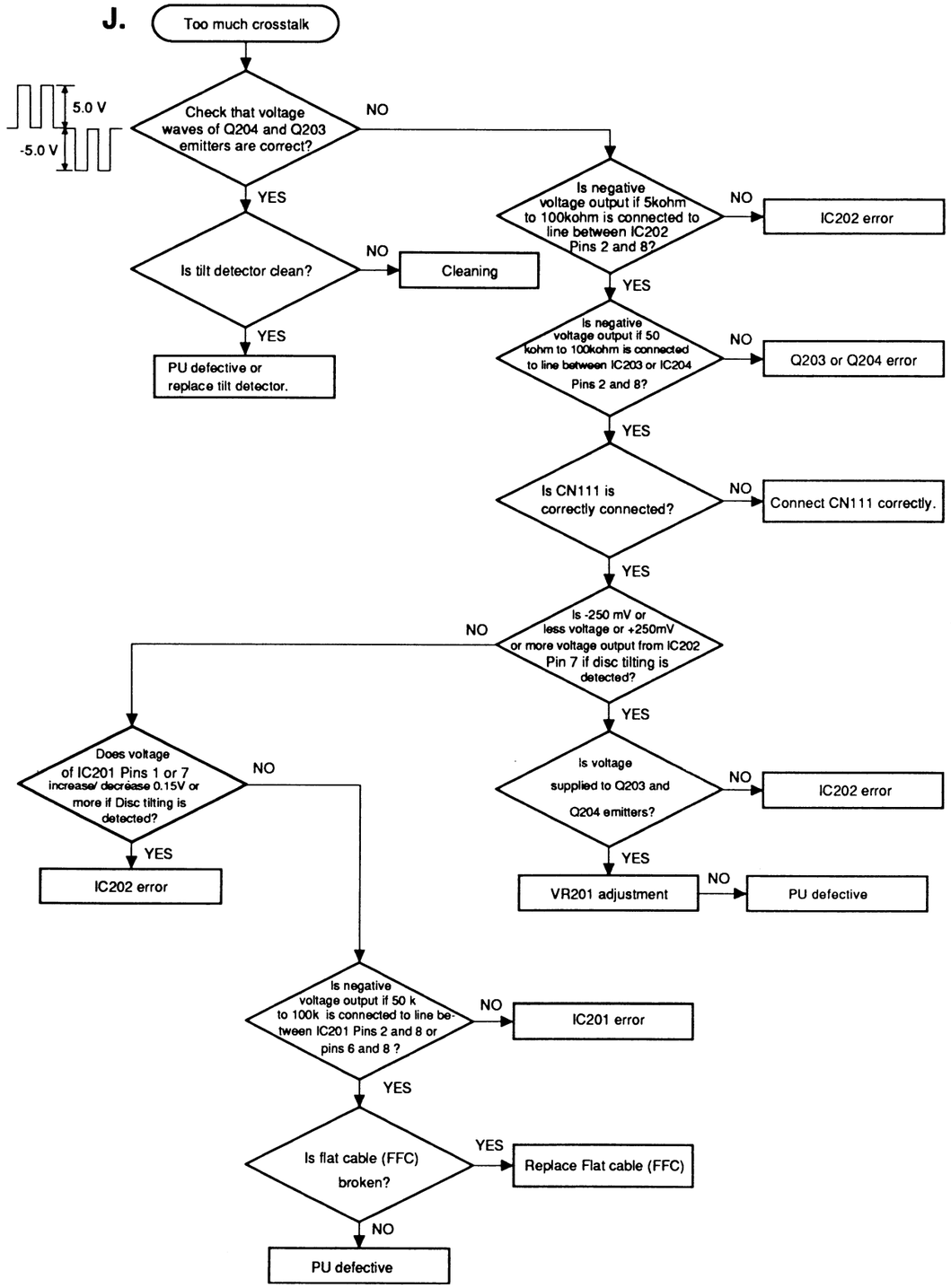
Too much crosstalk
5.0 V
-5.0 V
Check that voltage waves of Q204 and Q203 emitters are correct?
NO
YES
Is tilt detector clean?
NO
Cleaning
YES
PU defective or replace tilt detector.
Is negative voltage output if 5kohm to 100kohm is connected to line between IC202 Pins 2 and 8?
NO
IC202 error
YES
Is negative voltage output if 50 kohm to 100kohm is connected to line between IC203 or IC204 Pins 2 and 8?
NO
Q203 or Q204 error
YES
Is CN111 is correctly connected?
NO
Connect CN111 correctly.
YES
Is -250 mV or less voltage or +250mV or more voltage output from IC202 Pin 7 if disc tilting is detected?
NO
YES
Is voltage supplied to Q203 and Q204 emitters?
NO
IC202 error
YES
VR201 adjustment
NO
PU defective
Does voltage of IC201 Pins 1 or 7 increase/ decrease 0.15V or more if Disc tilting is detected?
NO
YES
IC202 error
Is negative voltage output if 50 k to 100k is connected to line between IC201 Pins 2 and 8 or pins 6 and 8 ?
NO
IC201 error
YES
Is flat cable (FFC) broken?
YES
Replace Flat cable (FFC)
NO
PU defective

K

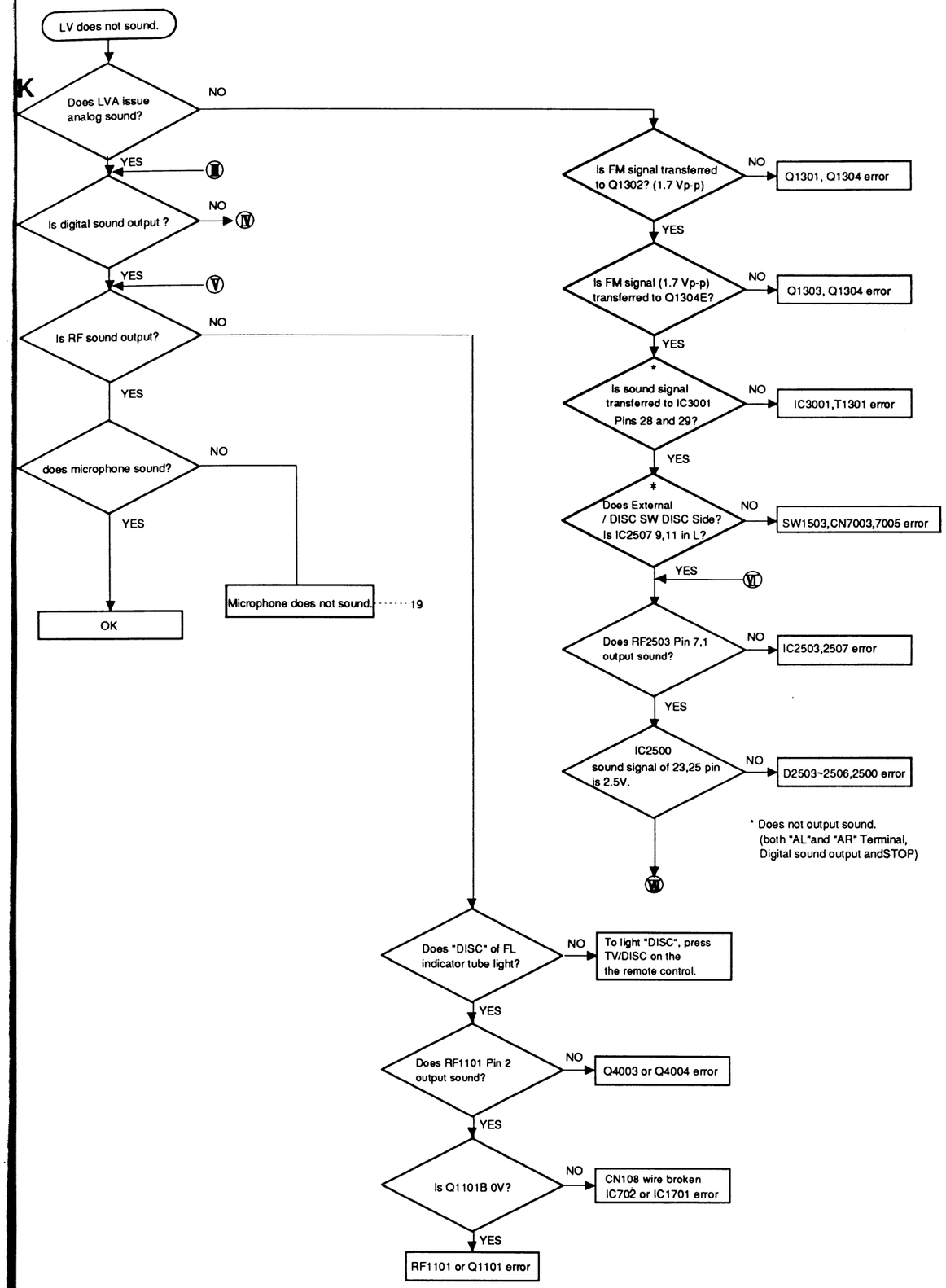
LV does not sound.
Does LVA issue analog sound?
NO
YES
Ⅲ
Is digital sound output ?
NO
Ⅳ
YES
Ⅴ
Is RF sound output?
NO
YES
does microphone sound?
NO
YES
OK
Microphone does not sound.
19
Is FM signal transferred to Q1302? (1.7 Vp-p)
NO
Q1301, Q1304 error
YES
Is FM signal (1.7 Vp-p) transferred to Q1304E?
NO
Q1303, Q1304 error
YES
* Is sound signal transferred to IC3001 Pins 28 and 29?
NO
IC3001,T1301 error
YES
* Does External / DISC SW DISC Side? Is IC2507 9,11 in L?
NO
SW1503,CN7003,7005 error
YES
Ⅵ
Does RF2503 Pin 7,1 output sound?
NO
IC2503,2507 error
YES
IC2500 sound signal of 23,25 pin is 2.5V.
NO
D2503~2506,2500 error
Ⅶ
* Does not output sound. (both "AL"and "AR" Terminal, Digital sound output andSTOP)
Does "DISC" of FL indicator tube light?
NO
To light "DISC", press TV/DISC on the the remote control.
YES
Does RF1101 Pin 2 output sound?
NO
Q4003 or Q4004 error
YES
Is Q1101B 0V?
NO
CN108 wire broken IC702 or IC1701 error
YES
RF1101 or Q1101 error

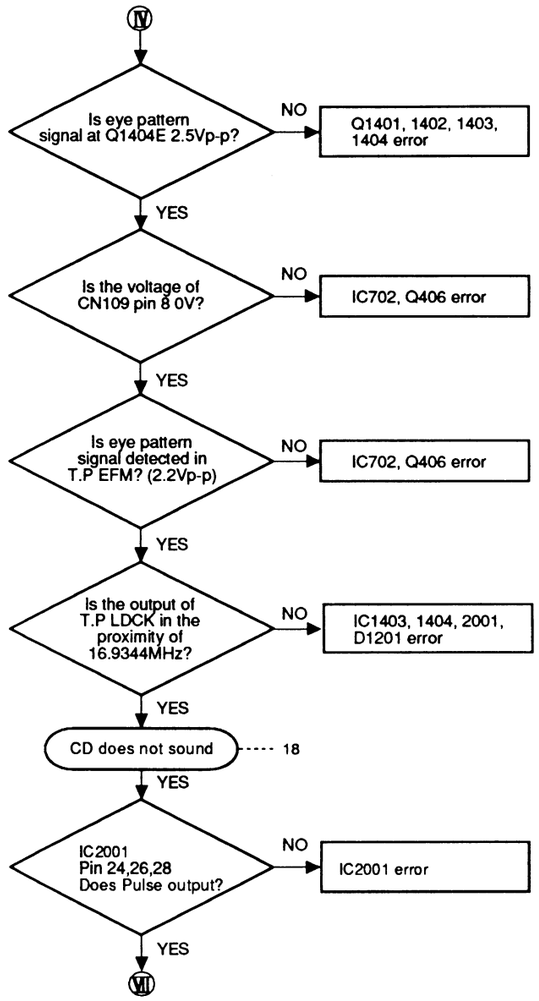
IV
Is eye pattern signal at Q1404E 2.5Vp-p?
NO
Q1401, 1402, 1403, 1404 error
YES
Is the voltage of CN109 pin 8 0V?
NO
IC702, Q406 error
YES
Is eye pattern signal detected in T.P EFM? (2.2Vp-p)
NO
IC702, Q406 error
YES
Is the output of T.P LDCK in the proximity of 16.9344MHz?
NO
IC1403, 1404, 2001, D1201 error
YES
CD does not sound
18
YES
IC2001 Pin 24,26,28 Does Pulse output?
NO
IC2001 error
YES
VII

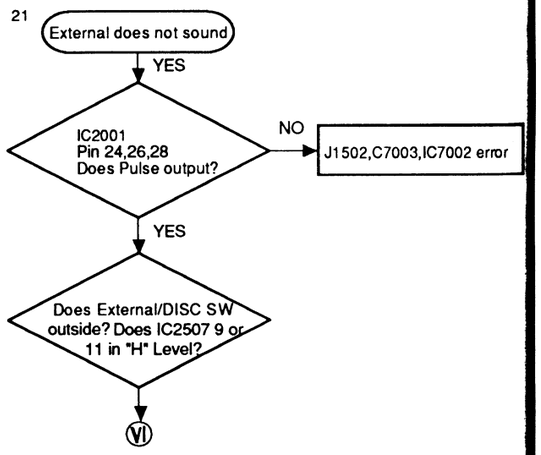
21
External does not sound
YES
IC2001 Pin 24,26,28 Does Pulse output?
NO
J1502,C7003,IC7002 error
YES
Does External/DISC SW outside? Does IC2507 9 or 11 in "H" Level?
VI

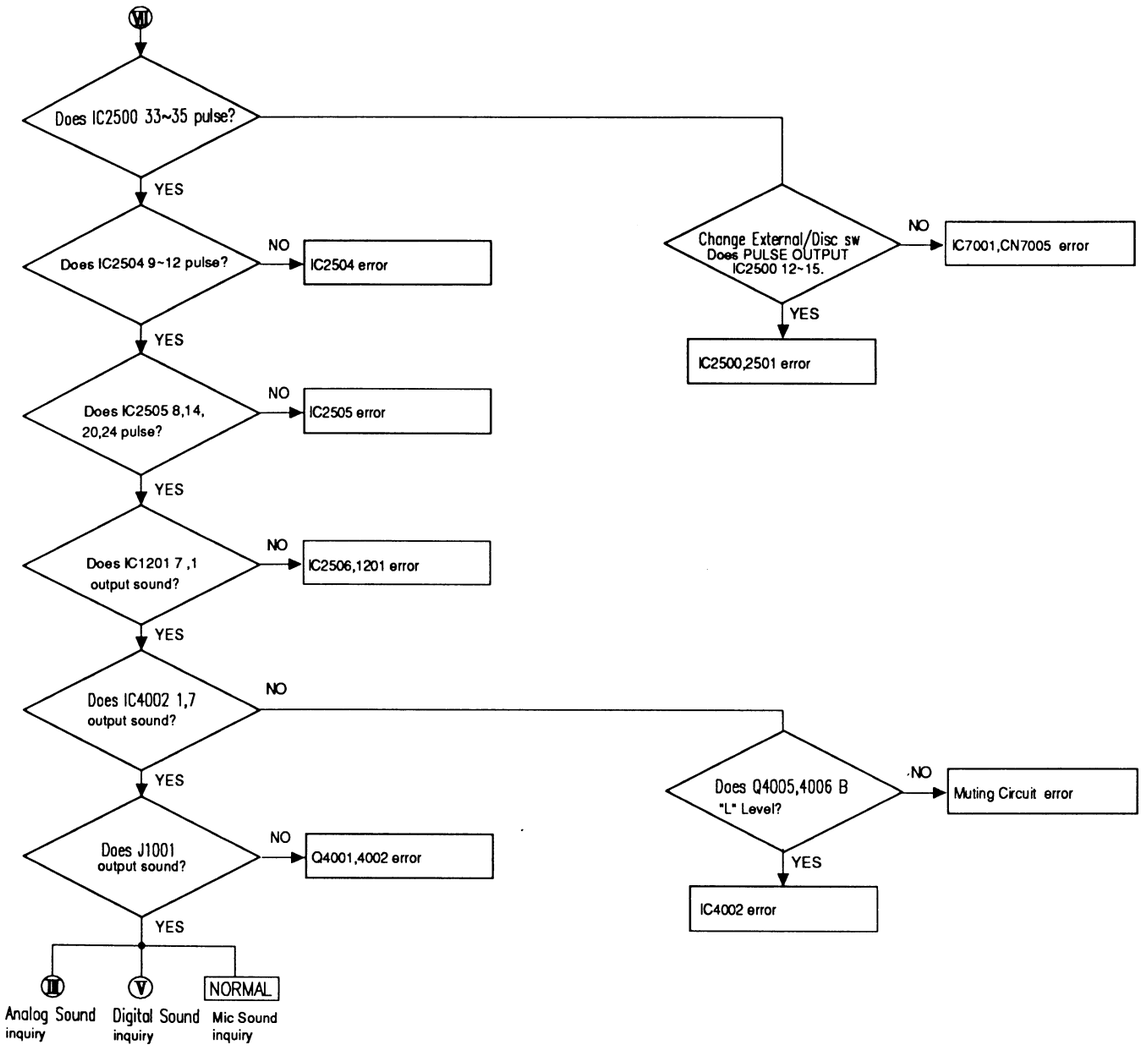
VII
Does IC2500 33~35 pulse?
YES
Does IC2504 9~12 pulse?
NO
IC2504 error
YES
Does IC2505 8,14, 20,24 pulse?
NO
IC2505 error
YES
Does IC1201 7 ,1 output sound?
NO
IC2506,1201 error
YES
Does IC4002 1,7 output sound?
NO
YES
Does J1001 output sound?
NO
Q4001,4002 error
YES
III
Analog Sound inquiry
V
Digital Sound inquiry
NORMAL
Mic Sound inquiry
Change External/Disc sw Does PULSE OUTPUT IC2500 12~15.
NO
IC7001,CN7005 error
YES
IC2500,2501 error
Does Q4005,4006 B "L" Level?
NO
Muting Circuit error
YES
IC4002 error

19

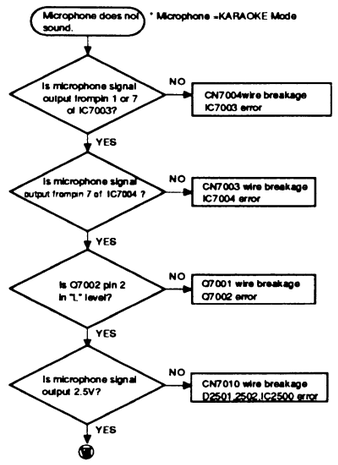
Microphone does not sound.
* Microphone →KARAOKE Mode
Is microphone signal output frompin 1 or 7 of IC7003?
NO
CN7004wire breakage IC7003 error
YES
Is microphone signal output frompin 7 of IC7004 ?
NO
CN7003 wire breakage IC7004 error
YES
Is Q7002 pin 2 in "L" level?
NO
Q7001 wire breakage Q7002 error
YES
Is microphone signal output 2.5V?
NO
CN7010 wire breakage D2501,2502,IC2500 error
YES

NOTES

IC INTERNAL DIAGRAM

IR3C02A

8 pin DIP switch plastic mold

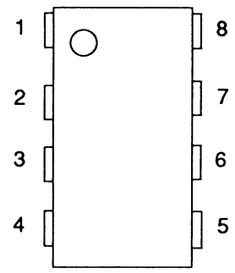

Top View

Terminal No.	Symbol	Description
1	OUT	Output
2	GND	Grounding
3	I_M	Monitor input
4	V_{ZZ}	Negative power source
5	V_{IN}	Controller input (on/off)
6	S_O	Operation signal output
7	C_P	Phase compensation
8	V_{CC}	Positive power source

Inner equivalent circuit

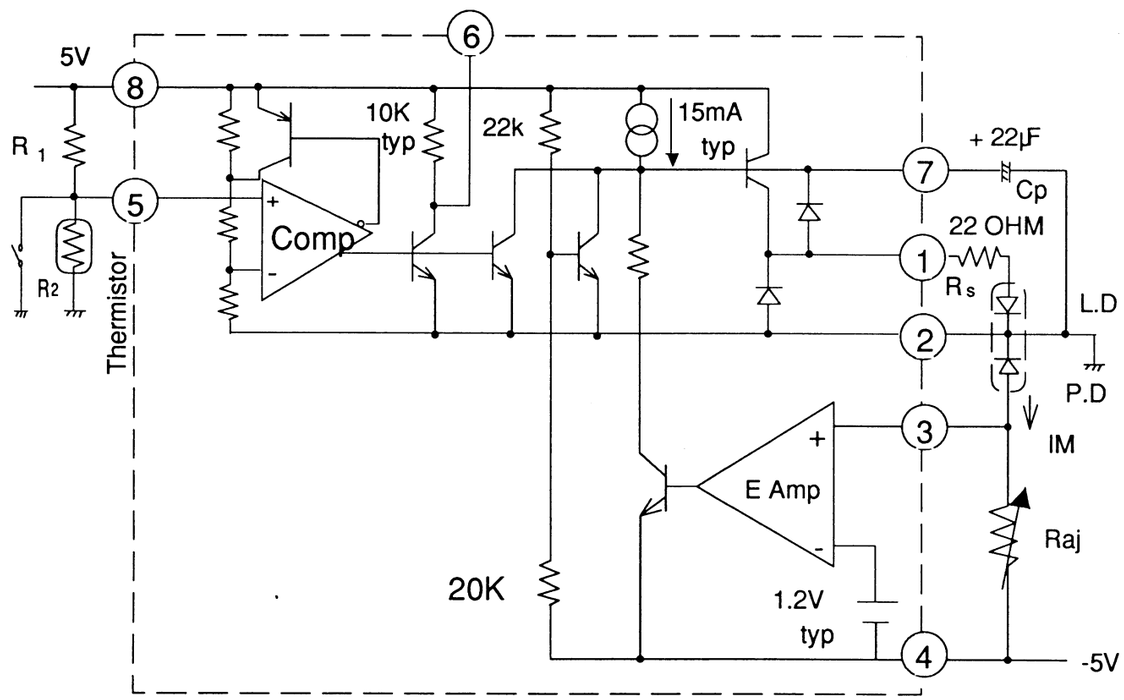

YM3567

1. Model: YM3567
2. Name: Fine time base collector
3. Application: Laser vision player
4. Process: YAMAHA C-MOS process
5. Casing: 16-pin plastic DIL package

6. Terminal layout

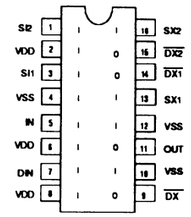

I: Input terminal
0: Output terminal

7. Terminal function

PIN #	Terminal name	I/O	Description
1	SI2	I	CH2 sound (2.8 MHz) input
2	VDD	I	CH1 and CH2 sound + power source
3	SI1	I	CH1 sound (2.3 MHz) input
4	VSS	I	CH1 and CH2 sound – power source
5	IN	I	Delay line input
6	VDD	I	Delay line + power source
7	DIN	I	Video (8.45 MHz) dropout DEP input
8	VDD	I	Video dropout DET + power source
9	$\overline{DX}$	O	Video dropout DET output (Normally, in "H" level)
10	VSS	I	Video dropout DET – power source
11	OUT	O	Delay line output
12	VSS	I	Delay line – power source for delay time adjustment
13	SX1	I	CH1 sound FM DET output
14	$\overline{DX1}$	O	CH1 sound dropout DET output (Normally, in "H" level)
15	$\overline{DX2}$	O	CH2 sound dropout DET output (Normally, in "H" level)
16	SX2	I	CH2 sound FM DET output

8. Block diagram

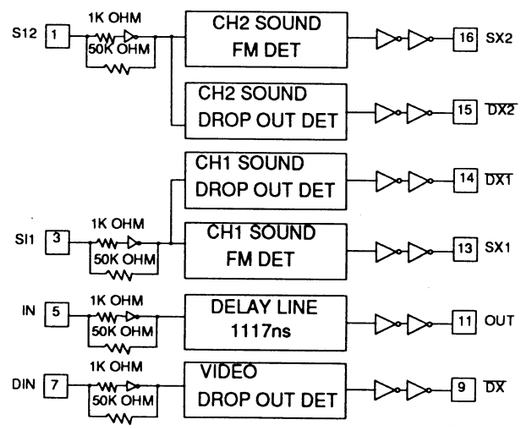

YM6103

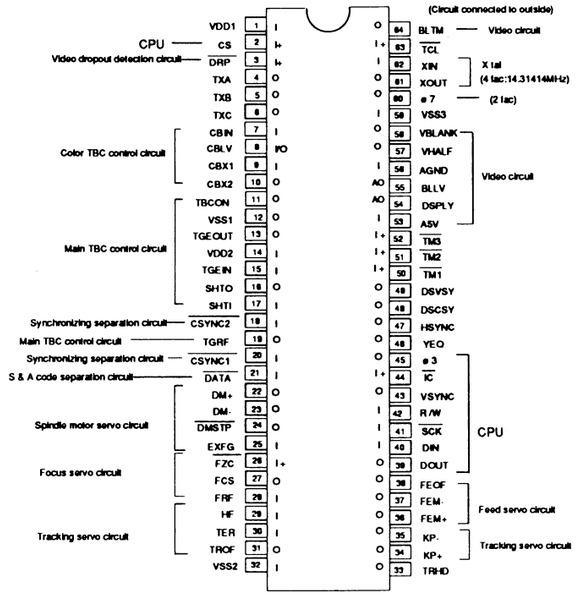

I: Input terminal
I+ : Input terminal (with pull-up resistor)
I/O: Input/output terminal .ULON

O: Output terminal
AO: 1/2-bit delay analog output terminal

Block diagram

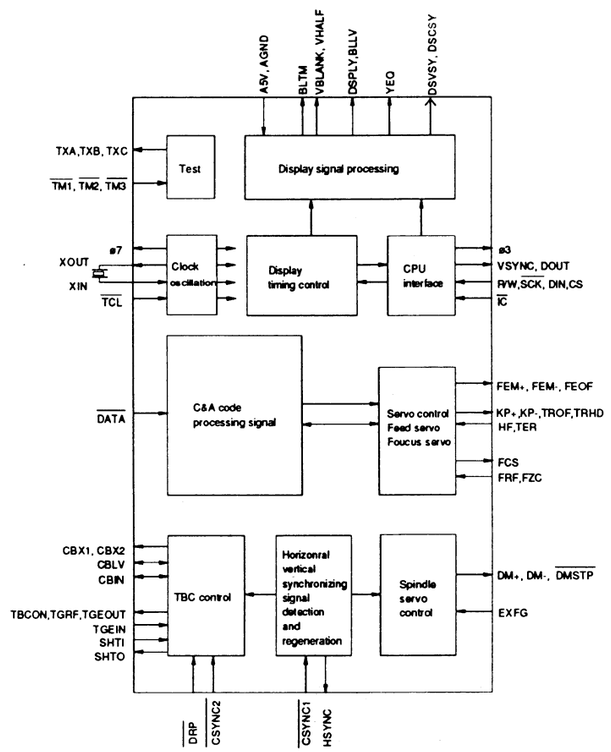

Terminal function

PIN #	Terminal name	I/O	Description
1	VDD1	I	Terminal of digital signal +5V power source terminal
2	CS	I+	Input terminal of CPU input/output enable signal
3	$\overline{DRP}$	I+	Input terminal of dropout detection signal
4	TXA	O	Output terminal of test signal (No-connection terminal)
5	TXB	O	
6	TXC	O	
7	CBIN	I	Input terminal of color burst signal
8	CBLV	I/O	Terminal of color bust signal feed back (CBIN and CBLV resistors are connected outside)
9	CBX1	O	Output terminal of color burst phase difference signal (Positive phase)
10	CBX2	O	Output terminal of color burst phase difference signal (Negative phase)
11	TBCON	O	Output terminal of TBC control stability signal
12	VSS1	I	Grounding terminal of pins 2 through 18 signals
13	TGEOUT	O	Output signal of main TBC phase difference signal
14	VDD2	I	+5V terminal of pins 7 through 18 signals
15	TGEIN	I	Input terminal of sawtooth wave
16	SHTO	O	Output terminal of sample hold timing signal
17	SHTI	I	Input terminal of sample hold control signal
18	$\overline{CSYNC2}$	I	Input terminal of combined synchronizing signal 2 (After passing through main TBC)
19	TGRF	O	Output terminal of sawtooth wave generation standard signal
20	$\overline{CSYNC1}$	I	Input terminal of combined synchronizing signal 1 (Before passing through main TBC)
21	$\overline{DATA}$	I	Input terminal of control and address signals
22	DM^+	O	Output terminal of disc motor acceleration signal
23	DM^-	O	Output terminal of disc motor deceleration signal
24	$\overline{DMSTP}$	O	Output terminal of disc motor control off signal
25	EXFG	I	Input terminal of outer FG signal
26	$\overline{F2C}$	I+	Input terminal of focus zero crossing signal
27	FCS	O	Output terminal of focus search signal
28	FRF	I	Input terminal of focus reflection signal
29	HF	I	Input terminal of HF signal
30	TER	I	Input terminal of tracking error signal
31	TROF	O	Output terminal of tracking servo off signal
32	VSS2	I	Grounding terminal of digital signal (excluding pins 2 through 18)
33	TRHD	O	Output terminal of tracking hold signal
34	KP^+	O	Output terminal of kick pulse in outer periphery direction
35	KP^-	O	Output terminal of kick pulse in inner periphery direction
36	FEM^+	O	Output terminal of feed pulse in outer periphery direction
37	FEM^-	O	Output terminal of feed pulse in inner periphery direction
38	FEOF	O	Output terminal of feed servo off signal
39	DOUT	O	Output terminal of data to CPU
40	DIN	I	Input terminal of data from CPU
41	$\overline{SCK}$	I	Input terminal of CPU data input/output clock signal
42	R/W	I	Input terminal of CPU data input/output control signal
43	VSYNC	O	Output terminal of vertical synchronizing timing pulse
44	$\overline{IC}$	I+	Input terminal of reset pulse
45	ϕ3	O	Output terminal of fsc clock
46	YEQ	O	Output terminal of character indication scan timing signal
47	HSYNC	O	Output terminal of horizontal synchronizing signal (CSYNC1 system)

PIN #	Terminal name	I/O	Description
48	DSCSY	O	Output terminal of combined synchronizing signal
49	DSVSY	O	Output terminal of vertical synchronizing signal
50 51 52	$\overline{TM1}$ $\overline{TM2}$ $\overline{TM3}$	I+ I+ I+	Input terminal of test mode signal (No-connection terminal)
53	A5V	I	+5V power source terminal of built-in DAC
54	DSPLY	AO	Output terminal of inner generated image DAC (6 bits)
55	BLLV	AO	Output terminal of blanking level
56	AGND	I	Grounding terminal of built-in DAC
57	VHALF	O	Output terminal of video signal half level control signal
58	VBLANK	O	Output terminal of video signal blanking level control signal
59	VSS3	I	Grounding terminal of digital signals (excluding pins 2 through 18)
60	ϕ	O	Output terminal of 2 fsc clock signal
61 62	XOUT XIN	O I	Crystal oscillation made between XIN and XOUT Frequency: 4 fsc (14.31818 MHz) (Possible to input directly from out side to XIN)
63	$\overline{TCL}$	I+	Input terminal of test signal (No-connection terminal)
64	BLTM	O	Output terminal of blanking level clamp timing signal

I: Input terminal
I+: Input terminal (with pull-up resistor)
I/O: Input/output terminal
O: Output terminal
AO: Output terminal of 1/2-bit (17) delay analog signal

LA9200NM

External view of 31020Q480IC

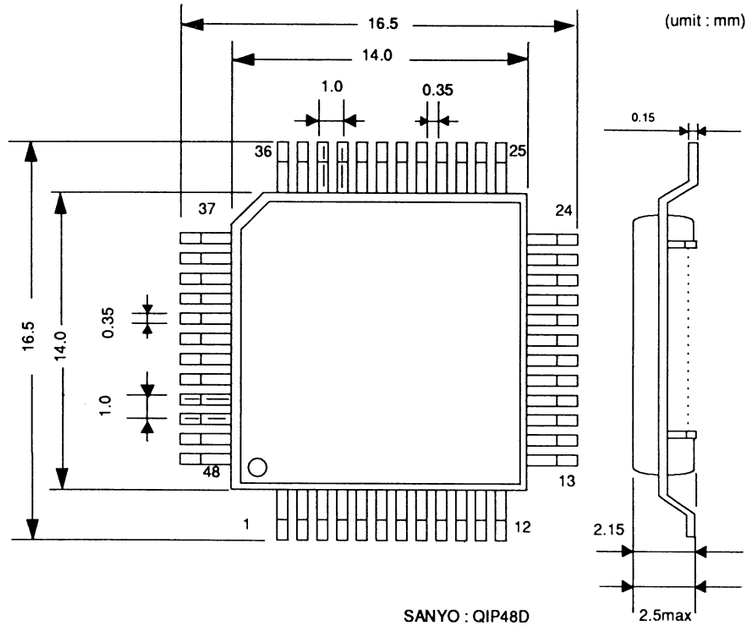

Block diagram

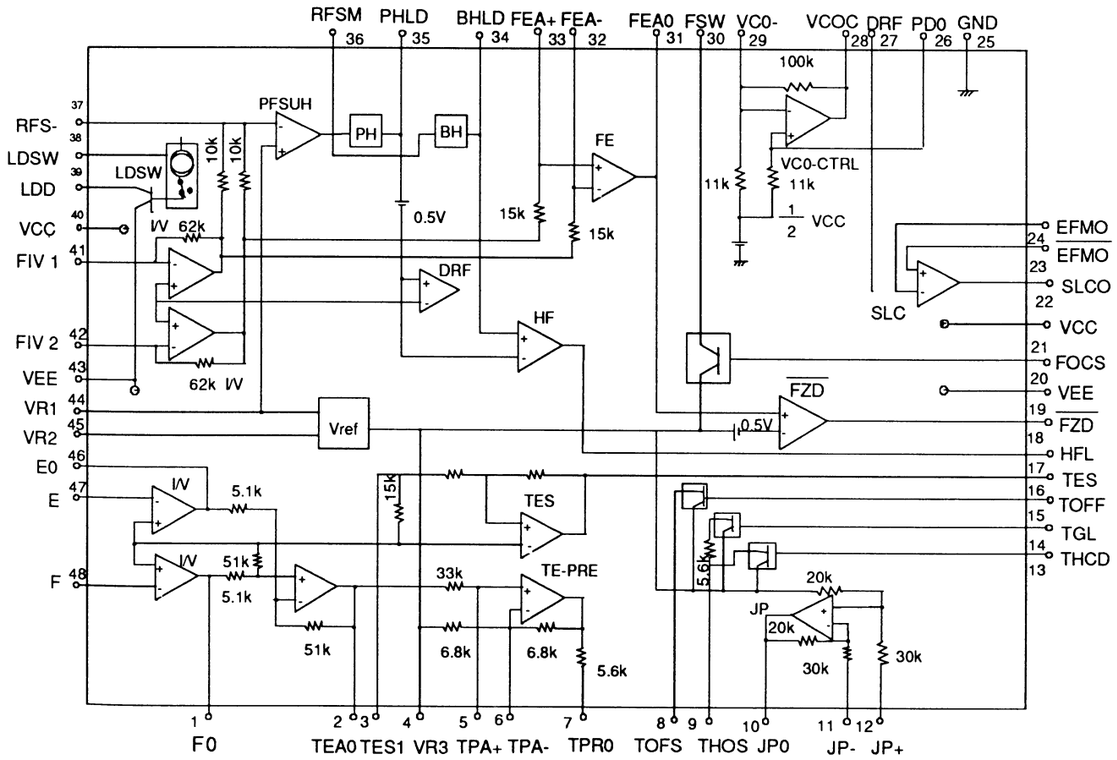

STA451C

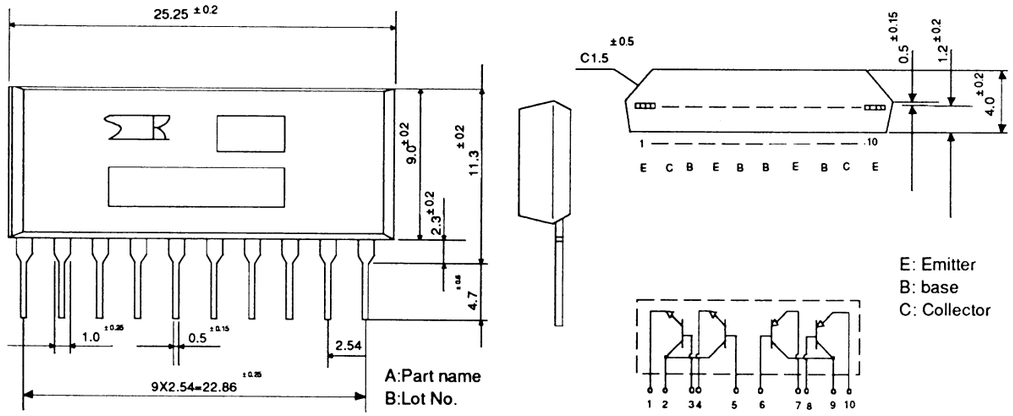

YM3598

1. Model: YM3599B
2. Name: Video FM disc
3. Application: Laser vision player
4. Process: YAMAHA C-MOS process
5. Casing: 16-pin plastic DIP

6. Terminal layout

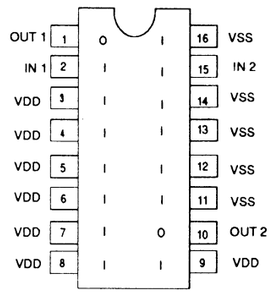

I: Input terminal
O: Output terminal

7. Terminal function

PIN #	Terminal name	I/O	Description
1	OUT1	O	Limitter Amp Output
2	IN1	I	Limitter Amp Input
3~8	VDD	I	Power Source
9, 11~14, 16	VSS	I	Negative Power Source,Delay time Adj.
10	IN2	I	Delay Line Input
15	OUT2	O	Delay Line Output

8.

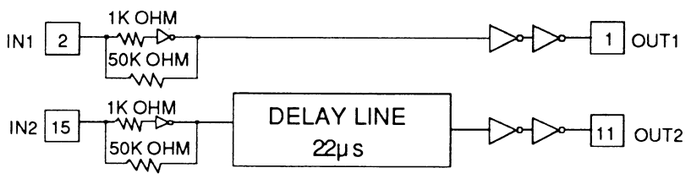

YM3558

1. Model: YM3558
2. Name: Video FM disc
3. Application: Laser vision player
4. Process: YAMAHA C-MOS process
5. Casing: 16-pin plastic DIP

6. Terminal layout

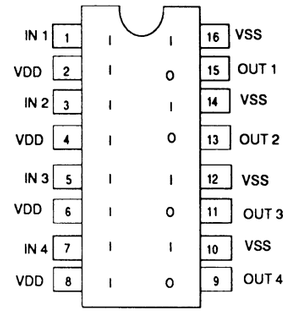

I: Input terminal
O: Output terminal

7. Terminal function

PIN #	Terminal name	I/O	Description
1	IN1	I	Video (8.45 MHz) FM DET input
3	IN2	I	Video (8.45 MHz) FM DET input
5	IN3	I	Video (8.45 MHz) FM DET input
7	IN4	I	Video (8.45 MHz) FM DET input
2.4.6.8	VDD	I	+ power source
9	OUT4	O	Video (8.45 MHz) FM DET input
11	OUT3	O	Video (8.45 MHz) FM DET input
13	OUT2	O	Video (8.45 MHz) FM DET input
15	OUT1	O	Video (8.45 MHz) FM DET input
10.12.14.16	VSS	I	– power source

8. Block diagram

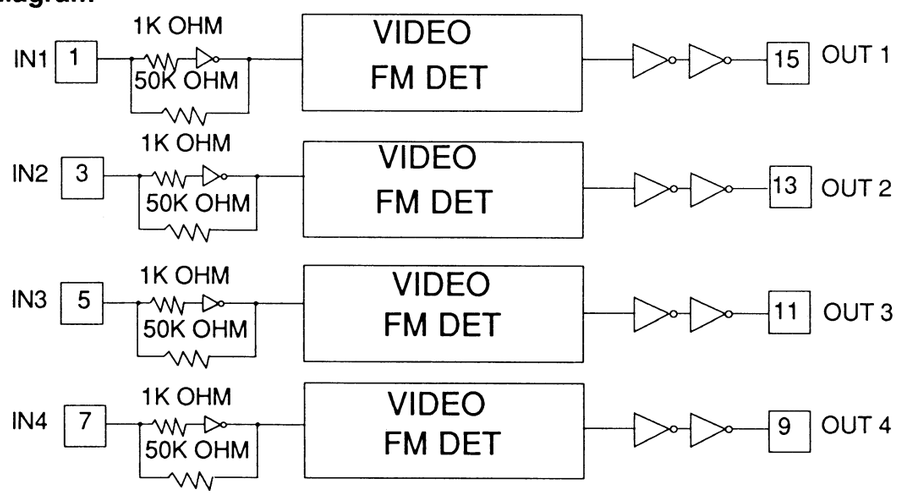

BA4558NDX
NJM4558LD

Dimensions

BA4558

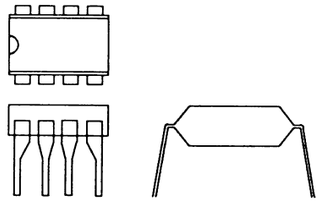

BA4558F

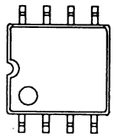

BA4558N

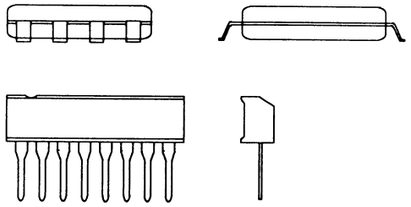

BA4558/BA4558F

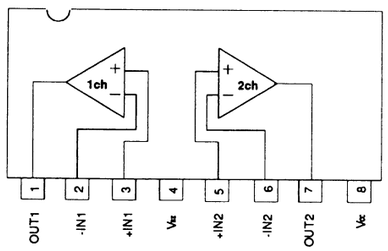

BA4558N

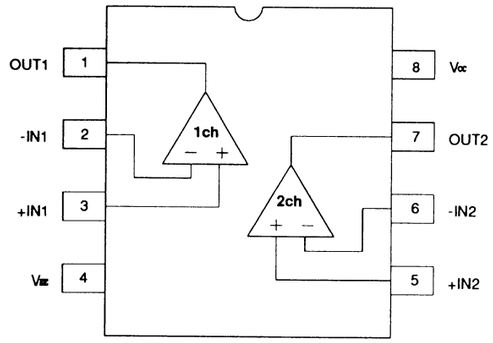

TA7061BP

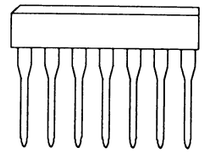

Inner equivalent circuit and optional parts

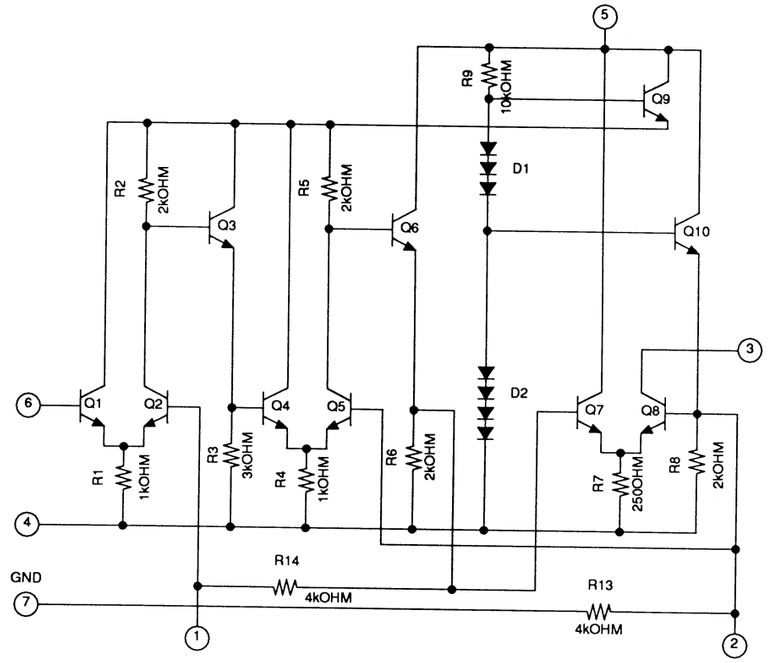

PST-520F

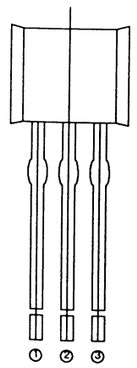

Inner equivalent circuit

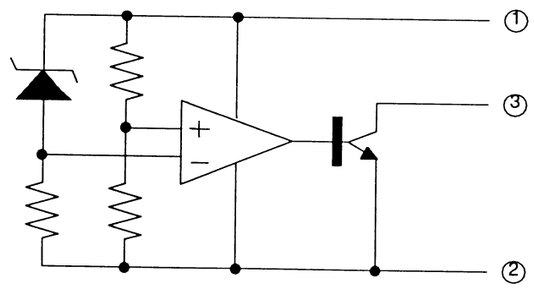

μPD75516GF-216-3B9

80-Pin Plastic QFP Dimension

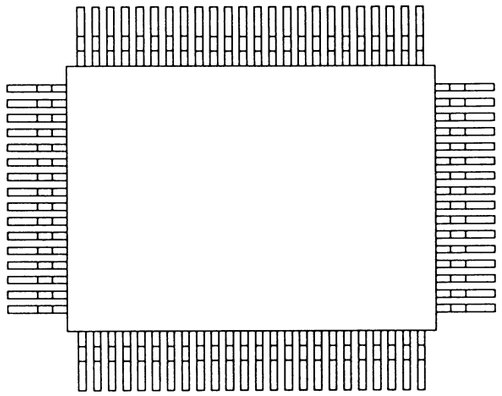

BA6209

Dimension

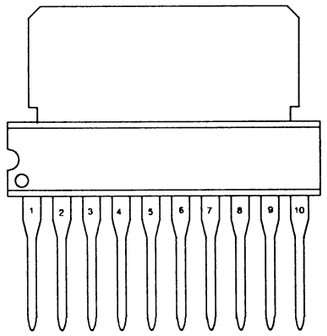

Block Diagram

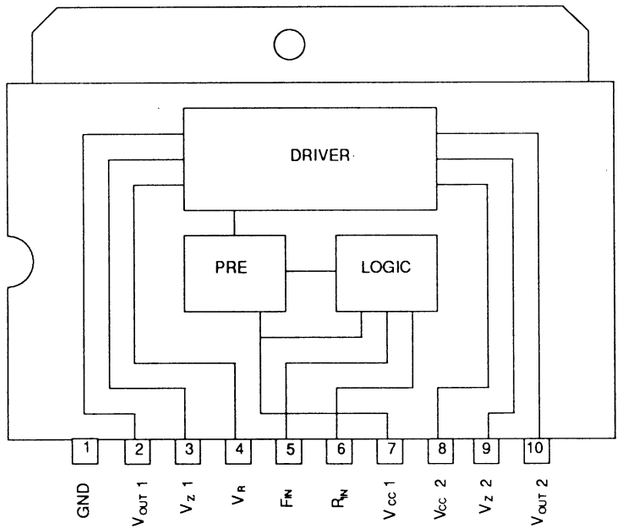

BU4053BP

NJU4053BD

ILogic Diagram

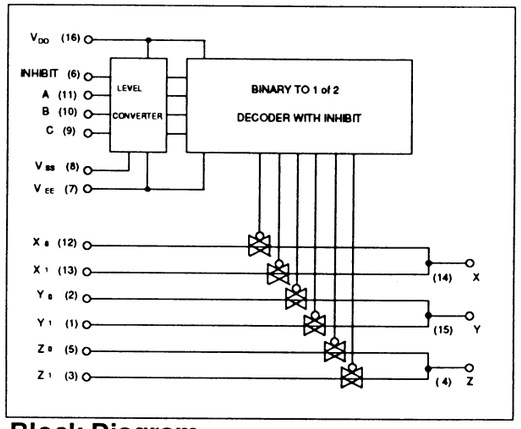

Block Diagram

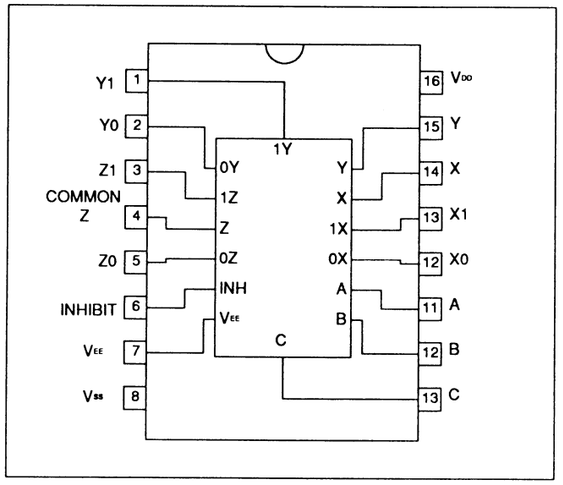

μPD74HCU04

Block Diagram (Top View)

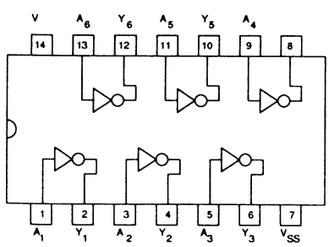

14-Pin Plastic DIP (300 mil) Dimension

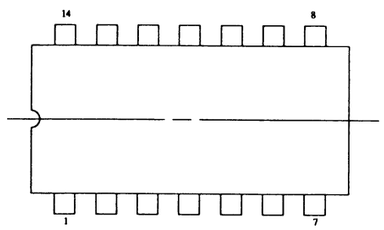

NJM4556L

NJM072L

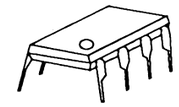

NJM4556D

NJM072BD/082BD

NJM072D/082D

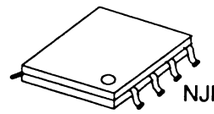

NJM4556M-B

NJM072M/082M

NJM072BM/082BM

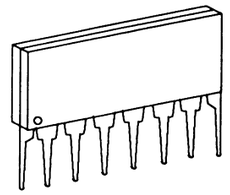

NJM4556L

NJM072L/NJM082L

NJM072BL/NJM082BL

Block Diagram

D, M TYPE
(Top View)

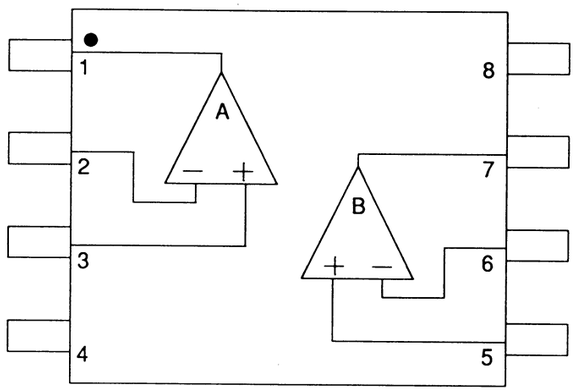

PIN ASSIGNMENT

1 . A OUTPUT
2 . A-INPUT
3 . A+INPUT
4 . V⁻
5 . B+INPUT
6 . B-INPUT
7 . B OUTPUT
8 . V⁺

L TYPE

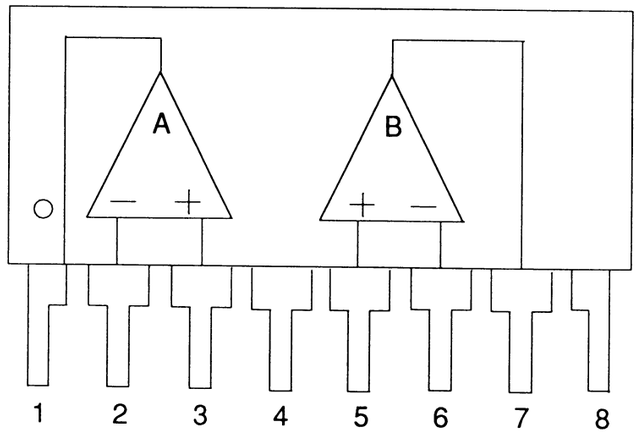

WIRING DIAGRAM

MAIN A VERSION

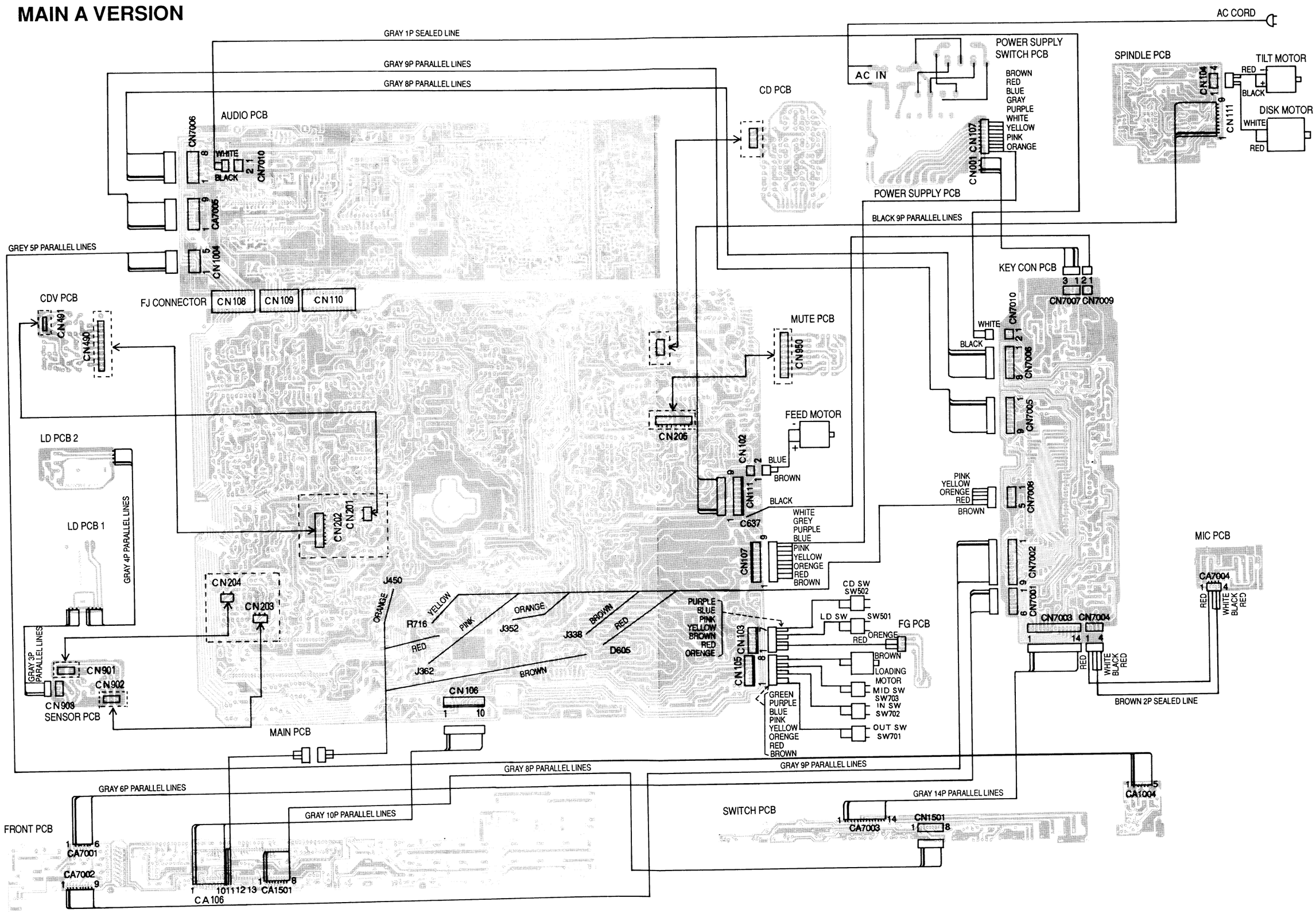

MAIN B VERSION

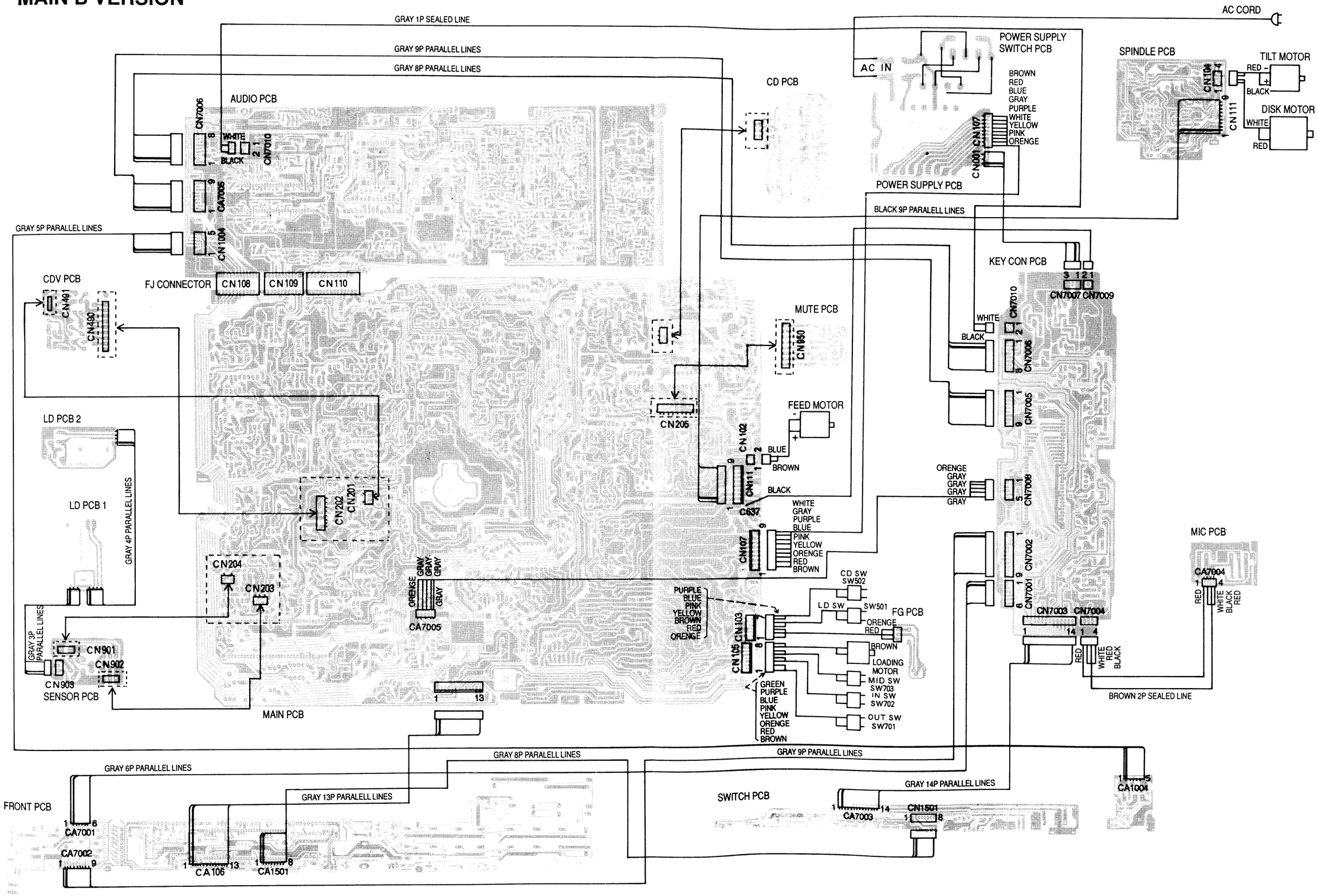

P.C.BOARD VIEWS

MAIN PCB (1614560A)

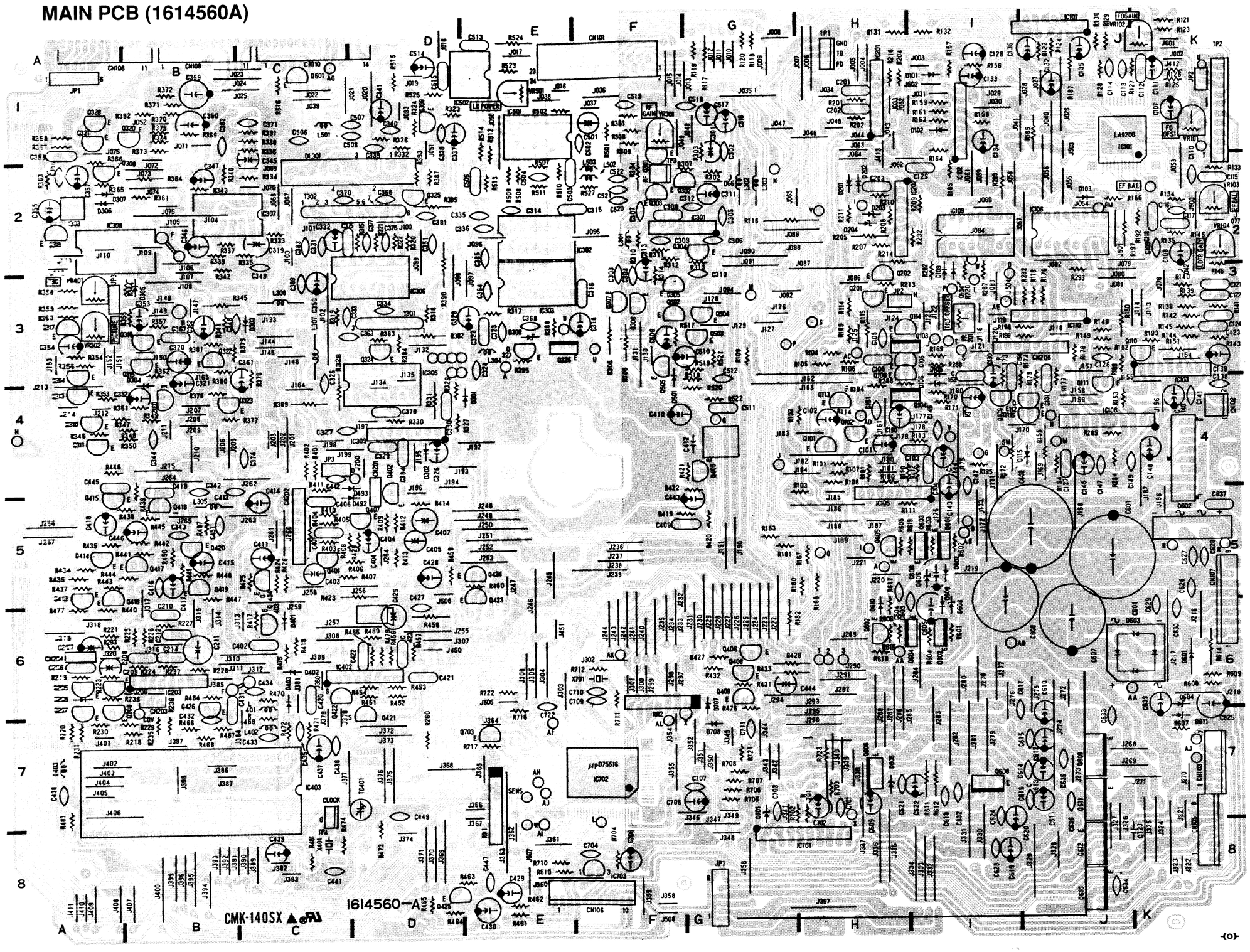

MAIN PCB (1614560B)

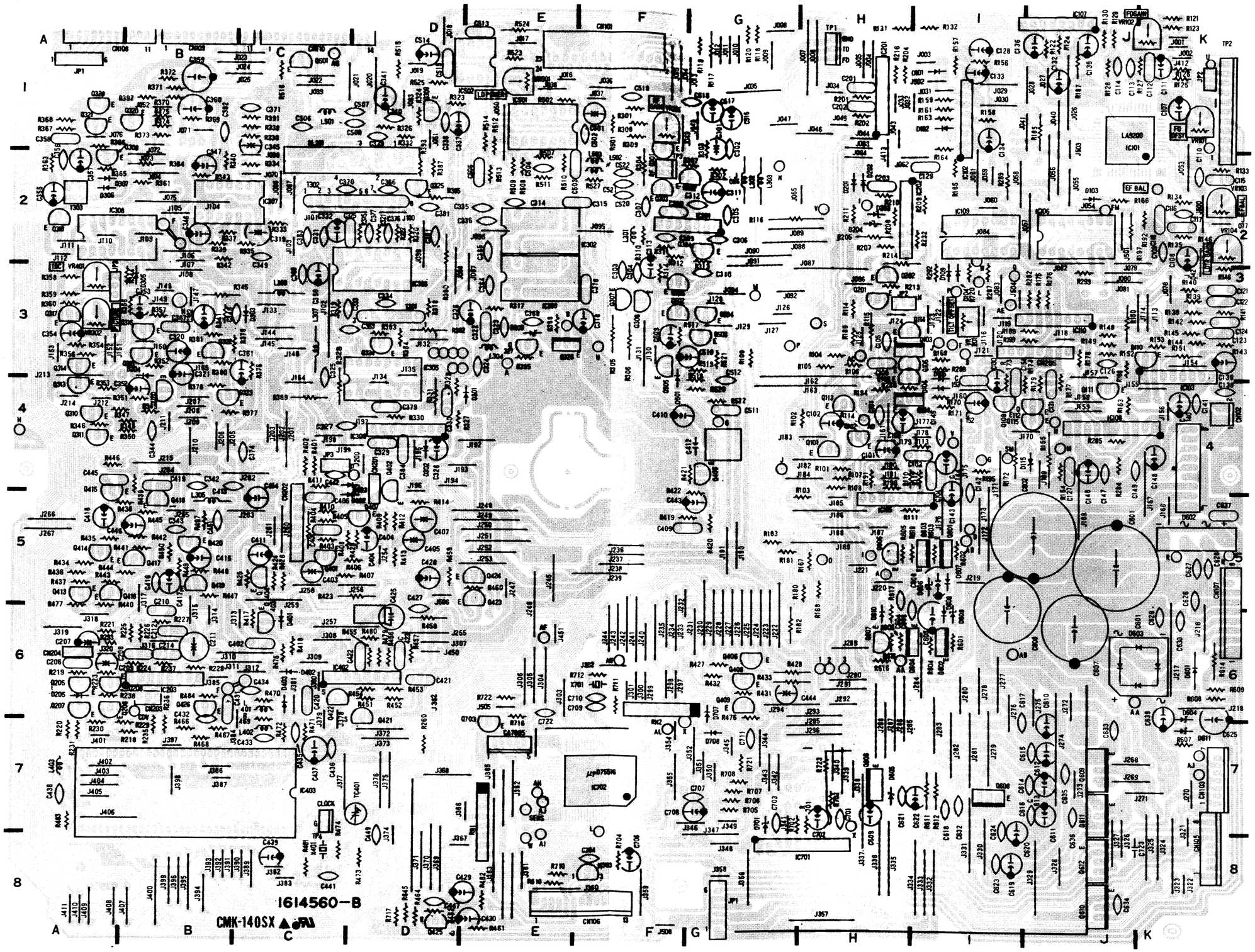

AUDIO PCB TOP VIEWS

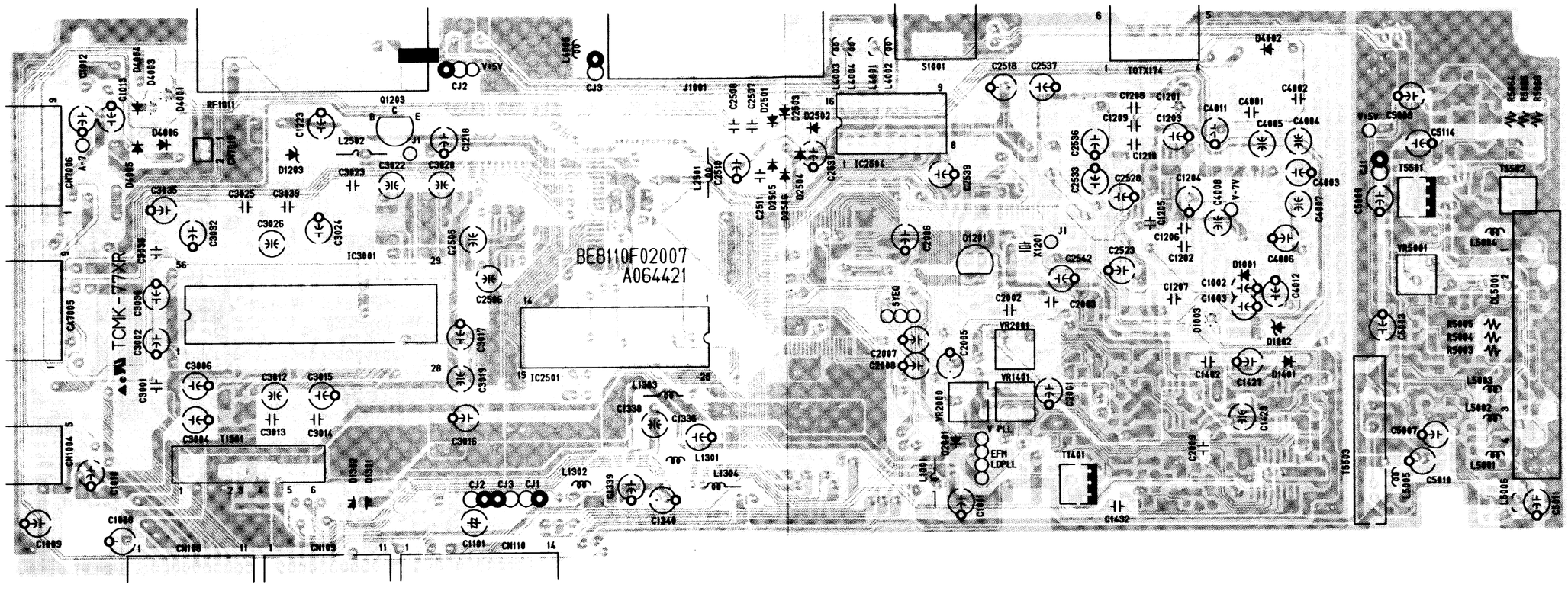

AUDIO PCB BOTTOM VIEWS

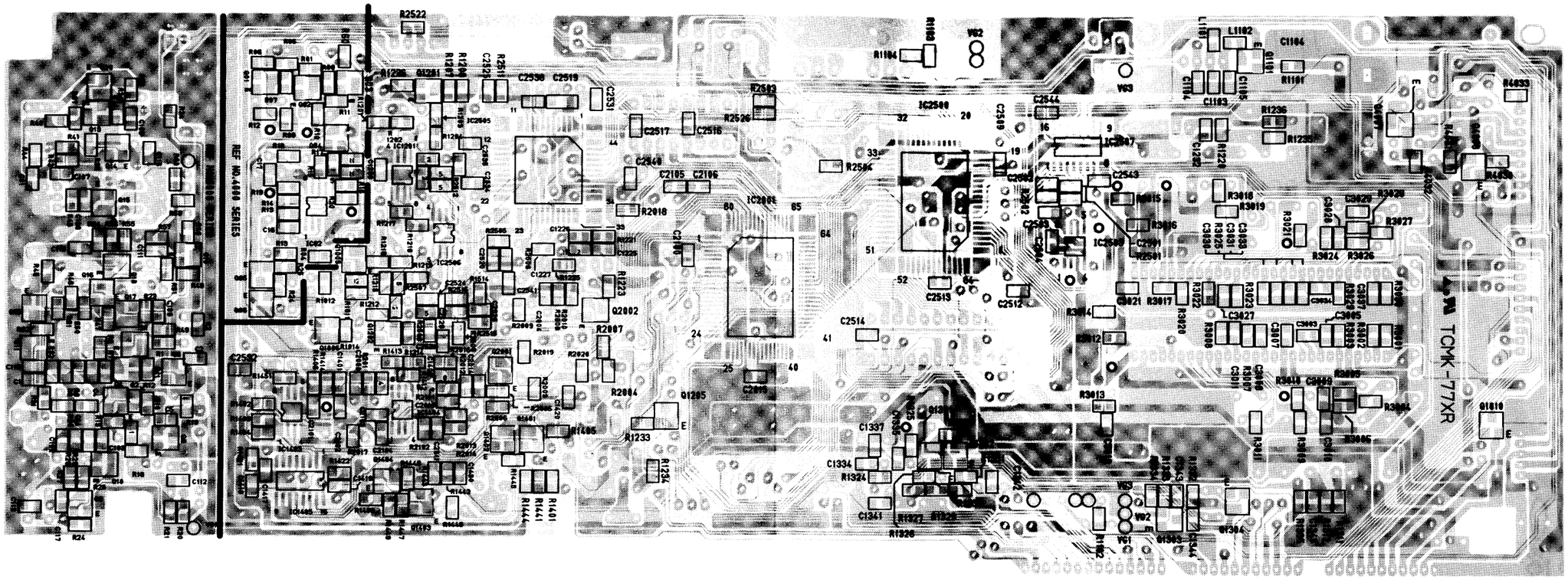

POWER SUPPLY PCB

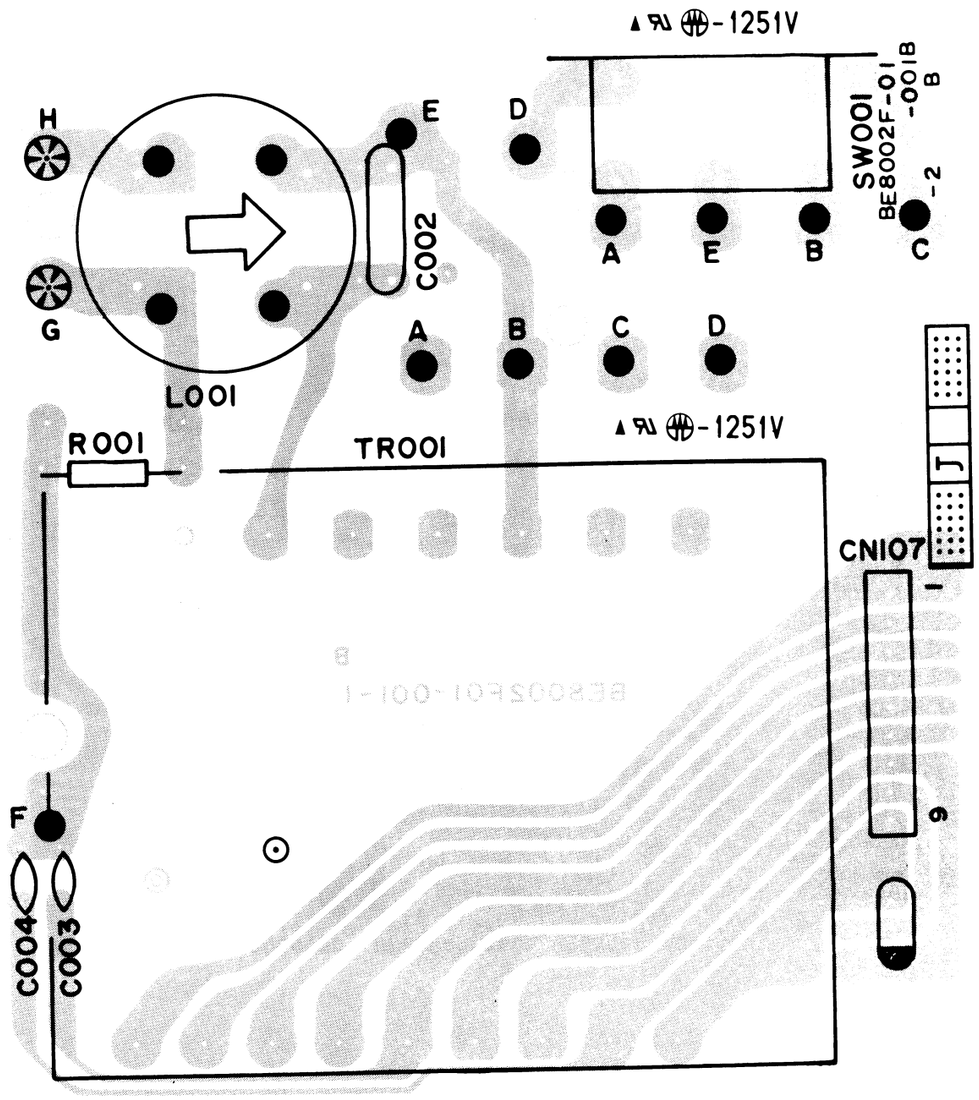

SPINDLE PCB

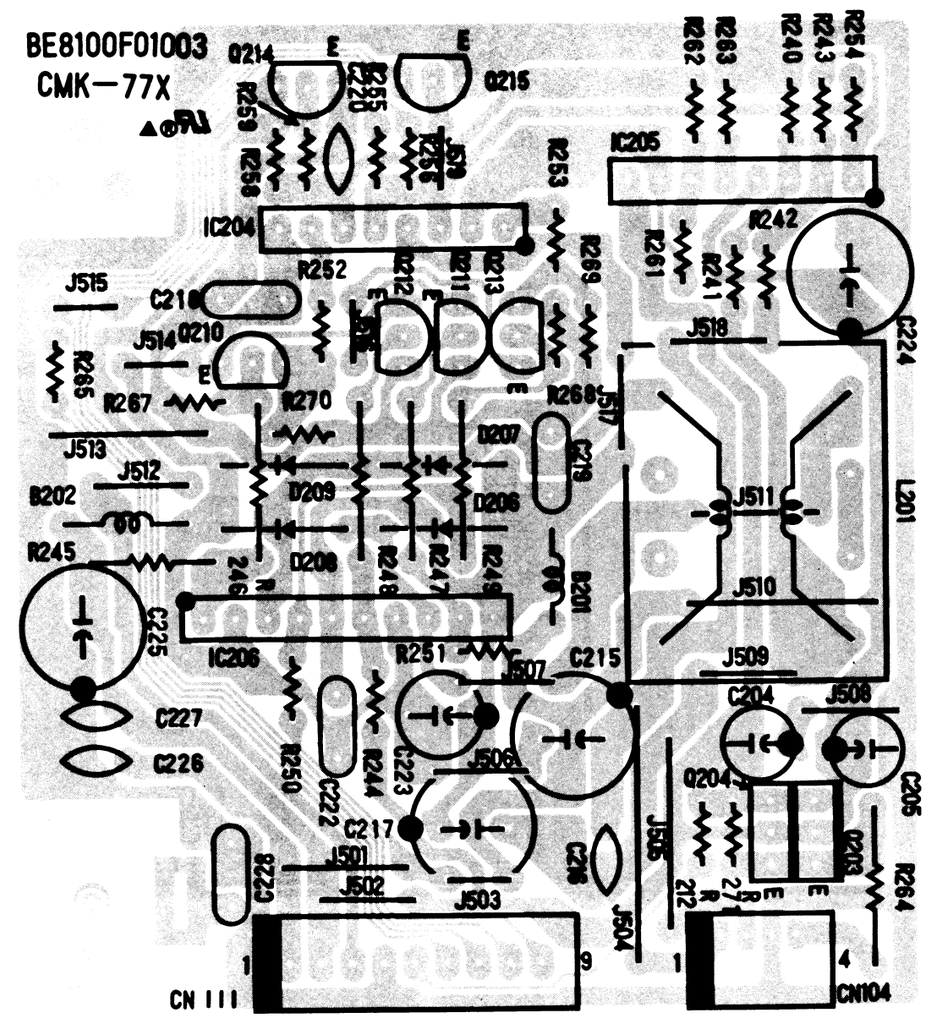

KEY CONTROL PCB

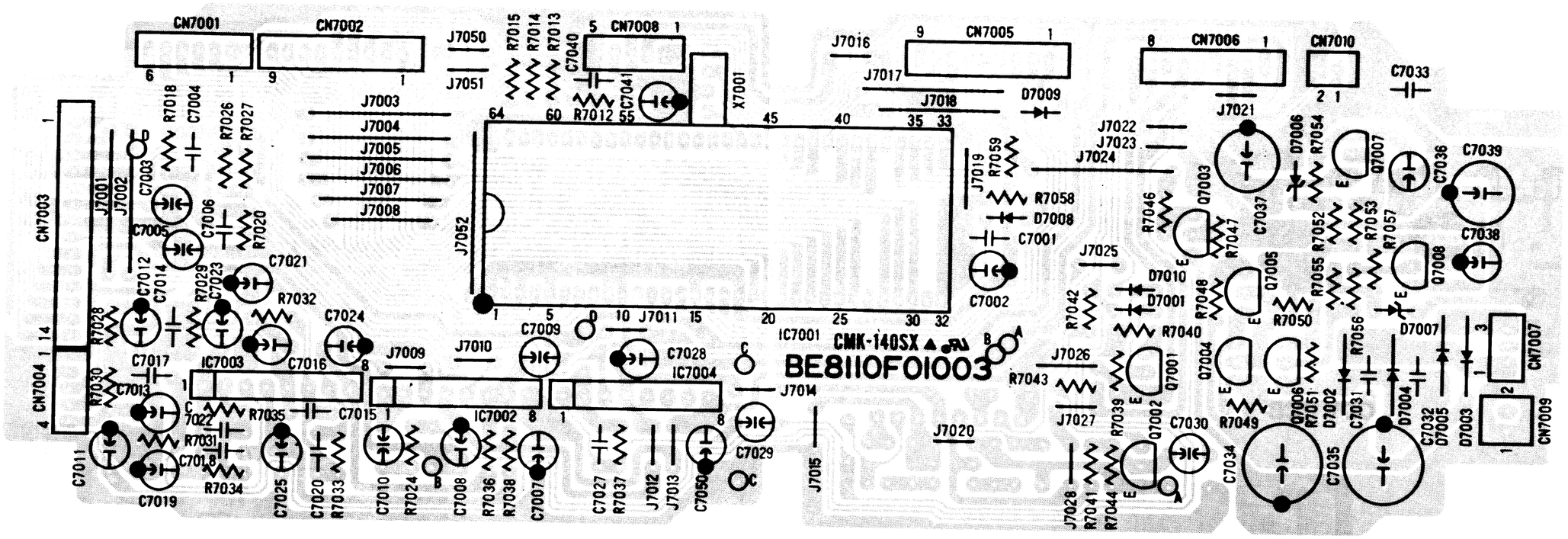

SENSOR PCB

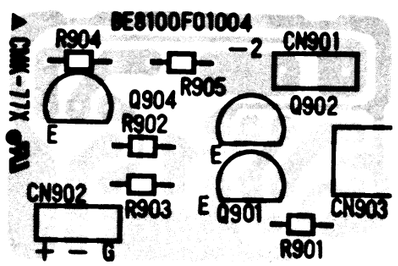

FG PCB

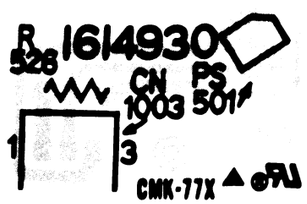

MUTE PCB

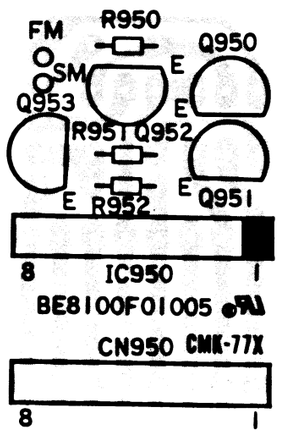

LD PCB

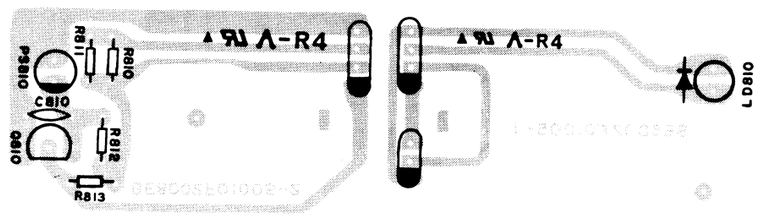

CD PCB

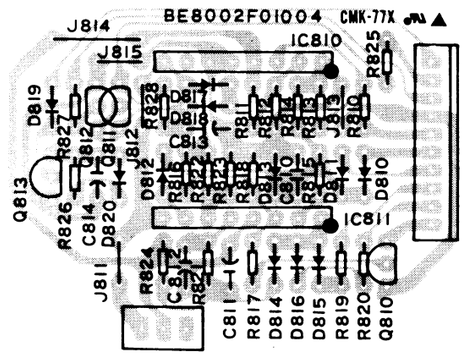

FRONT PCB

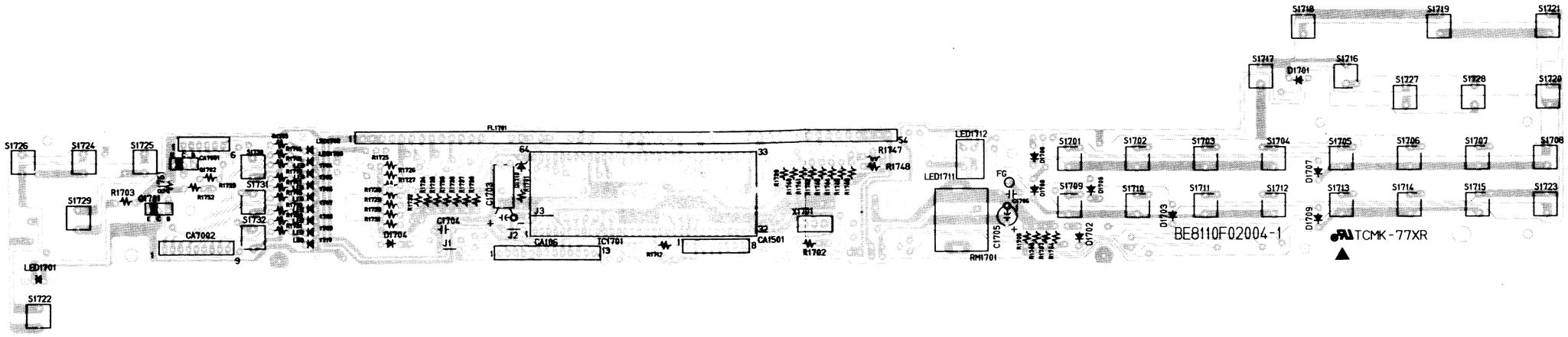

CDV PCB

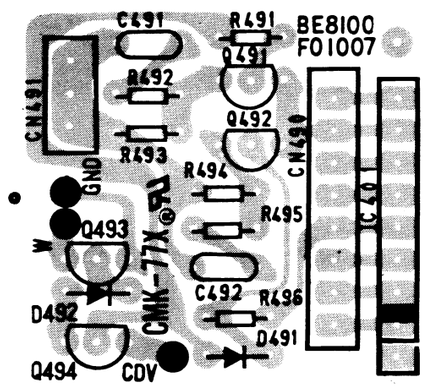

MIC PCB

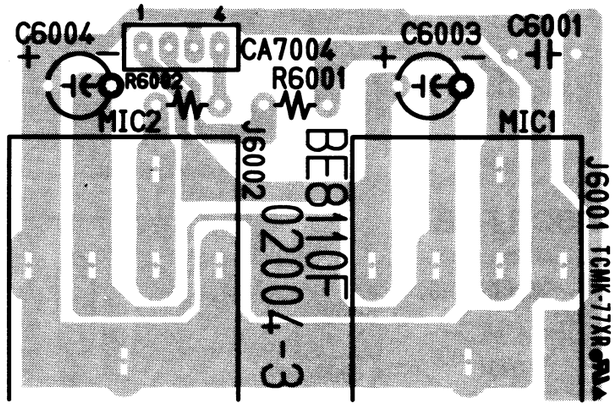

SWITCH PCB

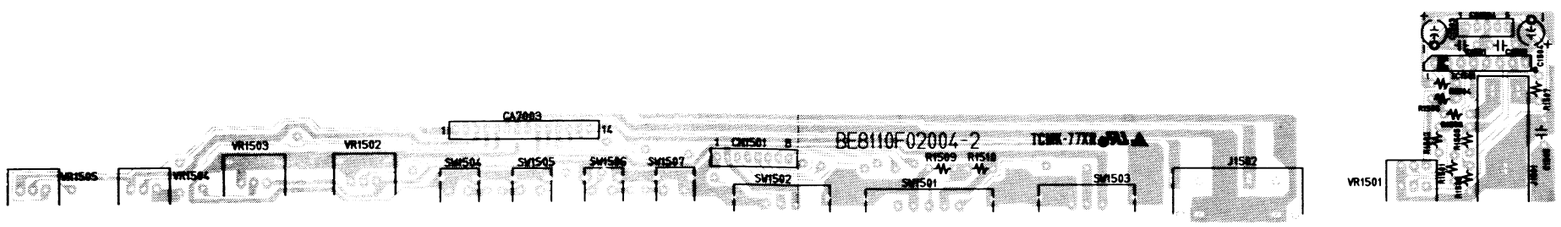

CD PCB

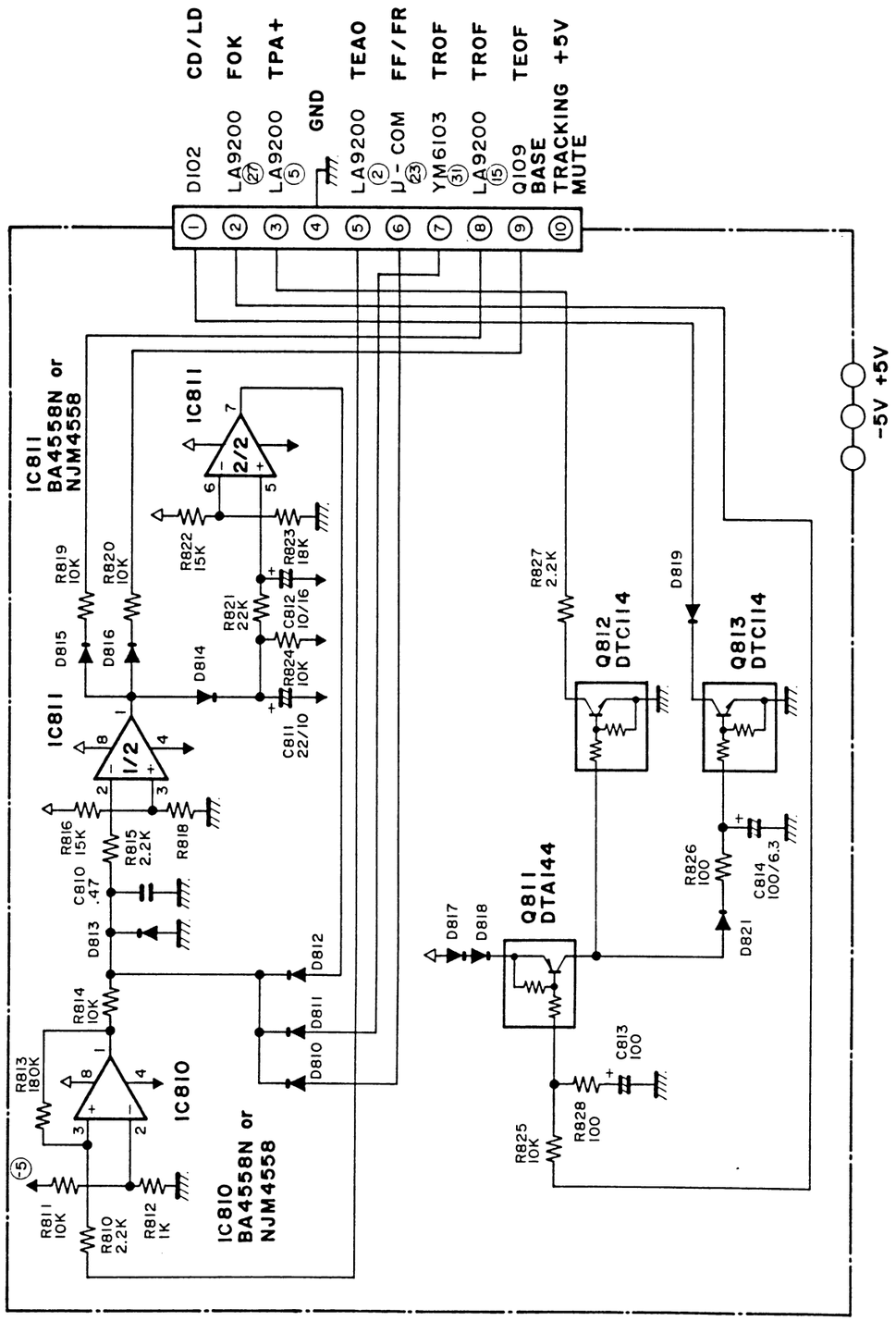

LD PCB

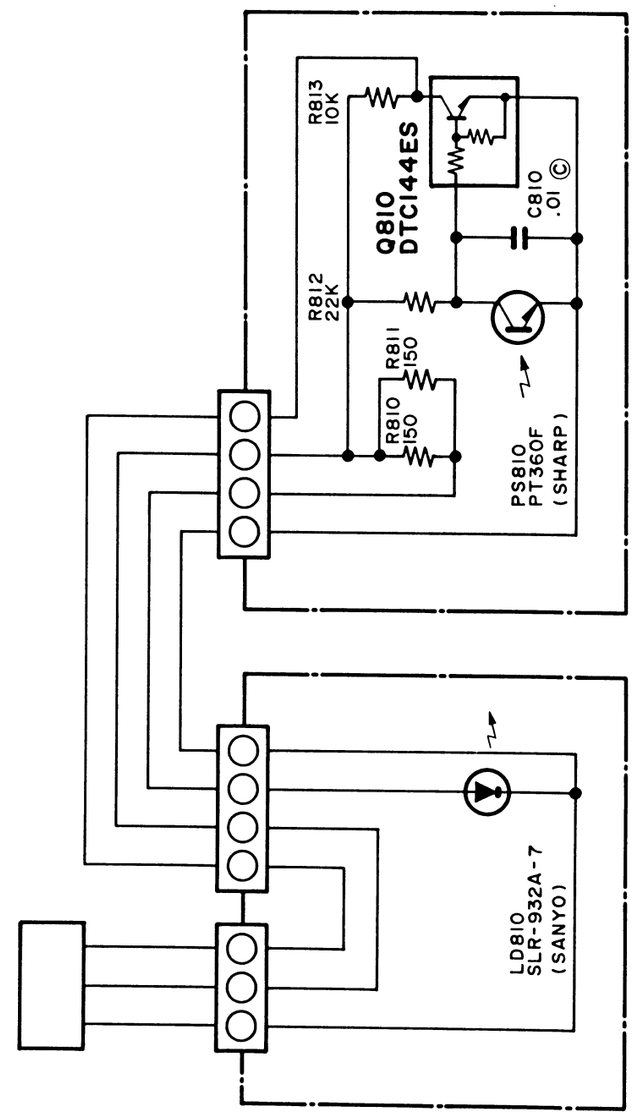

LD 30cm / 20cm

LD PCB

ELECTRICAL PARTS LIST

PRODUCT SAFETY NOTE: Products marked with a ⚠ have special characteristics important to safety. Before replacing any of these compornents, read carefully the product safety notice of this service manual. Don't degrade the safety of the product through improper servicing.

Tolerance of Capacitors and Resistors are noted with the following symbols.

C.....±0.25%	J.....±5%	Z.....+80/-20%
D.....±0.5%	K.....±10%	X.....+40/-20%
F.....±1%	M.....±20%	P.....+100%
G.....±2%	N.....±30%	

MAIN PCB

Ref.NO.	Description	Part No.
	MAIN PCB ASS'Y	0RSA01088
	CAPACITORS	
C101	ELECTROLYTIC CAP. 22UF/10V M	126B226S
C102	ELECTROLYTIC CAP. 22UF/10V M	126B226S
C103	M-CAP 92GW50V123J-5FT	125U123S
C103	POLYESTER FILM CAP. 0.012UF/50V J	2254123S
C104	STACKED FILM CAP. 0.033UF/50V J or	125U333S
	MYLAR CAP. 0.033UF/50V J	2254333S
C105	CERAMIC CAP. B K 150PF/50V	32B3151S
C106	M-CAP 92GW50V224J-5FT or	125U224S
	MPF-CAP 0.22UF/50V J	122Z313S
C107	ELECTROLYTIC CAP. 100UF/6.3V M	126A107S
C108	ELECTROLYTIC CAP. 100UF/6.3V M	126A107S
C109	CERAMIC CAP. F Z 0.022UF/50V	12F3223S
C110	CERAMIC CAP. F Z 0.022UF/50V	12F3223S
C111	ELECTROLYTIC CAP. 4.7UF/25V M NP	126V475S
C112	STACKED FILM CAP. 0.001UF/50V J or	125U102S
	MYLAR CAP. 0.001UF/50V J	2254102S
C113	CERAMIC CAP. SL J 68PF/50V	3270680S
C114	CERAMIC CAP. SL J 68PF/50V	3270680S
C115	CERAMIC CAP. SL J 18PF/50V	3270180S
C116	CERAMIC CAP. SL J 18PF/50V	3270180S
C117	STACKED FILM CAP. 0.01UF/50V J or	125U103S
	POLYESTER FILM CAP. 0.01UF/50V J	2254103S
C118	STACKED FILM CAP. 0.001UF/50V J or	125U102S
	MYLAR CAP. 0.001UF/50V J	2254102S
C120	CARBON RES. 1/6W J 1K OHM	132A102T
C121	M-CAP 92GW50V123J-5FT or	125U123S
	POLYESTER FILM CAP. 0.012UF/50V J	2254123S
C122	M-CAP 92GW50V123J-5FT or	125U123S
	POLYESTER FILM CAP. 0.012UF/50V J	2254123S
C123	STACKED FILM CAP. 0.047UF/50V J or	125U473S
	MYLAR CAP. 0.047UF/50V J	2254473S
C124	STACKED FILM CAP. 0.01UF/50V J or	125U103S
	POLYESTER FILM CAP. 0.01UF/50V J	2254103S
C126	CERAMIC CAP. SL J 22PF/50V	3270220S
C127	STACKED FILM CAP. 0.033UF/50V J or	125U333S
	MYLAR CAP. 0.033UF/50V J	2254333S
C128	ELECTROLYTIC CAP. 1UF/50V M	126F105S
C129	STACKED FILM CAP. 0.047UF/50V J or	125U473S
	MYLAR CAP. 0.047UF/50V J	2254473S
C130	ELECTROLYTIC CAP. 220UF/6.3V M	126A227S
C131	STACKED FILM CAP. 0.047UF/50V J or	125U473S

Ref.NO.	Description	Part No.
	MYLAR CAP. 0.047UF/50V J	2254473S
C132	ELECTROLYTIC CAP. 1UF/50V M	126F105S
C133	ELECTROLYTIC CAP. 47UF/6.3V M	126A476S
C134	ELECTROLYTIC CAP. 47UF/6.3V M	126A476S
C135	ELECTROLYTIC CAP. 47UF/6.3V M	126A476S
C136	ELECTROLYTIC CAP. 47UF/6.3V M	126A476S
C138	CERAMIC CAP. F Z 0.01UF/50V	32F3103S
C139	ELECTROLYTIC CAP. 100UF/25V M	126D107S
C140	ELECTROLYTIC CAP. 100UF/25V M	126D107S
C141	CERAMIC CAP. F Z 0.01UF/50V	32F3103S
C142	CERAMIC CAP. F Z 0.01UF/50V	32F3103S
C143	ELECTROLYTIC CAP. 100UF/25V M	126D107S
C144	ELECTROLYTIC CAP. 100UF/25V M	126D107S
C145	CERAMIC CAP. F Z 0.01UF/50V	32F3103S
C146	ELECTROLYTIC CAP. 100UF/25V M	126D107S
C147	CERAMIC CAP. F Z 0.01UF/50V	32F3103S
C148	ELECTROLYTIC CAP. 100UF/25V M	126D107S
C149	CERAMIC CAP. F Z 0.01UF/50V	32F3103S
C150	ELECTROLYTIC CAP. 100UF/25V M	126D107S
C151	CERAMIC CAP. F Z 0.01UF/50V	32F3103S
C152	ELECTROLYTIC CAP. 100UF/25V M	126D107S
C153	CERAMIC CAP. F Z 0.01UF/50V	32F3103S
C154	M-CAP 92GW50V224J-5FT or	125U224S
	MPF-CAP 0.22UF/50V J	122Z313S
C201	M-CAP 92GW50V683J-5FT or	125U683S
	MYLAR CAP. 0.068UF/50V J	2254683S
C202	M-CAP 92GW50V683J-5FT or	125U683S
	MYLAR CAP. 0.068UF/50V J	2254683S
C203	STACKED FILM CAP. 1UF/50V J or	125U105S
	POLYESTER FILM MMTV105J50AC	122Z321S
C206	STACKED FILM CAP. 0.18UF/50V J	125U184S
C207	ELECTROLYTIC CAP. 22UF/16V M NP	126U226S
C208	STACKED FILM CAP. 0.01UF/50V J or	125U103S
	POLYESTER FILM CAP. 0.01UF/50V J	2254103S
C209	ELECTROLYTIC CAP. 4.7UF/25V M NP	126V475S
C210	FILM CAP. 0.47UF/50V	125U474S
C211	ELECTROLYTIC CAP. 100UF/6.3V M NP	126S107S
C212	STACKED FILM CAP. 0.01UF/50V J or	125U103S
	POLYESTER FILM CAP. 0.01UF/50V J	2254103S
C214	STACKED FILM CAP. 0.01UF/50V J or	125U103S
	POLYESTER FILM CAP. 0.01UF/50V J	2254103S
C301	ELECTROLYTIC CAP. 1UF/50V M	126F105S
C302	CERAMIC CAP. F Z 0.01UF/50V	32F3103S

Ref.NO.	Description	Part No.
C303	CERAMIC CAP. SL J 22PF/50V	3270220S
C304	CERAMIC CAP. SL J 12PF/50V	3270120S
C305	CERAMIC CAP. F Z 0.01UF/50V	32F3103S
C306	CERAMIC CAP. F Z 0.01UF/50V	32F3103S
C307	CERAMIC CAP. SL J 100PF/50V	3270101S
C308	M-CAP 92GW50V222J-5FT or	125U222S
	MYLAR CAP. 0.0022UF/50V J	2254222S
C309	CERAMIC CAP. F Z 0.022UF/50V	12F3223S
C310	C-CAP 0.1UF	1220871S
C311	ELECTROLYTIC CAP. 100UF/6.3V M	126A107S
C312	C-CAP 0.1UF	1220871S
C313	ELECTROLYTIC CAP. 100UF/6.3V M	126A107S
C314	CERAMIC CAP. B K 150PF/50V	32B3151S
C315	STACKED FILM CAP. 0.1UF/50V J or	125U104S
	MYLAR CAP. 0.1UF/50V J	122Z309S
C316	STACKED FILM CAP. 0.1UF/50V J or	125U104S
	MYLAR CAP. 0.1UF/50V J	122Z309S
C318	ELECTROLYTIC CAP. 22UF/10V M	126B226S
C319	ELECTROLYTIC CAP. 47UF/6.3V M NP	126S476S
C320	ELECTROLYTIC CAP. 100UF/6.3V M	126A107S
C321	ELECTROLYTIC CAP. 100UF/6.3V M	126A107S
C322	STACKED FILM CAP. 0.001UF/50V J or	125U102S
	MYLAR CAP. 0.001UF/50V J	2254102S
C323	CERAMIC CAP. SL J 39PF/50V	3270390S
C324	CERAMIC CAP. SL J 39PF/50V	3270390S
C325	C-CAP 0.1UF	1220871S
C326	ELECTROLYTIC CAP. 100UF/6.3V M	126A107S
C327	C-CAP 0.1UF	1220871S
C328	ELECTROLYTIC CAP. 100UF/6.3V M	126A107S
C329	M-CAP 92GW50V223J-5FT or	125U223S
	MYLAR CAP. 0.022UF/50V J	2254223S
C330	STACKED FILM CAP. 0.1UF/50V J or	125U104S
	MYLAR CAP. 0.1UF/50V J	122Z309S
C331	CERAMIC CAP. F Z 0.022UF/50V	12F3223S
C332	ELECTROLYTIC CAP. 100UF/6.3V M	126A107S
C333	CERAMIC CAP. SL J 68PF/50V	3270680S
C334	CERAMIC CAP. SL J 39PF/50V	3270390S
C335	CERAMIC CAP. SL J 39PF/50V	3270390S
C336	CERAMIC CAP. SL J 39PF/50V	3270390S
C337	ELECTROLYTIC CAP. 100UF/6.3V M	126A107S
C338	CERAMIC CAP. F Z 0.022UF/50V	12F3223S
C339	CERAMIC CAP. F Z 0.022UF/50V	12F3223S
C340	CERAMIC CAP. F Z 0.022UF/50V	12F3223S
C341	ELECTROLYTIC CAP. 100UF/6.3V M	126A107S
C342	CERAMIC CAP. SL J 22PF/50V	3270220S
C343	CERAMIC CAP. SL J 100PF/50V	3270101S
C344	CERAMIC CAP. B K 180PF/50V	32B3181S
C345	ELECTROLYTIC CAP. 47UF/6.3V M NP	126S476S
C346	ELECTROLYTIC CAP. 10UF/25V M	126D106S
C347	ELECTROLYTIC CAP. 47UF/6.3V M	126A476S
C348	CERAMIC CAP. SL J 33PF/50V	3270330S
C349	CERAMIC CAP. F Z 0.022UF/50V	12F3223S
C350	ELECTROLYTIC CAP. 220UF/6.3V M	126A227S
C351	CERAMIC CAP. F Z 0.022UF/50V	12F3223S
C352	ELECTROLYTIC CAP. 100UF/16V M	126C107S
C353	ELECTROLYTIC CAP. 47UF/16V M	126C476S
C354	ELECTROLYTIC CAP. 100UF/6.3V M	126A107S
C355	ELECTROLYTIC CAP. 100UF/10V M	126B107S
C356	CERAMIC CAP. SL J 100PF/50V	3270101S
C357	ELECTROLYTIC CAP. 10UF/25V M	126D106S

Ref.NO.	Description	Part No.
C358	STACKED FILM CAP. 0.1UF/50V J or	125U104S
	MYLAR CAP. 0.1UF/50V J	122Z309S
C359	ELECTROLYTIC CAP. 1000UF/6.3V M	126A108
C360	ELECTROLYTIC CAP. 470UF/6.3V M	126A477S
C361	ELECTROLYTIC CAP. 10UF/25V M	126D106S
C362	ELECTROLYTIC CAP. 10UF/25V M	126D106S
C363	CERAMIC CAP. SL J 100PF/50V	3270101S
C364	CERAMIC CAP. CH J 12PF/50V	12CH120S
C366	CERAMIC CAP. SL J 100PF/50V	3270101S
C367	STACKED FILM CAP. 1UF/50V J or	125U105S
	POLYESTER FILM MMTV105J50AC	122Z321S
C368	CERAMIC CAP. F Z 0.022UF/50V	12F3223S
C369	CERAMIC CAP. F Z 0.022UF/50V	12F3223S
C370	CERAMIC CAP. SL J 33PF/50V	3270330S
C371	CERAMIC CAP. SL J 22PF/50V	3270220S
C374	CERAMIC CAP. SL J 22PF/50V	3270220S
C376	CERAMIC CAP. SL J 33PF/50V	3270330S
C377	CERAMIC CAP. SL J 56PF/50V	3270560S
C379	CERAMIC CAP. F Z 0.047UF/50V	12F3473S
C381	CERAMIC CAP. SL J 39PF/50V	3270390S
C382	CERAMIC CAPACITOR 6PF C-CAP SL J 6PF	3270060S
C383	CERAMIC CAP. SL J 100PF/50V	3270101S
C384	CERAMIC CAP. SL J 56PF/50V	3270560S
C385	CERAMIC CAP. SL J 56PF/50V	3270560S
C401	TF CAPACITOR 0.0027J or	125U272S
	C-CAP 92WS50V272J	2254272S
C402	M-CAP 92GW50V332J-5FT or	125U332S
	MYLAR CAP. 0.0033UF/50V J	2254332S
C403	ELECTROLYTIC CAP. 4.7UF/25V M NP	126V475S
C404	ELECTROLYTIC CAP. 1UF/50V M	126F105S
C405	ELECTROLYTIC CAP. 0.47UF/50V M NP	126X474S
C406	STACKED FILM CAP. 0.1UF/50V J or	125U104S
	MYLAR CAP. 0.1UF/50V J	122Z309S
C407	ELECTROLYTIC CAP. 22UF/16V M NP	126U226S
C409	STACKED FILM CAP. 0.1UF/50V J or	125U104S
	MYLAR CAP. 0.1UF/50V J	122Z309S
C410	ELECTROLYTIC CAP. 22UF/10V M	126B226S
C411	ELECTROLYTIC CAP. 100UF/10V M	126B107S
C412	ELECTROLYTIC CAP. 470UF/10V M	126B477S
C413	CERAMIC CAP. F Z 0.022UF/50V	12F3223S
C414	ELECTROLYTIC CAP. 100UF/6.3V M	126A107S
C415	M-CAP 92GW50V332J-5FT or	125U332S
	MYLAR CAP. 0.0033UF/50V J	2254332S
C416	CERAMIC CAP. F Z 0.022UF/50V	12F3223S
C417	ELECTROLYTIC CAP. 100UF/6.3V M	126A107S
C418	ELECTROLYTIC CAP. 47UF/16V M	126C476S
C419	TF COMPUTER 5600PF 50V or	125U562S
	MYLAR CAPACITOR	2254562S
C420	TF CAPACITOR 0.0027J or	125U272S
	C-CAP 92WS50V272J	2254272S
C421	TF CAPACITOR 0.0027J or	125U272S
	C-CAP 92WS50V272J	2254272S
C422	M-CAP 92GW50V123J-5FT or	125U123S
	POLYESTER FILM CAP. 0.012UF/50V J	2254123S
C423	M-CAP 92GW50V123J-5FT or	125U123S
	POLYESTER FILM CAP. 0.012UF/50V J	2254123S
C425	ELECTROLYTIC CAP. 33UF/16V M NP	126U336S
C426	PCB JUMPER D0.6-P5.0	JW5.0T
C427	CERAMIC CAP. F Z 0.022UF/50V	12F3223S
C428	ELECTROLYTIC CAP. 100UF/6.3V M	126A107S

Ref.NO.	Description	Part No.
C429	ELECTROLYTIC CAP. 4.7UF/50V M	126F475S
C430	ELECTROLYTIC CAP. 330UF/6.3V M	126A337S
C431	M-CAP 92GW50V223J-5FT or	125U223S
	MYLAR CAP. 0.022UF/50V J	2254223S
C432	CERAMIC CAP. CH J 100PF/50V	12CH101S
C433	CERAMIC CAP. CH J 27PF/50V	32CH270S
C434	CERAMIC CAP. CH J 15PF/50V	32CH150S
C435	CERAMIC CAP. B K 470PF/50V	32B3471S
C436	CERAMIC CAP. F Z 0.022UF/50V	12F3223S
C437	ELECTROLYTIC CAP. 330UF/6.3V M	126A337S
C438	CERAMIC CAP. SL J 39PF/50V	3270390S
C439	ELECTROLYTIC CAP. 330UF/6.3V M	126A337S
C441	CERAMIC CAP. CH J 15PF/50V	32CH150S
C442	CERAMIC CAP. F Z 0.022UF/50V	12F3223S
C443	ELECTROLYTIC CAP. 10UF/16V M	126C106S
C444	ELECTROLYTIC CAP. 1UF/50V M NP	126X105S
C445	M-CAP 92GW50V222J-5FT or	125U222S
	MYLAR CAP. 0.0022UF/50V J	2254222S
C446	ELECTROLYTIC CAP. 47UF/16V M	126C476S
C447	CERAMIC CAP. SL J 120PF/50V	3270121S
C449	CERAMIC CAP. F Z 0.022UF/50V	12F3223S
C451	STACKED FILM CAP. 0.33UF/50V J or	125U334S
	M-CAP 92WS50V334J-5F T	2254334S
C501	ELECTROLYTIC CAP. 1UF/50V M NP	126X105S
C502	CERAMIC CAP. F Z 0.022UF/50V	12F3223S
C503	NOT INDICATED AT TECHNICAL SECTION	12Z2104S
C504	CERAMIC CAP. SL J 100PF/50V	3270101S
C505	M-CAP 92GW50V123J-5FT or	125U123S
	POLYESTER FILM CAP. 0.012UF/50V J	2254123S
C506	CERAMIC CAP. F Z 0.022UF/50V	12F3223S
C507	CERAMIC CAP. SL J 82PF/50V	3270820S
C508	CERAMIC CAP. SL J 120PF/50V	3270121S
C509	ELECTROLYTIC CAP. 1UF/50V M	126F105S
C510	ELECTROLYTIC CAP. 1UF/50V M	126F105S
C511	STACKED FILM CAP. 0.0068UF/50V J or	125U682S
	MYLAR CAP. 0.0068UF/50V J	2254682S
C512	CERAMIC CAP. B K 220PF/50V	32B3221S
C513	STACKED FILM CAP. 0.01UF/50V J or	125U103S
	POLYESTER FILM CAP. 0.01UF/50V J	2254103S
C514	ELECTROLYTIC CAP. 22UF/10V M	126B226S
C515	STACKED FILM CAP. 0.01UF/50V J or	125U103S
	POLYESTER FILM CAP. 0.01UF/50V J	2254103S
C516	ELECTROLYTIC CAP. 100UF/6.3V M	126A107S
C517	ELECTROLYTIC CAP. 100UF/6.3V M	126A107S
C518	CERAMIC CAP. F Z 0.022UF/50V	12F3223S
C519	CERAMIC CAP. F Z 0.022UF/50V	12F3223S
C520	CERAMIC CAP. CH J 22PF/50V	32CH220S
C521	CERAMIC CAP. 68PF/50V (NPO)	12CH680S
C522	CERAMIC CAP. CH J 22PF/50V	32CH220S
C601	ELECTROLYTIC CAP. E-CAP 12000/25V or	122Z609
	ELECTROLYTIC CAP. E-CAP 10000/25V	126D10Z
C602	ELECTROLYTIC CAP. E-CAP 12000/25V or	122Z609
	ELECTROLYTIC CAP. E-CAP 10000/25V	126D10Z
C603	CERAMIC CAP. F Z 0.01UF/50V	32F3103S
C604	CERAMIC CAP. F Z 0.01UF/50V	32F3103S
C605	ELECTROLYTIC CAP. 470UF/10V M	126B477S
C606	ELECTROLYTIC CAP. 470UF/10V M	126B477S
C607	ELECTROLYTIC CAP.	126C10Z
C608	ELECTROLYTIC CAP.	126C10Z
C609	ELECTROLYTIC CAP. 100UF/10V M	126B107S

Ref.NO.	Description	Part No.
C610	ELECTROLYTIC CAP. 100UF/10V M	126B107S
C611	ELECTROLYTIC CAP. 100UF/10V M	126B107S
C612	ELECTROLYTIC CAP. 100UF/10V M	126B107S
C613	ELECTROLYTIC CAP. 100UF/10V M	126B107S
C614	CERAMIC CAP. F Z 0.01UF/50V	32F3103S
C615	CERAMIC CAP. F Z 0.01UF/50V	32F3103S
C616	CERAMIC CAP. F Z 0.01UF/50V	32F3103S
C617	CERAMIC CAP. F Z 0.01UF/50V	32F3103S
C618	CERAMIC CAP. F Z 0.01UF/50V	32F3103S
C619	ELECTROLYTIC CAP. 100UF/10V M	126B107S
C620	ELECTROLYTIC CAP. 100UF/10V M	126B107S
C621	CERAMIC CAP. F Z 0.022UF/50V	12F3223S
C622	ELECTROLYTIC CAP. 100UF/6.3V M	126A107S
C623	CERAMIC CAP. F Z 0.01UF/50V	32F3103S
C624	CERAMIC CAP. F Z 0.01UF/50V	32F3103S
C625	ELECTROLYTIC CAP. 470UF/50V M	126F477
C626	CERAMIC CAP. F Z 0.01UF/50V	32F3103S
C627	CERAMIC CAP. F Z 0.01UF/50V	32F3103S
C628	CERAMIC CAP. F Z 0.01UF/50V	32F3103S
C629	CERAMIC CAP. F Z 0.01UF/50V	32F3103S
C630	CERAMIC CAP. F Z 0.01UF/50V	32F3103S
C632	CERAMIC CAP. F Z 0.001UF/50V	32F3102S
C633	CERAMIC CAP. F Z 0.001UF/50V	32F3102S
C634	CERAMIC CAP. F Z 0.001UF/50V	32F3102S
C635	CERAMIC CAP. F Z 0.001UF/50V	32F3102S
C636	CERAMIC CAP. F Z 0.001UF/50V	32F3102S
C637	STACKED FILM CAP. 1UF/50V J or	125U105S
	POLYESTER FILM MMTV105J50AC	122Z321S
C639	ELECTROLYTIC CAP. 10UF/50V M	126F106S
C701	C-CAP 0.1UF	1220871S
C702	ELECTROLYTIC CAP. 100UF/25V M	126D107S
C703	C-CAP 0.1UF	1220871S
C704	CERAMIC CAP. F Z 0.022UF/50V	12F3223S
C706	ELECTROLYTIC CAP. 22UF/10V M	126B226S
C707	CERAMIC CAP. F Z 0.022UF/50V	12F3223S
C708	ELECTROLYTIC CAP. 100UF/6.3V M	126A107S
C709	CERAMIC CAP. CH J 27PF/50V	32CH270S
C710	CERAMIC CAP. CH J 27PF/50V	32CH270S
C711	CERAMIC CAP. F Z 0.022UF/50V	12F3223S
C722	CERAMIC CAP. B K 220PF/50V	32B3221S
C723	C-CAP 0.1UF or	1220871S
	DIODES	
D101	DIODE 1SS133	1SS133T
D102	DIODE 1SS133	1SS133T
D103	DIODE 1SS133	1SS133T
D104	DIODE 1SS133	1SS133T
D105	DIODE 1SS133	1SS133T
D106	DIODE 1SS133	1SS133T
D109	DIODE 1SS133	1SS133T
D201	DIODE 1SS133	1SS133T
D202	DIODE 1SS133	1SS133T
D203	ZENER DIODE MTZ62.B	MTZ6.2BT
D204	ZENER DIODE MTZ62.B	MTZ6.2BT
D205	DIODE 1SS133	1SS133T
D301	DIODE 1SS133	1SS133T
D302	DIODE 1SS133	1SS133T
D303	DIODE 1SS133	1SS133T
D304	DIODE 1SS133	1SS133T
D305	DIODE 1SS133	1SS133T
D306	DIODE 1SS133	1SS133T

Ref.NO.	Description	Part No.
D307	DIODE 1SS133	1SS133T
D308	ZENER DIODE	MTZJ9.1BT
D401	DIODE 1SS133	1SS133T
D402	DIODE 1SS133	1SS133T
D403	DIODE 1SS133	1SS133T
D501	DIODE 1SS133	1SS133T
D601	RECTIFER RERTIFIER	1SR139-100T
D602	DIODE VRIDGE 4G4B44	4G4B44
D603	DIODE VRIDGE 3G4B41	3G4B41
D604	ZENER DIODE MTZ12B	MTZ12BT
D605	ZENNER DIODE MTZ5.6B	MTZ5.6BT
D606	ZENNER DIODE MTZ5.6B	MTZ5.6BT
D607	ZENER DIODE MTZ12B	MTZ12BT
D607	DIODE 1SS133	1SS133T
D608	ZENNER DIODE MTZ5.6B	MTZ5.6BT
D609	DIODE 1SS133	1SS133T
D610	DIODE 1SS133	1SS133T
D701	ZENER DIODE MTZ9.1C	MTZ9.1CT
D707	DIODE 1SS133	1SS133T
D708	DIODE 1SS133	1SS133T
	ICS	
IC101	SERVO AMP LA9200NM	14LQ498
IC102	OP AMP NJM072L	14LO556
IC103	IC DUAL OP AMP NJM4558LD or	NJM4558LD
	IC DUAL OP AMP BA4558NDX	BA4558NDX
IC105	IC DUAL OP AMP NJM4558LD or	NJM4558LD
	IC DUAL OP AMP BA4558NDX	BA4558NDX
IC106	IC (SWITICHING) TC4053BP or	TC4053BP
	IC (SWITICHING) BU4053B or	BU4053B
	IC (SWITCHING) NJU4053BD	14D0436
IC107	IC DUAL OP AMP NJM4558LD or	NJM4558LD
	IC DUAL OP AMP BA4558NDX	BA4558NDX
IC108	TRANSISTOR ARRAY STA451C	14LO505
IC109	IC (SWITICHING) TC4053BP or	TC4053BP
	IC (SWITICHING) BU4053B or	BU4053B
	IC (SWITCHING) NJU4053BD	14D0436
IC110	IC DUAL OP AMP NJM4558LD or	NJM4558LD
	IC DUAL OP AMP BA4558NDX	BA4558NDX
IC201	IC DUAL OP AMP NJM4558LD or	NJM4558LD
	IC DUAL OP AMP BA4558NDX	BA4558NDX
IC202	IC DUAL OP AMP NJM4558LD or	NJM4558LD
	IC DUAL OP AMP BA4558NDX	BA4558NDX
IC203	IC DUAL OP AMP NJM4558LD or	NJM4558LD
	IC DUAL OP AMP BA4558NDX	BA4558NDX
IC301	FM IF AMP TA7061BP	14LW514
IC302	C TBC YM3598	GYM3598*****
IC303	C TBC YM3598	GYM3598*****
IC305	F TBC YM3567	14LO500
IC306	VIDEO FM DET. YM3558	14LO501
IC307	INVERTER 74HCU04	74HCU04
IC308	IC (SWITICHING) TC4053BP or	TC4053BP
	IC (SWITICHING) BU4053B or	BU4053B
	IC (SWITCHING) NJU4053BD	14D0436
IC309	OP AMP NJM4556L	14LO555
IC402	IC DUAL OP AMP NJM4558LD or	NJM4558LD
	IC DUAL OP AMP BA4558NDX	BA4558NDX
IC403	VIDEO SERVO PROCESSOR YM6103	14LO499
IC501	INVERTER 74HCU04	74HCU04
IC502	LASER DIODE DRIVER IR3C02A	14LO509
IC701	IC (MOTOR DRIVER)	BA6209

Ref.NO.	Description	Part No.
IC702	MICRO PROCESSOR UPD75516GF-216-3B9	GC90***NE035
IC703	IC PST-520F	14D0249
	TRANSISTORS	
Q101	TR 2SA933S-TP(Q) or	Q2SA933STPQ*
	TR 2SA933S-TP(R)	Q2SA933STPR*
Q102	TR 2SA933S-TP(Q) or	Q2SA933STPQ*
	TR 2SA933S-TP(R)	Q2SA933STPR*
Q103	TRANSISTOR 2SB953A(P) or	Q2SB953AP***
	TRANSISTOR 2SB953A(Q)	Q2SB953AQ***
Q104	TRANSISTOR 2SD1444A(P) or	Q2SD1444AP**
	TRANSISTOR 2SD1444A(Q)	Q2SD1444AQ**
Q105	TRANSISTOR 2SC1740S-TP(Q) or	Q2SC1740STPQ
	TRANSISTOR 2SC1740S-TP(R)	Q2SC1740STPR
Q106	TR 2SA933S-TP(Q) or	Q2SA933STPQ*
	TR 2SA933S-TP(R)	Q2SA933STPR*
Q109	TRANSISTOR 2SC1740S-TP(Q) or	Q2SC1740STPQ
	TRANSISTOR 2SC1740S-TP(R)	Q2SC1740STPR
Q110	TR 2SC2878-TPE2(A) or	QSC2878TPE2A
	TR 2SC2878-TPE2(B)	QSC2878TPE2B
Q111	RES. BUILT-IN TRANSISTOR DTA114ES-TP	QDTA114ESTP*
Q112	RES. BUILT-IN TRANSISTOR DTC144ES-TP	QDTC144ESTP*
Q113	RES. BUILT-IN TRANSISTOR DTA114ES-TP	QDTA114ESTP*
Q114	TR 2SC2878-TPE2(A) or	QSC2878TPE2A
	TR 2SC2878-TPE2(B)	QSC2878TPE2B
Q115	TRANSISTOR DTC114TS-TP	QDTC114TSTP*
Q201	TR 2SC2878-TPE2(A) or	QSC2878TPE2A
	TR 2SC2878-TPE2(B)	QSC2878TPE2B
Q202	RES. BUILT-IN TRANSISTOR DTA114ES-TP	QDTA114ESTP*
Q205	TR 2SA933S-TP(Q) or	Q2SA933STPQ*
	TR 2SA933S-TP(R)	Q2SA933STPR*
Q206	TR 2SC2878-TPE2(A) or	QSC2878TPE2A
	TR 2SC2878-TPE2(B)	QSC2878TPE2B
Q207	TR 2SA933S-TP(Q) or	Q2SA933STPQ*
	TR 2SA933S-TP(R)	Q2SA933STPR*
Q208	TR 2SC2878-TPE2(A) or	QSC2878TPE2A
	TR 2SC2878-TPE2(B)	QSC2878TPE2B
Q301	TRANSISTOR 2SC1740S-TP(Q) or	Q2SC1740STPQ
	TRANSISTOR 2SC1740S-TP(R)	Q2SC1740STPR
Q302	TRANSISTOR	2SC3315CDZ
Q303	TRANSISTOR 2SC1740S-TP(Q) or	Q2SC1740STPQ
	TRANSISTOR 2SC1740S-TP(R)	Q2SC1740STPR
Q304	TRANSISTOR	2SC3315CDZ
Q305	TRANSISTOR	2SC3315CDZ
Q306	TRANSISTOR 2SC1740S-TP(Q) or	Q2SC1740STPQ
	TRANSISTOR 2SC1740S-TP(R)	Q2SC1740STPR
Q307	TRANSISTOR 2SC1740S-TP(Q) or	Q2SC1740STPQ
	TRANSISTOR 2SC1740S-TP(R)	Q2SC1740STPR
Q308	TRANSISTOR	2SC3315CDZ
Q309	TRANSISTOR 2SC1740S-TP(Q) or	Q2SC1740STPQ
	TRANSISTOR 2SC1740S-TP(R)	Q2SC1740STPR
Q310	TRANSISTOR 2SC1435-AA	Q2SA1435AA**
Q311	TRANSISTOR 2SC3495-AA	Q2SC3495AA**
Q312	TR 2SA933S-TP(Q) or	Q2SA933STPQ*
	TR 2SA933S-TP(R)	Q2SA933STPR*
Q313	TR 2SA933S-TP(Q) or	Q2SA933STPQ*
	TR 2SA933S-TP(R)	Q2SA933STPR*
Q314	TR 2SA933S-TP(Q) or	Q2SA933STPQ*
	TR 2SA933S-TP(R)	Q2SA933STPR*
Q315	TRANSISTOR 2SC3495-AA	Q2SC3495AA**
Q316	TRANSISTOR 2SC3495-AA	Q2SC3495AA**

Ref.NO.	Description	Part No.
Q317	TRANSISTOR 2SC3495-AA	Q2SC3495AA**
Q318	TRANSISTOR 2SC3495-AA	Q2SC3495AA**
Q320	TRANSISTOR 2SC1740S-TP(Q) or	Q2SC1740STPQ
	TRANSISTOR 2SC1740S-TP(R)	Q2SC1740STPR
Q321	TRANSISTOR 2SC1740S-TP(Q) or	Q2SC1740STPQ
	TRANSISTOR 2SC1740S-TP(R)	Q2SC1740STPR
Q322	TRANSISTOR 2SC3495-AA	Q2SC3495AA**
Q323	TRANSISTOR 2SC1435-AA	Q2SA1435AA**
Q324	TRANSISTOR	2SC3315CDZ
Q325	TRANSISTOR	2SC3315CDZ
Q326	TRANSISTOR 2SC2060V-TL2(Q) or	QSC2060VTL2Q
	TRANSISTOR 2SC2060V-TL2(R)	QSC2060VTL2R
Q327	TRANSISTOR 2SC1740S-TP(Q) or	Q2SC1740STPQ
	TRANSISTOR 2SC1740S-TP(R)	Q2SC1740STPR
Q328	TRANSISTOR 2SC1740S-TP(Q) or	Q2SC1740STPQ
	TRANSISTOR 2SC1740S-TP(R)	Q2SC1740STPR
Q401	TR 2SA933S-TP(Q) or	Q2SA933STPQ*
	TR 2SA933S-TP(R)	Q2SA933STPR*
Q402	TR 2SC2878-TPE2(A) or	QSC2878TPE2A
	TR 2SC2878-TPE2(B)	QSC2878TPE2B
Q403	TR 2SA933S-TP(Q) or	Q2SA933STPQ*
	TR 2SA933S-TP(R)	Q2SA933STPR*
Q404	TRANSISTOR 2SC1740S-TP(Q) or	Q2SC1740STPQ
	TRANSISTOR 2SC1740S-TP(R)	Q2SC1740STPR
Q405	TRANSISTOR 2SB544-MPAE(E) or	Q2SB544MPAEE
	TRANSISTOR 2SB544-MPAE(F)	Q2SB544MPAEF
Q406	TR 2SA933S-TP(Q) or	Q2SA933STPQ*
	TR 2SA933S-TP(R)	Q2SA933STPR*
Q407	TRANSISTOR 2SC1740S-TP(Q) or	Q2SC1740STPQ
	TRANSISTOR 2SC1740S-TP(R)	Q2SC1740STPR
Q408	TR 2SA933S-TP(Q) or	Q2SA933STPQ*
	TR 2SA933S-TP(R)	Q2SA933STPR*
Q409	TR 2SA933S-TP(Q) or	Q2SA933STPQ*
	TR 2SA933S-TP(R)	Q2SA933STPR*
Q413	TR 2SA933S-TP(Q) or	Q2SA933STPQ*
	TR 2SA933S-TP(R)	Q2SA933STPR*
Q414	TRANSISTOR 2SC1740S-TP(Q) or	Q2SC1740STPQ
	TRANSISTOR 2SC1740S-TP(R)	Q2SC1740STPR
Q415	TRANSISTOR 2SC1740S-TP(Q) or	Q2SC1740STPQ
	TRANSISTOR 2SC1740S-TP(R)	Q2SC1740STPR
Q416	TR 2SA933S-TP(Q) or	Q2SA933STPQ*
	TR 2SA933S-TP(R)	Q2SA933STPR*
Q417	TRANSISTOR 2SC1740S-TP(Q) or	Q2SC1740STPQ
	TRANSISTOR 2SC1740S-TP(R)	Q2SC1740STPR
Q418	TRANSISTOR 2SC1740S-TP(Q) or	Q2SC1740STPQ
	TRANSISTOR 2SC1740S-TP(R)	Q2SC1740STPR
Q419	TRANSISTOR 2SC3315-TA(D)	Q2SC3315TAD*
Q420	TRANSISTOR 2SC1740S-TP(Q) or	Q2SC1740STPQ
	TRANSISTOR 2SC1740S-TP(R)	Q2SC1740STPR
Q421	TRANSISTOR 2SK301-TA(R)	Q2SK301TAR**
Q422	TRANSISTOR 2SK301-TA(R)	Q2SK301TAR**
Q423	TR 2SA933S-TP(Q) or	Q2SA933STPQ*
	TR 2SA933S-TP(R)	Q2SA933STPR*
Q424	TRANSISTOR 2SC1740S-TP(Q) or	Q2SC1740STPQ
	TRANSISTOR 2SC1740S-TP(R)	Q2SC1740STPR
Q425	TRANSISTOR 2SC1740S-TP(Q) or	Q2SC1740STPQ
	TRANSISTOR 2SC1740S-TP(R)	Q2SC1740STPR
Q426	TRANSISTOR 2SC1740S-TP(Q) or	Q2SC1740STPQ
	TRANSISTOR 2SC1740S-TP(R)	Q2SC1740STPR
Q501	TRANSISTOR 2SC1740S-TP(Q) or	Q2SC1740STPQ

Ref.NO.	Description	Part No.
	TRANSISTOR 2SC1740S-TP(R)	Q2SC1740STPR
Q502	TRANSISTOR 2SC1740S-TP(Q) or	Q2SC1740STPQ
	TRANSISTOR 2SC1740S-TP(R)	Q2SC1740STPR
Q503	TR 2SA933S-TP(Q) or	Q2SA933STPQ*
	TR 2SA933S-TP(R)	Q2SA933STPR*
Q504	TR 2SA933S-TP(Q) or	Q2SA933STPQ*
	TR 2SA933S-TP(R)	Q2SA933STPR*
Q505	TR 2SA933S-TP(Q) or	Q2SA933STPQ*
	TR 2SA933S-TP(R)	Q2SA933STPR*
Q601	TRANSISTOR 2SC2060V-TL2(Q) or	QSC2060VTL2Q
	TRANSISTOR 2SC2060V-TL2(R)	QSC2060VTL2R
Q602	TRANSISTOR 2SA934V-TL2(P) or	Q2SA934VTL2P
	TRANSISTOR 2SA934V-TL2(Q) or	Q2SA934VTL2Q
	TRANSISTOR 2SA934V-TL2(R)	Q2SA934VTL2R
Q603	TRANSISTOR 2SC2060V-TL2(Q) or	QSC2060VTL2Q
	TRANSISTOR 2SC2060V-TL2(R)	QSC2060VTL2R
Q604	TRANSISTOR 2SA934V-TL2(P) or	Q2SA934VTL2P
	TRANSISTOR 2SA934V-TL2(Q) or	Q2SA934VTL2Q
	TRANSISTOR 2SA934V-TL2(R)	Q2SA934VTL2R
Q605	TRANSISTOR DTC114TS-TP	QDTC114TSTP*
Q606	TRANSISTOR 2SC2060V-TL2(Q) or	QSC2060VTL2Q
	TRANSISTOR 2SC2060V-TL2(R)	QSC2060VTL2R
Q607	TRANSISTOR 2SA934V-TL2(P) or	Q2SA934VTL2P
	TRANSISTOR 2SA934V-TL2(Q) or	Q2SA934VTL2Q
	TRANSISTOR 2SA934V-TL2(R)	Q2SA934VTL2R
Q608	TRANSISTOR 2SD1913(E) or	Q2SD1913E***
	TRANSISTOR 2SD1913(F) or	Q2SD1913F***
	TRANSISTOR 2SD313(E) or	Q2SD313E****
	TRANSISTOR 2SD313(F)	Q2SD313F****
Q609	TRANSISTOR 2SD1913(E) or	Q2SD1913E***
	TRANSISTOR 2SD1913(F) or	Q2SD1913F***
	TRANSISTOR 2SD313(E) or	Q2SD313E****
	TRANSISTOR 2SD313(F)	Q2SD313F****
Q610	TRANSISTOR 2SD1913(E) or	Q2SD1913E***
	TRANSISTOR 2SD1913(F) or	Q2SD1913F***
	TRANSISTOR 2SD313(E) or	Q2SD313E****
	TRANSISTOR 2SD313(F)	Q2SD313F****
Q611	TRANSISTOR 2SB1274(E) or	Q2SB1274E***
	TRANSISTOR 2SB1274(F) or	Q2SB1274F***
	TRANSISTOR 2SB507(E) or	Q2SB507E****
	TRANSISTOR 2SB507(F)	Q2SB507F****
Q612	TRANSISTOR 2SB1274(E) or	Q2SB1274E***
	TRANSISTOR 2SB1274(F) or	Q2SB1274F***
	TRANSISTOR 2SB507(E) or	Q2SB507E****
	TRANSISTOR 2SB507(F)	Q2SB507F****
Q703	TRANSISTOR 2SC1740S-TP(Q) or	Q2SC1740STPQ
	TRANSISTOR 2SC1740S-TP(R)	Q2SC1740STPR
	RESISTORS	
R101	CARBON RES. 1/6W J 10K OHM	132A103T
R102	CARBON RES. 1/6W J 1.2K OHM	132A122T
R103	CARBON RES. 1/6W J 2.2K OHM	132A222T
R104	CARBON RES. 1/6W J 1K OHM	132A102T
R105	CARBON RES. 1/6W J 47K OHM	132A473T
R106	CARBON RES. 1/6W J 120K OHM	132A124T
R107	CARBON RES. 1/6W J 22K OHM	132A223T
R108	CARBON RES. 1/6W J 47K OHM	132A473T
R109	CARBON RES. 1/6W J 10K OHM	132A103T
R110	CARBON RES. 1/6W J 33K OHM	132A333T
R111	CARBON RES. 1/6W J 150K OHM	132A154T
R112	CARBON RES. 1/6W J 18K OHM	132A183T

Ref.NO.	Description	Part No.
R113	CARBON RES. 1/6W J 1.5K OHM	132A152T
R114	CARBON RES. 1/6W J 68K OHM	132A683T
R115	CARBON RES. 1/6W J 4.7 OHM	132A479T
R116	METAL OXIDE FILM RES. CRH200R-02J229	134B229
R117	CARBON RES. 1/6W J 100K OHM	132A104T
R118	CARBON RES. 1/6W J 100K OHM	132A104T
R119	CARBON RES. 1/6W J 100K OHM	132A104T
R120	CARBON RES. 1/6W J 100K OHM	132A104T
R121	CARBON RES. 1/6W J 47K OHM	132A473T
R122	CARBON RES. 1/6W J 47K OHM	132A473T
R123	CARBON RES. 1/6W J 100K OHM	132A104T
R124	CARBON RES. 1/6W J 100K OHM	132A104T
R125	CARBON RES. 1/6W J 56K OHM	132A563T
R126	CARBON RES. 1/6W J 560K OHM	132A564T
R127	CARBON RES. 1/6W J 120K OHM	132A124T
R128	CARBON RES. 1/6W J 100K OHM	132A104T
R129	CARBON RES. 1/5W J 100 OHM	132A101T
R130	CARBON RES. 1/6W J 100K OHM	132A104T
R131	CARBON RES. 1/6W J 100K OHM	132A104T
R132	CARBON RES. 1/6W J 100K OHM	132A104T
R133	CARBON RES. 1/6W J 150K OHM	132A154T
R134	CARBON RES. 1/6W J 100K OHM	132A104T
R135	CARBON RES. 1/6W J 2.2K OHM	132A222T
R138	CARBON RES. 1/6W J 120K OHM	132A124T
R139	CARBON RES. 1/6W J 47K OHM	132A473T
R140	CARBON RES. 1/6W J 1K OHM	132A102T
R141	CARBON RES. 1/6W J 27K OHM	132A273T
R142	CARBON RES. 1/6W J 2.7K OHM	132A272T
R143	CARBON RES. 1/6W J 47K OHM	132A473T
R144	CARBON RES. 1/6W J 390K OHM	132A394T
R145	CARBON RES. 1/6W J 43K OHM	132A433T
R146	CARBON RES. 1/5W J 100 OHM	132A101T
R148	CARBON RES. 1/6W J 39K OHM	132A393T
R149	CARBON RES. 1/6W J 68K OHM	132A683T
R150	CARBON RES. 1/6W J 82K OHM	132A823T
R151	CARBON RES. 1/6W J 47K OHM	132A473T
R152	CARBON RES. 1/6W J 180K OHM	132A184T
R153	CARBON RES. 1/4W J 100 OHM	1346101T
R154	CARBON RES. 1/5W J 100 OHM	132A101T
R155	METAL OXIDE FILM RES. CRH200R-02J229	134B229
R156	CARBON RES. 1/6W J 2.2K OHM	132A222T
R157	CARBON RES. 1/6W J 12K OHM	132A123T
R158	CARBON RES. 1/6W J 12K OHM	132A123T
R159	CARBON RES. 1/6W J 220K OHM	132A224T
R161	CARBON RES. 1/6W J 2.2K OHM	132A222T
R163	CARBON RES. 1/6W J 1K OHM	132A102T
R164	CARBON RES. 1/6W J 22K OHM	132A223T
R165	CARBON RES. 1/6W J 6.8K OHM	132A682T
R166	CARBON RES. 1/6W J 4.7K OHM	132A472T
R167	CARBON RES. 1/6W J 120K OHM	132A124T
R168	CARBON RES. 1/6W J 120K OHM	132A124T
R169	CARBON RES. 1/6W J 1K OHM	132A102T
R170	CARBON RES. 1/6W J 10K OHM	132A103T
R171	CARBON RES. 1/6W J 10K OHM	132A103T
R172	CARBON RES. 1/6W J 15K OHM	132A153T
R173	CARBON RES. 1/6W J 1.5K OHM	132A152T
R174	CARBON RES. 1/6W J 2.7K OHM	132A272T
R175	CARBON RES. 1/6W J 10K OHM	132A103T
R176	CARBON RES. 1/6W J 10K OHM	132A103T
R177	CARBON RES. 1/6W J 47K OHM	132A473T

Ref.NO.	Description	Part No.
R178	CARBON RES. 1/6W J 47 OHM	132A470T
R179	CARBON RES. 1/6W J 2.7K OHM	132A272T
R180	CARBON RES. 1/6W J 10K OHM	132A103T
R181	CARBON RES. 1/6W J 10K OHM	132A103T
R182	CARBON RES. 1/6W J 10K OHM	132A103T
R183	CARBON RES. 1/6W J 10K OHM	132A103T
R184	PCB JUMPER D0.6-P5.0	JW5.0T
R185	CARBON RES. 1/6W J 82K OHM	132A823T
R187	CARBON RES. 1/6W J 22K OHM	132A223T
R188	CARBON RES. 1/6W J 10K OHM	132A103T
R189	CARBON RES. 1/6W J 10K OHM	132A103T
R190	CARBON RES. 1/6W J 6.8K OHM	132A682T
R191	CARBON RES. 1/6W J 62K OHM	132A623T
R192	CARBON RES. 1/6W J 4.7K OHM	132A472T
R193	CARBON RES. 1/6W J 47K OHM	132A473T
R194	CARBON RES. 1/6W J 47K OHM	132A473T
R197	CARBON RES. 1/6W J 39K OHM	132A393T
R198	CARBON RES. 1/6W J 4.7K OHM	132A472T
R199	CARBON RES. 1/6W J 4.7K OHM	132A472T
R201	CARBON RES. 1/6W J 100K OHM	132A104T
R202	CARBON RES. 1/6W J 100K OHM	132A104T
R204	CARBON RES. 1/6W J 10K OHM	132A103T
R205	CARBON RES. 1/6W J 10K OHM	132A103T
R207	CARBON RES. 1/6W J 4.7K OHM	132A472T
R208	CARBON RES. 1/6W J 10K OHM	132A103T
R209	CARBON RES. 1/6W J 4.7K OHM	132A472T
R210	CARBON RES. 1/6W J 180K OHM	132A184T
R211	CARBON RES. 1/6W J 1K OHM	132A102T
R213	CARBON RES. 1/6W J 10K OHM	132A103T
R214	CARBON RES. 1/6W J 100K OHM	132A104T
R216	CARBON RES. 1/6W J 10K OHM	132A103T
R218	CARBON RES. 1/6W J 100K OHM	132A104T
R219	CARBON RES. 1/6W J 10K OHM	132A103T
R220	CARBON RES. 1/6W J 10K OHM	132A103T
R221	CARBON RES. 1/6W J 1K OHM	132A102T
R223	CARBON RES. 1/6W J 33K OHM	132A333T
R224	CARBON RES. 1/6W J 2.2M OHM	132A225T
R225	CARBON RES. 1/6W J 1K OHM	132A102T
R226	CARBON RES. 1/6W J 47K OHM	132A473T
R227	CARBON RES. 1/6W J 100K OHM	132A104T
R228	CARBON RES. 1/6W J 220 OHM	132A221T
R229	CARBON RES. 1/6W J 100K OHM	132A104T
R230	CARBON RES. 1/6W J 10K OHM	132A103T
R231	CARBON RES. 1/6W J 10K OHM	132A103T
R232	CARBON RES. 1/6W J 10K OHM	132A103T
R235	CARBON RES. 1/6W J 220K OHM	132A224T
R236	CARBON RES. 1/6W J 220K OHM	132A224T
R237	CARBON RES. 1/6W J 100K OHM	132A104T
R238	CARBON RES. 1/6W J 47K OHM	132A473T
R260	CARBON RES. 1/6W J 10K OHM	132A103T
R281	PCB JUMPER D0.6-P5.0	JW5.0T
R282	CARBON RES. 1/6W J 15K OHM	132A153T
R284	CARBON RES. 1/6W J 4.7K OHM	132A472T
R285	CARBON RES. 1/6W J 4.7K OHM	132A472T
R286	CARBON RES. 1/6W J 4.7K OHM	132A472T
R287	CARBON RES. 1/6W J 10K OHM	132A103T
R288	CARBON RES. 1/6W J 10K OHM	132A103T
R289	CARBON RES. 1/6W J 10K OHM	132A103T
R291	CARBON RES. 1/6W J 82K OHM	132A823T
R292	CARBON RES. 1/6W J 18K OHM	132A183T

Ref.NO.	Description	Part No.
R293	CARBON RES. 1/6W J 1K OHM	132A102T
R301	CARBON RES. 1/6W J 220 OHM	132A221T
R302	CARBON RES. 1/6W J 33K OHM	132A333T
R303	CARBON RES. 1/6W J 6.8K OHM	132A682T
R304	CARBON RES. 1/6W J 180 OHM	132A181T
R305	CARBON RES. 1/6W J 10K OHM	132A103T
R306	CARBON RES. 1/6W J 10K OHM	132A103T
R307	CARBON RES. 1/6W J 1.5K OHM	132A152T
R308	CARBON RES. 1/6W J 820 OHM	132A821T
R309	CARBON RES. 1/6W J 1K OHM	132A102T
R310	CARBON RES. 1/6W J 470 OHM	132A471T
R311	CARBON RES. 1/6W J 220 OHM	132A221T
R312	CARBON RES. 1/6W J 1K OHM	132A102T
R313	CARBON RES. 1/6W J 10K OHM	132A103T
R314	CARBON RES. 1/6W J 1K OHM	132A102T
R315	CARBON RES. 1/6W J 2.2K OHM	132A222T
R317	CARBON RES. 1/6W J 1.5K OHM	132A152T
R318	CARBON RES. 1/6W J 820 OHM	132A821T
R319	CARBON RES. 1/6W J 1.2K OHM	132A122T
R320	CARBON RES. 1/6W J 1K OHM	132A102T
R321	CARBON RES. 1/6W J 1K OHM	132A102T
R322	CARBON RES. 1/6W J 3.3K OHM	132A332T
R323	CARBON RES. 1/6W J 10 OHM	132A100T
R324	CARBON RES. 1/5W J 100 OHM	132A101T
R326	CARBON RES. 1/6W J 10 OHM	132A100T
R327	CARBON RES. 1/6W J 100K OHM	132A104T
R328	CARBON RES. 1/6W J 47K OHM	132A473T
R329	CARBON RES. 1/6W J 100K OHM	132A104T
R330	CARBON RES. 1/6W J 22K OHM	132A223T
R331	CARBON RES. 1/6W J 180K OHM	132A184T
R332	CARBON RES. 1/6W J 1K OHM	132A102T
R333	CARBON RES. 1/6W J 1K OHM	132A102T
R334	CARBON RES. 1/6W J 1K OHM	132A102T
R335	CARBON RES. 1/6W J 3.3K OHM	132A332T
R336	CARBON RES. 1/6W J 3.3K OHM	132A332T
R337	CARBON RES. 1/6W J 1.2K OHM	132A122T
R338	CARBON RES. 1/6W J 1.2K OHM	132A122T
R339	CARBON RES. 1/6W J 1.8K OHM	132A182T
R340	CARBON RES. 1/6W J 2.7K OHM	132A272T
R341	CARBON RES. 1/6W J 100K OHM	132A104T
R342	CARBON RES. 1/6W J 10K OHM	132A103T
R343	CARBON RES. 1/6W J 10K OHM	132A103T
R344	CARBON RES. 1/6W J 15K OHM	132A153T
R345	CARBON RES. 1/6W J 1K OHM	132A102T
R346	CARBON RES. 1/6W J 390 OHM	132A391T
R347	CARBON RES. 1/6W J 2.2K OHM	132A222T
R348	CARBON RES. 1/6W J 470 OHM	132A471T
R349	CARBON RES. 1/6W J 680 OHM	132A681T
R350	CARBON RES. 1/6W J 1K OHM	132A102T
R351	CARBON RES. 1/6W J 1K OHM	132A102T
R352	CARBON RES. 1/6W J 22 OHM	132A220T
R353	CARBON RES. 1/6W J 2.2K OHM	132A222T
R354	CARBON RES. 1/6W J 2.2K OHM	132A222T
R355	CARBON RES. 1/6W J 2.2K OHM	132A222T
R356	CARBON RES. 1/6W J 22K OHM	132A223T
R357	CARBON RES. 1/6W J 1K OHM	132A102T
R358	CARBON RES. 1/6W J 1K OHM	132A102T
R359	CARBON RES. 1/6W J 2.2K OHM	132A222T
R360	CARBON RES. 1/6W J 1K OHM	132A102T
R361	CARBON RES. 1/6W J 1K OHM	132A102T

Ref.NO.	Description	Part No.
R363	CARBON RES. 1/6W J 1K OHM	132A102T
R364	CARBON RES. 1/6W J 1K OHM	132A102T
R365	CARBON RES. 1/6W J 100K OHM	132A104T
R366	CARBON RES. 1/6W J 1K OHM	132A102T
R367	CARBON RES. 1/6W J 22K OHM	132A223T
R368	CARBON RES. 1/6W J 1K OHM	132A102T
R370	CARBON RES. 1/6W J 1K OHM	132A102T
R371	CARBON RES. 1/6W J 1K OHM	132A102T
R372	CARBON RES. 1/6W J 1K OHM	132A102T
R376	CARBON RES. 1/6W J 10K OHM	132A103T
R377	CARBON RES. 1/6W J 47K OHM	132A473T
R378	CARBON RES. 1/6W J 680 OHM	132A681T
R379	CARBON RES. 1/6W J 6.8K OHM	132A682T
R380	CARBON RES. 1/6W J 3.3K OHM	132A332T
R381	CARBON RES. 1/6W J 470 OHM	132A471T
R382	CARBON RES. 1/6W J 820 OHM	132A821T
R383	CARBON RES. 1/6W J 47K OHM	132A473T
R384	CARBON RES. 1/6W J 120 OHM	132A121T
R385	CARBON RES. 1/6W J 1K OHM	132A102T
R387	CARBON RES. 1/6W J 82 OHM	132A820T
R388	CARBON RES. 1/2J 470OHM	1338471
R389	CARBON RES. 1/6W J 1K OHM	132A102T
R390	CARBON RES. 1/6W J 220 OHM	132A221T
R391	CARBON RES. 1/5W J 100 OHM	132A101T
R392	CARBON RES. 1/6W J 1K OHM	132A102T
R393	CARBON RES. 1/6W J 100K OHM	132A104T
R395	CARBON RES. 1/6W J 22K OHM	132A223T
R401	CARBON RES. 1/6W J 220 OHM	132A221T
R402	CARBON RES. 1/6W J 56K OHM	132A563T
R403	CARBON RES. 1/6W J 680K OHM	132A684T
R404	CARBON RES. 1/6W J 270 OHM	132A271T
R405	CARBON RES. 1/6W J 3.3K OHM	132A332T
R406	CARBON RES. 1/6W J 10K OHM	132A103T
R407	CARBON RES. 1/6W J 390K OHM	132A394T
R408	CARBON RES. 1/6W J 100K OHM	132A104T
R409	CARBON RES. 1/6W J 39K OHM	132A393T
R410	CARBON RES. 1/6W J 18K OHM	132A183T
R411	CARBON RES. 1/6W J 1M OHM	132A105T
R412	CARBON RES. 1/6W J 330 OHM	132A331T
R413	CARBON RES. 1/6W J 33K OHM	132A333T
R414	CARBON RES. 1/6W J 10K OHM	132A103T
R417	CARBON RES. 1/6W J 33K OHM	132A333T
R418	CARBON RES. 1/6W J 100K OHM	132A104T
R419	CARBON RES. 1/6W J 22K OHM	132A223T
R420	CARBON RES. 1/6W J 3.3K OHM	132A332T
R421	CARBON RES. 1/6W J 470 OHM	132A471T
R422	CARBON RES. 1/6W J 3.3K OHM	132A332T
R423	CARBON RES. 1/6W J 1K OHM	132A102T
R424	CARBON RES. 1/6W J 6.8K OHM	132A682T
R425	CARBON RES. 1/6W J 12K OHM	132A123T
R426	CARBON RES. 1/6W J 3.3K OHM	132A332T
R427	CARBON RES. 1/6W J 47K OHM	132A473T
R428	CARBON RES. 1/6W J 10K OHM	132A103T
R429	CARBON RES. 1/6W J 47K OHM	132A473T
R431	CARBON RES. 1/6W J 1K OHM	132A102T
R432	CARBON RES. 1/6W J 10K OHM	132A103T
R433	CARBON RES. 1/6W J 100K OHM	132A104T
R434	CARBON RES. 1/6W J 560 OHM	132A561T
R435	CARBON RES. 1/6W J 1K OHM	132A102T
R436	CARBON RES. 1/6W J 10K OHM	132A103T

Ref.NO.	Description	Part No.
R437	CARBON RES. 1/6W J 2.2K OHM	132A222T
R438	CARBON RES. 1/6W J 220 OHM	132A221T
R439	CARBON RES. 1/6W J 1K OHM	132A102T
R440	CARBON RES. 1/6W J 2.2K OHM	132A222T
R441	CARBON RES. 1/6W J 560 OHM	132A561T
R442	CARBON RES. 1/6W J 1K OHM	132A102T
R443	CARBON RES. 1/6W J 2.2K OHM	132A222T
R444	CARBON RES. 1/6W J 10K OHM	132A103T
R445	CARBON RES. 1/6W J 220 OHM	132A221T
R446	CARBON RES. 1/6W J 1K OHM	132A102T
R447	CARBON RES. 1/6W J 3.9K OHM	132A392T
R448	CARBON RES. 1/6W J 33K OHM	132A333T
R449	CARBON RES. 1/6W J 8.2K OHM	132A822T
R450	CARBON RES. 1/6W J 1.2K OHM	132A122T
R451	CARBON RES. 1/6W J 4.7K OHM	132A472T
R452	CARBON RES. 1/6W J 4.7K OHM	132A472T
R453	CARBON RES. 1/6W J 10K OHM	132A103T
R454	CARBON RES. 1/6W J 10K OHM	132A103T
R455	CARBON RES. 1/6W J 120K OHM	132A124T
R456	CARBON RES. 1/6W J 120K OHM	132A124T
R457	CARBON RES. 1/6W J 6.8K OHM	132A682T
R458	CARBON RES. 1/6W J 220 OHM	132A221T
R459	CARBON RES. 1/6W J 680 OHM	132A681T
R460	CARBON RES. 1/6W J 10K OHM	132A103T
R461	CARBON RES. 1/6W J 8.2K OHM	132A822T
R462	CARBON RES. 1/6W J 1K OHM	132A102T
R463	CARBON RES. 1/6W J 1M OHM	132A105T
R464	CARBON RES. 1/6W J 220 OHM	132A221T
R465	CARBON RES. 1/6W J 22K OHM	132A223T
R466	CARBON RES. 1/6W J 10K OHM	132A103T
R467	CARBON RES. 1/6W J 2.7K OHM	132A272T
R468	CARBON RES. 1/6W J 5.6K OHM	132A562T
R469	CARBON RES. 1/6W J 3.3K OHM	132A332T
R470	CARBON RES. 1/6W J 1K OHM	132A102T
R471	CARBON RES. 1/6W J 22K OHM	132A223T
R472	CARBON RES. 1/6W J 1K OHM	132A102T
R473	CARBON RES. 1/6W J 220 OHM	132A221T
R474	CARBON RES. 1/6W J 1M OHM	132A105T
R475	CARBON RES. 1/6W J 10K OHM	132A103T
R476	CARBON RES. 1/6W J 10K OHM	132A103T
R477	CARBON RES. 1/6W J 2.2K OHM	132A222T
R479	CARBON RES. 1/6W J 2.7K OHM	132A272T
R480	CARBON RES. 1/6W J 2.7K OHM	132A272T
R481	CARBON RES. 1/6W J 2.2K OHM	132A222T
R483	CARBON RES. 1/6W J 2.2K OHM	132A222T
R484	CARBON RES. 1/6W J 22 OHM	132A220T
R501	CARBON RES. 1/6W J 1.5K OHM	132A152T
R502	CARBON RES. 1/6W J 6.8K OHM	132A682T
R507	CARBON RES. 1/6W J 2.2K OHM	132A222T
R508	CARBON RES. 1/6W J 1K OHM	132A102T
R509	CARBON RES. 1/6W J 2.2K OHM	132A222T
R510	CARBON RES. 1/6W J 1K OHM	132A102T
R511	CARBON RES. 1/6W J 2.2K OHM	132A222T
R512	CARBON RES. 1/6W J 330 OHM	132A331T
R513	CARBON RES. 1/6W J 470 OHM	132A471T
R514	CARBON RES. 1/6W J 10K OHM	132A103T
R515	CARBON RES. 1/6W J 1K OHM	132A102T
R516	CARBON RES. 1/6W J 330 OHM	132A331T
R517	CARBON RES. 1/6W J 10K OHM	132A103T
R518	CARBON RES. 1/6W J 10K OHM	132A103T

Ref.NO.	Description	Part No.
R519	CARBON RES. 1/6W J 10K OHM	132A103T
R520	CARBON RES. 1/6W J 10K OHM	132A103T
R521	CARBON RES. 1/6W J 2.2K OHM	132A222T
R522	CARBON RES. 1/6W J 10K OHM	132A103T
R523	CARBON RES. 1/6W J 390 OHM	132A391T
R524	CARBON RES. 1/6W J 10 OHM	132A100T
R525	CARBON RES. 1/6W J 10K OHM	132A103T
R527	CARBON RES. 1/6W J 1K OHM	132A102T
R601	CARBON RES. 1/2J 470OHM	1338471
R602	CARBON RES. 1/2J 470OHM	1338471
R603	CARBON RES. 1/6W J 4.7 OHM	132A479T
R604	CARBON RES. 1/6W J 4.7 OHM	132A479T
R605	CARBON RES. 1/6W J 6.8K OHM	132A682T
R606	CARBON RES. 1/6W J 2.2K OHM	132A222T
R607	C-RES	1338102
R608	CARBON RES. 1/6W J 330 OHM	132A331T
R609	CARBON RES. 1/6W J 330 OHM	132A331T
R610	CARBON RES. 1/6W J 1K OHM	132A102T
R611	CARBON RES. 1/6W J 2.2 OHM	132A229T
R612	CARBON RES. 1/6W J 1K OHM	132A102T
R614	CARBON RES. 1/6W J 4.7 OHM	132A479T
R615	CARBON RES. 1/6W J 470 OHM	132A471T
R616	CARBON RES. 1/6W J 22K OHM	132A223T
R617	CARBON RES. 1/6W J 10K OHM	132A103T
R619	CARBON RES. 1/6W J 22K OHM	132A223T
R701	CARBON RES. 1/6W J 4.7K OHM	132A472T
R702	CARBON RES. 1/6W J 4.7K OHM	132A472T
R703	CARBON RES. 1/6W J 10K OHM	132A103T
R704	CARBON RES. 1/6W J 100K OHM	132A104T
R705	CARBON RES. 1/6W J 10K OHM	132A103T
R706	CARBON RES. 1/6W J 10K OHM	132A103T
R707	CARBON RES. 1/6W J 10K OHM	132A103T
R708	CARBON RES. 1/6W J 10K OHM	132A103T
R710	CARBON RES. 1/6W J 10K OHM	132A103T
R711	CARBON RES. 1/6W J 4.7K OHM	132A472T
R712	CARBON RES. 1/6W J 1M OHM	132A105T
R715	PCB JUMPER D0.6-P5.0	JW5.0T
R716	CARBON RES. 1/6W J 9.1K OHM	132A912T
R717	CARBON RES. 1/6W J 9.1K OHM	132A912T
R720	CARBON RES. 1/6W J 10K OHM	132A103T
R721	CARBON RES. 1/6W J 10K OHM	132A103T
R722	CARBON RES. 1/6W J 2.2K OHM	132A222T
R723	M-RES	134B339
	MISCELLANEOUS	
A	WIRE, LEAD RED UL1007 AWG26 OS-1	0RE400075
AA	WIRE, LEAD	WX3001A6FF11
AB	WIRE, LEAD	WX3001A6FF07
AG-AH	WIRE, LEAD	WX3401A6FF24
AJ	WIRE, LEAD WHITE 250MM	WX3901A6FF25
B	WIRE, LEAD BLUE UL1007 AWG26 OS-1	0RE400076
B-3	HEAT SINK	0RM300016
B-4	METAL, EARTH	23X9361
CLOCK	STRAIGHT PIN HEADER 2P IMSA-1068-02A	1700589
CN101	FFC CONNECTOR 24P CF-124A	5700271
CN102	STRAIGHT PIN HEADER 2P 173981-2	1770258
CN103	STRAIGHT PIN HEADER, 7P 173981-7	1770263
CN105	STRAIGHT PIN HEADER, 8P 173981-8	1770264
CN106	CONNECTOR BASE, TOP 13P 1-173981-3	1700500
CN107	9P CONNECTOR(IL-G-9P-S3T2-E)	1740461
CN108	CONNECTOR BASE, 11P 11R-FJ	1700665

Ref.NO.	Description	Part No.
CN109	CONNECTOR BASE, 11P 11R-FJ	1700665
CN110	CONNECTOR BASE, 14P	1770871
CN111	WIRE ASSY 9P	JTEC000NB001
DL301	1H DELAY EFD-EN645D08A	579O061
G	WIRE, LEAD YELLOW UL1007 AWG26 OS-1	0RE400077
I	WIRE, LEAD PURPLE UL1007 AWG26 OS-1	0RE400080
J	WIRE, LEAD BROWN UL1007 AWG26 OS-1	0RE400081
JP3	WIRE ASSY 3P 140MM	WX1E8100-009
L	WIRE, LEAD RED UL1007 AWG26 OS-1	0RE400082
L-3	SCREW , B TIGHT M3X8 BIND HEAD	GBMB308
L301	MICRO INDUCTOR 56UH-K-AXT	2165560T
L302	READ INDUCTOR ELEMT100UHK	2152101T
L303	READ INDUCTOR ELEMT100UHK	2152101T
L304	MICRO INDUCTOR 22UH-K-AXT	2165220T
L305	READ INDUCTOR 270UH	2157271T
L307	READ INDUCTOR ELEMT100UHK	2152101T
L308	CARBON RES. 1/6W J 47 OHM	132A470T
L401	MICRO INDUCTOR 120UH-K-AXT	2165121T
L402	MICRO INDUCTOR 68UH-K-AXT	2165680T
L403	MICRO INDUCTOR 68UH-K-AXT	2165680T
L501	MICRO INDUCTOR 56UH-K-AXT	2165560T
L502	MICRO INDUCTOR 56UH-K-AXT	2165560T
L503	MICRO INDUCTOR 56UH-K-AXT	2165560T
M	WIRE, LEAD GRAY UL1007 AWG26 OS-1	0RE400083
N	WIRE, LEAD RED UL1007 AWG26 OS-1	0RE400075
O	WIRE, LEAD BLACK UL1007 AWG26 OS-1	0RE400084
P	WIRE, LEAD ORANGE UL1007 AWG26 OS-1	0RE400085
R	WIRE, LEAD BLACK UL1007 AWG26 OS-1	0RE400086
S	WIRE, LEAD BLACK UL1007 AWG26 OS-1	0RE400086
T	WIRE, LEAD WHITE UL1007 AWG26 OS-1	0RE400087
T301	BPF LJ20BP8.0M01-32(8M)	1813240
T302	MIX LPF	FAL505LTE001
T303	TRAP MI-9041(3.58MHZ)	1813241
TC401	TRIMMER CAP. 30PF	1280201
TP1	CONNECTOR BASE 3P(IL-G)	1740455
TP2	11P BOARD IN CONNECTOR IMSA-1068-11A	5700103
TPRF	STRAIGHT PIN HEADER, 2P IL-G- 2P-S3T2-E	1740454
U	WIRE, LEAD YELLOW UL1007 AWG26 OS-1	0RE400088
V	WIRE, LEAD BLUE UL1007 AWG26 OS-1	0RE400089
VR101	VARIABLE RESISTOR EVN-D8AA03B15	238N256
VR102	VARIABLE RESISTOR EVN-D8AA03B14	238N252
VR103	VARIABLE RESISTOR EVN-D8AA03B15	238N256
VR104	VARIABLE RESISTOR EVND7AA02B24	238N253
VR201	VARIABLE RESISTOR	238N301
VR301	VARIABLE RESISTOR EVN-D8AA03B1	238N248
VR302	VARIABLE RESISTOR 3KB EVND8AA02B33	238N250
VR401	VARIABLE RESISTOR EVN-D8AA03B1	238N248
VR501	VARIABLE RESISTOR EVN-D8AA03B53	238N251
X401	X'TAL 14.31818MHZ	1811381
X701	CERAMIC RESONATOR CSA419MG	1812708
	WIRE ASSY 6P	WX1E8100-008
	WIRE ASSY	WX1E8100-010
	2P WIRE, LEAD ASS'Y 160MM	WX1E8110-007
	WIRE, LEAD RED 200MM	WX3201A62220
	WIRE, LEAD GRAY UL1007 AWG26 OS-1	0RE400090
	WIRE, LEAD BLUE UL1007 AWG26 OS-1	0RE400105
	WIRE, LEAD YELLOW UL1007 AWG26 OS-1	0RE400107
	WIRE, LEAD PURPLE UL1007 AWG26 OS-1	0RE400110
	SENSOR PCB 1,2 20.5X33.5,20.5X31	BE8100F01004
	WIRE, LEAD ORANGE UL1007 AWG26 OS-1	0RE400091

Ref.NO.	Description	Part No.
	WIRE, LEAD PURPLE UL1007 AWG26 OS-1	0RE400092
	SOLDERING	0RZZ00001
	FLUX	0RZZ00002
	WIRE, LEAD BLACK UL1007 AWG26 OS-1	0RE400086
	WIRE, LEAD GRAY UL1007 AWG26 OS-1	0RE400090
	WIRE, LEAD ORANGE UL1007 AWG26 OS-1	0RE400091
	OP AMP NJM072L	14LO556
	CONNECTOR ASSY 11P	WX1E8002-008
	B3P CONNECTOR BASE	1730949
	LEAD CLAMPER L=47MM	1790665
	FASNER	1790722
	MAIN PCB	1614560B
	SENSOR PCB ASS'Y	ORSA 00536
	(SEE SENSOR PCB PARTS LIST)	
	MUTE PCB ASS'Y	ORSA00558
	(SEE MUTE PCB PARTS LIST)	
	CDV PCB ASS'Y	ORSA00561
	(SEE CDV PCB PARTS LIST)	
	CD PCB ASS'Y	ORSA00727
	(SEE CD PCB PARTS LIST)	

SENSOR PCB

Ref.NO.	Description	Part No.
	SENSOR PCB ASS'Y	ORSA00536
	TRANSISTORS	
Q901	RES. BUILT-IN DTC114ES-TP	QDTC114ESTP*
Q902	RES. BUILT-IN DTA114ES-TP	QDTA114ESTP*
Q903	TR 2SC2878-TPE2(A) or	QSC2878TPE2A
	TR 2SC2878-TPE2(B)	QSC2878TPE2B
	RESISTORS	
R901	CARBON RES. 1/6W J 10K OHM	132A103T
R902	CARBON RES. 1/6W J 100K OHM	132A104T
R903	CARBON RES. 1/6W J 10K OHM	132A103T
R904	CARBON RES. 1/6W J 470K OHM	132A474T
R905	CARBON RES. 1/6W J 10K OHM	132A103T
	MISCELLANEOUS	
CN901	2P BOARD IN CONNECTOR	5700094
CN902	3P BOARD IN CONNECTOR	5700093
CN903	ANGEL PIN HEADER, 3P 173979-3	1770248
	SENSOR PCB	

MUTE PCB

Ref.No.	Description	Part No.
	MUTE PCB ASS'Y	0RSA00558
	ICS	
IC950	IC DUAL OP AMP NJM4558LD or	NJM4558LD
	IC DUAL OP AMP BA4558NDX	BA4558NDX
	TRANSISTORS	
Q950	RES. BUILT-IN DTC114ES-TP	QDTC114ESTP*
Q951	TR 2SC2878-TPE2(A) or	QSC2878TPE2A
	TR 2SC2878-TPE2(B)	QSC2878TPE2B
Q952	RES. BUILT-IN DTC114ES-TP	QDTC114ESTP*
Q953	RES. BUILT-IN DTA114ES-TP	QDTA114ESTP*
	RESISTORS	
R950	CARBON RES. 1/6W J 10K OHM	132A103T
R951	CARBON RES. 1/6W J 10K OHM	132A103T
R952	CARBON RES. 1/6W J 47K OHM	132A473T

Ref.No.	Description	Part No.
	MISCELLANEOUS	
CN950	B8P CONNECTOR BASE	1730954
	WIRE, LEAD ORANGE	0RE400091
	WIRE, LEAD PURPLE	0RE400092
	MUTE PCB 35 X 23MM	BE8100F01005

CDV PCB

Ref.No.	Description	Part No.
	CDV PCB ASS'Y	0RSA00561
	CAPACITORS	
C491	TF CAPACITOR 0.0027J	125U272S
C491	C-CAP 92WS50V272J	2254272S
C492	STACKED FILM CAP. 0.0018UF/50V J	125U182S
C492	MYLAR CAP. 0.0018UF/50V J	2254182S
	DIODES	
D491	DIODE 1SS133	1SS133T
D492	DIODE 1SS133	1SS133T
D492	ZENER DIODE MTZ3.9B	MTZ3.9BT
D493	ZENER DIODE MTZ3.9B	MTZ3.9BT
	TRANSISTORS	
Q491	FET 2SK136(R)	Q2SK136R****
Q492	FET 2SJ44	Q2SJ44TL****
Q493	RES. BUILT-IN DTA114ES-TP or	QDTA114ESTP*
	RES. BUILT-IN DTC114ES-TP	QDTC114ESTP*
Q494	RES. BUILT-IN DTA114ES-TP or	QDTA114ESTP*
	RES. BUILT-IN DTC114ES-TP	QDTC114ESTP*
	RESISTORS	
R491	CARBON RES. 1/6W J 10K OHM	132A103T
R492	CARBON RES. 1/6W J 6.8K OHM	132A682T
R493	CARBON RES. 1/6W J 56K OHM	132A563T
R494	CARBON RES. 1/6W J 82K OHM	132A823T
R495	CARBON RES. 1/6W J 10K OHM	132A103T
R496	CARBON RES. 1/6W J 100K OHM	132A104T
	MISCELLANEOUS	
CN490	8P BOARD IN CONNECTOR	5700125
CN491	2P BOARD IN CONNECTOR	5700094
	WIRE, LEAD BLACK	0RE400086
	WIRE, LEAD GRAY	0RE400090
	WIRE, LEAD ORANGE	0RE400091
	OP AMP NJM072L	14LO556
	CDV PCB	BE8100F01007

LD PCB 1 AND 2

Ref.No.	Description	Part.No.
	LD PCB ASS'Y	0RSA00765
	CAPACITOR	
C810	CERAMIC CAP. F Z 0.01UF/50V	32F3103S
	TRANSISTOR	
Q810	RES. BUILT-IN DTC144ES	DTC144ES
	RESISTORS	
R810	CARBON RES. 1/6W J 150 OHM	132A151T
R811	CARBON RES. 1/6W J 150 OHM	132A151T
R812	CARBON RES. 1/6W J 22K OHM	132A223T
R813	CARBON RES. 1/6W J 10K OHM	132A103T
	MISCELLANEOUS	
LD810	LED SLR932A-7	ESLR932A7***
PS810	FHOTO TRANSISTOR PT360FJ	QPT360FJ****

Ref. No.	Description	Part No.
	WIRE, LEAD 4P 55MM	WX1E8002-007
	WIRE ASSY 3P 210MM	WX1E8100-027
	LD PCB	BE8002F01005

FG PCB

Ref.No.	Description	Part No.
	FG PCB ASS'Y	0RSA00511
	RESISTOR	
R526	CARBON RES. 1/6W J 220 OHM	132A221T
	MISCELLANEOUS	
PS501	PHOTO SENSER	1813459
S-4	LEAF SWITCH MLS-1	1624205
S-5	LEAF SWITCH MLS-1	1624205
S-6	LEAF SWITCH MLS-1	1624205
	CONNECTOR ASSY 7P	WX1E8100-005
	FG PCB	1614930

KEY CONTROL PCB

Ref. No.	Description	Part No.
	KEY CONTROL PCB AAS'Y	0RSA01097
	CAPACITORS	
C7001	CERAMIC CAP. F Z 0.022UF/50V	12F3223S
C7002	ELECTROLYTIC CAP. 100UF/6.3V M	126A107S
C7003	ELECTROLYTIC CAP. 10UF/16V M NP	126U106S
C7004	CERAMIC CAP. SL J 330PF/50V	1270331S
C7005	ELECTROLYTIC CAP. 10UF/16V M NP	126U106S
C7006	CERAMIC CAP. SL J 330PF/50V	1270331S
C7007	ELECTROLYTIC CAP. 100UF/10V M	126B107S
C7008	ELECTROLYTIC CAP. 100UF/10V M	126B107S
C7009	ELECTROLYTIC CAP. 10UF/16V M NP	126U106S
C7010	ELECTROLYTIC CAP. 10UF/16V M NP	126U106S
C7011	ELECTROLYTIC CAP. 3.3UF/25V M	126D335S
C7012	FERRITE CORE HF55BWA3.5X4.5C	LLBF***TE001
C7012	ELECTROLYTIC CAP. 1UF/50V M	126F105
C7013	FERRITE CORE HF55BWA3.5X4.5C	LLBF***TE001
C7013	ELECTROLYTIC CAP. 1UF/50V M	126F105
C7014	CERAMIC CAP. B K 0.001UF/50V	32B3102S
C7015	CERAMIC CAP. SL J 100PF/50V	3270101S
C7016	ELECTROLYTIC CAP. 22UF/10V M	126B226S
C7017	CERAMIC CAP. B K 0.001UF/50V	32B3102S
C7018	CERAMIC CAP. SL J 100PF/50V	3270101S
C7019	ELECTROLYTIC CAP. 22UF/10V M	126B226S
C7020	MYLAR CAP. 0.0033UF/50V J	2254332S
C7021	ELECTROLYTIC CAP. 1UF/50V M	126F105S
C7022	MYLAR CAP. 0.0033UF/50V J	2254332S
C7023	ELECTROLYTIC CAP. 1UF/50V M	126F105S
C7024	ELECTROLYTIC CAP. 100UF/10V M	126B107S
C7025	ELECTROLYTIC CAP. 100UF/10V M	126B107S
C7027	CERAMIC CAP. SL J 330PF/50V	1270331S
C7028	ELECTROLYTIC CAP. 100UF/10V M	126B107S
C7029	POLYESTER FILM CAP. 0.01UF/50V J	2254103S
C7030	ELECTROLYTIC CAP. 1UF/50V M	126F105S
C7031	CERAMIC CAP. F Z 0.01UF/50V	32F3103S
C7032	CERAMIC CAP. F Z 0.01UF/50V	32F3103S
C7034	ELECTROLYTIC CAP. 1000UF/16V M	126C108
C7035	ELECTROLYTIC CAP. 1000UF/16V M	126C108
C7036	ELECTROLYTIC CAP. 100UF/10V M	126B107S

Ref. No.	Description	Part No.
C7037	ELECTROLYTIC CAP. 470UF/10V M	126B477S
C7038	ELECTROLYTIC CAP. 100UF/10V M	126B107S
C7039	ELECTROLYTIC CAP. 470UF/10V M	126B477S
C7040	CERAMIC CAP. F Z 0.01UF/50V	32F3103S
C7041	ELECTROLYTIC CAP. 100UF/6.3V M	126A107S
C7050	ELECTROLYTIC CAP. 100UF/10V M	126B107S
	DIODES	
D7001	DIODE 1SS133	1SS133T
D7002	RERTIFIER 1SR139-100 or	1SR139-100T
	DIODE	1SR35-100AT
D7003	RERTIFIER 1SR139-100 or	1SR139-100T
	DIODE	1SR35-100AT
D7004	RERTIFIER 1SR139-100 or	1SR139-100T
	DIODE	1SR35-100AT
D7005	RERTIFIER 1SR139-100 or	1SR139-100T
	DIODE	1SR35-100AT
D7006	ZENER DIODE	MTZJ8.2AT
D7007	ZENER DIODE	MTZJ8.2AT
D7008	DIODE 1SS133	1SS133T
D7009	DIODE 1SS133	1SS133T
D7010	DIODE 1SS133	1SS133T
	ICS	
IC7002	IC Dual OP AMP NJM4558LD or	NJM4558LD
	IC Dual OP AMP BA4558NDX	BA4558NDX
IC7003	IC Dual OP AMP NJM4558LD or	NJM4558LD
	IC Dual OP AMP BA4558NDX	BA4558NDX
IC7004	IC Dual OP AMP NJM4558LD or	NJM4558LD
	IC Dual OP AMP BA4558NDX	BA4558NDX
	TRANSISTORS	
Q7001	TR 2SA933S-TP(R) or	Q2SA933STPR*
	TR 2SA933S-TP(Q)	Q2SA933STPQ*
Q7002	TR 2SC2878-TPE2(A) or	QSC2878TPE2A
	TR 2SC2878-TPE2(B)	QSC2878TPE2B
Q7003	TRANSISTOR 2SC1740S-TP(Q) or	Q2SC1740STPQ
	TRANSISTOR 2SC1740S-TP(R)	Q2SC1740STPR
Q7004	TRANSISTOR 2SA934V-TL2(Q) or	Q2SA934VTL2Q
	TRANSISTOR 2SA934V-TL2(R)	Q2SA934VTL2R
Q7005	TR 2SA933S-TP(R) or	Q2SA933STPR*
	TR 2SA933S-TP(Q)	Q2SA933STPQ*
Q7006	TRANSISTOR 2SC2060V-TL2(Q) or	QSC2060VTL2Q
	TRANSISTOR 2SC2060V-TL2(R)	QSC2060VTL2R
Q7007	TRANSISTOR 2SC2060V-TL2(Q) or	QSC2060VTL2Q
	TRANSISTOR 2SC2060V-TL2(R)	QSC2060VTL2R
Q7008	TRANSISTOR 2SA934V-TL2(Q) or	Q2SA934VTL2Q
	TRANSISTOR 2SA934V-TL2(R)	Q2SA934VTL2R
	RESISTORS	
R7012	CARBON RES. 1/6W J 10K OHM	132A103T
R7013	CARBON RES. 1/6W J 10K OHM	132A103T
R7014	CARBON RES. 1/6W J 10K OHM	132A103T
R7015	CARBON RES. 1/6W J 10K OHM	132A103T
R7018	CARBON RES. 1/6W J 100K OHM	132A104T
R7020	CARBON RES. 1/6W J 100K OHM	132A104T
R7022	CARBON RES. 1/6W J 10K OHM	132A103T
R7023	CARBON RES. 1/6W J 8.2K OHM	132A822T
R7024	CARBON RES. 1/6W J 10K OHM	132A103
R7025	CARBON RES. 1/6W J 8.2K OHM	132A822T
R7026	CARBON RES. 1/6W J 10K OHM	132A103T
R7027	CARBON RES. 1/6W J 10K OHM	132A103T
R7028	CARBON RES. 1/6W J 100K OHM	132A104T

Ref. No.	Description	Part No.
R7029	CARBON RES. 1/6W J 10K OHM	132A103T
R7030	CARBON RES. 1/6W J 100K OHM	132A104T
R7031	CARBON RES. 1/6W J 10K OHM	132A103T
R7032	CARBON RES. 1/6W J 120 OHM	132A121T
R7033	CARBON RES. 1/6W J 4.7K OHM	132A472T
R7034	CARBON RES. 1/6W J 120 OHM	132A121T
R7035	CARBON RES. 1/6W J 4.7K OHM	132A472T
R7036	CARBON RES. 1/6W J 150 OHM	132A151T
R7037	CARBON RES. 1/6W J 56K OHM	132A563T
R7038	CARBON RES. 1/6W J 150 OHM	132A151T
R7039	CARBON RES. 1/6W J 100K OHM	132A104T
R7040	CARBON RES. 1/6W J 10K OHM	132A103T
R7041	CARBON RES. 1/6W J 2.7K OHM	132A272T
R7042	CARBON RES. 1/6W J 6.8K OHM	132A682T
R7043	CARBON RES. 1/6W J 68K OHM	132A683T
R7044	CARBON RES. 1/6W J 100K OHM	132A104T
R7046	CARBON RES. 1/6W J 10K OHM	132A103T
R7047	CARBON RES. 1/6W J 10K OHM	132A103T
R7048	CARBON RES. 1/6W J 10K OHM	132A103T
R7049	CARBON RES. 1/6W J 1K OHM	132A102T
R7050	CARBON RES. 1/6W J 2.2K OHM	132A222T
R7051	CARBON RES. 1/6W J 1K OHM	132A102T
R7052	CARBON RES. 1/6W J 560 OHM	132A561T
R7053	CARBON RES. 1/6W J 2.2 OHM	132A229T
R7054	CARBON RES. 1/6W J 120 OHM	132A121T
R7055	CARBON RES. 1/6W J 560 OHM	132A561T
R7056	CARBON RES. 1/6W J 2.2 OHM	132A229T
R7057	CARBON RES. 1/6W J 120 OHM	132A121T
R7058	CARBON RES. 1/6W J 10K OHM	132A103T
R7059	CARBON RES. 1/6W J 10K OHM	132A103T
	MISCELLANEOUS	
A	WIRE, LEAD BLACK 50MM	WX3001A6FF05
A	PCB JUMPER D0.6-P5.0	JW5.0T
B	WIRE, LEAD BLACK 100MM	WX3001A6FF10 C
CA7008	5P WIRE, LEAD ASS'Y 300MM	WX1E8110-006
B	CARBON RES. 1/6W J 8.2K OHM	132A822T
B-4	METAL EARTH	23X9361
CN7001	STRAIGHT PIN HEADER 6P	1770262
CN7002	STRAIGHT PIN HEADER, 9P	1770265
CN7003	CONNECTOR BASE, TOP 14P	1700501
CN7004	STRAIGHT PIN HEADER, 4P	1740766
CN7005	STRAIGHT PIN HEADER, 9P	1770265
CN7006	STRAIGHT PIN HEADER, 8P	1770264
CN7007	STRAIGHT PIN HEADER 3P	1770259
CN7008	STRAIGHT PIN HEADER 5P	1770261
CN7009	STRAIGHT PIN HEADER, 2P	1740454
D	WIRE, LEAD BROWN 90MM	WX3101A62209
J7011	CARBON RES. 1/6W J 10K OHM	132A103
X7001	CERAMIC RESONATOR EFO-GC4194A4	1813140
	RUBBER TUBE 1mm	0RZZ00028
	STRAIGHT PIN HEADER, 2P	1740764
	MICRO PROCESSOR, FOR KEY CON-TROL	UPD75104CW-237
	MICRO PROCESSOR, FOR KEY CON-TROL	UPD75P104CW
	CARBON RES. 1/6W J 8.2K OHM	132A822T
	KEY CONTROL PCB	BE8110F01003

AUDIO PCB

Ref.No.	Description	Part No.
	AUDIO PCB ASSY	
	CAPACITORS	
C 1002	ELECTROLYTIC CAP. 470UF/10V M	126B477S
C 1003	ELECTROLYTIC CAP. 1UF/50V M	126F105S
C 1008	ELECTROLYTIC CAP. 220UF/10V M	126B227S
C 1009	ELECTROLYTIC CAP. 220UF/10V M	126B227S
C 1010	ELECTROLYTIC CAP. 220UF/10V M	126B227S
C 1011	ELECTROLYTIC CAP. 220UF/10V M	126B227S
C 1012	ELECTROLYTIC CAP. 100UF/10V M	126B107S
C 1013	ELECTROLYTIC CAP. 100UF/10V M	126B107S
C 1101	ELECTROLYTIC CAP. 47UF/6.3V M	126A476S
C 1103	CERAMIC CAP. F Z 0.01UF/50V	32F3103S
C 1103	CHIP CERAMIC CAP. F Z 0.01UF/50V	12F3103C
C 1104	CHIP CERAMIC CAP. B K 0.033UF/50V	12B3333C
C 1105	CERAMIC CAP. F Z 0.01UF/50V	32F3103S
C 1105	CHIP CERAMIC CAP. F Z 0.01UF/50V	12F3103C
C 1201	M-CAP 92GW50V332J-5FT	125U332S
C 1201	MYLAR CAP. 0.0033UF/50V J	2254332S
C 1202	M-CAP 92GW50V332J-5FT	125U332S
C 1202	MYLAR CAP. 0.0033UF/50V J	2254332S
C 1203	ELECTROLYTIC CAP. 10UF/25V M	126D106S
C 1204	ELECTROLYTIC CAP. 10UF/25V M	126D106S
C 1205	STACKED FILM CAP. 0.0068UF/50V J	125U682S
C 1205	MYLAR CAP. 0.0068UF/50V J	2254682S
C 1206	M-CAP 92WS50V152J	2254152S
C 1206	M-CAP 92GW50V152J-5FT	125U152S
C 1207	M-CAP 92GW50V683J-5FT	125U683S
C 1207	MYLAR CAP. 0.068UF/50V J	2254683S
C 1208	M-CAP 92WS50V152J	2254152S
C 1208	M-CAP 92GW50V152J-5FT	125U152S
C 1209	STACKED FILM CAP. 0.0068UF/50V J	125U682S
C 1209	MYLAR CAP. 0.0068UF/50V J	2254682S
C 1210	M-CAP 92GW50V683J-5FT	125U683S
C 1210	MYLAR CAP. 0.068UF/50V J	2254683S
C 1218	ELECTROLYTIC CAP. 470UF/6.3V M	126A477S
C 1223	ELECTROLYTIC CAP. 330UF/6.3V M	126A337S
C 1225	CHIP CERAMIC CAP. CH J 82PF/50V	12CH820C
C 1226	CHIP CERAMIC CAP. CH J 82PF/50V	12CH820C
C 1227	CHIP CERAMIC CAP. CH J 68PF/50V	12CH680C
C 1230	CHIP CERAMIC CAP. F Z 0.01UF/50V	12F3103C
C 1231	CHIP CERAMIC CAP. F Z 0.01UF/50V	12F3103C
C 1232	CHIP CERAMIC CAP. B K 0.047UF/50V	12B3473C
C 1334	CHIP CERAMIC CAP. CH J 68PF/50V	12CH680C
C 1335	CHIP CERAMIC CAP. CH J 68PF/50V	12CH680C
C 1336	ELECTROLYTIC CAP. 100UF/6.3V M	126A107S
C 1337	CHIP CERAMIC CAP. F Z 0.01UF/50V	12F3103C
C 1338	ELECTROLYTIC CAP. 1UF/50V M NP	126X105S
C 1339	ELECTROLYTIC CAP. 3.3UF/50V M	126F335S
C 1340	ELECTROLYTIC CAP. 100UF/6.3V M	126A107S
C 1341	CHIP CERAMIC CAP. F Z 0.01UF/50V	12F3103C
C 1342	CHIP CERAMIC CAP. CH J 82PF/50V	12CH820C
C 1343	CHIP CERAMIC CAP. CH J 330PF/50V	12CH331C
C 1344	CHIP CERAMIC CAP. B K 0.01UF/50V	12B3103C
C 1345	CHIP CERAMIC CAP. CH J 22PF/50V	12CH220C
C 1401	CHIP CERAMIC CAP. B K 0.047UF/50V	12B3473C
C 1402	STACKED FILM CAP. 0.39UF/50V J	125U394S
C 1402	POLYESTOR FILM CAPACITOR	122Z316S
C 1403	CHIP CERAMIC CAP. B K 0.0068UF/50V	12B3682C

Ref.No.	Description	Part No.
C 1417	CHIP CERAMIC CAP. F Z 0.01UF/50V	12F3103C
C 1418	CHIP CERAMIC CAP. F Z 0.01UF/50V	12F3103C
C 1419	CHIP CERAMIC CAP. F Z 0.01UF/50V	12F3103C
C 1420	CHIP CERAMIC CAP. B K 0.01UF/50V	12B3103C
C 1427	ELECTROLYTIC CAP. 2.2UF/50V M	126F225S
C 1428	ELECTROLYTIC CAP. 2.2UF/16V M NP	126U225S
C 1430	CHIP C-CAP CH50V121J-T	12CH121C
C 1432	FILM CAP. 0.47UF/50V	125U474S
C 1432	POLYESTOR FILM CAP . (J)0.47UF/50V	122Z317S
C 2000	CHIP CERAMIC CAP. B K 0.0068UF/50V	12B3682C
C 2001	ELECTROLYTIC CAP. 47UF/6.3V M	126A476S
C 2002	M-CAP 92GW50V183J-5FT	125U183S
C 2002	POLYESTOR FILM CAPACITOR .018U	122Z183S
C 2002	POLYESTER FILM CAP. 0.018UF/50V J	2254183S
C 2003	STACKED FILM CAP. 0.24UF/50V J	125U244S
C 2003	POLYESTER FILM CAP. 0.24UF/50V J	2254244S
C 2004	CHIP CERAMIC CAP. CH J 560PF/50V	12CH561C
C 2005	ELECTROLYTIC CAP. 100UF/6.3V M	126A107S
C 2006	ELECTROLYTIC CAP. 100UF/6.3V M	126A107S
C 2007	ELECTROLYTIC CAP. 4.7UF/25V M	126D475S
C 2008	ELECTROLYTIC CAP. 4.7UF/25V M	126D475S
C 2009	NOT INDICATED AT TECHNICAL SECTION	12Z2104S
C 2010	CHIP CERAMIC CAP. B K 0.001UF/50V	12B3102C
C 2011	CHIP CERAMIC CAP. B K 0.001UF/50V	12B3102C
C 2014	CHIP CERAMIC CAP. CH J 100PF/50V	12CH101C
C 2015	CHIP CERAMIC CAP. F Z 0.01UF/50V	12F3103C
C 2100	CHIP CERAMIC CAP. F Z 0.01UF/50V	12F3103C
C 2101	CHIP CERAMIC CAP. F Z 0.01UF/50V	12F3103C
C 2102	CHIP CERAMIC CAP. F Z 0.01UF/50V	12F3103C
C 2103	CHIP CERAMIC CAP. F Z 0.01UF/50V	12F3103C
C 2104	CHIP CERAMIC CAP. F Z 0.01UF/50V	12F3103C
C 2105	CHIP CERAMIC CAP. F Z 0.01UF/50V	12F3103C
C 2106	CHIP CERAMIC CAP. F Z 0.022UF/50V	12F3223C
C 2501	CHIP CERAMIC CAP. B K 330PF/50V	12B3331C
C 2502	CHIP CERAMIC CAP. B K 330PF/50V	12B3331C
C 2503	CHIP CERAMIC CAP. F Z 0.01UF/50V	12F3103C
C 2504	CHIP CERAMIC CAP. F Z 0.01UF/50V	12F3103C
C 2505	ELECTROLYTIC CAP. 10UF/16V M NP	126U106S
C 2506	ELECTROLYTIC CAP. 10UF/16V M NP	126U106S
C 2507	M-CAP 92GW50V332J-5FT	125U332S
C 2507	MYLAR CAP. 0.0033UF/50V J	2254332S
C 2508	M-CAP 92GW50V332J-5FT	125U332S
C 2508	MYLAR CAP. 0.0033UF/50V J	2254332S
C 2509	CHIP CERAMIC CAP. F Z 0.1UF/50V	12F3104C
C 2509	ELECTROLYTIC CAP. 0.1UF/50V M	126F104S
C 2510	ELECTROLYTIC CAP. 100UF/10V M	126B107S
C 2511	M-CAP 92GW50V332J-5FT	125U332S
C 2511	MYLAR CAP. 0.0033UF/50V J	2254332S
C 2512	CHIP CERAMIC CAP. F Z 0.01UF/50V	12F3103C
C 2513	CHIP CERAMIC CAP. F Z 0.01UF/50V	12F3103C
C 2514	CHIP CERAMIC CAP. F Z 0.01UF/50V	12F3103C
C 2516	CHIP CERAMIC CAP. F Z 0.01UF/50V	12F3103C
C 2517	CHIP CERAMIC CAP. F Z 0.01UF/50V	12F3103C
C 2518	ELECTROLYTIC CAP. 100UF/6.3V M	126A107S
C 2519	CHIP CERAMIC CAP. F Z 0.01UF/50V	72F3103C
C 2520	CHIP CERAMIC CAP. CH J 68PF/50V	12CH680C
C 2521	CHIP CERAMIC CAP. CH J 68PF/50V	12CH680C
C 2522	CHIP CERAMIC CAP. CH J 22PF/50V	12CH220C
C 2523	ELECTROLYTIC CAP. 10UF/35V M	126E106S
C 2524	CHIP CERAMIC CAP. CH J 22PF/50V	12CH220C

Ref.No.	Description	Part No.
C 2525	CHIP CERAMIC CAP. CH J 68PF/50V	12CH680C
C 2526	CHIP CERAMIC CAP. CH J 68PF/50V	12CH680C
C 2527	CHIP CERAMIC CAP. CH J 22PF/50V	12CH220C
C 2528	ELECTROLYTIC CAP. 10UF/35V M	126E106S
C 2529	CHIP CERAMIC CAP. CH J 22PF/50V	12CH220C
C 2530	ELECTROLYTIC CAP. 100UF/10V M	126B107S
C 2531	CHIP CERAMIC CAP. F Z 0.01UF/50V	12F3103C
C 2532	CHIP CERAMIC CAP. F Z 0.1UF/50V	12F3104C
C 2533	ELECTROLYTIC CAP. 100UF/6.3V M	126A107S
C 2534	CHIP CERAMIC CAP. F Z 0.01UF/50V	12F3103C
C 2535	CHIP CERAMIC CAP. F Z 0.01UF/50V	12F3103C
C 2536	ELECTROLYTIC CAP. 100UF/6.3V M	126A107S
C 2537	ELECTROLYTIC CAP. 100UF/6.3V M	126A107S
C 2538	CHIP CERAMIC CAP. F Z 0.01UF/50V	12F3103C
C 2539	ELECTROLYTIC CAP. 100UF/6.3V M	126A107S
C 2540	CHIP CERAMIC CAP. F Z 0.01UF/50V	12F3103C
C 2541	CHIP CERAMIC CAP. F Z 0.01UF/50V	12F3103C
C 2542	ELECTROLYTIC CAP. 100UF/6.3V M	126A107S
C 2543	CHIP CERAMIC CAP. F Z 0.01UF/50V	12F3103C
C 2544	CHIP CERAMIC CAP. F Z 0.01UF/50V	12F3103C
C 3001	STACKED FILM CAP. 0.047UF/50V J	125U473S
C 3001	MYLAR CAP. 0.047UF/50V J	2254473S
C 3002	ELECTROLYTIC CAP. 470UF/6.3V M	126A477S
C 3003	CHIP CRRAMIC CAP. CH J 15PF/50V	12CH150C
C 3004	ELECTROLYTIC CAP. 220UF/6.3V M	126A227S
C 3005	CHIP CERAMIC CAP. CH J 220PF/50V	12CH221C
C 3006	ELECTROLYTIC CAP. 22UF/10V M	126B226S
C 3007	CHIP CERAMIC CAP. B K 0.001UF/50V	12B3102C
C 3008	CHIP CERAMIC CAP. B K 0.0047UF/50V	12B3472C
C 3009	CHIP C-CAP CH50V560J-T	12CH560C
C 3010	CHIP CERAMIC CAP. B K 0.0015UF/50V	12B3152C
C 3011	CHIP CERAMIC CAP. CH J 220PF/50V	12CH221C
C 3012	ELECTROLYTIC CAP. 10UF/16V M NP	126U106S
C 3013	M-CAP 92GW50V822J-5FT	125U822S
C 3013	MYLAR CAP. 0.0082UF/50V J	2254822S
C 3014	STACKED FILM CAP. 0.047UF/50V J	125U473S
C 3014	MYLAR CAP. 0.047UF/50V J	2254473S
C 3015	ELECTROLYTIC CAP. 0.47UF/50V M	126F474S
C 3016	ELECTROLYTIC CAP. 220UF/6.3V M	126A227S
C 3017	ELECTROLYTIC CAP. 4.7UF/25V M	126D475S
C 3018	CHIP CERAMIC CAP. B K 0.001UF/50V	12B3102C
C 3019	STACKED FILM CAP. 0.1UF/50V J	125U104S
C 3019	MYLAR CAP. 0.1UF/50V J	2254104S
C 3020	STACKED FILM CAP. 0.1UF/50V J	125U104S
C 3020	MYLAR CAP. 0.1UF/50V J	2254104S
C 3021	CHIP CERAMIC CAP. B K 0.001UF/50V	12B3102C
C 3022	ELECTROLYTIC CAP. 22UF/16V M NP	126U226S
C 3023	STACKED FILM CAP. 0.1UF/50V J	125U104S
C 3023	MYLAR CAP. 0.1UF/50V J	2254104S
C 3024	ELECTROLYTIC CAP. 220UF/6.3V M	126A227S
C 3025	M-CAP 92GW50V822J-5FT	125U822S
C 3025	MYLAR CAP. 0.0082UF/50V J	2254822S
C 3026	ELECTROLYTIC CAP. 10UF/16V M NP	126U106S
C 3027	CHIP CERAMIC CAP. CH J 220PF/50V	12CH221C
C 3028	CHIP C-CAP CH50V560J-T	12CH560C
C 3029	CHIP CERAMIC CAP. B K 0.0015UF/50V	12B3152C
C 3030	CHIP CERAMIC CAP. B K 0.0047UF/50V	12B3472C
C 3031	CHIP CERAMIC CAP. B K 0.001UF/50V	12B3102C
C 3032	ELECTROLYTIC CAP. 22UF/10V M	126B226S
C 3033	CHIP CERAMIC CAP. CH J 220PF/50V	12CH221C

Ref.No.	Description	Part No.
C 3034	CHIP CRRAMIC CAP. CH J 18PF/50V	12CH180C
C 3035	ELECTROLYTIC CAP. 220UF/6.3V M	126A227S
C 3036	ELECTROLYTIC CAP. 470UF/6.3V M	126A477S
C 3037	CHIP CERAMIC CAP. B K 0.001UF/50V	12B3102C
C 3038	STACKED FILM CAP. 0.047UF/50V J	125U473S
C 3038	MYLAR CAP. 0.047UF/50V J	2254473S
C 3039	STACKED FILM CAP. 0.047UF/50V J	125U473S
C 3039	MYLAR CAP. 0.047UF/50V J	2254473S
C 4001	C-CAP 92WS50V272J	2254272S
C 4002	C-CAP 92WS50V272J	2254272S
C 4003	ELECTROLYTIC CAP. 100UF/10V M	126B107S
C 4004	ELECTROLYTIC CAP. 10UF/16V M NP	126U106S
C 4005	ELECTROLYTIC CAP. 10UF/16V M NP	126U106S
C 4006	ELECTROLYTIC CAP. 100UF/10V M	126B107S
C 4007	ELECTROLYTIC CAP. 10UF/16V M NP	126U106S
C 4008	ELECTROLYTIC CAP. 10UF/16V M NP	126U106S
C 4011	ELECTROLYTIC CAP. 10UF/16V M	126C106S
C 4012	ELECTROLYTIC CAP. 2.2UF/16V M	126C225S
C 4013	CHIP CERAMIC CAP. B K 220PF/50V	12B3221C
C 4016	CHIP CERAMIC CAP. F Z 0.01UF/50V	12F3103C
C 4017	CHIP CERAMIC CAP. F Z 0.01UF/50V	12F3103C
C 4100	CHIP CERAMIC CAP. B K 0.001UF/50V	12B3102C
C 4102	CHIP CERAMIC CAP. B K 0.001UF/50V	12B3102C
C 5001	CHIP CERAMIC CAP. F Z 0.01UF/50V	12F3103C
C 5002	CHIP CERAMIC CAP. F Z 0.01UF/50V	12F3103C
C 5003	ELECTROLYTIC CAP. 1000UF/16V M	126C108
C 5004	CHIP CRRAMIC CAP. CH J 18PF/50V	12CH180C
C 5005	CHIP CERAMIC CAP. F Z 0.01UF/50V	12F3103C
C 5007	ELECTROLYTIC CAP. 3.3UF/50V M	126F335S
C 5008	ELECTROLYTIC CAP. 4.7UF/25V M	126D475S
C 5009	ELECTROLYTIC CAP. 47UF/16V M NP	126U476S
C 5010	ELECTROLYTIC CAP. 100UF/10V M	126B107S
C 5011	ELECTROLYTIC CAP. 100UF/10V M	126B107S
C 5014	CHIP CERAMIC CAP. B K 220PF/50V	12B3221C
C 5014	CHIP CERAMIC CAP. CH J 220PF/50V	12CH221C
C 5015	CHIP CERAMIC CAP. F Z 0.01UF/50V	12F3103C
C 5102	CHIP CERAMIC CAP. B K 330PF/50V	12B3331C
C 5103	CHIP CERAMIC CAP. B K 270PF/50V	12B3271C
C 5106	CHIP CERAMIC CAP. F Z 0.01UF/50V	12F3103C
C 5107	CHIP CERAMIC CAP. B K 0.01UF/50V	12B3103C
C 5108	CHIP CERAMIC CAP. B K 0.01UF/50V	12B3103C
C 5109	CHIP CERAMIC CAP. B K 0.01UF/50V	12B3103C
C 5110	CHIP CERAMIC CAP. B K 0.01UF/50V	12B3103C
C 5111	CHIP CERAMIC CAP. CH J 47PF/50V	12CH470C
C 5112	CHIP CERAMIC CAP. F Z 0.01UF/50V	12F3103C
C 5113	CHIP CERAMIC CAP. F Z 0.01UF/50V	12F3103C
C 5114	ELECTROLYTIC CAP. 47UF/16V M	126C476S
C 5115	CHIP CERAMIC CAP. F Z 0.01UF/50V	12F3103C
C 5116	CHIP CERAMIC CAP. F Z 0.01UF/50V	12F3103C
C 5117	CHIP CERAMIC CAP. F Z 0.01UF/50V	12F3103C
C 5118	CHIP CERAMIC CAP. F Z 0.01UF/50V	12F3103C
	DIODES	
D 1001	DIODE 1SS133	1SS133T
D 1002	ZENOR DIODE	MTZ8.2AT
D 1003	DIODE 1SS133	1SS133T
D 1201	VARIABLE CAP	SVC211
D 1203	ZENNER DIODE MTZ5.6B	MTZ5.6BT
D 1301	DIODE 1SS133	1SS133T
D 1302	DIODE 1SS133	1SS133T
D 1401	DIODE 1SS133	1SS133T

Ref.No.	Description	Part No.
D 2001	DIODE 1SS133	1SS133T
D 2501	DIODE 1SS133	1SS133T
D 2502	DIODE 1SS133	1SS133T
D 2503	DIODE 1SS133	1SS133T
D 2504	DIODE 1SS133	1SS133T
D 2505	DIODE 1SS133	1SS133T
D 2506	DIODE 1SS133	1SS133T
D 4001	DIODE 1SS133	1SS133T
D 4002	DIODE 1SS133	1SS133T
D 4003	DIODE 1SS133	1SS133T
D 4004	DIODE 1SS133	1SS133T
D 4005	DIODE 1SS133	1SS133T
D 4006	DIODE 1SS133	1SS133T
	ICS	
IC1201	IC NJM4558M	GNJM4558M***
IC1201	IC BA4558F	GBA4558F****
IC1403	IC NJM4558M	GNJM4558M***
IC1403	IC BA4558F	GBA4558F****
IC1404	IC NJM2043M	GNJM2043M***
IC1405	IC NJU4053BM	GNJU4053BM**
IC1405	IC BU4053BF	GBU4053BF***
IC2001	IC YM7121B	GYM7121B****
IC2500	IC YSS205	GYSS205*****
IC2501	RAM	GC51832SPL10
IC2503	IC NJM4558M	GNJM4558M***
IC2503	IC BA4558F	GBA4558F****
IC2504	IC YM3433	GYM3433*****
IC2505	D/A CONVERTER SM5860BF	GSM5860BF***
IC2506	IC, FLAT PACKAGE OP AMP M5238FP	GM5238FP****
IC2506	IC, FLAT PACKAGE OP AMP NJM5532M	GNJM5532M000
IC2507	IC NJU4053BM	GNJU4053BM**
IC2507	IC BU4053BF	GBU4053BF***
IC3001	IC HA12127ANT	GHA12127ANT*
IC4002	IC NJM4558M	GNJM4558M***
IC4002	IC BA4558F	GBA4558F****
	TRANSISTORS	
Q 1005	CHIP TRANSISTOR 2SA1037K(R)	2SA1037KRZ
Q 1006	TR 2SC2412K(Q)(R)	2SC2412KQRZ
Q 1010	CHIP TR. DTC114YK	QDTC114YK000
Q 1101	CHIP TRANSISTOR 2SA1037K(R)	2SA1037KRZ
Q 1201	CHIP TRANSISTOR 2SC3326TE85L	2SC3326TE85L
Q 1202	CHIP TRANSISTOR 2SC3326TE85L	2SC3326TE85L
Q 1203	TRANSISTOR 2SC2060(Q)	Q2SC2060Q***
Q 1205	CHIP TRANSISTOR 2SA1037K(R)	2SA1037KRZ
Q 1301	CHIP TRANSISTOR 2SC2404-TX	2SC2404-TX
Q 1302	TR 2SC2412K(Q)(R)	2SC2412KQRZ
Q 1303	TR 2SC2412K(Q)(R)	2SC2412KQRZ
Q 1304	TR 2SC2412K(Q)(R)	2SC2412KQRZ
Q 1401	TR 2SC2412K(Q)(R)	2SC2412KQRZ
Q 1402	TR 2SC2412K(Q)(R)	2SC2412KQRZ
Q 1403	CHIP TRANSISTOR 2SC2404-TX	2SC2404-TX
Q 1404	CHIP TRANSISTOR 2SC2404-TX	2SC2404-TX
Q 2001	CHIP TRANSISTOR 2SC2404-TX	2SC2404-TX
Q 2002	CHIP TRANSISTOR 2SC2404-TX	2SC2404-TX
Q 4001	CHIP TRANSISTOR 2SC3326TE85L	2SC3326TE85L
Q 4002	CHIP TRANSISTOR 2SC3326TE85L	2SC3326TE85L
Q 4003	CHIP TRANSISTOR 2SC3326TE85L	2SC3326TE85L
Q 4004	TR 2SC2412K(Q)(R)	2SC2412KQRZ
Q 4005	CHIP TRANSISTOR 2SC3326TE85L	2SC3326TE85L
Q 4006	CHIP TRANSISTOR 2SC3326TE85L	2SC3326TE85L

Ref.No.	Description	Part No.
Q 4007	CHIP TRANSISTOR DTA144WKT96	DTA144WKT96
Q 4008	TR 2SC2412K(Q)(R)	2SC2412KQRZ
Q 5001	TR 2SC2412K(Q)(R)	2SC2412KQRZ
Q 5002	CHIP TRANSISTOR 2SA1037K(R)	2SA1037KRZ
Q 5003	TR 2SC2412K(Q)(R)	2SC2412KQRZ
Q 5004	TR 2SC2412K(Q)(R)	2SC2412KQRZ
Q 5008	CHIP TRANSISTOR 2SA1037K(R)	2SA1037KRZ
Q 5009	CHIP TRANSISTOR 2SA1037K(R)	2SA1037KRZ
Q 5010	CHIP TRANSISTOR 2SA1037K(R)	2SA1037KRZ
Q 5011	TR 2SC2412K(Q)(R)	2SC2412KQRZ
Q 5012	TR 2SC2412K(Q)(R)	2SC2412KQRZ
Q 5013	CHIP TRANSISTOR 2SA1037K(R)	2SA1037KRZ
Q 5014	TR 2SC2412K(Q)(R)	2SC2412KQRZ
Q 5015	TR 2SC2412K(Q)(R)	2SC2412KQRZ
Q 5016	TR 2SC2412K(Q)(R)	2SC2412KQRZ
Q 5017	CHIP TRANSISTOR 2SA1037K(R)	2SA1037KRZ
Q 5018	TR 2SC2412K(Q)(R)	2SC2412KQRZ
Q 5019	TR 2SC2412K(Q)(R)	2SC2412KQRZ
Q 5020	TR 2SC2412K(Q)(R)	2SC2412KQRZ
	RESISTORS	
R 1011	CHIP RES. 1/10W J 39K OHM	134F393C
R 1012	CHIP RES. 1/10W J 220 OHM	134F221C
R 1014	CHIP RES. 1/10W J 560 OHM	134F561C
R 1026	CHIP RESISTOR 1/10W J 390K OHM	134F394C
R 1101	CHIP RES. 1/10W J 10K OHM	134F103C
R 1102	CHIP RES. 1/10W J 1K OHM	134F102C
R 1103	CHIP RES. 1/10W J 68 OHM	134F680C
R 1104	CHIP RES. 1/10W J 68 OHM	134F680C
R 1201	CHIP RES. 1/10W J 100K OHM	134F104C
R 1202	CHIP RES. 1/10W J 1K OHM	134F102C
R 1203	CHIP RES. 1/10W J 1.5K OHM	134F152C
R 1204	CHIP RES. 1/10W J 2.7K OHM	134F272C
R 1205	CHIP RES. 1/10W J 470 OHM	134F471C
R 1207	CHIP RES. 1/10W J 180 OHM	134F181C
R 1208	CHIP RES. 1/10W J 100K OHM	134F104C
R 1212	CHIP RES. 1/10W J 100K OHM	134F104C
R 1213	CHIP RES. 1/10W J 180 OHM	134F181C
R 1214	CHIP RES. 1/10W J 22K OHM	134F223C
R 1215	CHIP RES. 1/10W J 470 OHM	134F471C
R 1216	CHIP RES. 1/10W J 2.7K OHM	134F272C
R 1217	CHIP RES. 1/10W J 1.5K OHM	134F152C
R 1218	CHIP RES. 1/10W J 100K OHM	134F104C
R 1219	CHIP RES. 1/10W J 1K OHM	134F102C
R 1220	CHIP RES. 1/10W J 120 OHM	134F121C
R 1221	CHIP RES. 1/10W J 470 OHM	134F471C
R 1222	CHIP RES. 1/10W J 100K OHM	134F104C
R 1223	CHIP RES. 1/10W J 100K OHM	134F104C
R 1225	CHIP RES. 1/10W J 100K OHM	134F104C
R 1226	CHIP RES. 1/10W J 22K OHM	134F223C
R 1233	CHIP RES. 1/10W J 47K OHM	134F473C
R 1234	CHIP RES. 1/10W J 68K OHM	134F683C
R 1235	CHIP RES. 1/10W J 470 OHM	134F471C
R 1236	CHIP RES. 1/10W J 2.2 OHM	134F229C
R 1311	CHIP RES. 1/10W J 1.5K OHM	134F152C
R 1312	CHIP RES. 1/10W J 1.5K OHM	134F152C
R 1313	CHIP RES. 1/10W J 1.5K OHM	134F152C
R 1324	CHIP RES. 1/10W J 680 OHM	134F681C
R 1325	CHIP RES. 1/10W J 680 OHM	134F681C
R 1326	CHIP RES. 1/10W J 2.2K OHM	134F222C
R 1327	CHIP RES. 1/10W J 680 OHM	134F681C

Ref.No.	Description	Part No.
R 1328	CHIP RES. 1/10W J 6.8K OHM	134F682C
R 1329	CHIP RES. 1/10W J 1K OHM	134F102C
R 1330	CHIP RES. 1/10W J 1.2K OHM	134F122C
R 1331	CHIP RES. 1/10W J 1K OHM	134F102C
R 1332	CHIP RES. 1/10W J 1K OHM	134F102C
R 1333	CHIP RES. 1/10W J 2.2K OHM	134F222C
R 1334	CHIP RES. 1/10W J 220 OHM	134F221C
R 1335	CHIP RES. 1/10W J 2.7K OHM	134F272C
R 1401	CHIP RES. 1/10W J 22K OHM	134F223C
R 1402	CHIP RES. 1/10W J 47K OHM	134F473C
R 1403	CHIP RES. 1/10W J 56K OHM	134F563C
R 1404	CHIP RES. 1/10W J 5.6K OHM	134F562C
R 1405	CHIP RES. 1/10W J 22K OHM	134F223C
R 1406	CHIP RES. 1/10W J 1M OHM	134F105C
R 1407	CHIP RES. 1/10W J 120K OHM	134F124C
R 1412	CHIP RES. 1/10W J 220K OHM	134F224C
R 1413	CHIP RES. 1/10W J 3.9K OHM	134F392C
R 1414	CHIP RES. 1/10W J 15K OHM	134F153C
R 1421	CHIP RES. 1/10W J 12K OHM	134F123C
R 1422	CHIP RES. 1/10W J 12K OHM	134F123C
R 1441	CHIP RES. 1/10W J 1K OHM	134F102C
R 1442	CHIP RES. 1/10W J 47K OHM	134F473C
R 1443	CHIP RES. 1/10W J 2.7K OHM	134F272C
R 1444	CHIP RES. 1/10W J 1K OHM	134F102C
R 1445	CHIP RES. 1/10W J 1K OHM	134F102C
R 1446	CHIP RES. 1/10W J 1K OHM	134F102C
R 1447	CHIP RES. 1/10W J 18K OHM	134F183C
R 1448	CHIP RES. 1/10W J 1K OHM	134F102C
R 1449	CHIP RES. 1/10W J 470 OHM	134F471C
R 1450	CHIP RES. 1/10W J 390 OHM	134F391C
R 1451	CHIP RES. 1/10W J 150K OHM	134F154C
R 2001	CHIP RES. 1/10W J 220K OHM	134F224C
R 2003	CHIP RES. 1/10W J 220 OHM	134F221C
R 2004	CHIP RES. 1/10W J 470K OHM	134F474C
R 2005	CHIP RES. 1/10W J 4.7K OHM	134F472C
R 2006	CHIP RES. 1/10W J 4.7K OHM	134F472C
R 2007	CHIP RES. 1/10W J 22K OHM	134F223C
R 2008	CHIP RES. 1/10W J 3.9K OHM	134F392C
R 2009	CHIP RES. 1/10W J 2.7K OHM	134F272C
R 2010	CHIP RES. 1/10W J 2.2M OHM	134F225C
R 2012	CHIP RES. 1/10W J 6.8K OHM	134F682C
R 2013	CHIP RES. 1/10W J 22K OHM	134F223C
R 2014	CHIP RES. 1/10W J 22K OHM	134F223C
R 2015	CHIP RES. 1/10W J 470K OHM	134F474C
R 2016	CHIP RES. 1/10W J 470K OHM	134F474C
R 2017	CHIP RES. 1/10W J 470 OHM	134F471C
R 2018	CHIP RES. 1/10W J 10K OHM	134F103C
R 2019	CHIP RES. 1/10W J 2.7K OHM	134F272C
R 2020	CHIP RES. 1/10W J 2.2K OHM	134F222C
R 2101	CHIP RES. 1/10W J 1M OHM	134F105C
R 2102	CHIP RES. 1/10W J 1M OHM	134F105C
R 2501	CHIP RES. 1/10W J 100K OHM	134F104C
R 2502	CHIP RES. 1/10W J 100K OHM	134F104C
R 2503	CHIP RES. 1/10W J 100K OHM	134F104C
R 2504	CHIP RES. 1/10W J 100K OHM	134F104C
R 2505	CHIP RES. 1/10W J 10K OHM	134F103C
R 2506	CHIP RES. 1/10W J 33K OHM	134F333C
R 2507	CHIP RES. 1/10W J 47K OHM	134F473C
R 2508	CHIP RES. 1/10W J 10K OHM	134F103C
R 2509	CHIP RES. 1/10W J 33K OHM	134F333C

Ref.No.	Description	Part No.
R 2510	CHIP RES. 1/10W J 47K OHM	134F473C
R 2511	CHIP RES. 1/10W J 10K OHM	134F103C
R 2512	CHIP RES. 1/10W J 33K OHM	134F333C
R 2513	CHIP RES. 1/10W J 47K OHM	134F473C
R 2514	CHIP RES. 1/10W J 10K OHM	134F103C
R 2515	CHIP RES. 1/10W J 33K OHM	134F333C
R 2516	CHIP RES. 1/10W J 47K OHM	134F473C
R 2522	CHIP RES. 1/10W J 8.2K OHM	134F822C
R 2526	CHIP RES. 1/10W J 100K OHM	134F104C
R 3001	CHIP RES. 1/10W J 1K OHM	134F102C
R 3002	CHIP RES. 1/10W J 1K OHM	134F102C
R 3003	CHIP RES. 1/10W J 6.2K OHM	134F622C
R 3004	CHIP RES. 1/10W J 4.7K OHM	134F472C
R 3005	CHIP RES. 1/10W J 6.8K OHM	134F682C
R 3006	CHIP RES. 1/10W J 1.5K OHM	134F152C
R 3007	CHIP RES. 1/10W J 4.7K OHM	134F472C
R 3008	CHIP RES. 1/10W J 100K OHM	134F104C
R 3009	CHIP RES. 1/10W J 22K OHM	134F223C
R 3010	CHIP RES. 1/10W J 15K OHM	134F153C
R 3011	CHIP RES. 1/10W J 6.8K OHM	134F682C
R 3012	CHIP RES. 1/10W J 3.9K OHM	134F392C
R 3013	CHIP RES. 1/10W J 2.2K OHM	134F222C
R 3014	CHIP RES. 1/10W J 47K OHM	134F473C
R 3015	CHIP RES. 1/10W J 2.2K OHM	134F222C
R 3016	CHIP RES. 1/10W J 47K OHM	134F473C
R 3017	CHIP RES. 1/10W J 91K OHM	134F913C
R 3018	CHIP RES. 1/10W J 150K OHM	134F154C
R 3019	CHIP RES. 1/10W J 150K OHM	134F154C
R 3020	CHIP RES. 1/10W J 6.8K OHM	134F682C
R 3021	CHIP RES. 1/10W J 15K OHM	134F153C
R 3022	CHIP RES. 1/10W J 22K OHM	134F223C
R 3023	CHIP RES. 1/10W J 100K OHM	134F104C
R 3024	CHIP RES. 1/10W J 12K OHM	134F123C
R 3025	CHIP RES. 1/10W J 4.7K OHM	134F472C
R 3026	CHIP RES. 1/10W J 6.8K OHM	134F682C
R 3027	CHIP RES. 1/10W J 4.7K OHM	134F472C
R 3028	CHIP RES. 1/10W J 1.5K OHM	134F152C
R 3029	CHIP RES. 1/10W J 5.6K OHM	134F562C
R 3030	CHIP RES. 1/10W J 1K OHM	134F102C
R 4001	CHIP RES. 1/10W J 4.7K OHM	134F472C
R 4002	CHIP RES. 1/10W J 1K OHM	134F102C
R 4003	CHIP RES. 1/10W J 3.3K OHM	134F332C
R 4004	CHIP RES. 1/10W J 68K OHM	134F683C
R 4005	CHIP RES. 1/10W J 4.7K OHM	134F472C
R 4006	CHIP RES. 1/10W J 4.7K OHM	134F472C
R 4007	CHIP RES. 1/10W J 1K OHM	134F102C
R 4008	CHIP RES. 1/10W J 100 OHM	134F101C
R 4009	CHIP RES. 1/10W J 1K OHM	134F102C
R 4010	CHIP RES. 1/10W J 100 OHM	134F101C
R 4011	CHIP RES. 1/10W J 100K OHM	134F104C
R 4012	CHIP RES. 1/10W J 100K OHM	134F104C
R 4013	CHIP RES. 1/10W J 6.8K OHM	134F682C
R 4014	CHIP RES. 1/10W J 6.8K OHM	134F682C
R 4015	CHIP RES. 1/10W J 22K OHM	134F223C
R 4016	CHIP RES. 1/10W J 22K OHM	134F223C
R 4017	CHIP RES. 1/10W J 82K OHM	134F823C
R 4018	CHIP RES. 1/10W J 82K OHM	134F823C
R 4019	CHIP RES. 1/10W J 10K OHM	134F103C
R 4020	CHIP RES. 1/10W J 10K OHM	134F103C
R 4023	CHIP RES. 1/10W J 4.7K OHM	134F472C

Ref.No.	Description	Part No.
R 4024	CHIP RES. 1/10W J 4.7K OHM	134F472C
R 4025	CHIP RES. 1/10W J 68K OHM	134F683C
R 4030	CHIP RES. 1/10W J 10K OHM	134F103C
R 4031	CHIP RES. 1/10W J 10K OHM	134F103C
R 4032	CHIP RES. 1/10W J 10K OHM	134F103C
R 4060	CHIP RES. 1/10W J 2.2K OHM	134F222C
R 5001	CHIP RES. 1/10W J 75 OHM	134F750C
R 5002	CHIP RES. 1/10W J 10K OHM	134F103C
R 5003	CARBON RES. 1/6W J 1.2K OHM	132A122T
R 5004	CARBON RES. 1/6W J 1.2K OHM	132A122T
R 5005	CARBON RES. 1/6W J 1.2K OHM	132A122T
R 5006	CHIP RES. 1/10W J 220 OHM	134F221C
R 5007	CHIP RES. 1/10W J 4.7K OHM	134F472C
R 5008	CHIP RES. 1/10W J 220 OHM	134F221C
R 5009	CHIP RES. 1/10W J 1K OHM	134F102C
R 5010	CHIP RES. 1/10W J 2.2K OHM	134F222C
R 5011	CHIP RES. 1/10W J 470 OHM	134F471C
R 5012	CHIP RES. 1/10W J 4.7K OHM	134F472C
R 5013	CHIP RES. 1/10W J 330K OHM	134F334C
R 5018	CHIP RES. 1/10W J 2.2K OHM	134F222C
R 5019	CHIP RES. 1/10W J 680 OHM	134F681C
R 5020	CHIP RES. 1/10W J 680 OHM	134F681C
R 5021	CHIP RES. 1/10W J 2.2K OHM	134F222C
R 5022	CHIP RES. 1/10W J 510 OHM	134F511C
R 5024	CHIP RES. 1/10W J 1K OHM	134F102C
R 5025	CHIP RES. 1/10W J 390 OHM	134F391C
R 5027	CHIP RES. 1/10W J 2.2K OHM	134F222C
R 5028	CHIP RES. 1/10W J 560 OHM	134F561C
R 5029	CHIP RES. 1/10W J 390 OHM	134F391C
R 5030	CHIP RES. 1/10W J 470 OHM	134F471C
R 5030	CHIP RES. 1/10W J 75 OHM	134F750C
R 5031	CHIP RES. 1/10W J 680 OHM	134F681C
R 5032	CHIP RES. 1/10W J 1K OHM	134F102C
R 5034	CHIP RES. 1/10W J 10K OHM	134F103C
R 5036	CHIP RES. 1/10W J 4.7K OHM	134F472C
R 5037	CHIP RES. 1/10W J 220 OHM	134F221C
R 5039	CHIP RES. 1/10W J 1K OHM	134F102C
R 5040	CHIP RES. 1/10W J 1K OHM	134F102C
R 5041	CHIP RES. 1/10W J 1.8K OHM	134F182C
R 5042	CHIP RES. 1/10W J 2.2K OHM	134F222C
R 5043	CHIP RES. 1/10W J 1K OHM	134F102C
R 5044	CHIP RES. 1/10W J 1K OHM	134F102C
R 5045	CHIP RES. 1/10W J 330 OHM	134F331C
R 5046	CHIP RES. 1/10W J 330 OHM	134F331C
R 5047	CHIP RES. 1/10W J 1K OHM	134F102C
R 5048	CHIP RES. 1/10W J 1K OHM	134F102C
R 5049	CHIP RES. 1/10W J 2.2K OHM	134F222C
R 5050	CHIP RES. 1/10W J 1K OHM	134F102C
R 5051	CHIP RES. 1/10W J 1K OHM	134F102C
R 5054	CHIP RES. 1/10W J 680 OHM	134F681C
R 5055	CHIP RES. 1/10W J 8.2K OHM	134F822C
R 5056	CHIP RES. 1/10W J 10K OHM	134F103C
R 5057	CHIP RES. 1/10W J 22K OHM	134F223C
R 5058	CHIP RES. 1/10W J 10K OHM	134F103C
R 5059	CHIP RES. 1/10W J 2K OHM	134F202C
R 5060	CHIP RES. 1/10W J 1.5K OHM	134F152C
R 5061	CHIP RES. 1/10W J 1K OHM	134F102C
R 5062	CHIP RES. 1/10W J 1K OHM	134F102C
R 5064	CARBON RES. 1/6W J 1.2K OHM	132A122S
R 5065	CARBON RES. 1/6W J 1.2K OHM	132A122T

Ref.No.	Description	Part No.
R 5066	CARBON RES. 1/6W J 1.2K OHM	132A122T
	MISCELLANEOUS	
B- 19	S METAL	0RM400839
CJ V+5	6P SHIELDLEAD WIRE ASS'Y	WX1E8110-017
CN 108	ANGLE SOCKET CONNECTOR, 11P	1700664
CN 109	ANGLE SOCKET CONNECTOR, 11P	1700664
CN 110	ANGLE SOCKET CONNECTOR, 14P	
CN7005	STRAIGHT PIN HEADER, 9P	5700741
CN7005	STRAIGHT PIN HEADER, 9P	1770265
CN7006	STRAIGHT PIN HEADER, 8P	5700740
CN7006	STRAIGHT PIN HEADER, 8P	1770264
CN7010	STRAIGHT PIN HEADER IL-S 2P	5700662
CN7010	STRAIGHT PIN HEADER, 2P	1740764
DL5001	DELAY LINE ADL-CT034F	5790107
J 1	WIRE, LEAD RED 160MM	WX3201A6FF16
J 1001	RCA JACK YKC21-3155	5700480
L 1001	READ INDUCTOR ELEMT100UHK	2152101T
L 1101	CHIP INDUCTOR 47UH	LLACKL8MS470
L 1102	CHIP INDUCTOR 47UH	LLACKL8MS470
L 1301	MICRO INDUCTOR 56UH-K-AXT	2165560T
L 1302	MICRO INDUCTOR 100UH-K-AXT	2165101T
L 1303	READ INDUCTOR ELEMT100KA	2152100T
L 1304	READ INDUCTOR ELEMT100KA	2152100T
L 2501	READ INDUCTOR ELEMT100KA	2152100T
L 2502	READ INDUCTOR ELEMT100KA	2152100T
L 5001	MICRO INDUCTOR 10UH-K-AXT	2165100T
L 5002	MICRO INDUCTOR 10UH-K-AXT	2165100T
L 5003	MICRO INDUCTOR 10UH-K-AXT	2165100T
L 5004	MICRO INDUCTOR 180UH-K-AXT	2165181T
L 5005	READ INDUCTOR ELEMT100UHK	2152101T
L 5006	READ INDUCTOR ELEMT100UHK	2152101T
RF1101	RF MODULATOR MDLK5A233A	1813523
S 1001	MINI DIN CONNECTOR YKF51-5303	1700956
T 1301	B.P.F SFBBB0000F5E-4029-02	1813259
T 1401	175MHZ LPF	1813239
T 5501	VARIABLE COIL 2217-1180	117D804
T 5502	3.58MHZ B.P.F 2539-064	1813434
T 5503	DELAY LINE SDL68130F5E-4106-01	5790108
TS1001	OPTICAL TRANSFER MODULATOR DCLDPQ*TS001	TOTX174
VR1401	VARIABLE RESISTOR EVND7AA02B24	238N253
VR2000	VARIABLE RESISTOR EVND7AA02B24	238N253
VR2001	VARIABLE RESISTOR EVN-D8AA03B53	238N251
VR5001	VARIABLE RESISTOR 500 EVND8AA03B52	238N247
X 1201	X'TAL 16.9344MHZ+-10PPM	1811380
	WIRE, LEAD BLACK 250MM	WX3001A6FF25
	4P BOARD IN CONNECTOR IMSA-1068-04A	5700096
	CT CONNECTOR 2MM PITCH 5P	5700484
	STRAIGHT PIN HEADER STICK	5700693
	CONNECTOR BASE 3P(IL-G)	1740455
	SHIELD WIRE ASS'Y(100MM) 100MM	WX1E8110-026
	WIRE, LEAD BLACK 40MM	WX3001A62204
	WIRE, LEAD BLACK 50MM	WX3001A82205
	WIRE, LEAD BROWN 70MM	WX3101A82207
	CARBON RES. 1/6W J 68 OHM	132A680T
	AUDIO PCB	BE8110F02007

SPINDLE PCB

Ref. No.	Description	Part No.
	SPINDLE PCB ASS'Y	ORSA01162
	CAPACITORS	
C204	ELECTROLYTIC CAP. 47UF/25V M	126D476S
C205	ELECTROLYTIC CAP. 47UF/25V M	126D476S
C215	ELECTROLYTIC CAP. 220UF/35V M	126E227S
C216	C-CAP 0.1UF	1220871S
C217	ELECTROLYTIC CAP. 220UF/35V M	126E227S
C218	STACKED FILM CAP. 1UF/50V J	125U105S
C218	POLYESTER FILMMMTV105J50AC	122Z321S
C219	STACKED FILM CAP. 1UF/50V J	125U105S
C219	POLYESTER FILMMMTV105J50AC	122Z321S
C220	C-CAP 0.1UF	1220871S
C222	STACKED FILM CAP. 1UF/50V J	125U105S
C222	POLYESTER FILMMMTV105J50AC	122Z321S
C223	ELECTLYTIC CAP. HI-LIPPLEECEA1VFS470B	122Z559S
C224	ELECTROLYTIC CAP. 470UF/25V M	126D477S
C225	ELECTROLYTIC CAP. 470UF/25V M	126D477S
C226	CERAMIC CAP. F Z 0.022UF/50V	12F3223S
C227	CERAMIC CAP. F Z 0.022UF/50V	12F3223S
	DIODES	
D206	FASTRELOVERYDIODE 10DF1	10DF1
D207	FASTRELOVERYDIODE 10DF1	10DF1
D208	FASTRELOVERYDIODE 10DF1	10DF1
D209	FASTRELOVERYDIODE 10DF1	10DF1
	ICS	
IC 204	OP AMP NJM4560L	14LO557
IC 204	IC BA4560N	GBA4560N****
IC 205	IC DUAL OP AMP NJM4558LD	NJM4558LD
IC 205	IC DUAL OP AMP BA4558NDX	BA4558NDX
IC 206	TRANSISTOR ARRAYSTA455C	GSTA455C****
	TRANSISTORS	
Q203	TR 2SB1240-TV2(Q)	Q2SB1240TV2Q
Q203	TR 2SB1240-TV2(R)	Q2SB1240TV2R
Q204	TR 2SD1862-TV2(Q)	Q2SD1862TV2Q
Q204	TR 2SD1862-TV2(R)	Q2SD1862TV2R
Q210	TRANSISTOR 2SC1740S-TP(Q)	Q2SC1740STPQ
Q210	TRANSISTOR 2SC1740S-TP(R)	Q2SC1740STPR
Q211	TR 2SA933S-TP(Q)	Q2SA933STPQ*
Q211	TR 2SA933S-TP(R)	Q2SA933STPR*
Q212	TRANSISTOR 2SC1740S-TP(Q)	Q2SC1740STPQ
Q212	TRANSISTOR 2SC1740S-TP(R)	Q2SC1740STPR
Q213	TR 2SA933S-TP(Q)	Q2SA933STPQ*
Q213	TR 2SA933S-TP(R)	Q2SA933STPR*
Q214	TRANSISTOR 2SC1740S-TP(Q)	Q2SC1740STPQ
Q214	TRANSISTOR 2SC1740S-TP(R)	Q2SC1740STPR
Q215	TRANSISTOR 2SC1740S-TP(Q)	Q2SC1740STPQ
Q215	TRANSISTOR 2SC1740S-TP(R)	Q2SC1740STPR
	RESISTORS	
R212	CARBON RES. 1/6W J 560 OHM	132A561T
R240	CARBON RES. 1/6W J 4.7K OHM	132A472T
R241	CARBON RES. 1/6W J 39K OHM	132A393T
R242	CARBON RES. 1/6W J 39K OHM	132A393T
R243	CARBON RES. 1/6W J 4.7K OHM	132A472T
R244	CARBON RES. 1/6W J 1K OHM	132A102T
R245	CARBON RES. 1/6W J 1K OHM	132A102T
R246	METAL RES. 1W J 220 OHM	534A221
R247	METAL RES. 1W J 220 OHM	534A221
R248	METAL RES. 1W J 220 OHM	534A221
R249	METAL RES. 1W J 220 OHM	534A221
R250	CARBON RES. 1/6W J 1K OHM	132A102T
R251	CARBON RES. 1/6W J 1K OHM	132A102T
R252	CARBON RES. 1/6W J 1.5K OHM	132A152T
R253	CARBON RES. 1/6W J 1.5K OHM	132A152T
R254	CARBON RES. 1/6W J 6.8K OHM	132A682T
R255	CARBON RES. 1/6W J 6.8K OHM	132A682T
R256	CARBON RES. 1/6W J 12K OHM	132A123T
R258	CARBON RES. 1/6W J 10K OHM	132A103T
R259	CARBON RES. 1/6W J 10 OHM	132A100T
R261	CARBON RES. 1/6W J 47K OHM	132A473T
R262	CARBON RES. 1/6W J 47K OHM	132A473T
R263	CARBON RES. 1/6W J 47K OHM	132A473T
R264	M-RES	134A100
R265	CARBON RES. 1/6W J 10K OHM	132A103T
R269	CARBON RES. 1/6W J 1.5K OHM	132A152T
R270	CARBON RES. 1/6W J 1.5K OHM	132A152T
R271	CARBON RES. 1/6W J 4.7K OHM	132A472T
	MISCELLANEOUS	
B-14	METAL, REINTOR CEMENT	0RM400410
B201	FERRITECOREFBA04HA600BB-00	119O057
B202	FERRITECOREFBA04HA600BB-00	119O057
CN 104	STRAIGHT PIN HEADER,4P	1740766
J502	IC PROTECTOR ICP-N25	579F088Z
L- 3	SCREW, B TIGHT M3X8 BIND HEAD	GBMB308
L201	CHOKECOIL3382-207	117D798
	WIRE ASSY 9P	WX1E8110-027
	PP POLYETIRANE BAG(FOR I/B)	Z22246P
	IC	GC89***NE001
	REMOTE CONTROLERRRT4002-5403R	UREMT36SR004
	REMO BATTERY	0RDK00005
⚠	BOOK, INSTRUCTION	0RMN00207
	DRY BATTERY UM4/R03U 2PCS PACK	579W100
	ACCESSORIES CABLE	1813550
	ACCESSORIES CABLE FC-V-10	1813471
	SPINDL PCB	BE8100F01003

POWER TRANS PCB

Ref. No.	Description	Part No.
	POWER TRANS PCB ASS'Y	
	CAPACITOR	
C	1P BOARD IN LEAD ASS'Y	WX1E8002-003
	SWITCHE	
SW 001⚠	VOLTAGE SELECTOR SWITCH	1621607
	MISCELLANEOUS	
A	1P BOARD IN LEAD ASS'Y	WX1E8002-001
CN 107	CONNECTOR ASSY 9P	WX1E8100-002
E	1P BOARD IN LEAD ASS'Y	WX1E8002-002
L 001⚠	CHOKE COIL	1812985
TR 001⚠	POWER TRANS OX-91100	115E981
	WIRE ASSY 3P 260MM	WX1E8100-015
⚠	AC CORD	5750390
	SERIAL NO. LABEL	24L7906
	POWER TRANS PCB	

FRONT PCB

Ref. No.	Description	Part No.
	FRONT PCB ASS'Y	ORSA01132-1
	CAPACITORS	
C1703	ELECTROLYTIC CAP. 100UF/6.3V M	126A107
C1704	CERAMIC CAP. F Z 0.022UF/50V	32F3223S
C1705	ELECTROLYTIC CAP. 10UF/16V M	126C106S
C1706	CERAMIC CAP. F Z 0.022UF/50V	32F3223S
	DIODES	
D1701	DIODE 1SS133	1SS133T
D1702	DIODE 1SS133	1SS133T
D1703	DIODE 1SS133	1SS133T
D1704	DIODE 1SS133	1SS133T
D1705	DIODE 1SS133	1SS133T
D1706	DIODE 1SS133	1SS133T
D1707	DIODE 1SS133	1SS133T
D1708	DIODE 1SS133	1SS133T
D1709	DIODE 1SS133	1SS133T
D1710	DIODE, ZENER	MTZJ9.1BT
	ICS	
IC1701	MYCON (FOR FRONT) UPD75216ACW-B87	GC90000NE039
	or	
	MICRO COMPUTOR UPD75P216ACW	14DV751C
	TRANSISTORS	
Q1701	TRANSISTOR 2SC1740S(Q)	2SC1740SQRZ
Q1702	D.TR(DTC114E)	DTC114EZ
	RESISTORS	
R1701	CARBON RES. 1/6W J 10K OHM	132A103T
R1702	CARBON RES. 1/6W J 10K OHM	132A103T
R1703	CARBON RES. 1/6W J 220 OHM	132A221T
R1704	CARBON RES. 1/6W J 10K OHM	132A103T
R1705	CARBON RES. 1/6W J 10K OHM	132A103T
R1706	CARBON RES. 1/6W J 10K OHM	132A103T
R1707	CARBON RES. 1/6W J 10K OHM	132A103T
R1712	CARBON RES. 1/6W J 10K OHM	132A103T
R1713	CARBON RES. 1/6W J 220 OHM	132A221T
R1714	CARBON RES. 1/6W J 220 OHM	132A221T
R1715	CARBON RES. 1/6W J 220 OHM	132A221T
R1716	CARBON RES. 1/6W J 220 OHM	132A221T
R1717	CARBON RES. 1/6W J 220 OHM	132A221T
R1718	CARBON RES. 1/6W J 220 OHM	132A221T
R1719	CARBON RES. 1/6W J 220 OHM	132A221T
R1720	CARBON RES. 1/6W J 220 OHM	132A221T
R1721	CARBON RES. 1/6W J 220 OHM	132A221T
R1723	CARBON RES. 1/6W J 220 OHM	132A221T
R1725	CARBON RES. 1/6W J 47K OHM	132A473T
R1726	CARBON RES. 1/6W J 47K OHM	132A473T
R1729	CARBON RES. 1/6W J 47K OHM	132A473T
R1744	CARBON RES. 1/6W J 47K OHM	132A473T
R1747	CARBON RES. 1/6W J 47K OHM	132A473T
R1751	CARBON RES. 1/6W J 10K OHM	132A103T
R1752	CARBON RES. 1/5W J 100 OHM	132A101T
	SWITCHES	
S1701	LIGHT TOUCH SWITCH EVQ-11504M or	SST0101MS001
	TACTILE SWITCH	5622157
S1702	LIGHT TOUCH SWITCH EVQ-11504M or	SST0101MS001
	TACTILE SWITCH	5622157
S1703	LIGHT TOUCH SWITCH EVQ-11504M or	SST0101MS001
	TACTILE SWITCH	5622157
S1704	LIGHT TOUCH SWITCH EVQ-11504M or	SST0101MS001
	TACTILE SWITCH	5622157
S1705	LIGHT TOUCH SWITCH EVQ-11504M or	SST0101MS001
	TACTILE SWITCH	5622157
S1706	LIGHT TOUCH SWITCH EVQ-11504M or	SST0101MS001
	TACTILE SWITCH	5622157
S1707	LIGHT TOUCH SWITCH EVQ-11504M or	SST0101MS001
	TACTILE SWITCH	5622157
S1708	LIGHT TOUCH SWITCH EVQ-11504M or	SST0101MS001
	TACTILE SWITCH	5622157
S1709	LIGHT TOUCH SWITCH EVQ-11504M or	SST0101MS001
	TACTILE SWITCH	5622157
S1710	LIGHT TOUCH SWITCH EVQ-11504M or	SST0101MS001
	TACTILE SWITCH	5622157
S1711	LIGHT TOUCH SWITCH EVQ-11504M or	SST0101MS001
	TACTILE SWITCH	5622157
S1712	LIGHT TOUCH SWITCH EVQ-11504M or	SST0101MS001
	TACTILE SWITCH	5622157
S1713	LIGHT TOUCH SWITCH EVQ-11504M or	SST0101MS001
	TACTILE SWITCH	5622157
S1714	LIGHT TOUCH SWITCH EVQ-11504M or	SST0101MS001
	TACTILE SWITCH	5622157
S1715	LIGHT TOUCH SWITCH EVQ-11504M or	SST0101MS001
	TACTILE SWITCH	5622157
S1716	LIGHT TOUCH SWITCH EVQ-11504M or	SST0101MS001
	TACTILE SWITCH	5622157
S1717	LIGHT TOUCH SWITCH EVQ-11504M or	SST0101MS001
	TACTILE SWITCH	5622157
S1718	LIGHT TOUCH SWITCH EVQ-11504M or	SST0101MS001
	TACTILE SWITCH	5622157
S1719	LIGHT TOUCH SWITCH EVQ-11504M or	SST0101MS001
	TACTILE SWITCH	5622157
S1720	LIGHT TOUCH SWITCH EVQ-11504M or	SST0101MS001
	TACTILE SWITCH	5622157
S1721	LIGHT TOUCH SWITCH EVQ-11504M or	SST0101MS001
	TACTILE SWITCH	5622157
S1722	LIGHT TOUCH SWITCH EVQ-11504M or	SST0101MS001
	TACTILE SWITCH	5622157
S1723	LIGHT TOUCH SWITCH EVQ-11504M or	SST0101MS001
	TACTILE SWITCH	5622157
S1724	LIGHT TOUCH SWITCH EVQ-11504M or	SST0101MS001
	TACTILE SWITCH	5622157
S1725	LIGHT TOUCH SWITCH EVQ-11504M or	SST0101MS001
	TACTILE SWITCH	5622157
S1726	LIGHT TOUCH SWITCH EVQ-11504M or	SST0101MS001
	TACTILE SWITCH	5622157
S1727	LIGHT TOUCH SWITCH EVQ-11504M or	SST0101MS001
	TACTILE SWITCH	5622157
S1728	LIGHT TOUCH SWITCH EVQ-11504M or	SST0101MS001
	TACTILE SWITCH	5622157
S1729	LIGHT TOUCH SWITCH EVQ-11504M or	SST0101MS001
	TACTILE SWITCH	5622157
S1730	LIGHT TOUCH SWITCH EVQ-11504M or	SST0101MS001
	TACTILE SWITCH	5622157
S1731	LIGHT TOUCH SWITCH EVQ-11504M or	SST0101MS001
	TACTILE SWITCH	5622157
S1732	LIGHT TOUCH SWITCH EVQ-11504M or	SST0101MS001
	TACTILE SWITCH	5622157
	MISCELLANEOUS	
CA106	13P PARALLEL LINE ASS'Y 14573977-3	WX1E8110-008
CA1004	5P PARALLEL LINE ASS'Y 34073977-5	WX1E8110-009

Ref. No.	Description	Part No.
CA1501	8P PARALLEL LINE ASS'Y 70977-8	WX1E8110-013
CA7001	6P PARALLEL LINE ASS'Y 450977-6	WX1E8110-003
CA7002	9P PARALLEL LINE ASS'Y 450977-9	WX1E8110-004
FL1701	FL TUBE CF1002C	TVFD15*NT001
LD1701	LED LN849RPH	LN849RPH
LD1702	LED GREEN LN351GPXBR	ELN351GPXBR*
LD1703	LED GREEN LN351GPXBR	ELN351GPXBR*
LD1704	LED GREEN LN351GPXBR	ELN351GPXBR*
LD1705	LED GREEN LN351GPXBR	ELN351GPXBR*
LD1706	LED UNBAR LN451YPXBR	ELN451YPXBR*
LD1707	LED RED LN251GPXBR	ELN251RPXBR*
LD1708	LED RED LN251GPXBR	ELN251RPXBR*
LD1709	LED RED LN251GPXBR	ELN251RPXBR*
LD1710	LED RED LN251GPXBR	ELN251RPXBR*
LD1711	LED RED LN251GPXBR	ELN251RPXBR*
LD1712	LED RED LN251GPXBR	ELN251RPXBR*
RM1701	REMOCON RECEIVE UNIT SBX1610-02 or	1813438
	REMOCON RECEIVE UNIT	1812729
X1701	CERAMIC RESONATOR EFO-GC4194A4	1813140
	TAPE, or	24W9751
	LEAD CLAMPER L=47MM or	1790665
	WIRE, LEAD BLACK 40MM UL1007	WX3001A62204
	WIRE, LEAD BLACK 40MM UL1007	WX3001A62204
	WIRE, LEAD ASS'Y 1P L or	0RE400016
	FRONT PCB	BE8110F02004

SWITCH PCB

Ref. No.	Description	Part No.
	SWITCH PCB ASS'Y	ORSA01132-2
	RESISTORS	
R1509	CARBON RES. 1/6W J 10K OHM	132A103T
R1510	CARBON RES. 1/6W J 2.2K OHM	132A222T
	SWITCHES	
SW1501	SWITCH, SLIDE SSSU11-3	SSS0103AL001
SW1502	SWITCH, SLIDE SSSU11-2	SSS0102AL005
SW1503	SWITCH, SLIDE SSSU11-2	SSS0102AL005
SW1504	SWITCH, TACT	5622053
SW1505	SWITCH, TACT	5622053
SW1506	SWITCH, TACT	5622053
SW1507	SWITCH, TACT	5622053
	MISCELLANEOUS	
CA7003	14P PARALLEL LINE ASS'Y 22573977-4	WX1E8110-005
CN1501	ANGLE PIN HEADER,Y, 8P 173979-8	1770253
J1502	RCA JACK YKC21-5220	5700539
VR1502	VOLUME RK09L1120 20K(B)	539A908
VR1503	VOLUME RK09L1120 20K(B)	539A908
VR1504	VOLUME EVU-LCAF15A24 20K(A)	539N861
VR1505	VOLUME EVU-LCAF15A24 20K(A)	539N861
	SWITCH PCB	

MIC PCB

Ref. No.	Description	Part No.
	MIC PCB ASS'Y	ORSA01132-3
	CAPACITOR	
C6001	C-CAP SL50V104M-5FT	12F3104S
	RESISTORS	
R6001	CARBON RES. 1/5W J 100 OHM	132A101T
R6002	CARBON RES. 1/5W J 100 OHM	132A101T
	MISCELLANEOUS	
CA7004	4P LEAD WIRE ASS'Y	WX1E8100-024
J6001	MIC JACK YKB26-5186	1630432
J6002	MIC JACK YKB26-5186	1630432
	MIC PCB	

HEADPHONE PCB

Ref. No.	Description	Part No.
	HEADPHONE PCB ASS'Y	ORSA01132-4
	CAPACITORS	
C1501	CERAMIC CAP. F Z 0.01UF/50V or	32F3103S
	CERAMIC CAP. F Z 0.01UF/50V	12F3103S
C1502	CERAMIC CAP. F Z 0.01UF/50V or	32F3103S
	CERAMIC CAP. F Z 0.01UF/50V	12F3103S
C1503	ELECTROLYTIC CAP. 100UF/6.3V M H7	526R107
C1504	ELECTROLYTIC CAP. 100UF/6.3V M H7	526R107
C1505	C-CAP SL50V104M-5FT	12F3104S
	IC	
IC1501	OP AMP NJM4556L	NJM4556L
	RESISTORS	
R1501	CARBON RES. 1/6W J 1.8K OHM	132A182T
R1502	CARBON RES. 1/6W J 1.8K OHM	132A182T
R1505	PCB JUMPER D0.6-P5.0	JW5.0T
R1506	PCB JUMPER D0.6-P5.0	JW5.0T
R1507	CARBON RES. 1/6W J 39 OHM	132A390T
R1508	CARBON RES. 1/6W J 39 OHM	132A390T
	MISCELLANEOUS	
J1501	HEAD PHONE JACK YKB26-5010	1630407
VR1501	VOLUME EVU-NCAF15A24	539N842
	HEADPHONE PCB	

CD PCB

Ref. No.	Description	Part No.
	CD PCB ASS'Y	0RSA00727
	CAPACITORS	
C810	ELECTROLYTIC CAP. 2.2UF/50V M	126F225S
C811	ELECTROLYTIC CAP. 22UF/16V M	126C226S
C812	ELECTROLYTIC CAP. 10UF/16V M	126C106S
C813	ELECTROLYTIC CAP. 100UF/10V M	126B107S
C814	ELECTROLYTIC CAP. 100UF/10V M	126B107S
C815	STACKED FILM CAP. 0.1UF/50V J or	125U104S
	MYLAR CAP. 0.1UF/50V J	2254104S
	DIODES	
D810	DIODE 1SS133	1SS133T
D811	DIODE 1SS133	1SS133T
D812	DIODE 1SS133	1SS133T
D813	DIODE 1SS133	1SS133T
D814	DIODE 1SS133	1SS133T
D815	DIODE 1SS133	1SS133T
D816	DIODE 1SS133	1SS133T
D817	DIODE 1SS133	1SS133T
D818	DIODE 1SS133	1SS133T
D819	DIODE 1SS133	1SS133T
D820	DIODE 1SS133	1SS133T
D823	DIODE 1SS133	1SS133T

Ref. No.	Description	Part No.
	ICS	
IC810	IC DUAL OP AMP NJM4558LD or	NJM4558LD
	IC DUAL OP AMP BA4558NDX	BA4558NDX
IC811	IC DUAL OP AMP NJM4558LD or	NJM4558LD
	IC DUAL OP AMP BA4558NDX	BA4558NDX
	TRANSISTORS	
Q810	RES. BUILT-IN DTC144ES-TP	QDTC144ESTP*
Q811	RES. BUILT-IN DTA144ES-TP	QDTA144ESTP*
Q812	RES. BUILT-IN DTC114ES-TP	QDTC114ESTP*
Q813	RES. BUILT-IN DTC114ES-TP	QDTC114ESTP*
	RESISTORS	
R810	CARBON RES. 1/6W J 2.2K OHM	132A222T
R811	CARBON RES. 1/6W J 15K OHM	132A153T
R812	CARBON RES. 1/6W J 39K OHM	132A393T
R814	CARBON RES. 1/6W J 10K OHM	132A103T
R815	CARBON RES. 1/6W J 2.2K OHM	132A222T
R816	CARBON RES. 1/6W J 15K OHM	132A153T
R817	CARBON RES. 1/6W J 56K OHM	132A563T
R818	CARBON RES. 1/6W J 18K OHM	132A183T
R819	CARBON RES. 1/6W J 10K OHM	132A103T
R820	CARBON RES. 1/6W J 10K OHM	132A103T
R821	CARBON RES. 1/6W J 22K OHM	132A223T
R822	CARBON RES. 1/6W J 15K OHM	132A153T
R823	CARBON RES. 1/6W J 18K OHM	132A183T
R824	CARBON RES. 1/6W J 10K OHM	132A103T
R825	CARBON RES. 1/6W J 10K OHM	132A103T
R826	CARBON RES. 1/5W J 100 OHM	132A101T
R827	CARBON RES. 1/6W J 2.2K OHM	132A222T
R828	CARBON RES. 1/5W J 100 OHM	132A101T
R833	CARBON RES. 1/6W J 15K OHM	132A153T
	MISCELLANEOUS	
	CD PCB 55X40 Version A	BE8002F0104A
	CONNECTOR ASSY 11P	WX1E8002-008
	CD PCB	

CHASSIS ELECTRICAL PARTS LIST

Ref. No.	Description	Part No.
	WIRE ASS'Y	WX1E8100-028
	8P WIRE PARALLEL ASS'Y 420MM	WX1E8110-001
	9P WIRE PARALLEL ASS'Y 420MM	WX1E8110-002
	WIRE ASS'Y	WX1E8110-012

CABINET PARTS LIST

REF. NO.	DESCRIPTION	PART NO.
A-1	FONT PANNEL ASS'Y	0RM200238
A-2	CONTROL BOTTON	0RM400228
A-3	CHASSIS	0RM100027
A-4	TOP COVER	0RM100028
A-5	TRAY ACCESSORIES	0RM200197
A-6	FOOT	4179
A-7	BRAND BADGE	0RM200237
A-8 ⚠	LABEL, CAUTION	0RM
A-9	RIVET	6204
B-1	VOLUME HOLDER	0RM200211
B-2	JACK HOLDER	0RM400788
B-3	HEAT THINK	0RM300016
B-4	METAL, EARTH	23X9361
B-5	LED HOLDER	0RM400252
B-6	FL HOLDER	0RM400880
B-9	CUSHION	0RM400369
B-10	SHEET	0RM400370
B-12	LED HOLDER A	0RM200210
B-13	SHIELD SHEET	0RM400901
B-14	METAL, REINFORCEMENT	0RM400410
B-15	LED HOLDER B	0RM400787
B-16	METAL	0RM400486
B-19	S METAL	0RM400839
B-20	REINFORCEMENT SHEET	0RM400919
L-1	SCREW, S-TIGHT 3X6 BIND HEAD	GBMS306
L-2	SCREW, B-TIGHT M3X8 BIND HEAD	GBKB308
L-3	SCREW, B-TIGHT M3X8 BIND HEAD	GBMB308
L-4	SCREW, P TIGHT3X6 BIND HEAD	GBMP306
L-5	S-TIGHT 3X5 BIND HEAD	GBMS305
L-6	SCREW, S-TIGHT SPRING M4 X 7 BIND HEAD	GBM54070
L-7	SCREW, B-TIGHT M3X8 FLANGE HEAD	GCMB308
L-8	SCREW, B-TIGHT	WPM5128
L-9	SCREW, B-TIGHT M3X12 BIND HEAD	GBMB312
	SIDE PACK L	0RM100126
	SIDE PACK R	0RM100127
	BOX, CARTON	0RM400928
	SK SHEET	32E7036
	FONT COVER	0RM400541

REF. NO.	DESCRIPTION	PART NO.

CABINET EXPLODED VIEW

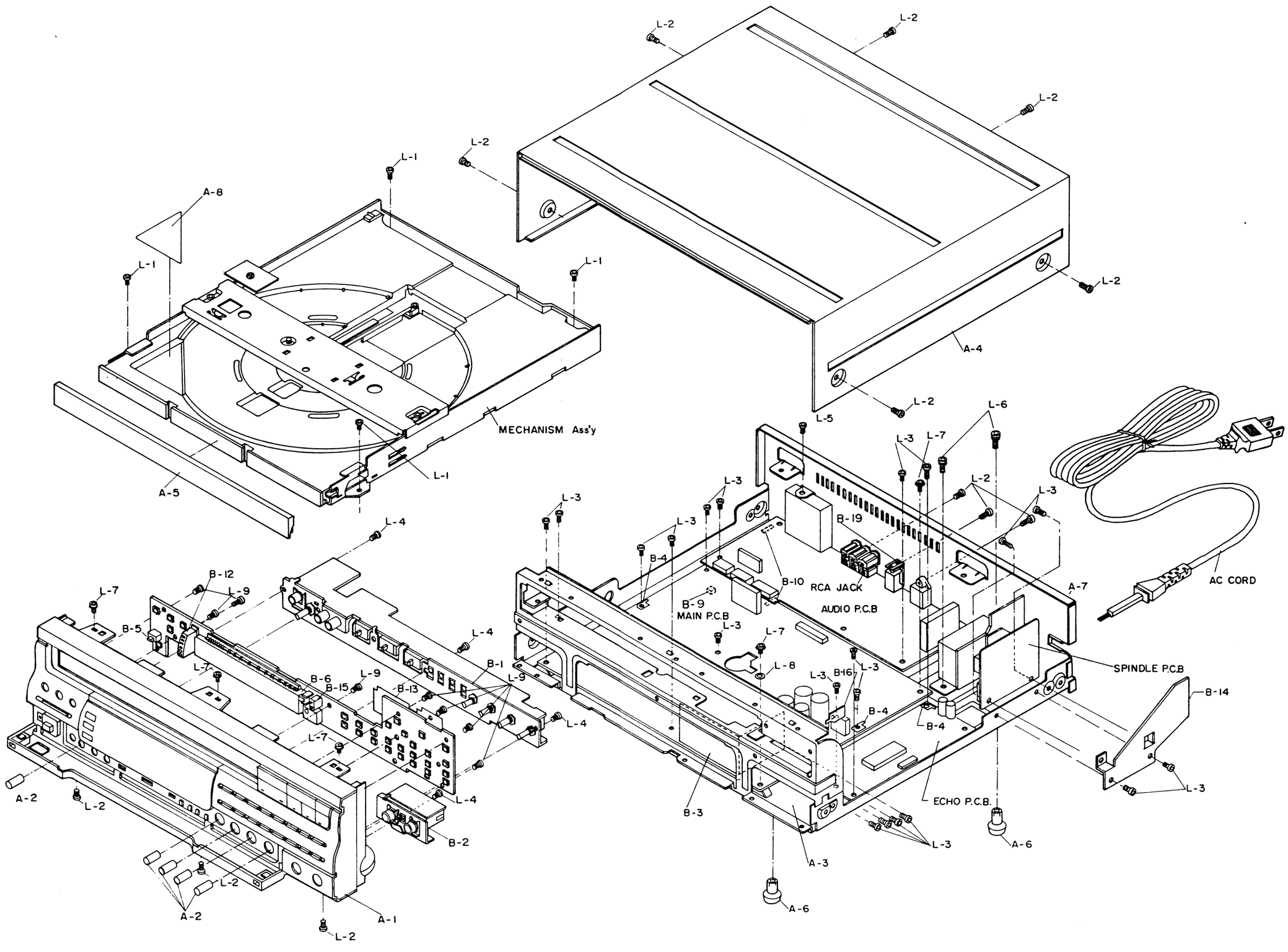

LV MECHANISM EXPLODED VIEW

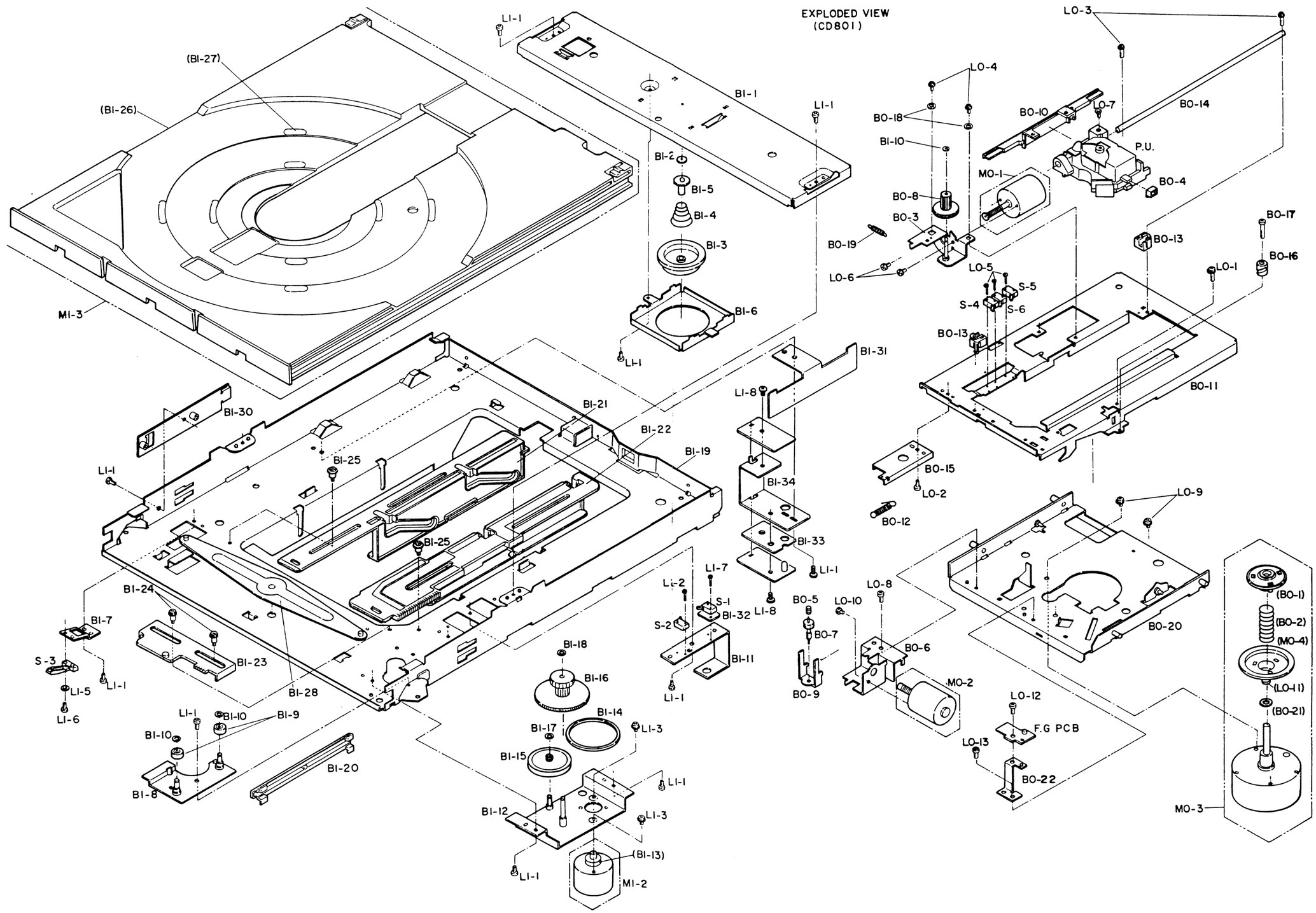

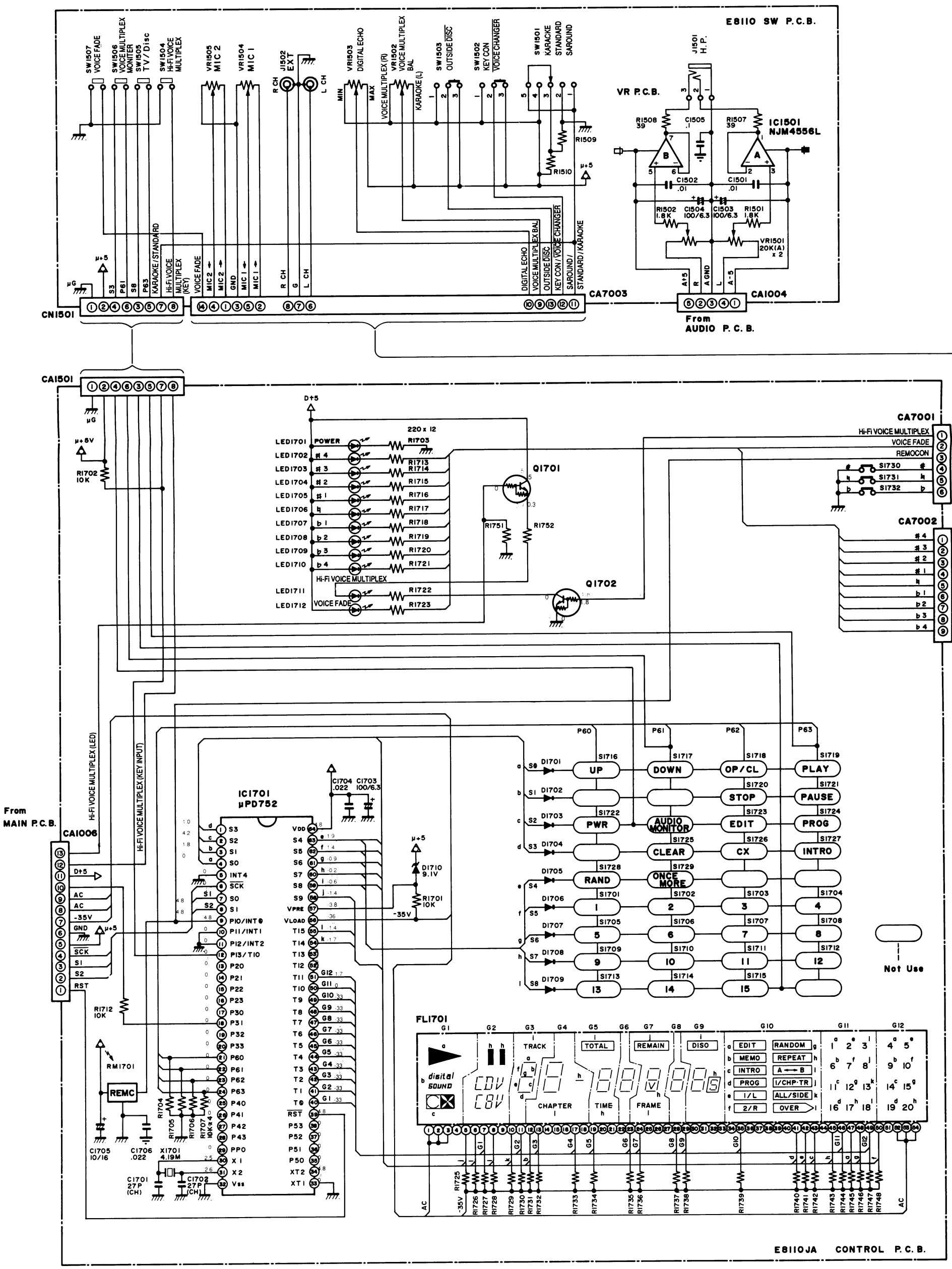

RED No. = At STOP time to Voltage Level

GREEN No = At PLAY time to Voltage Level

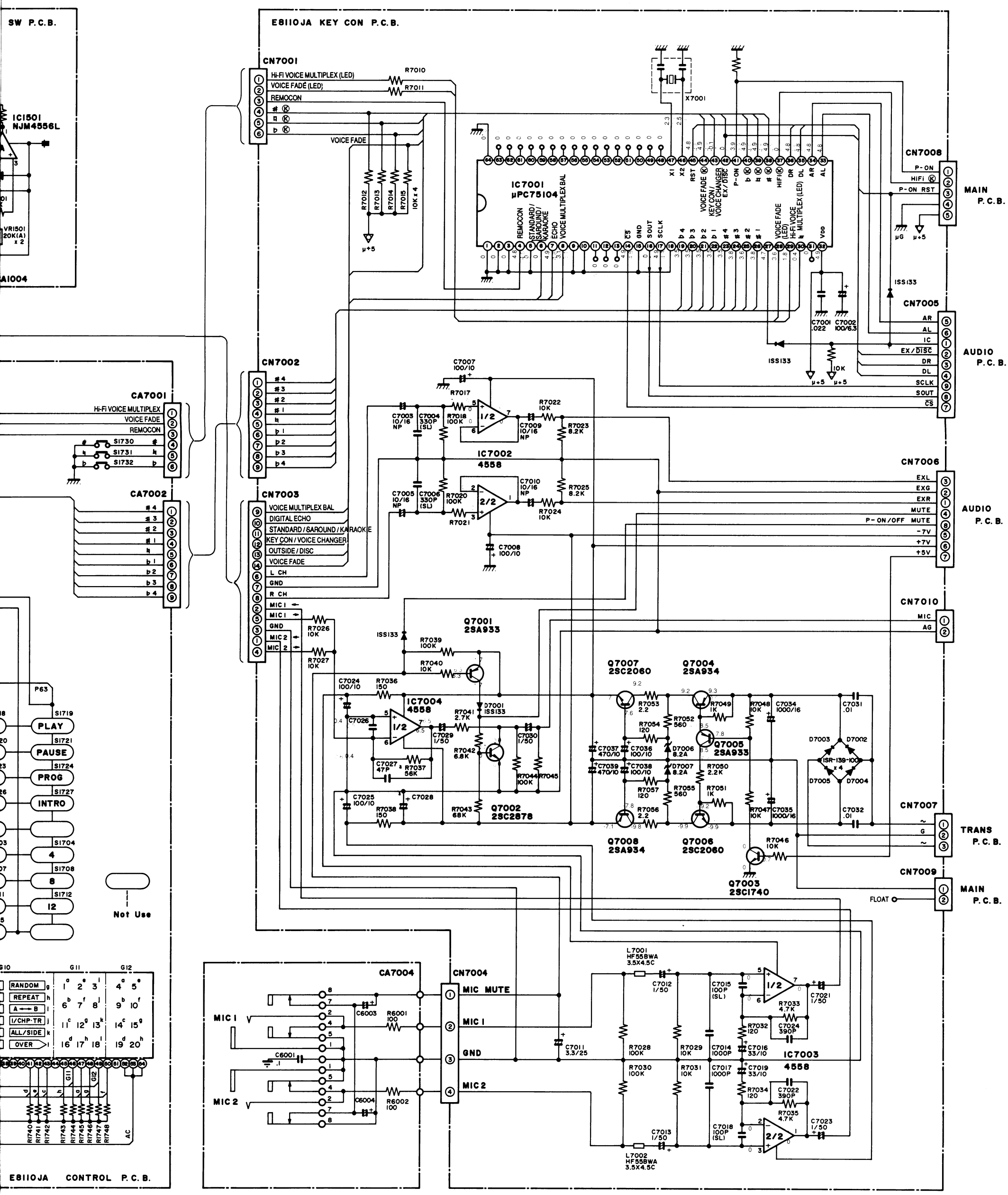
SW P.C.B.
IC1501
NJM4556L
VR1501
20K(A)
x 2
A1004
E8110JA KEY CON P.C.B.
CN7001
Hi-Fi VOICE MULTIPLEX (LED)
VOICE FADE (LED)
REMOCON
VOICE FADE
R7010
R7011
R7012
R7013
R7014
R7015
10K x 4
IC7001
μPC75104
X7001
CN7008
P-ON
HIFI
P-ON RST
MAIN
P.C.B.
CN7005
AR
AL
IC
EX/DISC
DR
DL
SCLK
SOUT
CS
AUDIO
P.C.B.
CN7002
CN7003
VOICE MULTIPLEX BAL
DIGITAL ECHO
STANDARD / SAROUND / KARAOKE
KEY CON / VOICE CHANGER
OUTSIDE / DISC
VOICE FADE
L CH
GND
R CH
MIC 1
MIC 2
CA7001
Hi-Fi VOICE MULTIPLEX
VOICE FADE
REMOCON
S1730
S1731
S1732
CA7002
IC7002
4558
CN7006
EXL
EXG
EXR
MUTE
P-ON/OFF MUTE
-7V
+7V
+5V
CN7010
MIC
AG
Q7001
2SA933
Q7007
2SC2060
Q7004
2SA934
IC7004
4558
Q7005
2SA933
Q7002
2SC2878
Q7008
2SA934
Q7006
2SC2060
Q7003
2SC1740
CN7007
TRANS
P.C.B.
CN7009
MAIN
P.C.B.
FLOAT
P63
PLAY
PAUSE
PROG
INTRO
4
8
12
Not Use
RANDOM
REPEAT
A ⟷ B
1/CHP·TR
ALL/SIDE
OVER
E8110JA CONTROL P.C.B.
CA7004
MIC 1
MIC 2
CN7004
MIC MUTE
GND
L7001
HF55BWA
3.5X4.5C
L7002
HF55BWA
3.5X4.5C
IC7003
4558

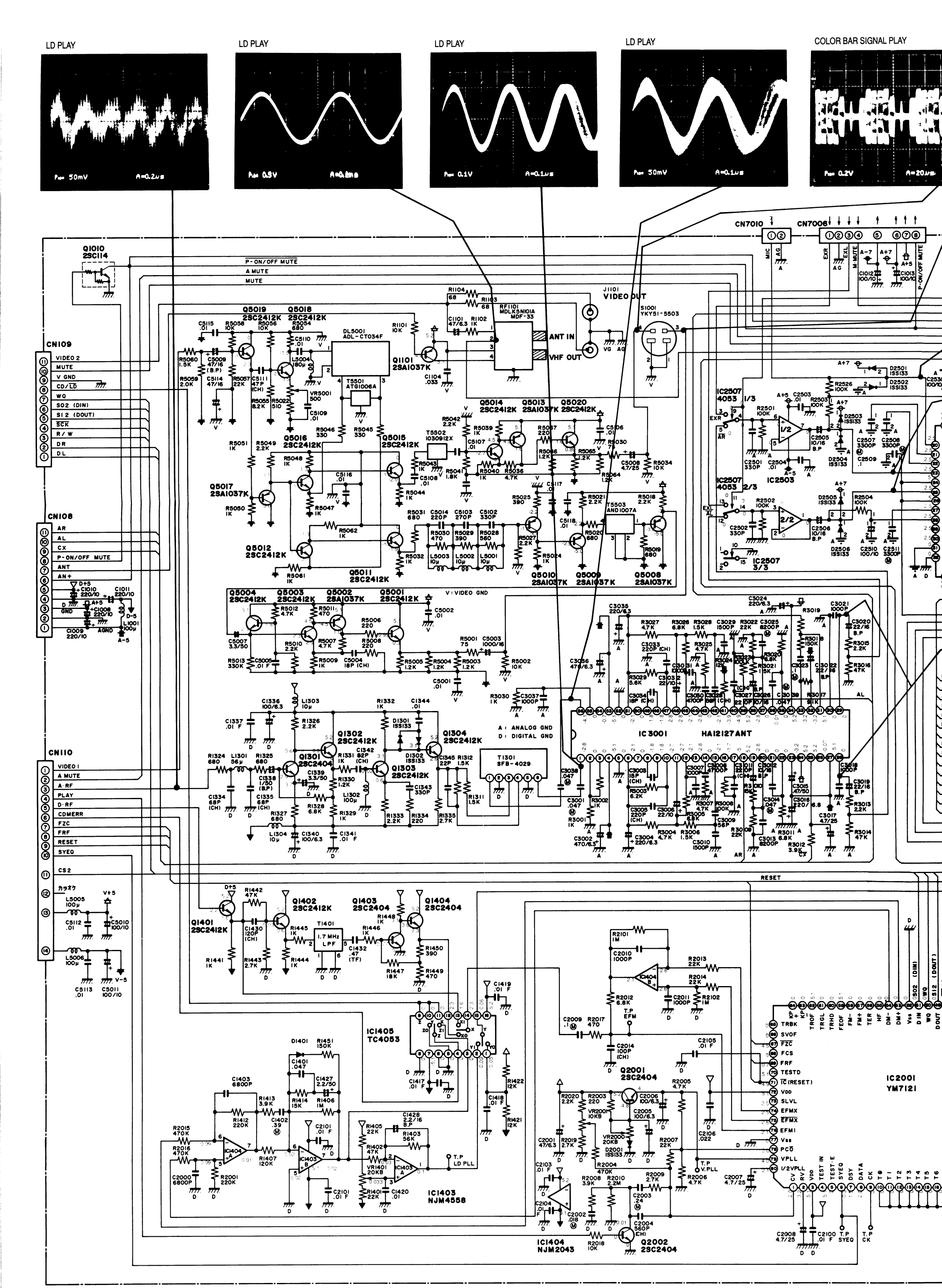
LD PLAY
LD PLAY
LD PLAY
LD PLAY
COLOR BAR SIGNAL PLAY
CN7010
CN7006
CN109
CN108
CN110
Q1010 2SC114
P-ON/OFF MUTE
A MUTE
MUTE
Q5019 2SC2412K
Q5018 2SC2412K
DL5001 ADL-CT034F
T5501 ATG1006A
Q1101 2SA1037K
RF1101 MDLK5N101A MDF-33
ANT IN
VHF OUT
J1101 VIDEO OUT
S1001 YKY51-5503
Q5014 2SC2412K
Q5013 2SA1037K
Q5020 2SC2412K
Q5016 2SC2412K
Q5015 2SC2412K
T5502 1030912X
Q5017 2SA1037K
Q5012 2SC2412K
Q5011 2SC2412K
T5503 AND1007A
Q5010 2SA1037K
Q5009 2SA1037K
Q5008 2SA1037K
IC2507 4053 1/3
IC2503
IC2507 4053 2/3
IC2507 3/3
Q5004 2SC2412K
Q5003 2SC2412K
Q5002 2SA1037K
Q5001 2SC2412K
V: VIDEO GND
A: ANALOG GND
D: DIGITAL GND
IC3001 HA12127ANT
Q1302 2SC2412K
Q1301 2SC2404
Q1303 2SC2412K
Q1304 2SC2412K
T1301 SFB-4029
Q1401 2SC2412K
Q1402 2SC2412K
Q1403 2SC2404
Q1404 2SC2404
T1401 1.7 MHz LPF
IC1405 TC4053
IC1403 NJM4558
IC1404 NJM2043
Q2001 2SC2404
Q2002 2SC2404
IC2001 YM7121
RESET

BAR SIGNAL PLAY

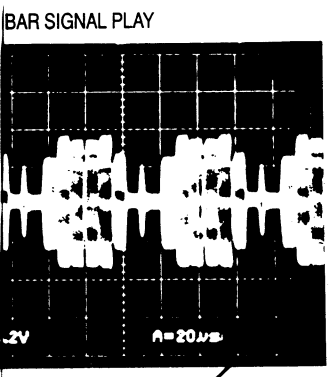

COLOR BAR SIGNAL PLAY

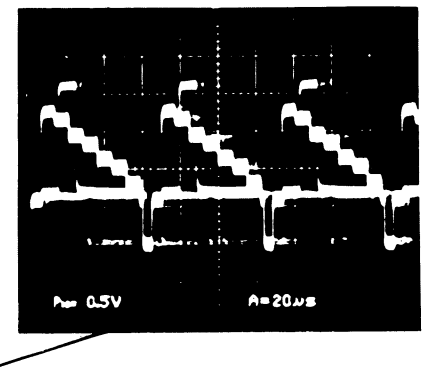

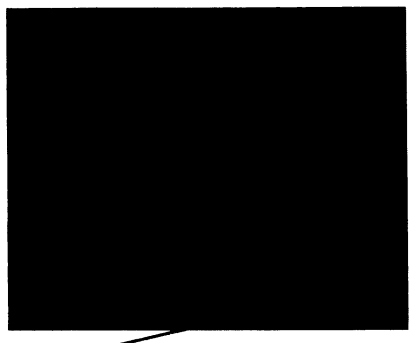

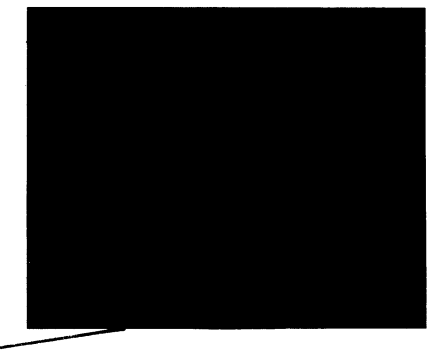

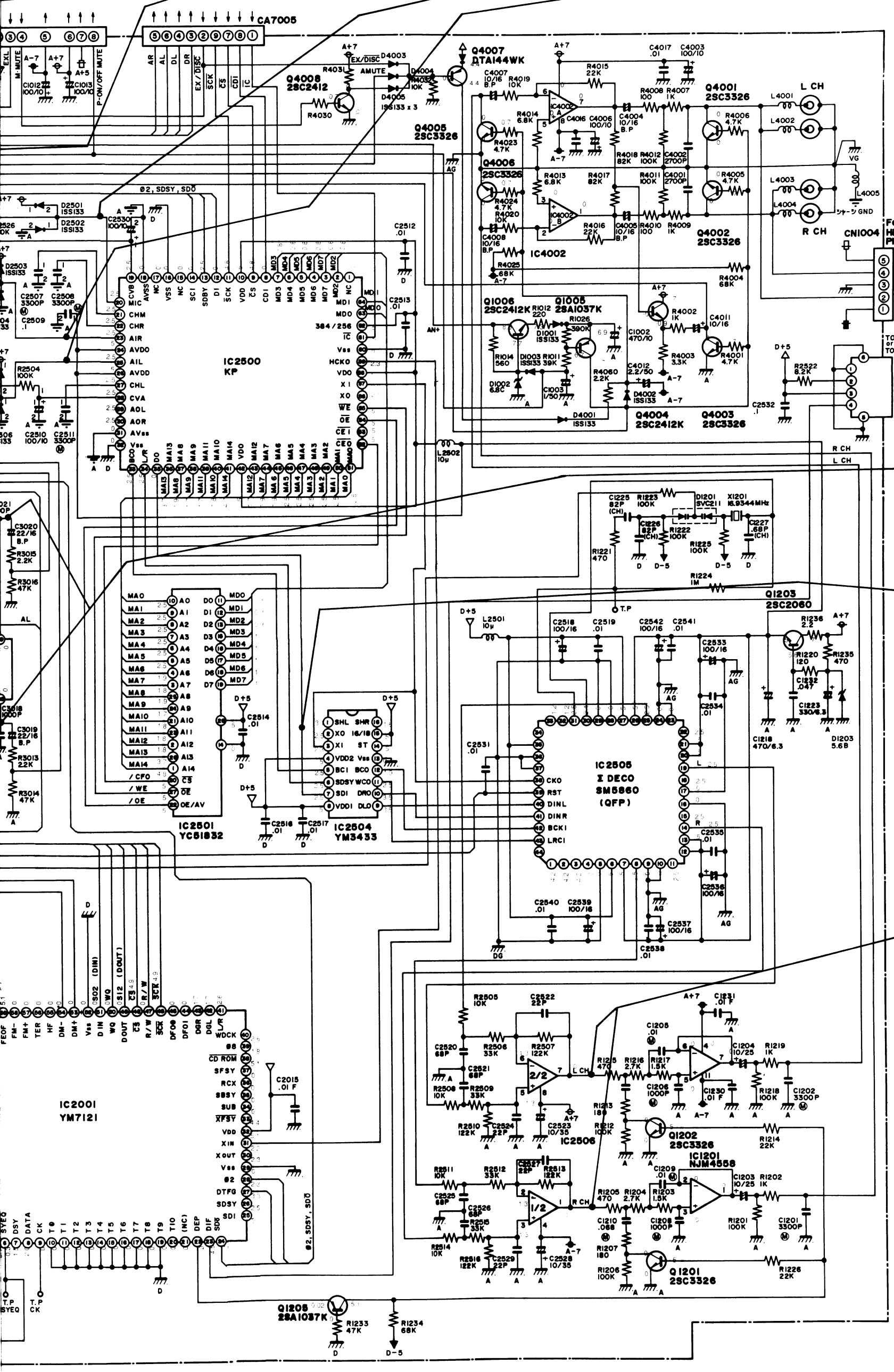

RED No.= At STOP time to Voltage Level

SCHEMATIC DIAG

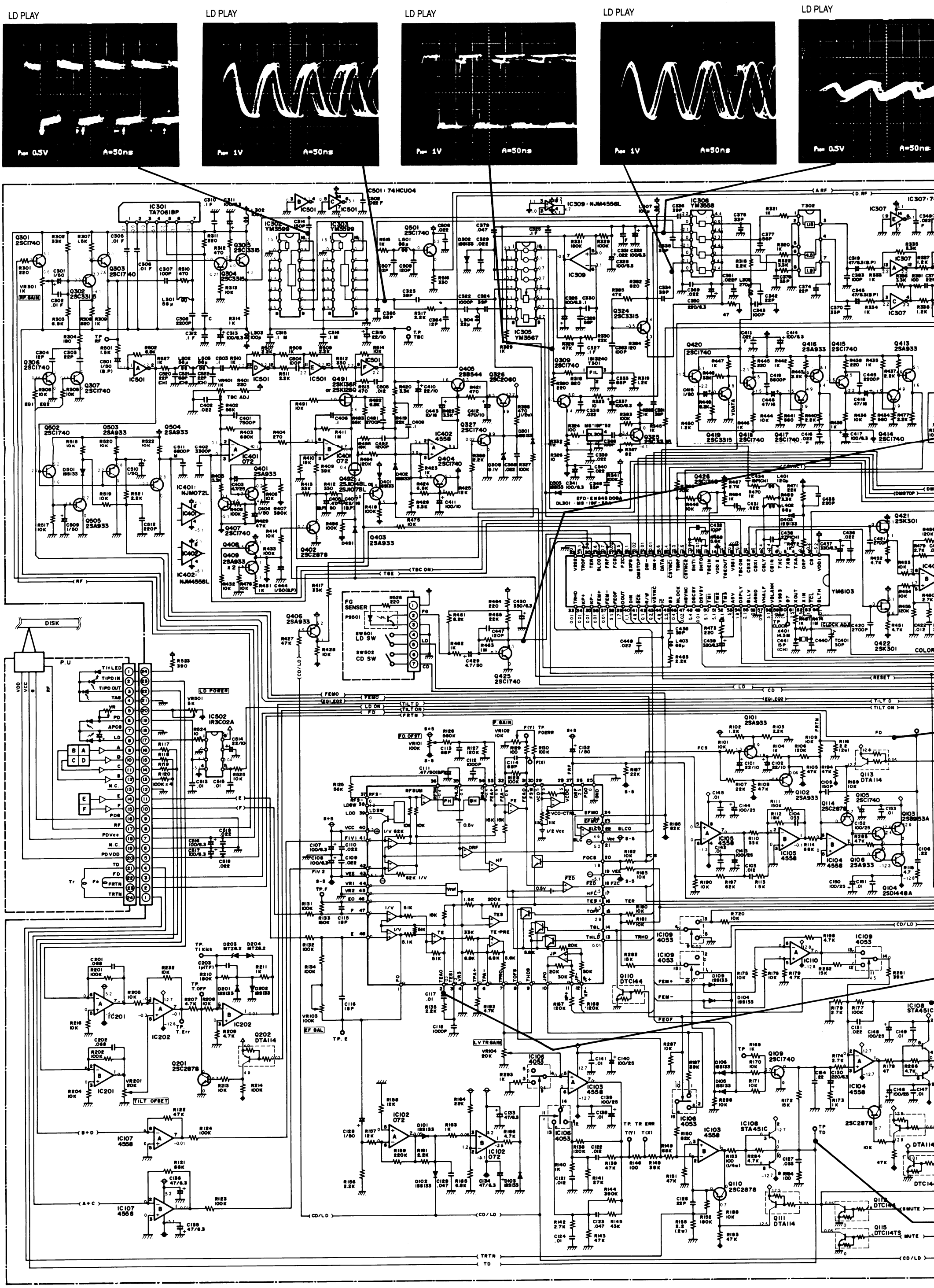

RED No.= At STOP time to Voltage Level

= At PLAY time to Voltage Level
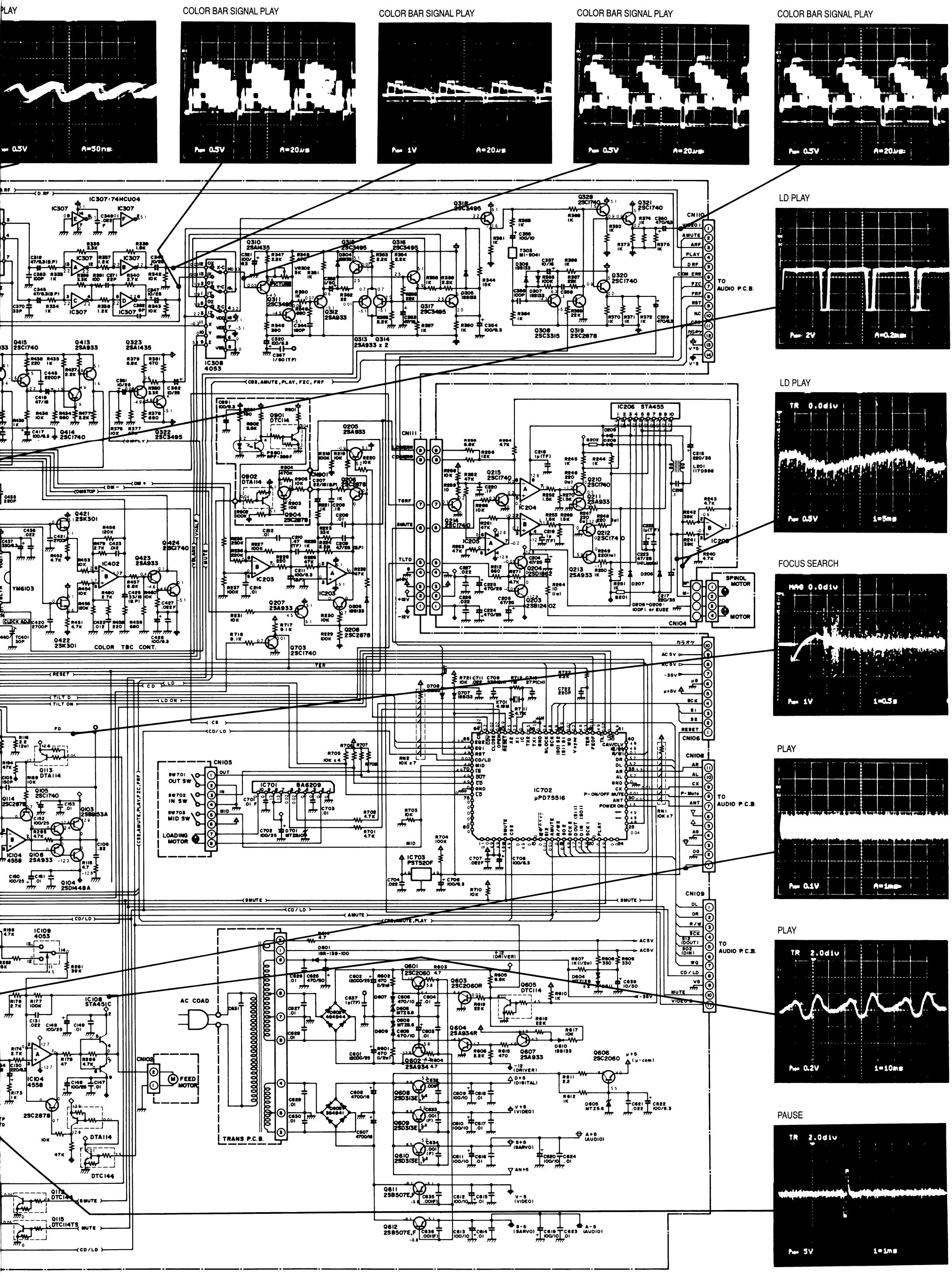
EMATIC DIAGRAM