F1/F2

K2B9002A0022

FUNAI

SERVICE MANUAL

VIDEO CASSETTE PLAYER

F1/F2

VHS
PAL

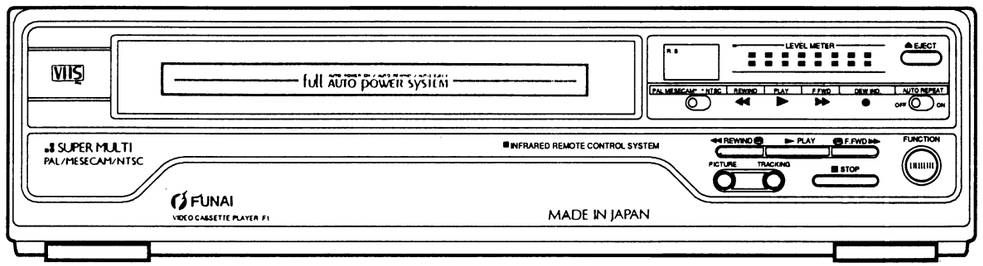

FUNAI ELECTRIC CO., LTD.

CONTENTS

1. SPECIFICATIONS

Test Items	Mode	Nominal	Limit	Test Tape
1. Video Section				
1-1 Output Level	PB	1.0 Vp-p	1.0±0.2 Vp-p	F6-A
1-2 S/N Ratio (Luminance)	PB	45 dB	40 dB	F6-D
1-3 S/N Ratio (Chroma AM)	PB	44 dB	35 dB	F6-E
1-4 S/N Ratio (Chroma PM)	PB	38 dB	31 dB	F6-E
1-5 Resolution	PB	240 Line	230 Line	F6-M
2. Servo Section				
2-1 Wow & Flutter WTD	PB	0.2 %	0.6 %	F6-M
2-2 Jitter Low	PB	0.04 μsec	0.12 μsec	F6-N
3. Audio Section				
3-1 Output Level	PB	−6 dBV	−6 ±4 dBV	F6-A
3-2 S/N Ratio	PB	40 dB	36 dB	F6-A
3-3 Distortion	PB	1.5 %	4.0 %	F6-A
3-4 Freq・resp at 100Hz	PB	−3 dB	−6 dB	F6-K
(-20dBV ref. 1KHz) at 6kHz	PB	−2 dB	−6 dB	F6-K

NOTE : Nominal specs represent the designing specs; all units should be able to approximate these-some will exceed and some may drop slightly below these specs. Limit specs represent the absolute worst condition that still might be considered; in no case should a unit perform to less than within any limit spec.

2. SAFETY CHECK AFTER SERVICING

Examine the area surrounding the repaired location for damage or deterioration. Observe that screws, parts and wires have been returned to original positions. Afterwards, perform the following tests and confirm the specified values in order to verify compliance with safety standards.

1. Insulation resistance test
   Confirm the specified insulation resistance or greater between power cord plug prongs and externally exposed parts of the set (RF terminals, antenna terminals, video and audio input and output terminals, microphone jacks, earphone jacks, etc.). See table below.

2. Dielectric strength test
   Confirm specified dielectric strength or greater between power cord plug prongs and exposed accessible parts of the set (RF terminals, antenna terminals, video and audio input and output terminals, microphone jacks, earphone jacks, etc.). See table below.

3. Clearance distance
   When replacing primary circuit components, confirm specified clearance distance (d), (d') between soldered terminals, and between terminals and surrounding metallic parts. See table below.

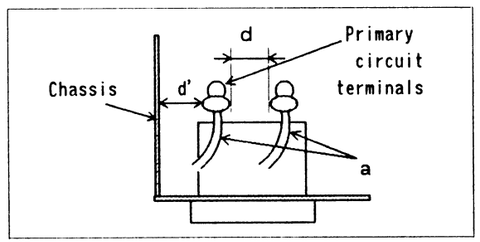

Table 1. : Ratings for selected areas

AC Line Voltage	Region	Insulation Resistance	Dielectric Strength	Clearance Distance (d) (d')
110 to 130 V	USA & Canada	---	900 V 1minute	≧3.2 mm
* 110 to 130 V	Europe	≧10 MΩ	3 kV 1minute	≧4 mm (d)
200 to 240 V	Australia	/500 V DC		≧6 mm (d')

* Class II model only.

Note: This table is unofficial and for reference only. Be sure to confirm the precise values for your particular country and locality.

4. Leakage current test

Confirm specified or lower leakage current between B (earth ground, power cord plug prongs) and externally exposed accessible parts (RF terminals, antenna terminals, video and audio input and output terminals, microphone jacks, earphone jacks, etc.).

Measuring Method : (Power ON)
Insert load Z between B (earth ground, power cord plug prongs) and exposed accessible parts.
Use an AC voltmeter to measure across both terminals of load Z.
See figure and following table.

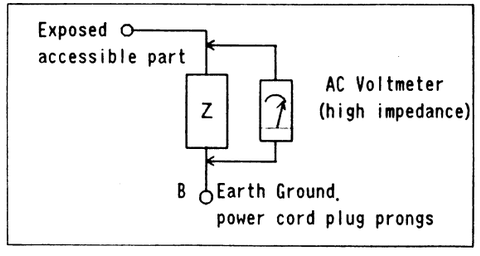

Table 2 : Leakage current ratings for selected areas

AC Line Voltage	Region	Load Z	Leakage Current(i)	Earth Ground (B) to:
110 to 130 V	USA & Canada	0.15 μF, 1.5 k	1≦0.5 mA rms	Exposed accessible parts
110 to 130 V 200 to 240 V	Europe Australia	2 kΩ	1≦0.7 mA peak 1≦2 mA dc	Antenna terminals
		50 kΩ	1≦0.7 mA peak 1≦2 mA dc	Other terminals

Note: This table is unofficial and for reference only. Be sure to confirm the precise values for your particular country and locality.

3. IMPORTANT SAFETY PRECAUTIONS

Prior to shipment from the factory, our products are strictly inspected to conform the recognized product safety and electrical codes of the countries in which they are to be sold. However, in order to maintain such compliance, it is equally important to implement the following precautions when a set is being serviced.

● Precautions during Servicing

1. Locations requiring special caution are denoted by labels and inscribed on the cabinet, chassis and certain parts of the product. When performing service, be sure to read and comply with these and other cautionary notices appearing in the operation and service manuals.

2. Parts identified by the ⚠ symbol parts are critical for safety.
   Replace only with specified part numbers.

3. Use specified internal wiring. Note especially :
   1) Wires covered with PVC tubing
   2) Double insulated wires
   3) High voltage leads

4. Use specified insulating materials for hazardous live parts. Note especially :
   1) Insulation Tape
   2) PVC tubing
   3) Spacers
   4) Insulation sheets for transistors

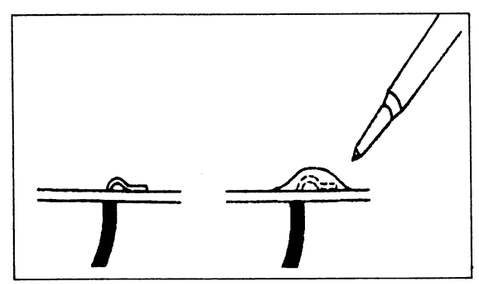

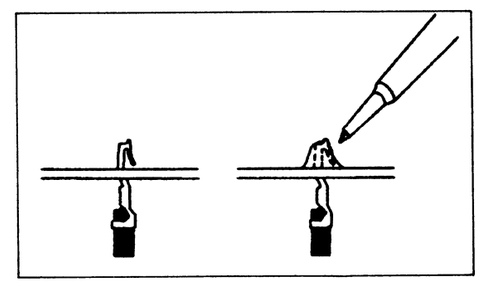

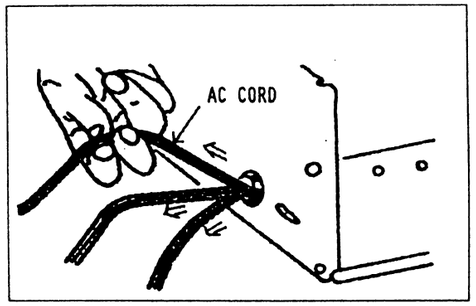

5. When replacing AC primary side components (transformers, power cords, noise blocking capacitors, etc.) wrap ends of wires securely around the terminals before soldering.

6. Observe that wires do not contact heat producing parts (heat sinks, oxide metal film resistors, fusible resistors, etc.)

7. Check that replaced wires do not contact sharp edged or pointed parts.

8. When a power cord has been replaced, check that 10-15 kg of force in any direction will not loosen it.

9. Also check areas surrounding repaired locations.

4. DISASSEMBLY INSTRUCTIONS (SET)

1. Top Case Removal

   - Remove 3 screws (A). (Fig. 1)

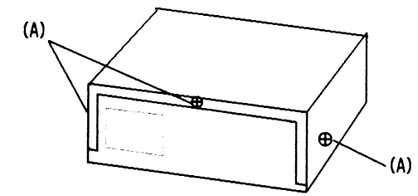

(Fig. 1 Rear)

2. Bottom Panel Removal

   - Remove 7 screws (B). (Fig. 2)

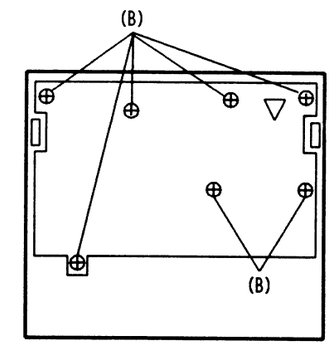

(Fig. 2 Bottom View)

3. Front Ass'y Removal

   - Unfasten 6 hooks (C) from Cabinet top and bottom. (Figs. 3 and 4)

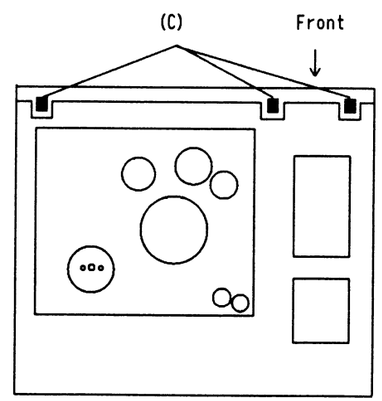

(Fig. 3 Bottom View)

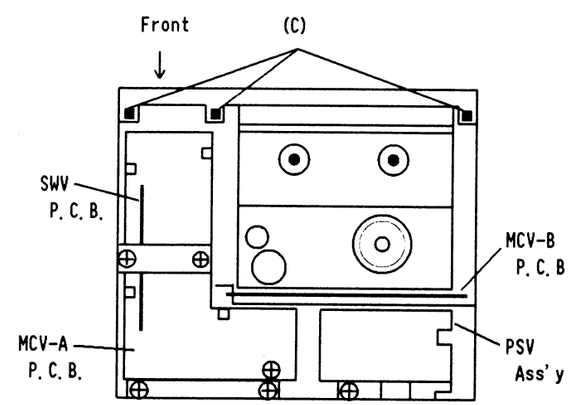

(Fig. 4 Top View)

4. MCV-A P. C. Board Removal

- Remove 3 screws (D).
- Remove 2 screws (E).
- Unfasten 4 hooks (F) from Cabinet. (Fig. 5)

5. Power Supply Ass'y Removal

- Remove 1 screw (G). (Fig. 5)

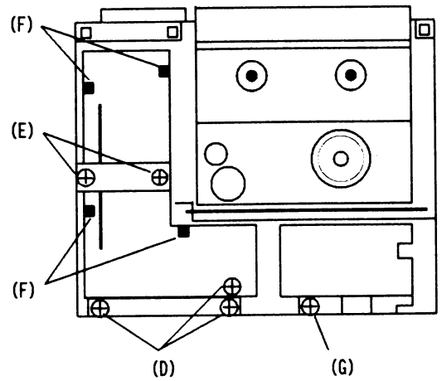

(Fig. 5 Top View)

6. MCV-B P. C. Board Removal

- Unfasten 2 hooks (H). (Fig. 6)

7. Deck Ass'y Removal

- Remove 3 screws (I). (Fig. 6)

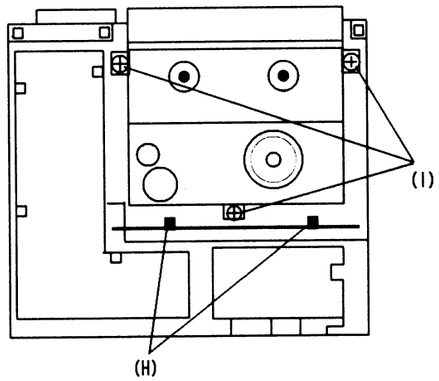

(Fig. 6 Top View)

8. MCV-C P. C. Board Removal

- Unfasten 2 hooks (J) from Main Cabinet. (Fig. 7)

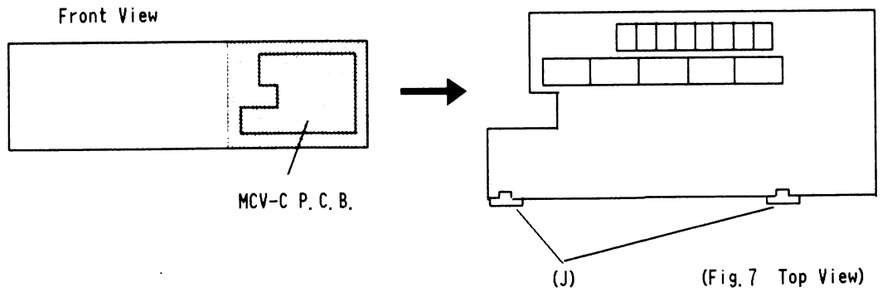

(Fig. 7 Top View)

5. DISASSEMBLY INSTRUCTIONS (DECK)

(1) Front Loading Unit (Fig. 2-1)

1. Remove Front Loading Belt (A) from Front Loading Clutch Ass'y (A').
2. Remove 4 screws (B).
3. Take off Left side hook (C) and Right side hook (D).
   (To unfasten the hook, lift up front edge of the Front Loading Unit and take it forward.)

(2) Cassette Load Bracket Ass'y (Fig. 2-1)

1. Remove screw (E).
2. Take off the Cassette Load Bracket Ass'y (F).

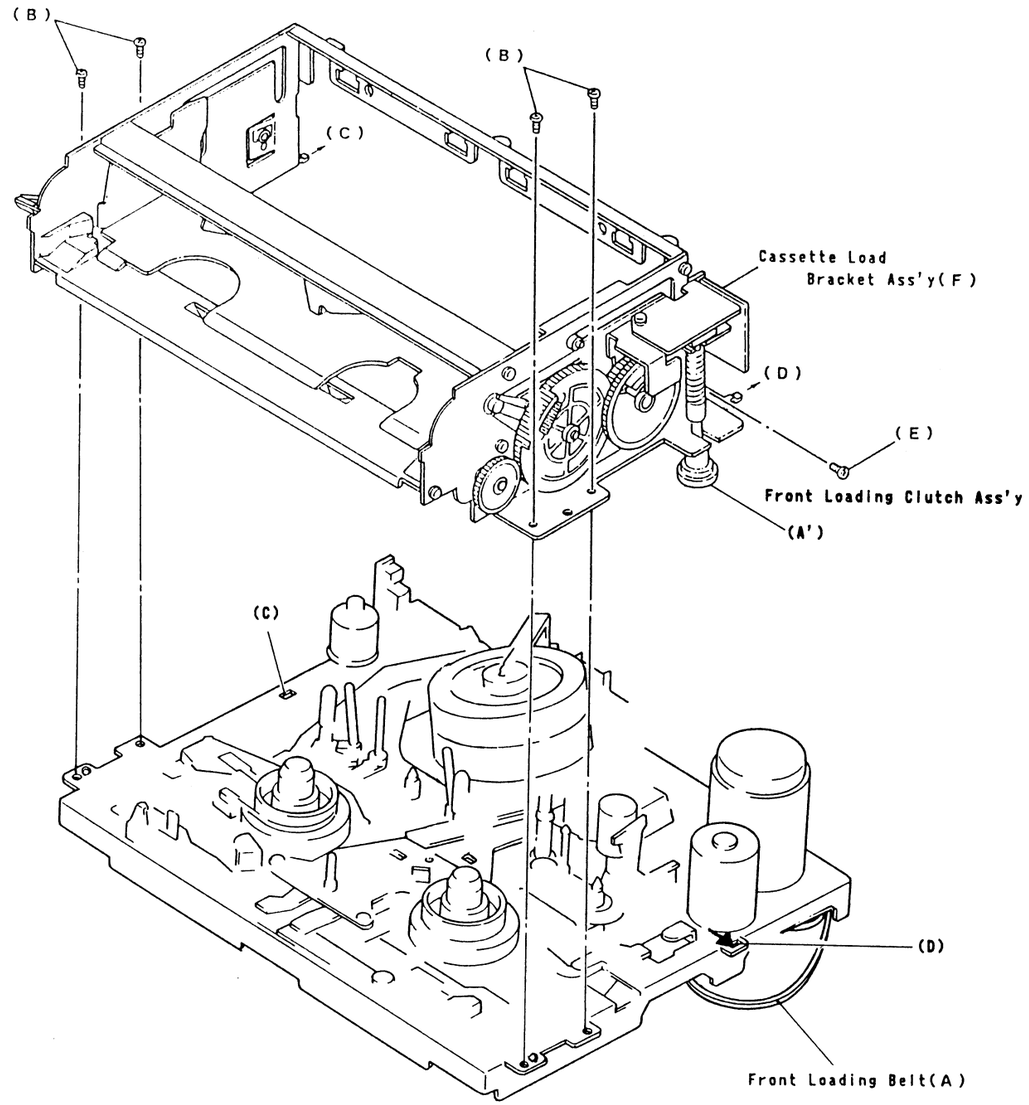

Fig. 2-1

(3) Photo Sensor (Fig. 2-2)

1. Replacement of Lamp Holder Ass'y (A).
   (1) Remove screw (B), move away the Take-up Soft Brake Ass'y (D).
   (At this time, do not take off the spring (C).)
   (2) Hold Lamp Holder Ass'y (A) and pull up to remove the hook (E) from the chassis.
   (3) Turn the Lamp Holder Ass'y (A) counterclockwise and take out the Lamp Holder Ass'y (A).
2. Start Sensor replacement of sensor PCB PM Ass'y (H).
   (1) Remove screw (F) and take off the Front Loading PCB Ass'y (I).
   (2) Remove screw (G) and take off the Sensor PCB RM Ass'y (H).
3. End Sensor replacement of sensor PCB LM Ass'y (J).
   (1) Remove screw (G) and take off the Sensor PCB LM Ass'y (J).

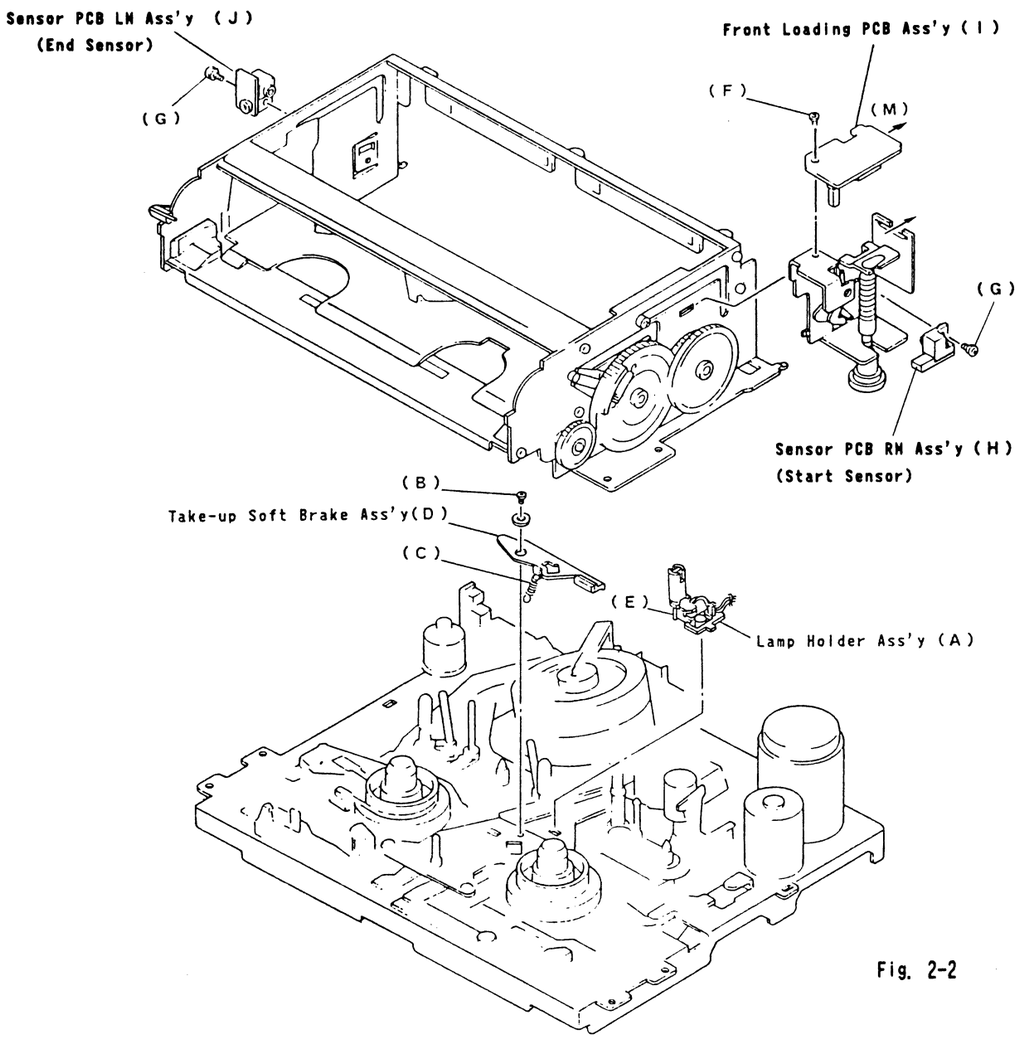

Fig. 2-2

(4) Full Erase Head / Audio Control Head (Fig. 2-3)

1. Erase Head
   (1) Remove Nut (A).
   (2) Remove Spring (B).
   (3) Take out the Impedance Roller (C), and pull up the Full Erase Head Plate Ass'y (D).
   (Take care not to lose parts (E) (F) (G) (H) at the time of the Full Erase plate removal.)
   (4) Remove screw (I) and take off the Full Erase Head (J).
2. Audio / Control Head
   (1) Remove screw (K), (L) and Azimuth Spring (M).
   (2) Remove Audio/Control Head (N).

Note: When reinstalling the Full Erase Head/Audio Control Head Unit, mechanical adjustments should be performed for proper operation. (Fig. 2-3)

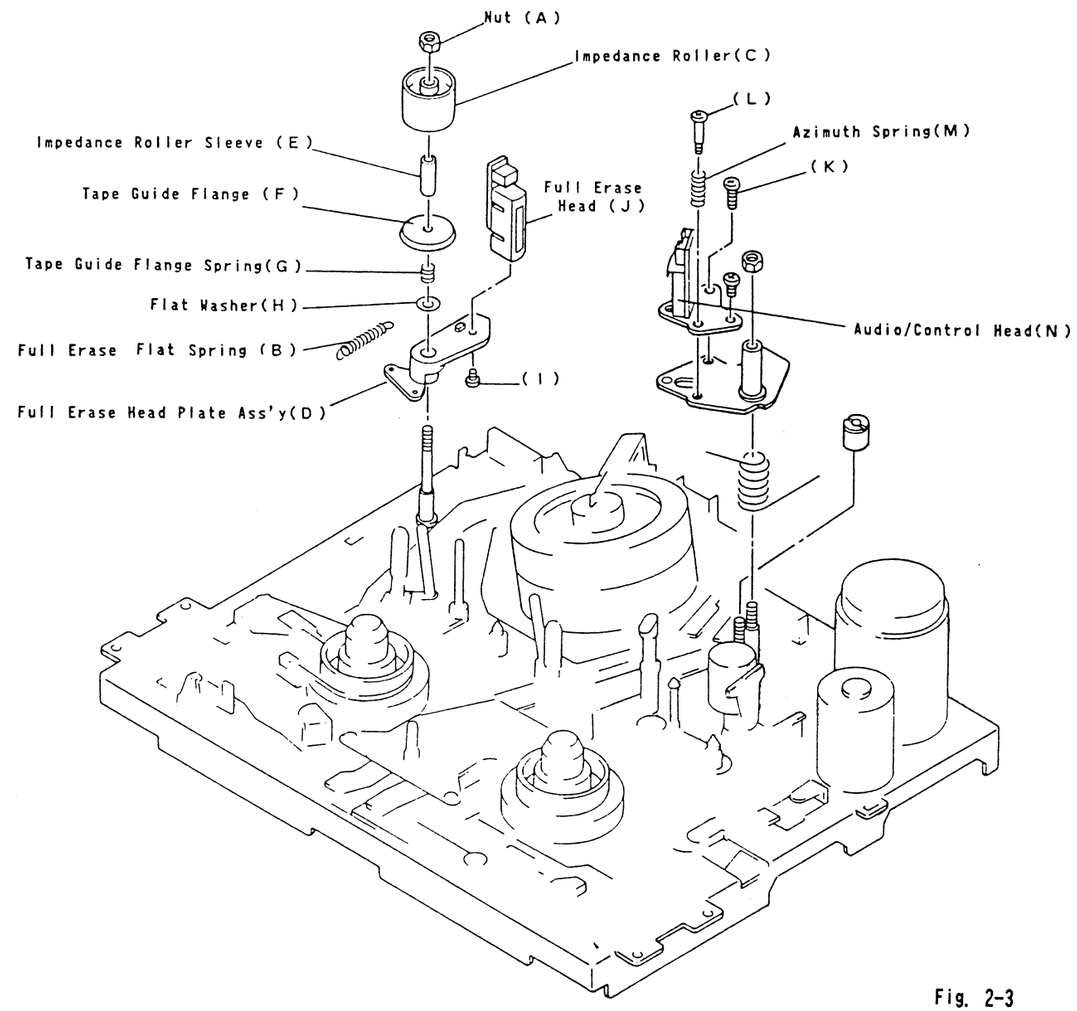

Fig. 2-3

(8) Drum Ass'y (Fig. 2-7)

1. Remove the Front Loading Unit (2. (1) on page 2-1).
2. Disconnect the Drum Motor PCB Ass'y (A) from the stator (B).
3. Remove screw (E) and take off the Drum Ground (F).
4. Remove 3 screws (C) and take off the Drum Ass'y (D).

Note:

Take off the Drum Ass'y (D) carefully so as not to scratch or damage. (Fig. 2-7)

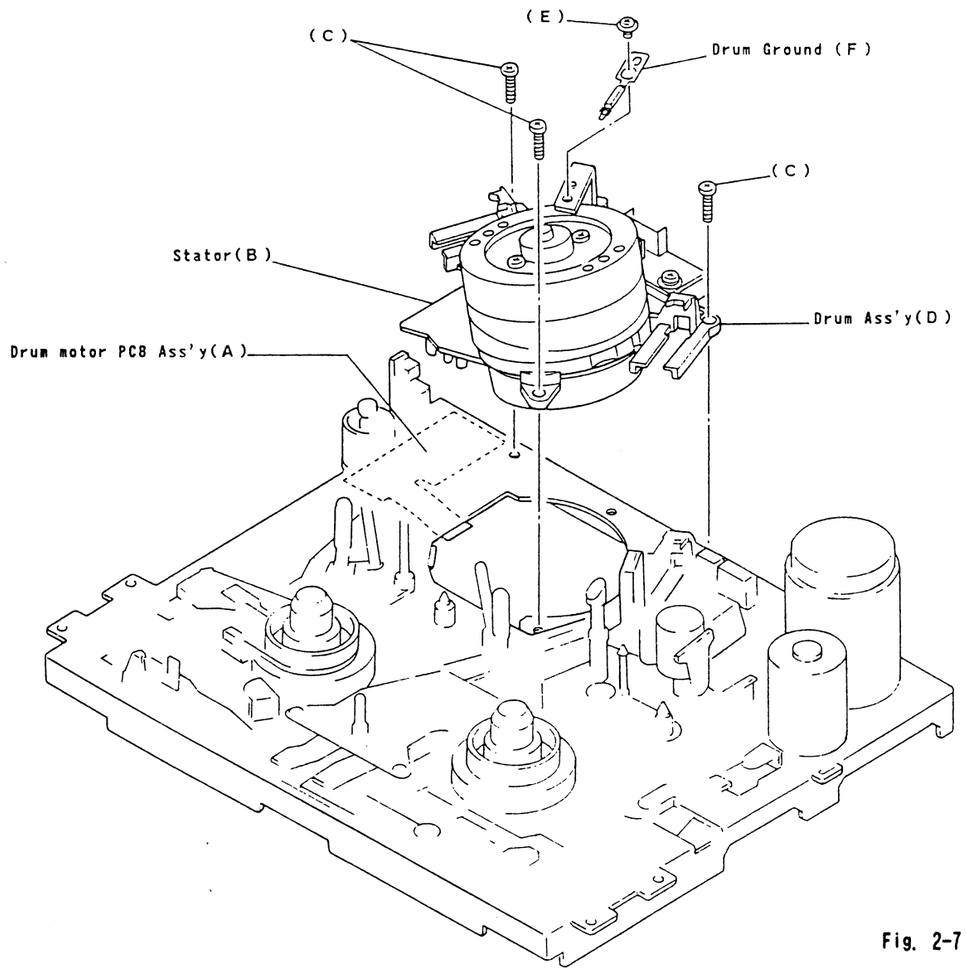

Fig. 2-7

(9) Upper Drum / Reinstallation Upper, Lower Drums and Rotor (Fig. 2-8)

1. Remove the Front Loading Unit (2. (1) on page 2-1).
2. Remove screw (A) and take off the Drum Ground Bracket (B).
3. Remove 2 screws (C) and take off the Upper Drum (D).

Note:

1. Use gloves and do not touch the drum surface with bare fingers.
2. If the Video Head is defective, replace the upper drum along with the Head. (Fig. 2-8)

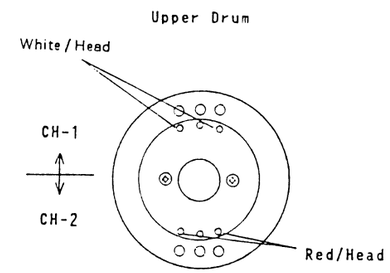

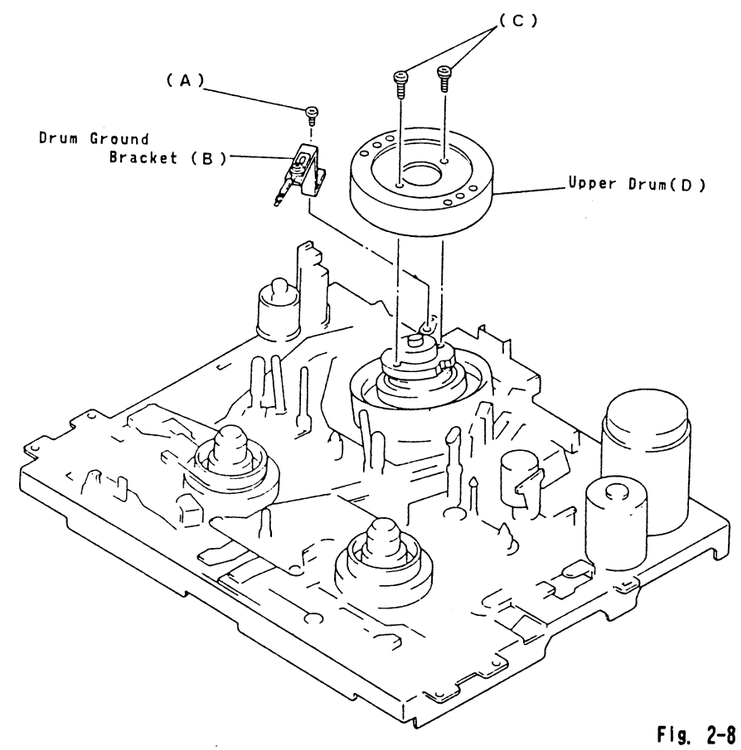

Fig. 2-8

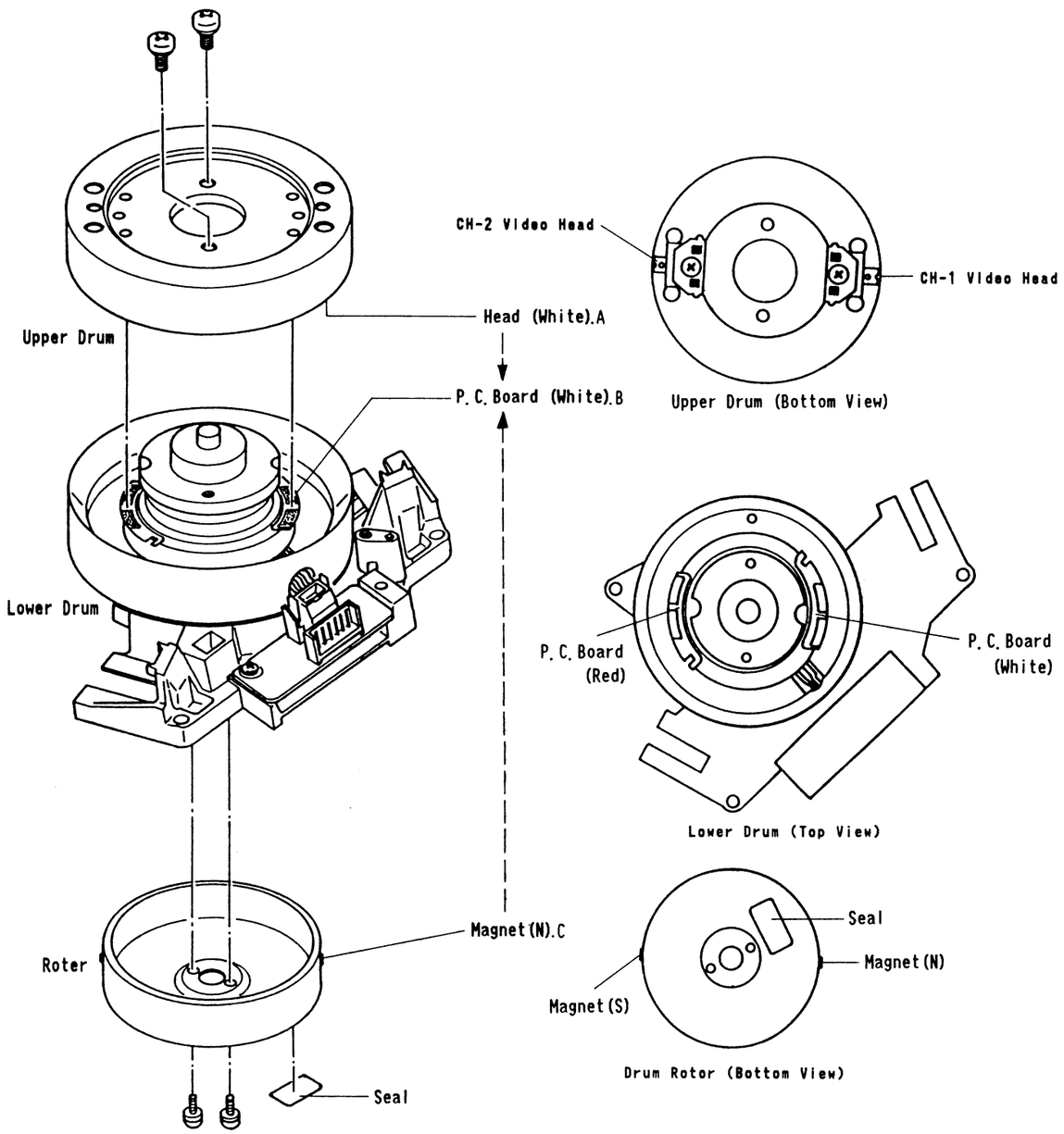

≡Note≡

For Upper Drum point-A, Lower Drum point-B and Rotor point-C, theses Point A, B, C, must lineup each other.
If not so, the problem may cause.

(10) Drum Motor (Fig. 2-10)

1. Disconnect the Drum Motor PCB Ass'y (A) from the Stator (F).
2. Remove 2 screws (C), and take off the Rotor (D).
3. Remove 3 screws (E), and take off the Stator (F).

Note:

When you reinstall the Roter. You must align the Rotor magnet (N) with the white CH-1 video head. (See Page 2-8.)

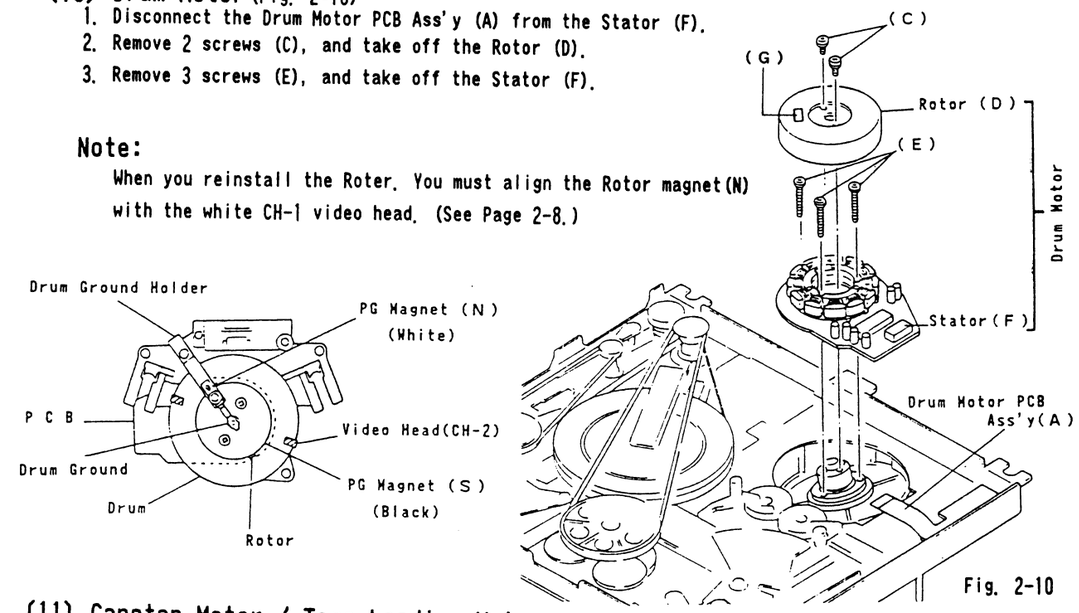

Fig. 2-10

(11) Capstan Motor / Tape Loading Motor (Fig. 2-11)

1. Capstan Motor
   (1) Take off the Drive Belt (A) and Main Belt (B) from the Capstan Motor's Pulley (H).
   (2) Remove 2 screws (C), and take off the Capstan Motor (D).
2. Tape Loading Motor
   (1) Take off the Tape Loading Belt (E) from the Tape Loading Motor's Pulley (I).
   (2) Remove 2 screws (F), and take off the Tape Loading Motor (G).

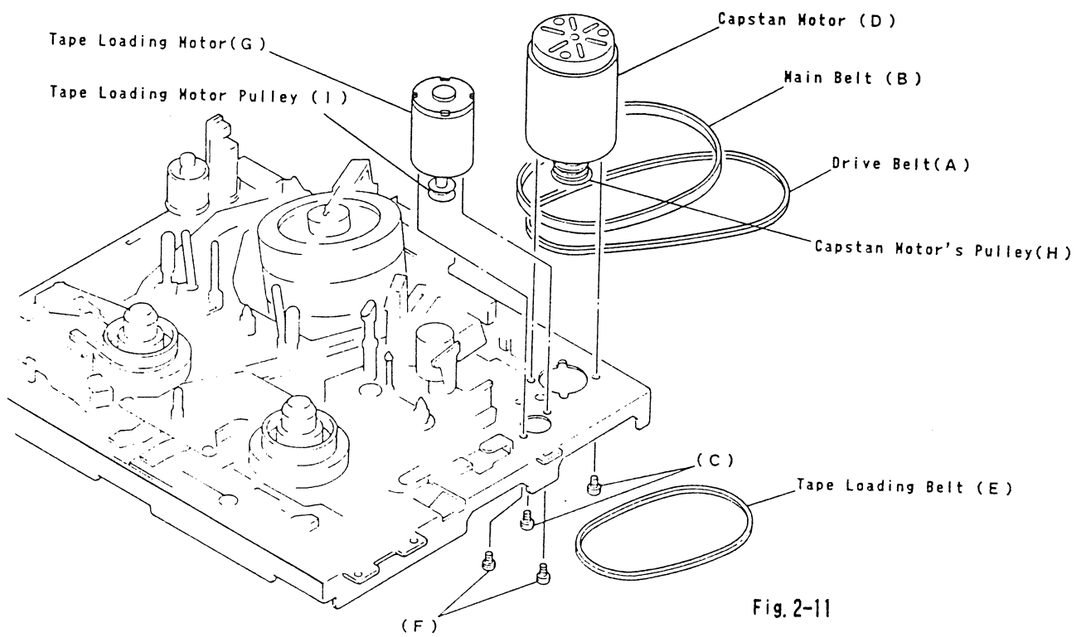

Fig. 2-11

(12) Loading Cam Gear (Fig. 2-12)

1. Take off the Loading Belt (A) from the Loading Pulley (B).
2. Remove Polyslider Washer (C), and take off the Loading Pulley (B).
3. Remove Polyslider Washer (D), and take off the Loading Gear (E).
4. Remove Polyslider Washer (F), and take off the Eject Actuator (H) and the Brake Actuator (G).
5. Remove 2 screws (I), and take off the Loading Protector (J) and the Loading Lever (K).
6. Take off the Loading Cam Gear (L).

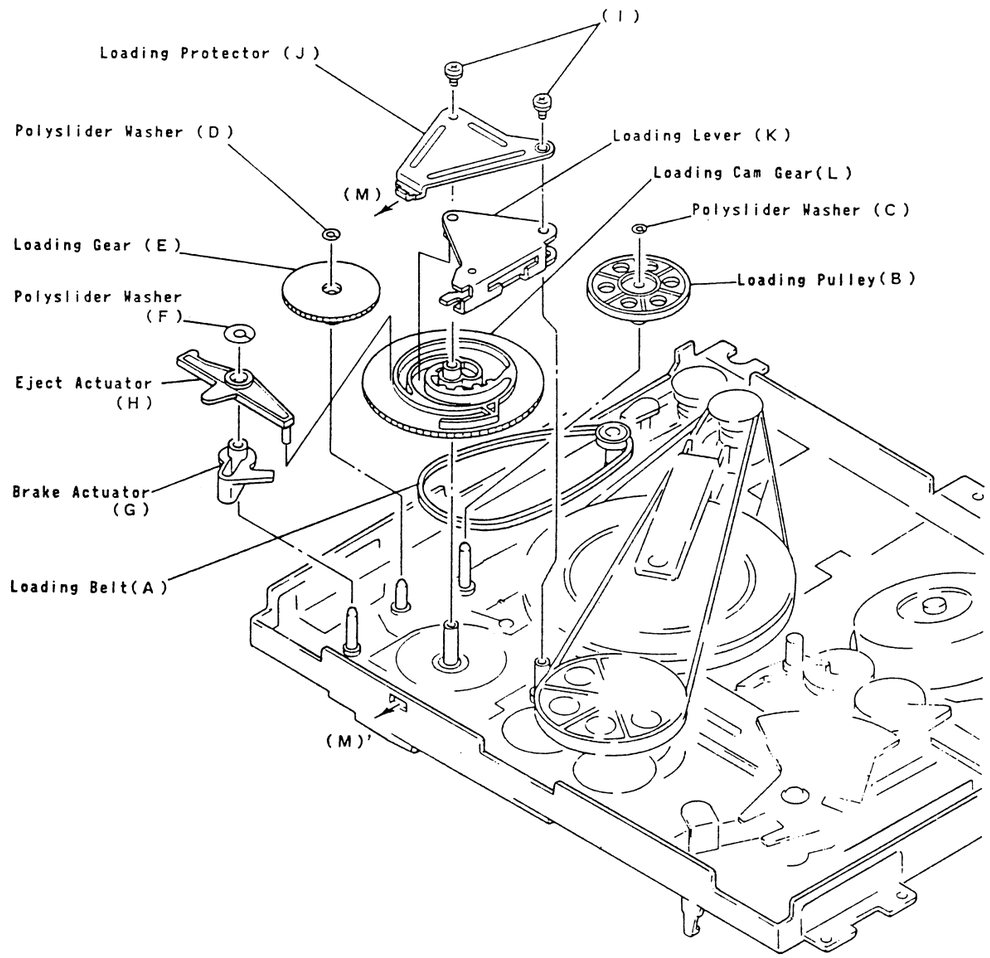

Fig. 2-12

(13) Capstan Flywheel / Return Arm (Fig. 2-13)

1. Remove the Washer (A).
2. Take off the Drive Belt (B) and Main Belt (C).
3. Remove 2 screws (D), and Take off the Flywheel Angle Ass'y (E).
4. Take off the Capstan Flywheel (F).
5. Remove Polyslider Washer (H).
6. Take off the Middle Pulley Ass'y (I).
7. Remove Polyslider Washer (J).
8. Take off the Return Gear (K) and Return Arm (L).

Note:

Do not lose the Washer (A) and (G) when pulling out the Capstan Flywheel. (Fig. 2-13)

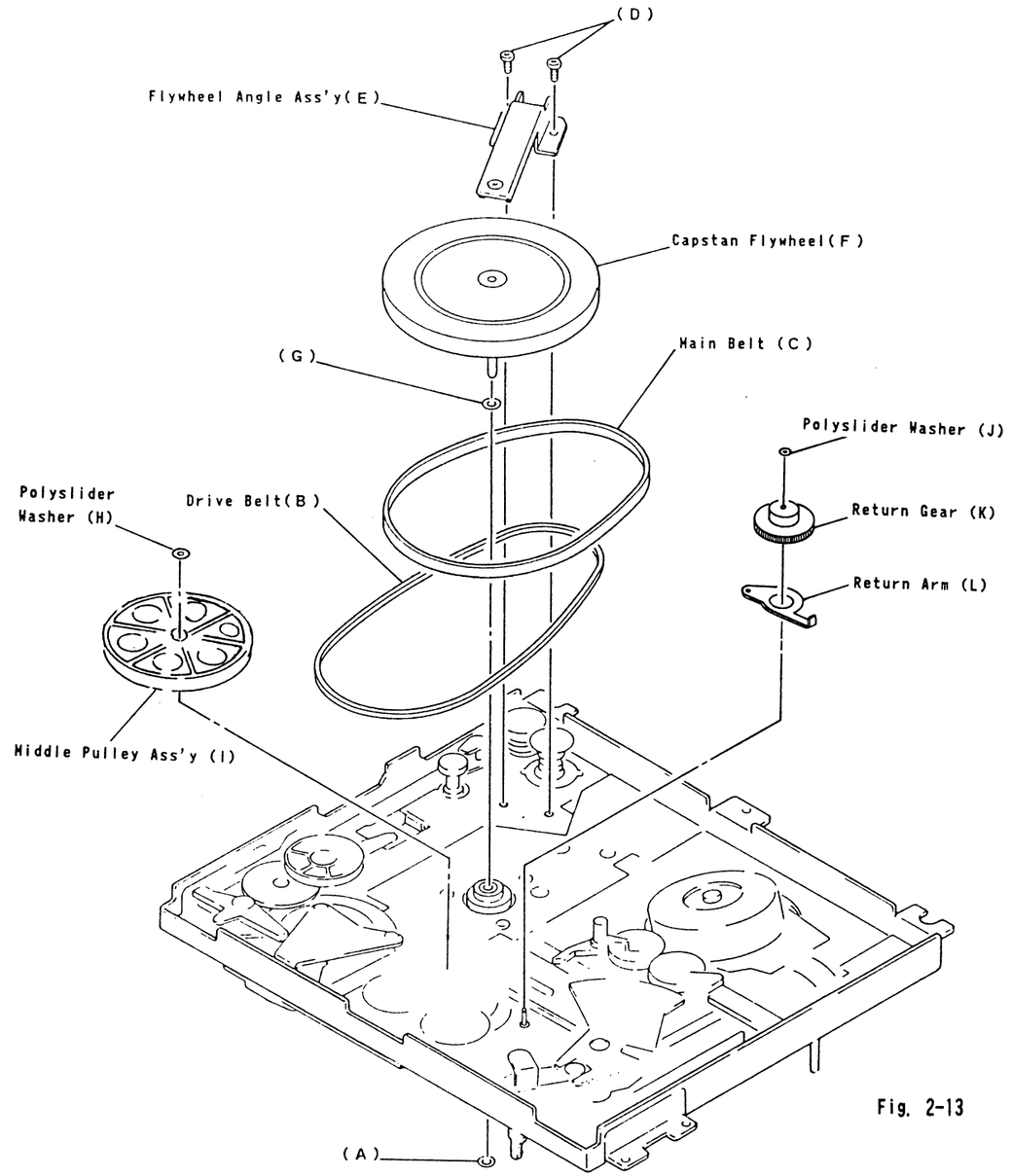

Fig. 2-13

(14) Reel Sensor (Fig. 2-14)

1. Remove Front Loading Unit (2. (1) on page 2-1) and the Gear Holder Ass'y (2. (5) on page 2-4).
2. Remove Take-up Reel (A).
3. Remove Reel Sensor (B). (Unsolder (C), (D) from bottom.)

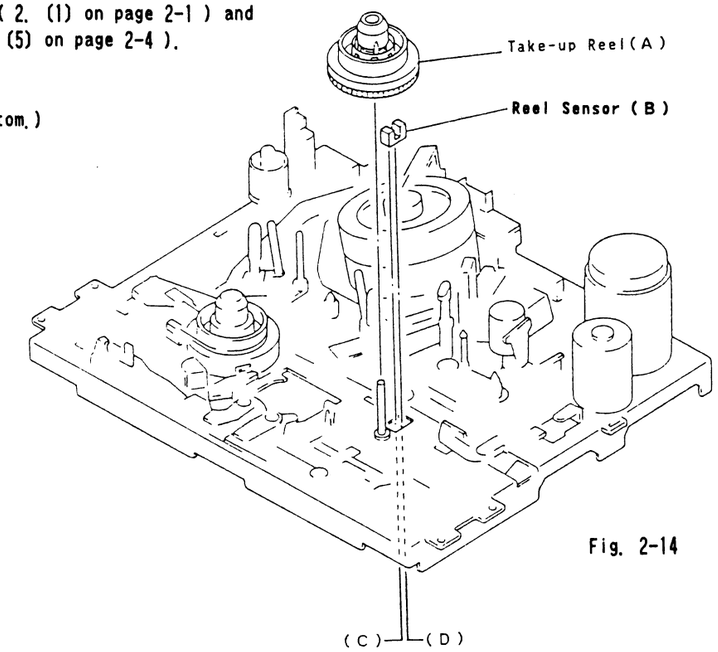

Fig. 2-14

(15) Loading Base (Fig. 2-15)

1. Remove Drum Ass'y, Tension Arm Ass'y and Photo Sensor. (Sensor Lamp)
2. Remove screw (A) and Loading Gear Plate Collar (B), Loading Gear Plate (C).
3. Remove 2 screws (D).
4. Take off the Loading Base (E).

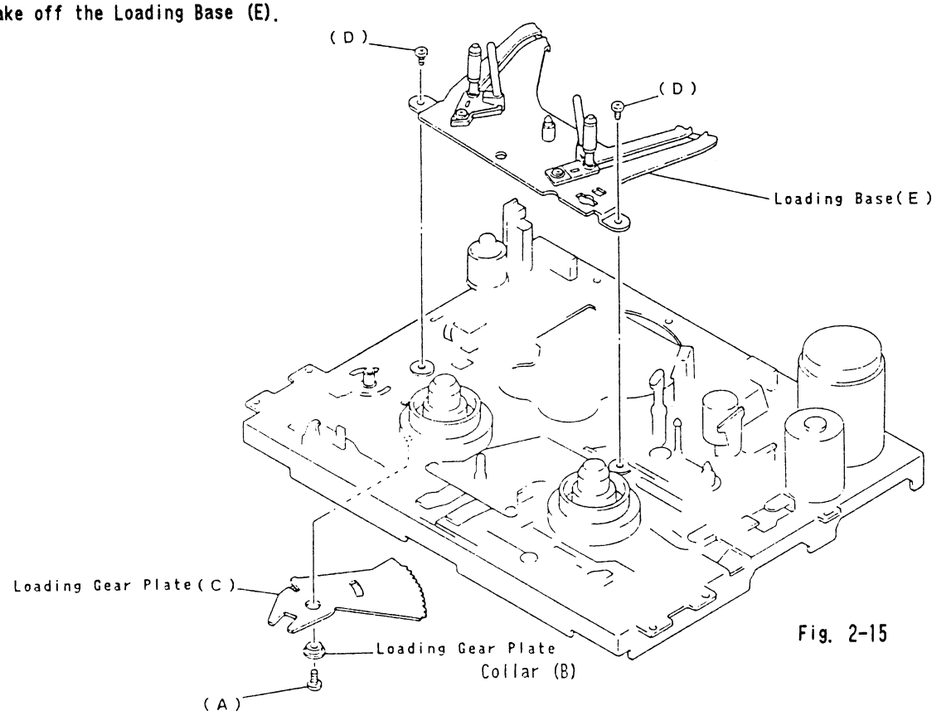

Fig. 2-15

(16) Front Loading Wormwheel Unit (Fig. 2-16)

1. Disassembly
   (1) Remove Front Loading Belt and Bracket Ass'y. (See the Page 2-1 (2))
   (2) Remove E-Ring (A).
   (3) Remove Wormwheel Ass'y (B). (Wormwheel, Friction Spring, Friction Gear)
2. Assembly
   (1) Turn the Lift Gear (C) fully counterclockwise.
   (2) Restore Wormwheel Ass'y (B) to the stud.

Note:

Align the Lift Gear (C) Hole with Wormwheel Hole as illustrated. (Fig. 2-17)

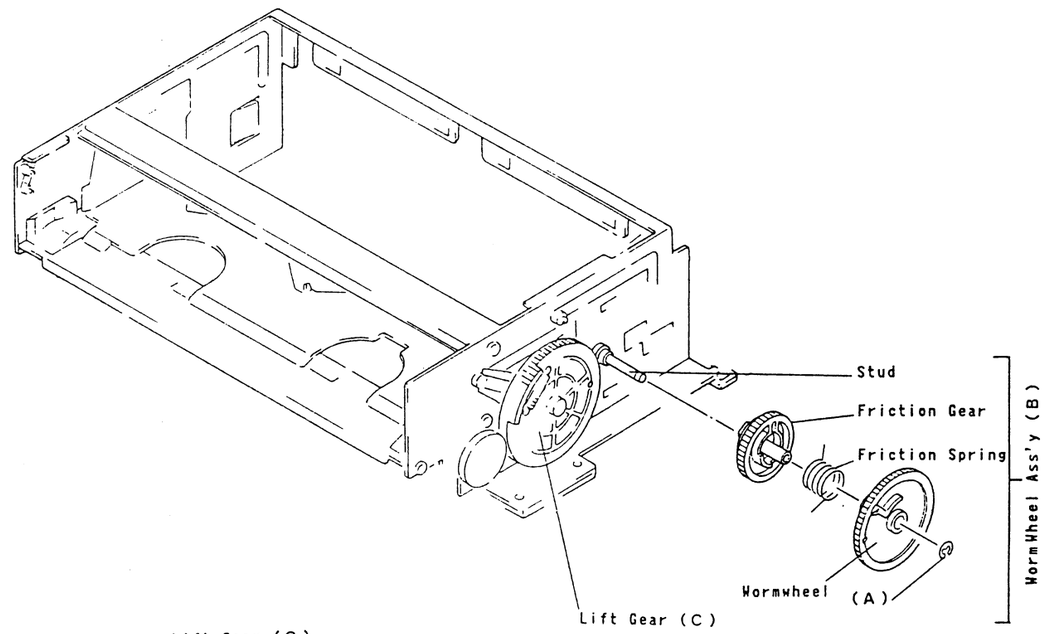

Fig. 2-16

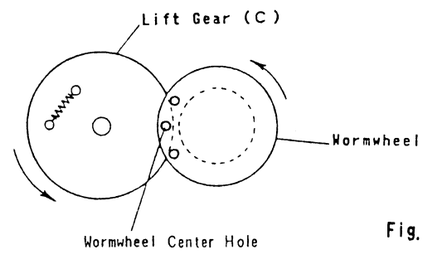

Fig. 2-17

6. STANDARD MAINTENANCE

1. Service schedule of components

○:Check ●:Change

Deck		Periodic Service Schedule			
Ref. No.	Parts Name	1000 hr.	2000 hr.	3000 hr.	4000 hr.
2	Upper Drum	○	●	○	●
134	Pinch Roller(A)		●		●
171	Capstan Motor Assembly		●		●
229	Clutch Assembly		●		●
281	LM Assembly			●	
173	Main Belt		●		●
196	Back Tension Band		●		●
233	Drive Belt		●		●
251	Brake Shoe		●		●
285	Loading Belt		●		●
373	Front Loading Belt		●		●
14 19	Flat Spring, Drum Ground Drum Ground			● ●	
82	ACE Head			●	
92	Full Erase Head (except Play Only Model)			●	
121	Reel Assembly			●	

Note:

1. Clean all parts for the tape transport.
   Upper Drum with video head / Pinch Roller
   Audio Control Head / Full Erase Head

2. After cleaning the parts, perform all DECK ADJUSTMENTS.

3. Must replace two parts No. 14 and No. 19 at a time.

2. Cleaning

1. Cleaning of Video Head

Head cleaning by using a Head Cleaning Stick.

=Procedure =

(1) Remove the top cabinet.
(2) Put on a glove(thin type) to avoid touching the upper drum and lower drum with bare hand.
(3) Put a few drops of alcohol on the Cleaning Stick, and by slightly placing it against the head tip, allow the upper drum to turn the right and left.

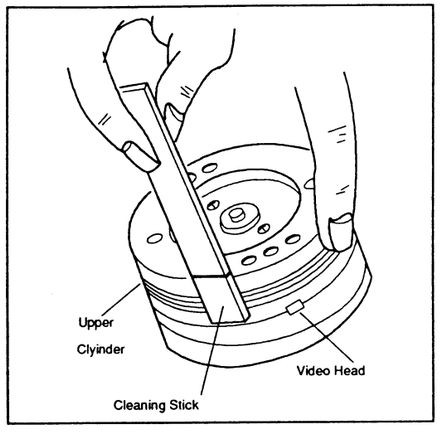

= Note =

(1) The video head is very hard material, but since it is very thin, avoid cleaning it vertically.
(2) Wait for the cleaned part to dry out before operating the unit.
(3) Do not reuse the stained Head Cleaning Stick.

2. Cleaning of Audio Control Head

Head cleaning by using a Head Cleaning Stick.

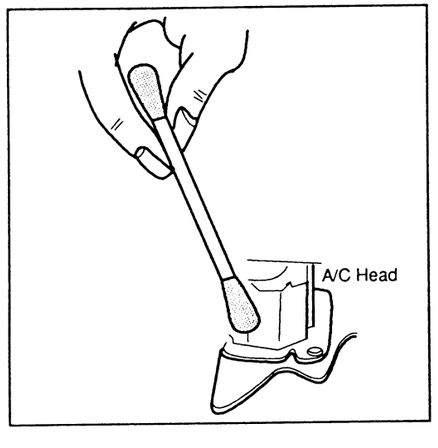

=Procedure =

(1) Remove the Top Cabinet.
(2) Put a few drops of alcohol on the Cleaning Stick. Clean up the audio control head, being careful not to damage the upper drum and other tape running parts.

= Note =

(1) Avoid cleaning audio control head vertically.
(2) Wait for the cleaned part to dry well, before operating the unit.

7. BLOCK DIAGRAM

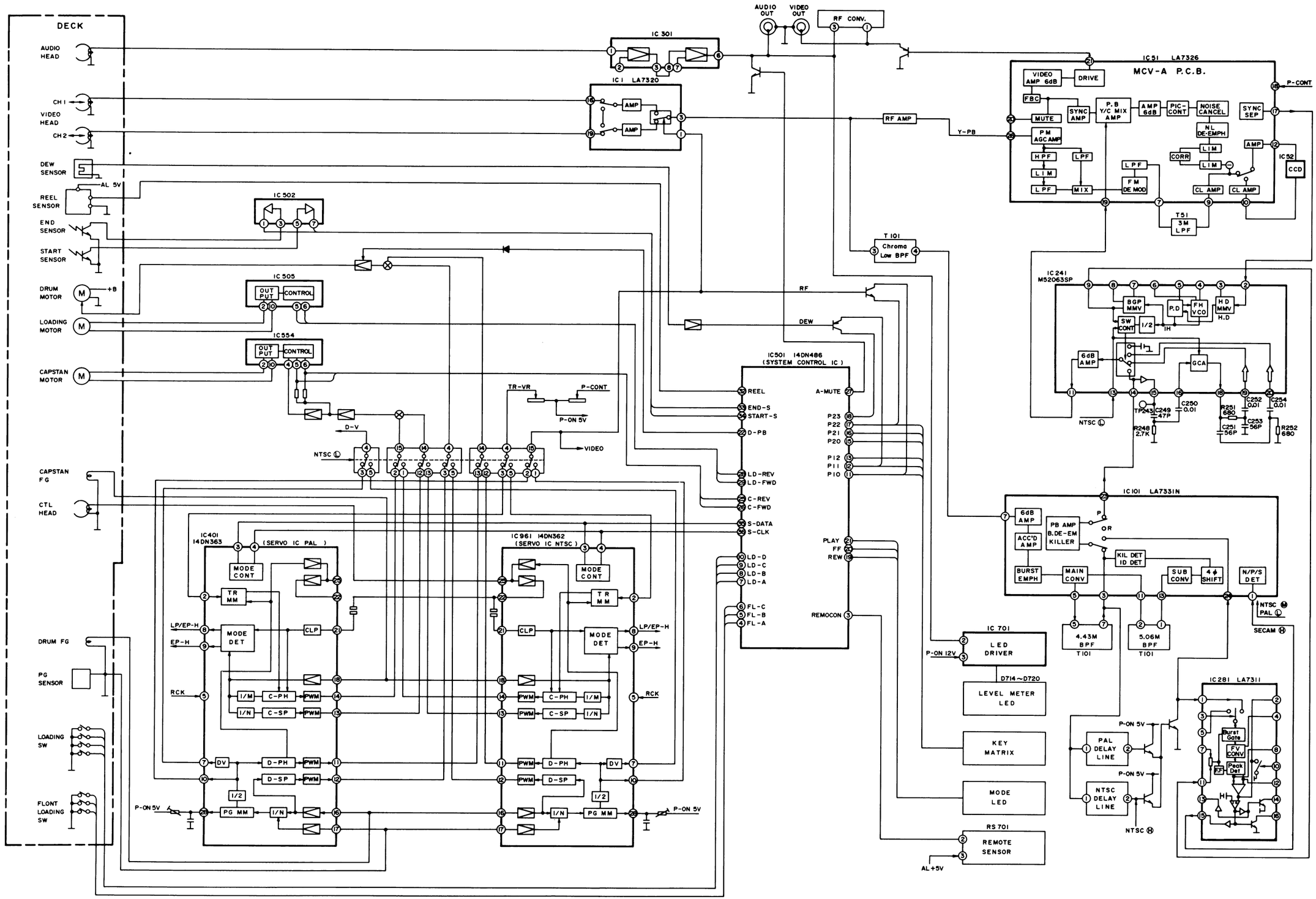

8. WIRING DIAGRAM

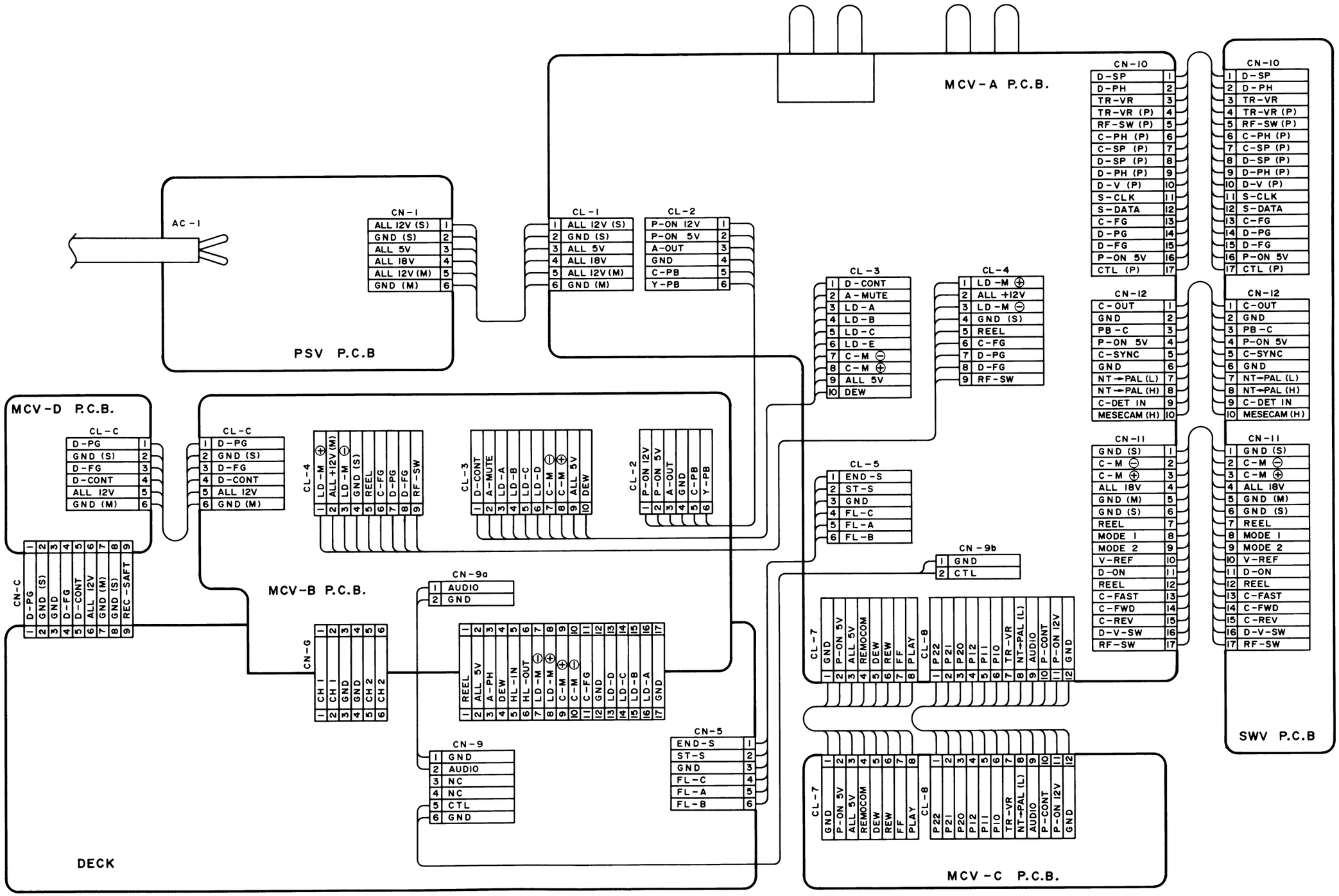

VW2037

10. MECHANICAL ADJUSTMENTS

1. Tape Transport Adjustment Flow Chart

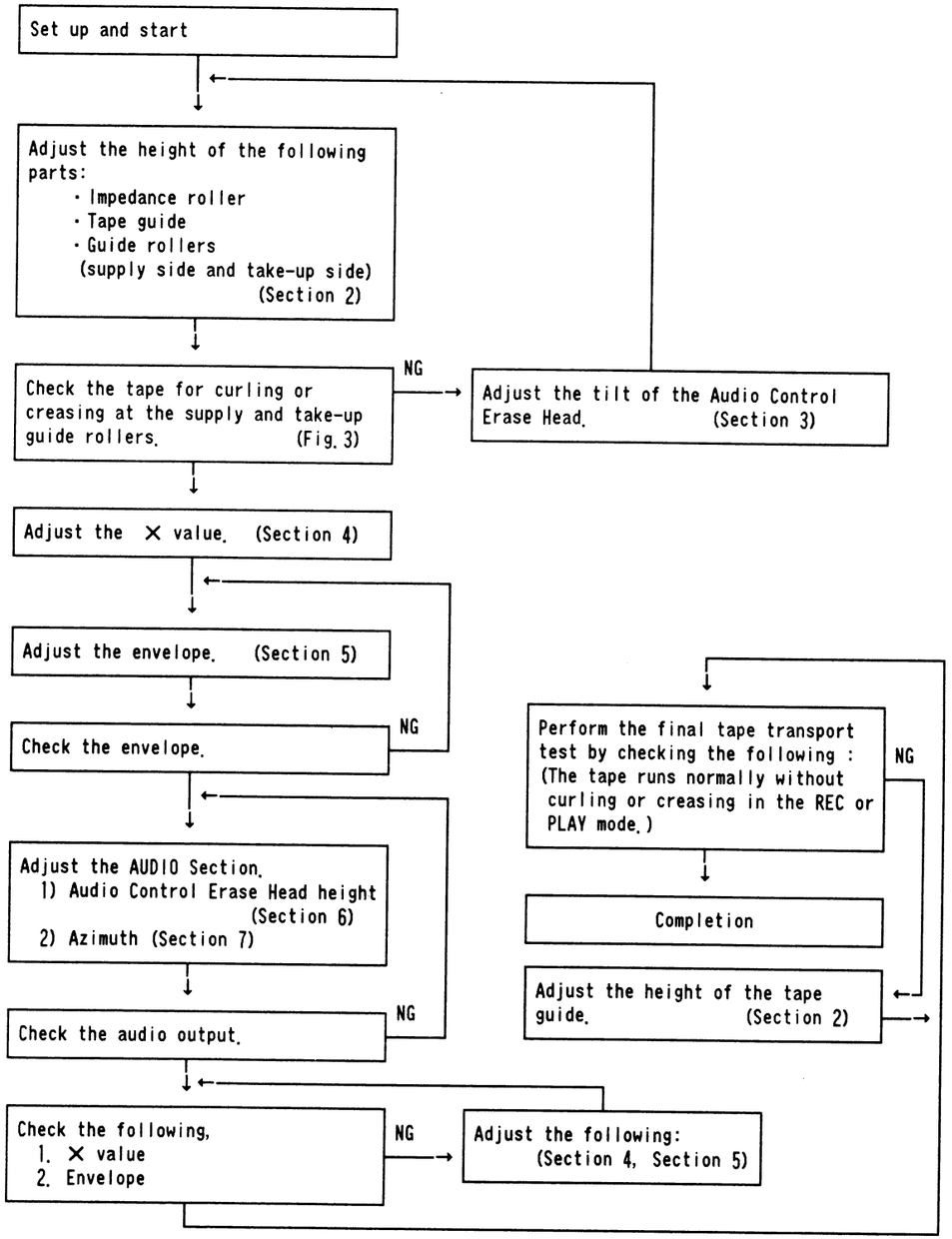

Note : Before these Mechanical Adjustments, you must complete the Video Head Switching Position Adjustment of 11. ELECTRICAL ADJUSTMENTS on page 11-1.

2. Tape Running Position Adjustment (Guide Roller / Tape Guide / Impedance Roller)

1. Perform the height adjustment for the following items to obtain the proper tape running position.
   ① Impedance Roller
   ② Guide Roller (Supply side)
   ③ Guide Roller (Take-up side)
   ④ Tape Guide

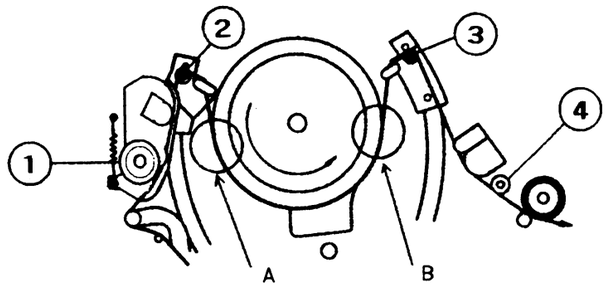

Fig. 1

2. Load a blank tape and set the VCR to the PLAY mode. Check the tape transport at points "A" and "B" as shown in Fig. 1.

3. Operate the VCR between the PLAY and STOP modes several times.

4. Observe the tape transport at the lead surface of the cylinder during the PLAY mode, and confirm that the tape runs smoothly along the lead surface of the cylinder without slipping downward or upward. (Refer to Fig. 2.)

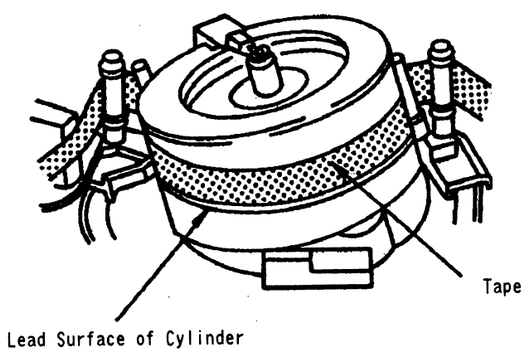

Fig. 2

5. During loading, play and unloading, observe the tape at the supply and take-up guide rollers, tape guide and impedance roller. Confirm that there is no curling or creasing etc., as shown in Fig. 3.

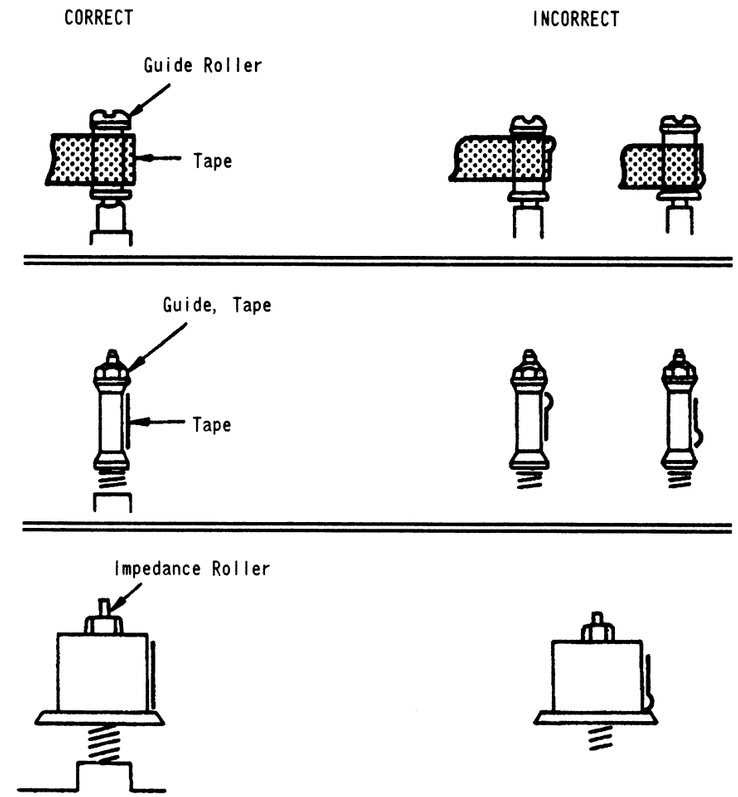

Fig. 3

6. If any curling or creasing is noted, adjust tape guide roller and impedance roller first. In this case, adjust the impedance roller in both PLAY and REV modes so that tape runs as shown in Fig. 4.

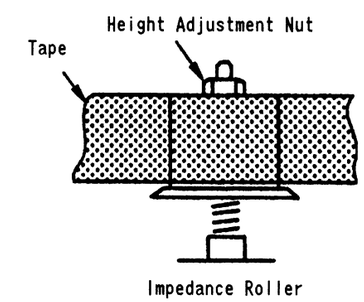

Fig. 4.

7. Next, adjust the guide roller height. Insert the adjustment driver into the guide roller top. (Refer to Fig. 5.)
Adjust the height by turning the driver slightly so that the tape runs on the guide roller as shown in Fig. 3, and the lower edge of the tape runs along the lead surface of the cylinder.

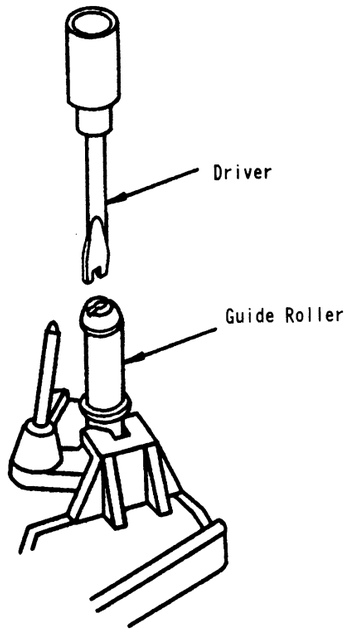

Fig. 5

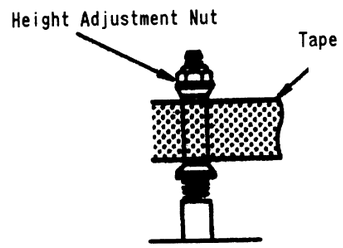

Guide, Tape

Fig. 6

8. After completion of the supply side guide roller adjustments, adjust tape guide so that tape runs as shown in Fig. 6, and adjust the take-up side guide roller by using the same procedures as for the supply side adjustments.
In this case, adjust the guide roller height first.

9. Confirm that there is no curling or creasing at the impedance roller. (Both PLAY and REV modes.)
If there is any curling or creasing at the impedance roller, adjust the same procedures of Fig. 6.

10. Finally, confirm that there is no curling or creasing at the take-up side guide roller and tape guide. If there is any curling or creasing between the take-up side guide roller and the audio control erase head, adjust the audio control erase head.

3. Audio Control Erase Head Adjustment

1. Load a recorded tape and set the VCR to PLAY mode.

2. Adjust the height of the edge of the audio track on the audio control head by using the height adjustment nut Ⓐ and the tilt adjustment screw Ⓒ so that the tape transport is smooth at the take-up guide pole. Align the audio control head height. (Refer to Fig. 7.)

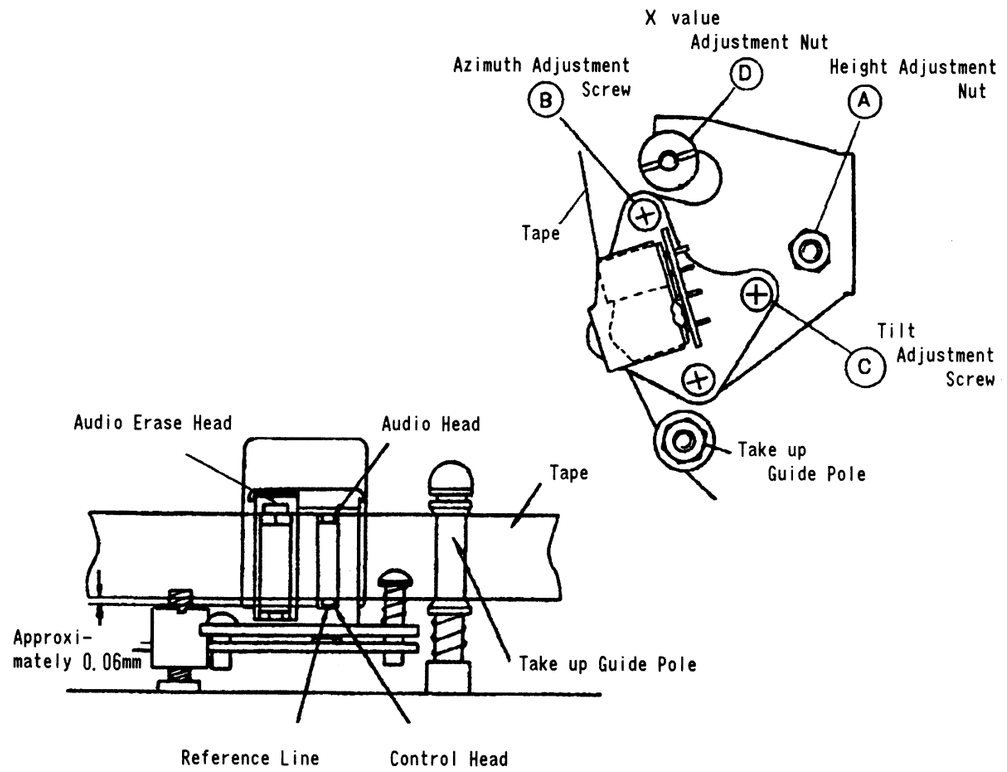

Fig. 7

3. The fine adjustment is not required at this time.
The following conditions are sufficient :
(a) Proper tape transport between the audio control head and the take-up guide pole.
(b) Stable SERVO system operation. (proper pickup of tape's recorded control signal.)

4. X Value Adjustment (PB FM Peak Adjustment)

Measuring Method

Measuring Point	Measuring Equip.	ADJ. Condition
TP 2 (C-PB) TP 1 (RF-SW)	Oscilloscope	PLAY MODE Test tape F8-NW

ADJ. Location	ADJ. Value
X value adjustment nut Ⓓ (Refer to Fig. 7)	Maximum level (CH1 PB FM Signal)

Test Equipment Connecting Diagrams

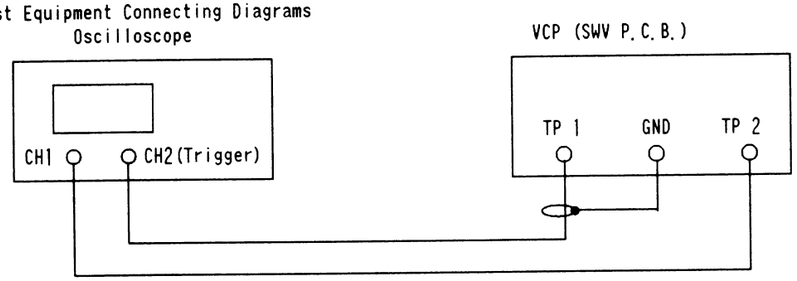

Fig. 8

1. Connect the equipment as shown in Fig. 8.
2. Set Tracking Control to its center position.
3. Adjust the X value adjustment nut Ⓓ for maximum PB FM envelope for CH1 playing the test tape. (Refer to Fig. 9)
4. After adjusting the X value, check that the output level of the PB FM envelope signal for CH1 changes symmetrically by rotating Tracking Control.

Note: 1. X value adjustment above should be done so that the noise can be kept out on the TV screen with Tracking Control set to its center.

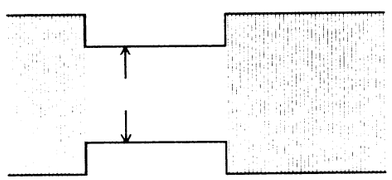

FM Envelope Wave

Maximum

Fig. 9

5. Envelope Waveform Adjustment

Measuring Method

Measuring Point	Measuring Equip.	ADJ. Condition
TP 2 (C-PB) TP 1 (RF-SW)	Oscilloscope	PLAY MODE Test tape F8-NW

ADJ. Location	ADJ. Value
Guide rollers ② ③ (Refer to Fig. 1)	Maximum level and correct waveform (PB FM Signal)

Test Equipment Connecting Diagrams

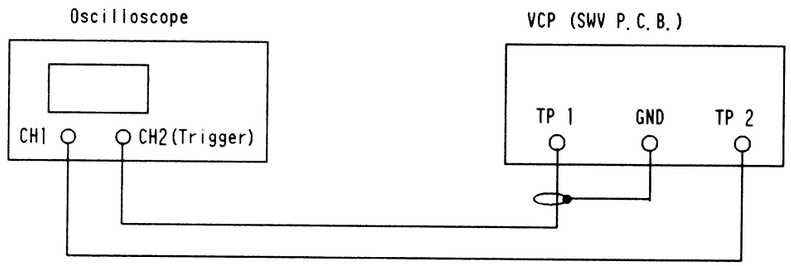

Fig. 10

1. Connect the equipment as shown in Fig. 10.
2. Playback the test tape.
3. The envelope waveform can be performed by adjusting the height of both the supply side and take-up side guide rollers.
   Finely adjust the height of guide rollers so that the envelope waveform becomes as flat as possible.
4. Set Tracking Control to the fixed(center) position and confirm that a nearly maximum level is obtained.
   Then rotate the Tracking Control in both directions while adjusting the height of guide rollers ② and ③, in order to obtain the envelope waveform which is as flat as possible.
   If the tape is above or lower than helical tape position, the envelope waveforms will take the shape as shown in Fig. 11 and Fig. 12.
5. Adjust for maximum flatness of the envelope waveform according to the Fig. 11 and Fig. 12.
6. Comfirmation of the correct adjustment can be made by altenatery rotate tracking Control, and check the symmetry of the emvelope.
7. Check the tape curl. (Refer to Section 2.)

	Tape is too high	
	Supply side	Take-up side
When the tracking control is rotated counterclockwise and clockwise directions.	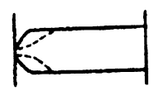	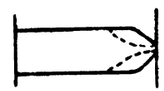
	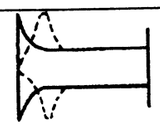	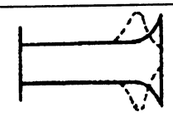
Adjustment	Supply side guide roller rotated clockwise direction (lowers guide roller) to flatten envelope.	Take-up side guide roller rotated clockwise direction (lowers guide roller) to flatten envelope.

Fig. 11

	Tape is too low	
	Supply side	Take-up side
When the tracking control is rotated counterclockwise and clockwise directions.		
		
Adjustment	Supply side guide roller rotated counterclockwise direction (raises guide roller) to flatten envelope.	Take-up side guide roller rotated counterclockwise direction (raises guide roller) to flatten envelope.

Fig. 12

6. Audio Control Erase Head Height / Audio Control Erase Head Tilt Adjustment

Measuring Method

Measuring Point	Measuring Equip.	ADJ. Condition
TP301 (A-OUT)	Oscilloscope AC voltmeter	PLAY MODE Test tape F6-A

ADJ. Location	ADJ. Value
Height adjustment nut Ⓐ Azimuth adjustment screw Ⓑ Tilt adjustment screw Ⓒ (Refer to Fig. 7)	Maximum level (AC voltmeter)

Test Equipment Connecting Diagrams

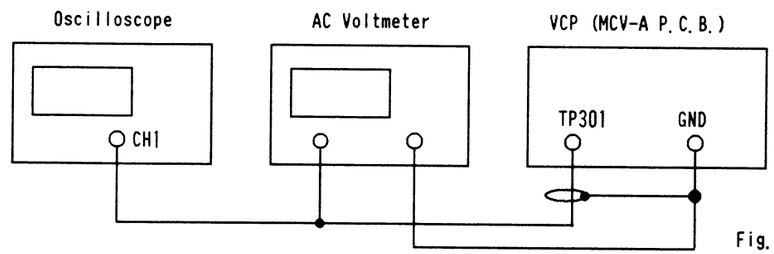

Fig. 13

1. Connect the equipment as shown in Fig. 13.
2. Confirm that the tape running between the take-up guide roller and the audio control erase head has no slack. If the tape has slack, take it up by turning the tilt adjustment screw Ⓒ. Then readjust GUIDE ROLLER HEIGHT in section 2 and the X value in section 4.
3. After confirming on the oscilloscope that a 1 kHz audio signal is being output by playing back the test tape, adjust the height adjustment nut Ⓐ so that the AC voltmeter's reading is brought to its maximum level.
4. Adjust the azimuth adjustment screw Ⓑ so that the AC voltmeter's reading is brought to its maximum level.

7. Audio Control Erase Head Azimuth Adjustment

Measuring Method

Measuring Point	Measuring Equip.	ADJ. Condition
TP301 (A-OUT)	Oscilloscope AC voltmeter	PLAY MODE Test tape F6-N

ADJ. Location	ADJ. Value
Azimuth adjustment screw Ⓑ (Refer to Fig. 7)	Maximum level (AC voltmeter)

1. Connect the equipment as shown in Fig. 13.
2. After confirming on the oscilloscope that an audio signal is being output by playing back the test tape, adjust the azimuth adjustment screw Ⓑ so that the AC voltmeter's reading or osilloscope waveform is brought to its maximum level.

Note: Fix Tilt adjustment screw Ⓒ with lock paint after readjustment (Refer to Fig. 7).

11. ELECTRICAL ALIGNMENT INSTRUCTIONS

Preparation

Electrical adjustments are required after replacing circuit components and certain mechanical parts.
It is important to perform these adjustments only after all repairs and replacements have been completed.
Also, do not attempt these adjustments unless the proper equipment is available.

Test Equipment Required

1. Oscilloscope : Dual-trace with 10:1 probe.
2. TV Monitor
3. Test tape : F6-A, F8-A

1. PAL Head Switching Point Adjustment

Test Point	Adjustment Point	Mode	Test Tape
TP55 (V-OUT) TP401 (RF-SW)	VR402 (Switching Point) (MCV-A P. C. B.)	PLAY	F6-A

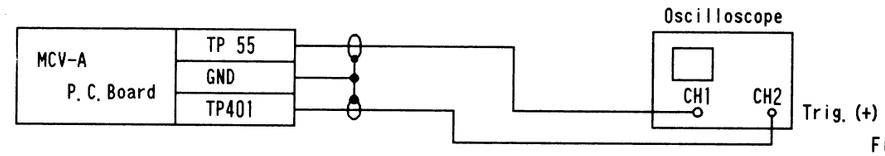

Fig. 1

1. Connect the equipment as shown in Fig. 1.
2. Set the "PAL MESECAM/NTSC" select switch to "PAL MESECAM" side.
3. Playback the test tape and adjust VR402 so that the V-sync front edge of CH1 video output waveform is delayed 6.5H (412.7μs) from the rising of CH2 Head Switching Pulse waveform.

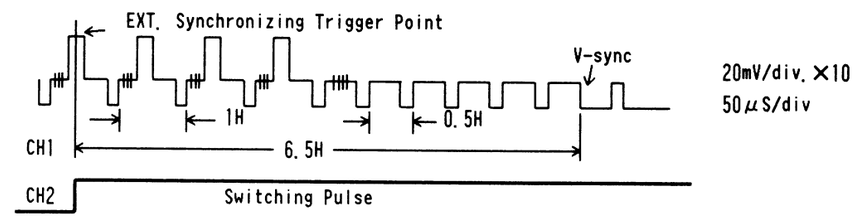

2. PAL CTL Preset Adjustment

Test Point	Adjustment Point	Mode	Test Tape
TP402 (CTL) TP401 (RF-SW)	VR401 (CTL) (MCV-A P. C. B.)	PLAY	F6-A

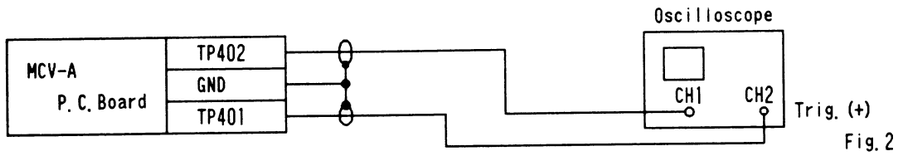

Fig. 2

1. Connect the equipment as shown in Fig. 2.
2. Set the "PAL MESECAM/NTSC" select switch to "PAL MESECAM" side.
3. Set the tracking volume to the center click position.
4. Playback the test tape and adjust VR401 to make a position of CH1 signal where delayed 4.0 msec. from the rising of CH2 RF Switching Pulse.

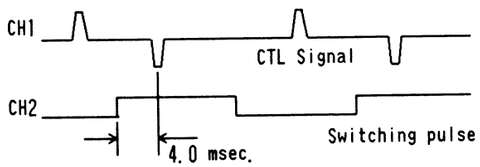

3. PB Output Level Adjustment

Test Point	Adjustment Point	Mode	Test Tape
TP55 (V-OUT)	VR51 (PB Level) (MCV-A P. C. B.)	PLAY	F6-A

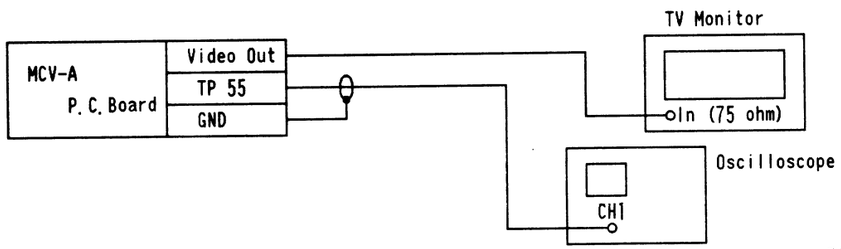

Fig. 3

1. Connect the equipment as shown in Fig. 3.
2. Set the "PAL MESECAM/NTSC" select switch to "PAL MESECAM" side.
3. Playback the test tape and adjust VR51 so that the video level becomes 1.0 Vp-p±0.05V.

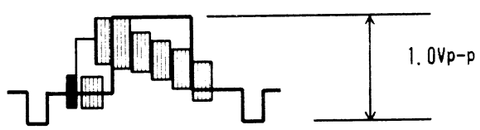

4. Noise Cancel Adjustment

Test Point	Adjustment Point	Mode	Test Tape
TP52 TP53	VR52 (Noise Cancel) (MCV-A P. C. B.)	PLAY	F6-A

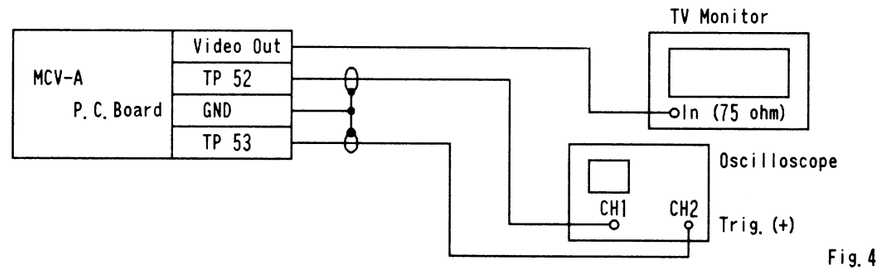

Fig. 4

1. Connect the equipment as shown in Fig. 4.
2. Set the "PAL MESECAM/NTSC" select switch to "PAL MESECAM" side.
3. Playback the test tape and adjust VR52 so that the output levels(A, B) of both channels become the same.

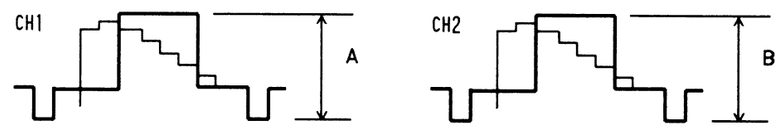

5. NTSC Head Switching Point Adjustment

Test Point	Adjustment Point	Mode	Test Tape
TP55 (V-OUT) TP401 (RF-SW)	VR962 (Switching Point) (SWV P. C. B.)	PLAY	F8-A

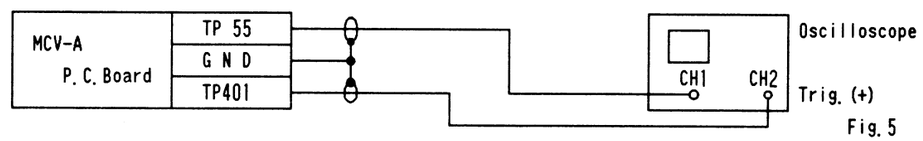

Fig. 5

1. Connect the equipment as shown in Fig. 5.
2. Set the "PAL MESECAM/NTSC" select switch to "NTSC" side.
3. Playback the test tape and adjust VR962 so that the V-sync front edge of CH1 video output waveform is delayed 6.5H (412.7μs) from the rising of CH2 Head Switching Pulse waveform.

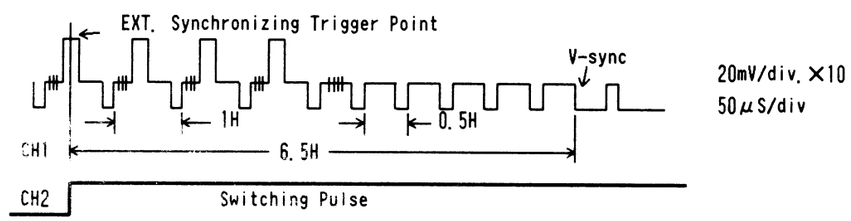

6. NTSC CTL Preset Adjustment

Test Point	Adjustment Point	Mode	Test Tape
TP402 (CTL) TP401 (RF-SW)	VR961 (CTL) (SWV P.C.B.)	PLAY	F8-A

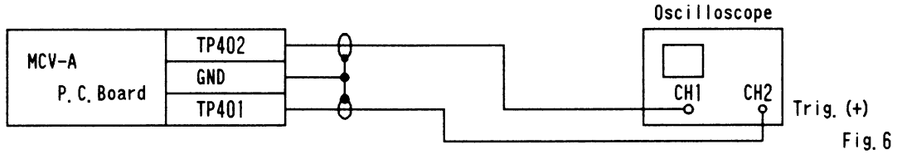

Fig. 6

1. Connect the equipment as shown in Fig. 6.
2. Set the "PAL MESECAM/NTSC" select switch to "NTSC" side.
3. Set the tracking volume to the center click position.
4. Playback the test tape and adjust VR401 so that the falling of CH1 CTL signal becomes the same position with rising of CH2 RF switching pulse.

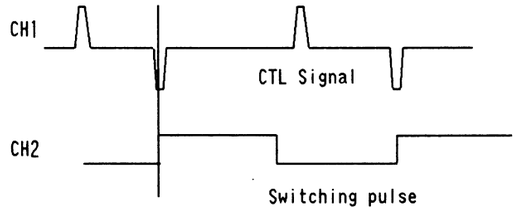

7. Free-run Frequency Adjustment

Test Point	Adjustment Point	Mode	Test Tape
TP241 TP242 TP243	VR241 (SWV P.C.B.)	PLAY	F8-A

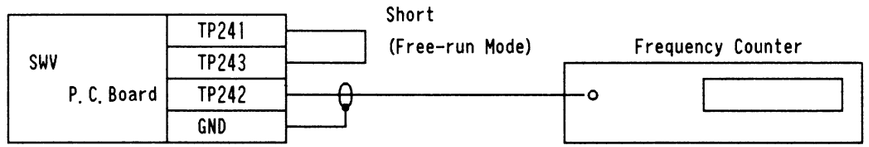

Fig. 7.

1. Connect the equipment as shown in Fig. 7.
2. Set the "PAL MESECAM/NTSC" select switch to "NTSC" side.
2. Playback the test tape and adjust VR241 so that the Frequency Counter becomes 15.734 ±0.2KHz.

12. ALIGNMENT AND TEST POINTS

MCV-A P.C. BOARD
(TOP VIEW)

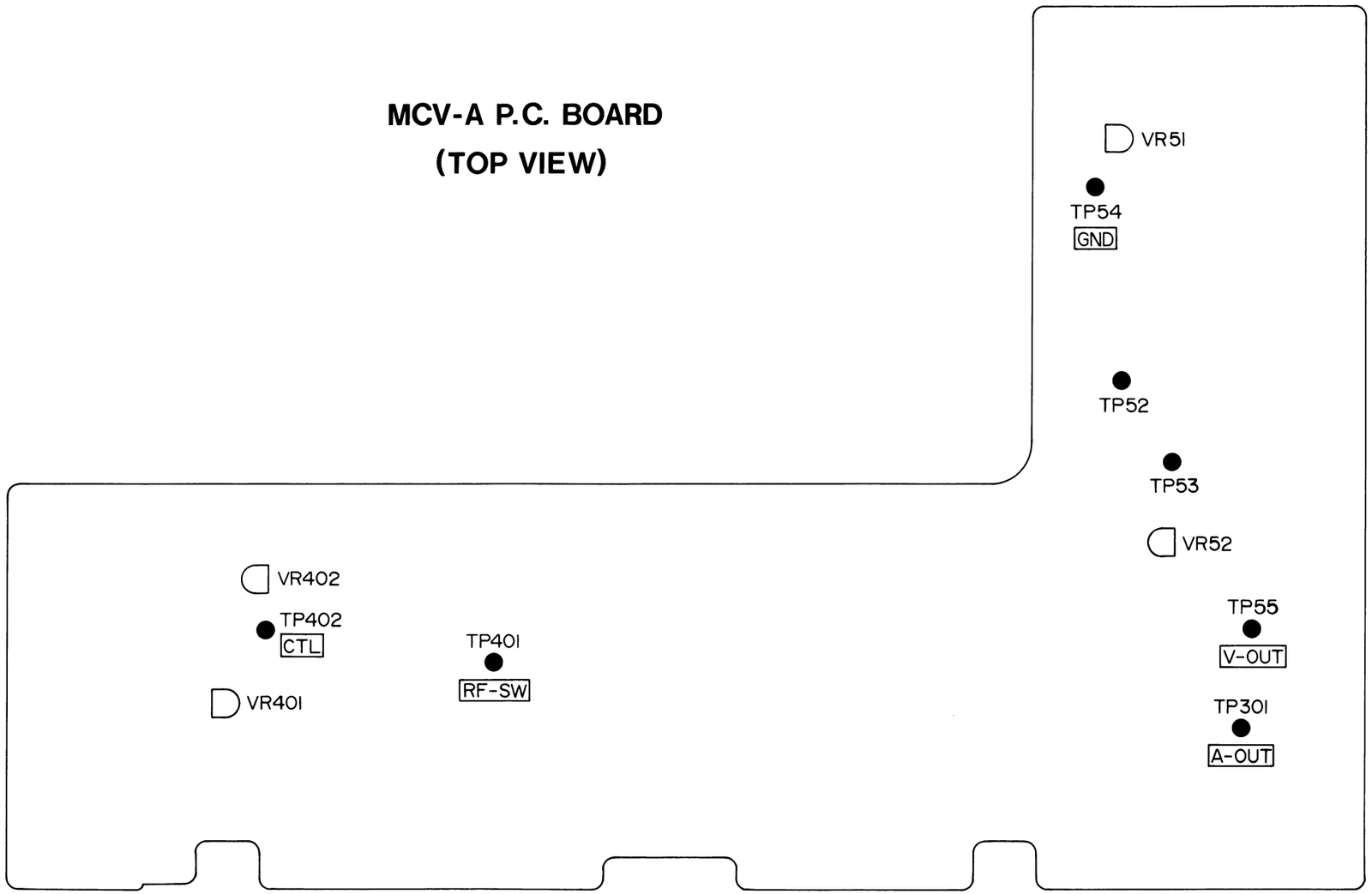

MCV-B P.C. BOARD
(TOP VIEW)

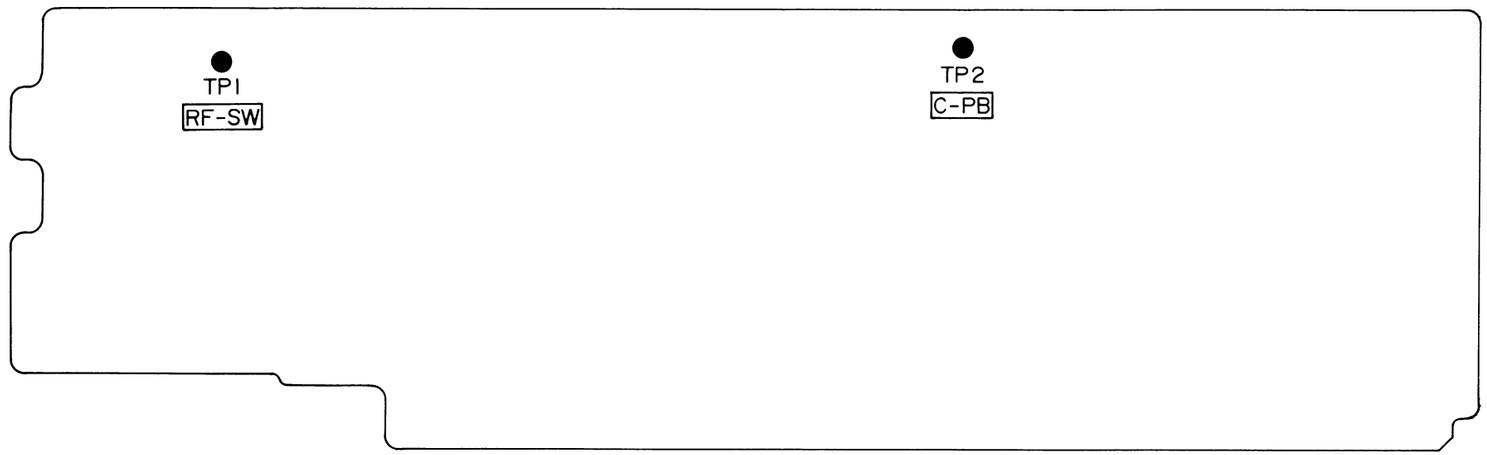

SWV P.C. BOARD
(TOP VIEW)

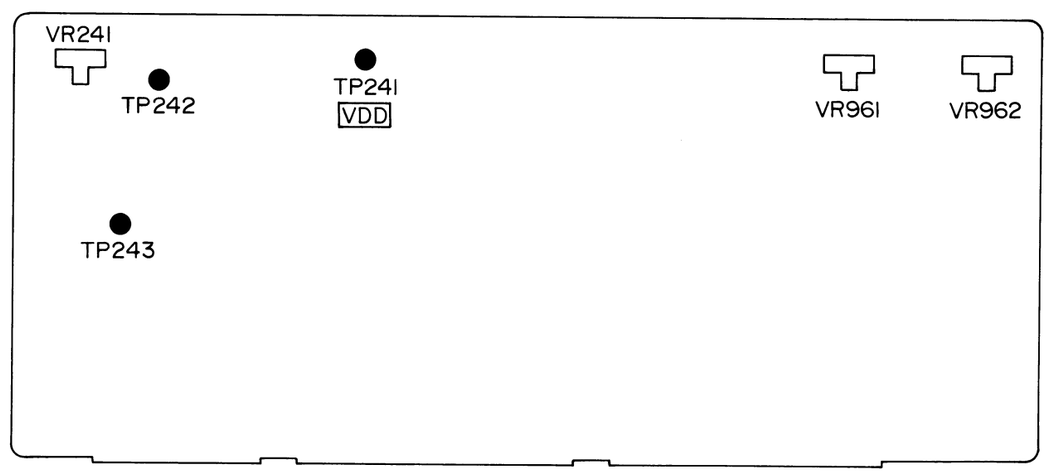

13. P. C. BOARD TOP AND BOTTOM VIEWS

MCV-A P.C. BOARD TOP VIEW

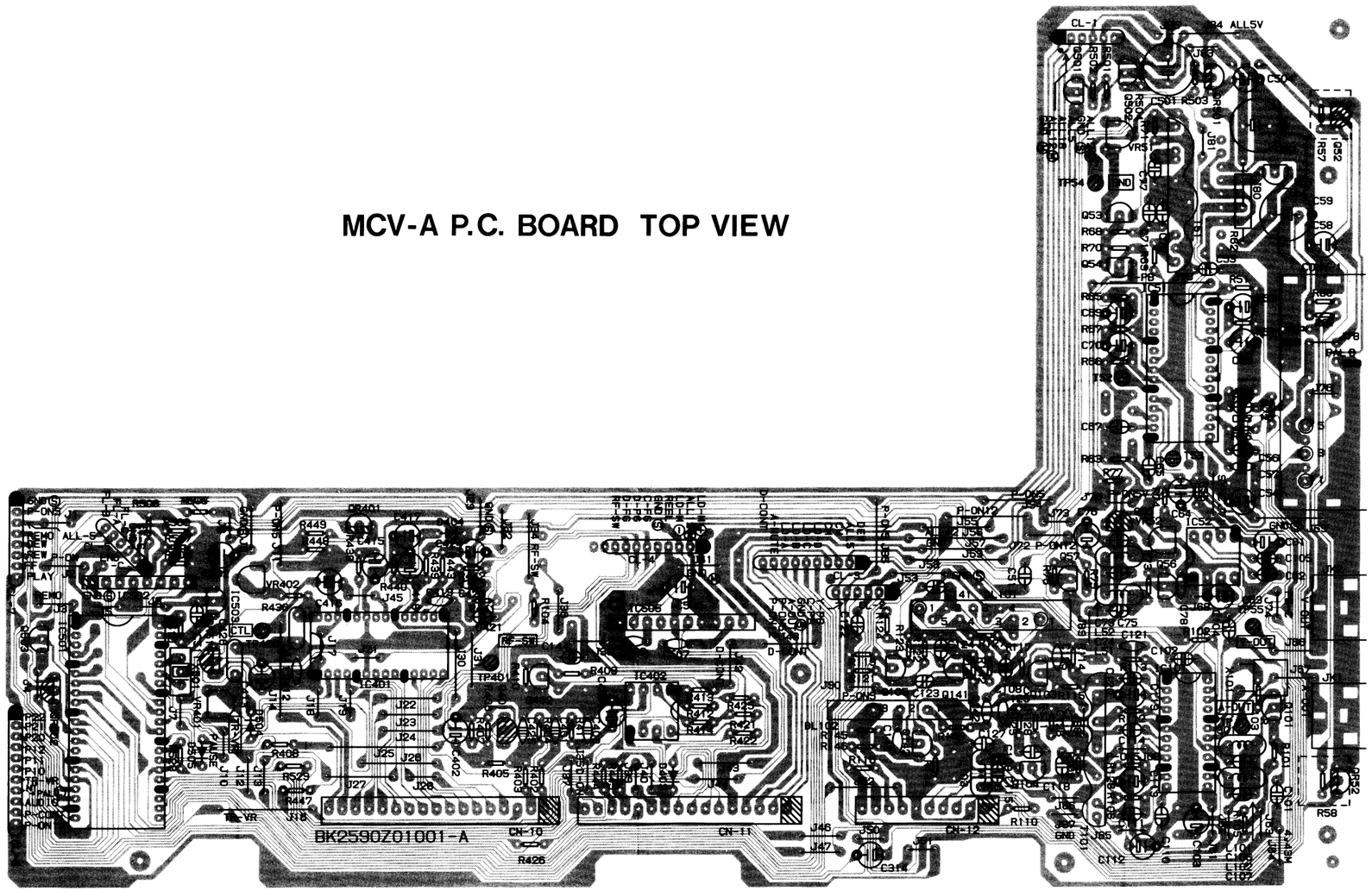

BK2590Z01001-A

MCV-A P.C. BOARD BOTTOM VIEW

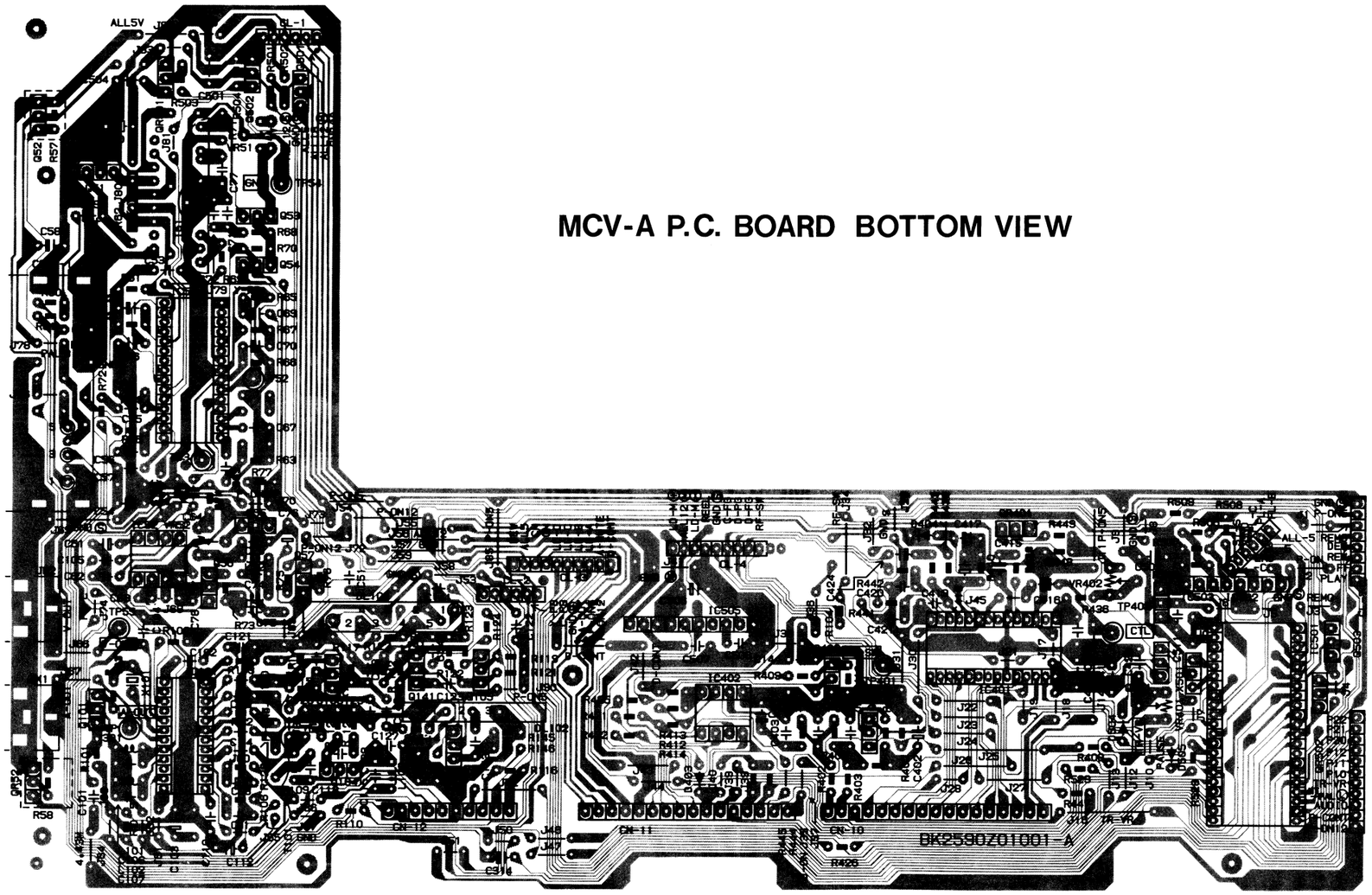

MCV-B P.C. BOARD TOP VIEW

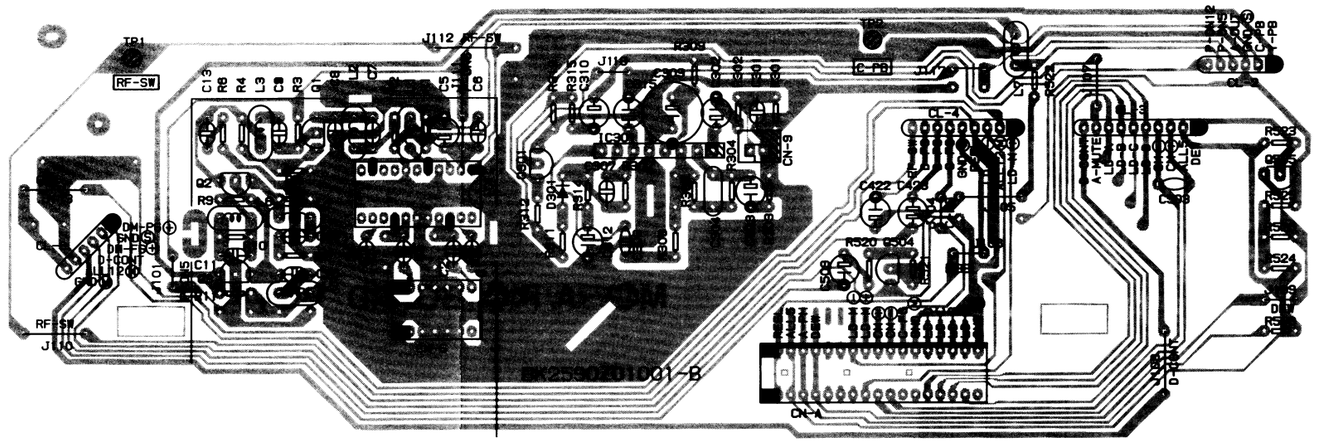

MCV-C P.C. BOARD

TOP VIEW

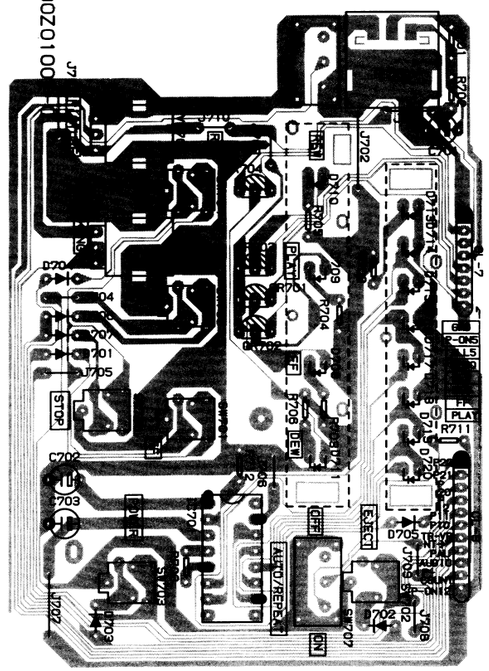

BOTTOM VIEW

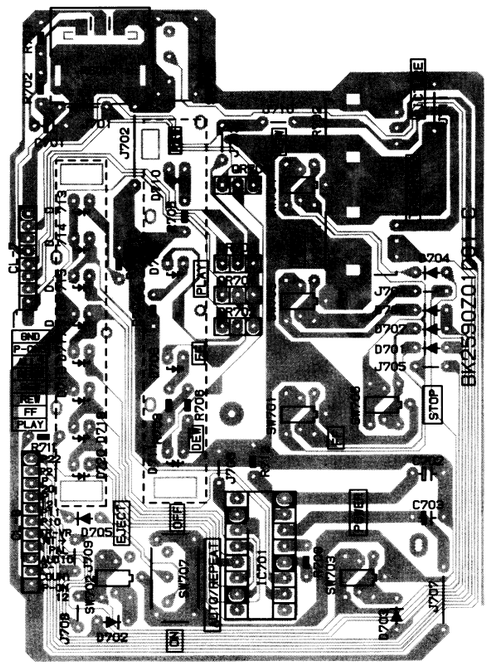

MCV-B P.C. BOARD BOTTOM VIEW

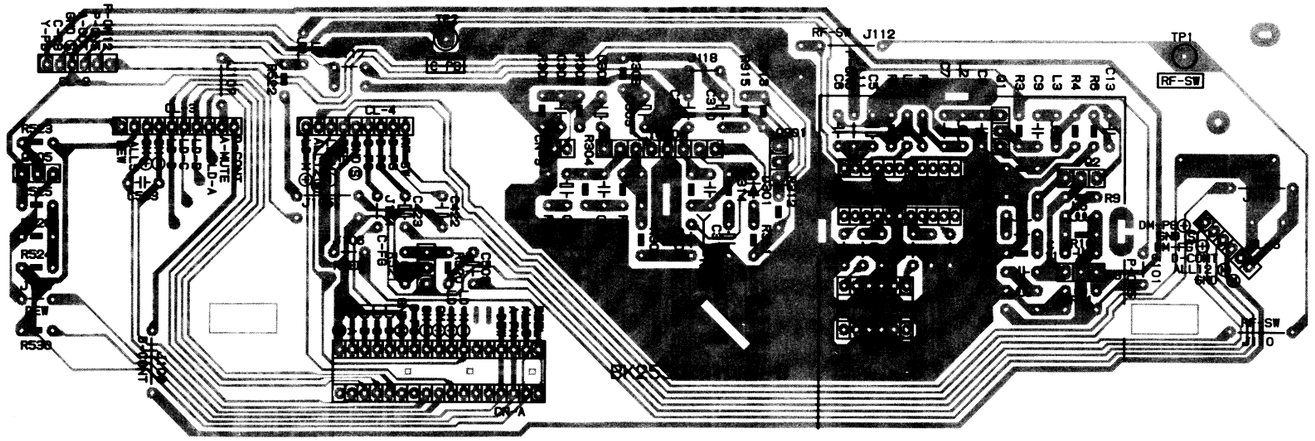

MCV-D P.C. BOARD

TOP VIEW

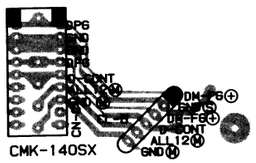

BOTTOM VIEW

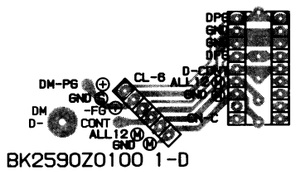

MCV-E P.C. BOARD

TOP VIEW

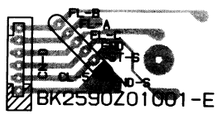

BOTTOM VIEW

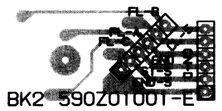

SWV P. C. BOARD

TOP VIEW

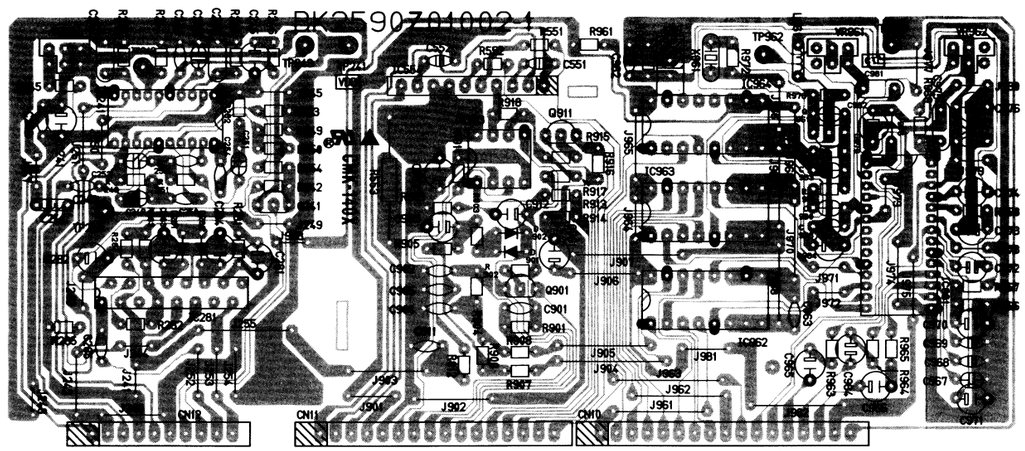

BOTTOM VIEW

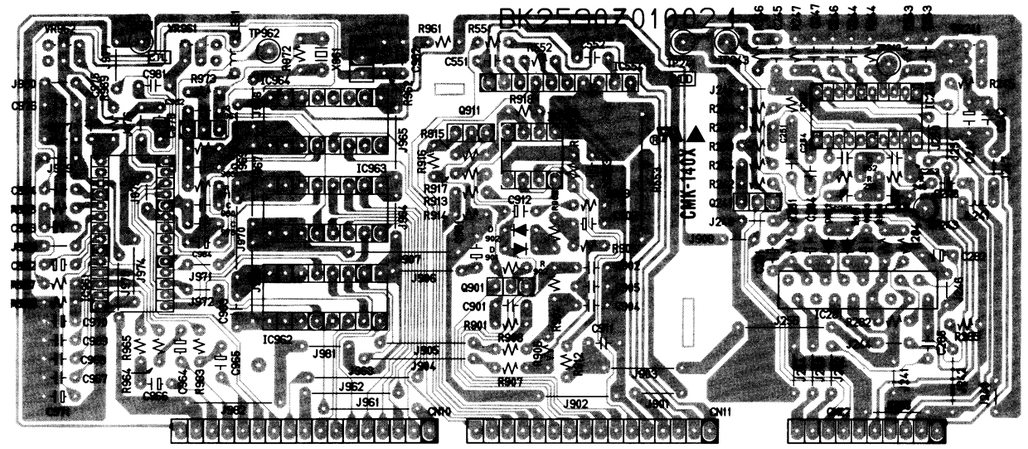

PSV P.C. BOARD TOP VIEW

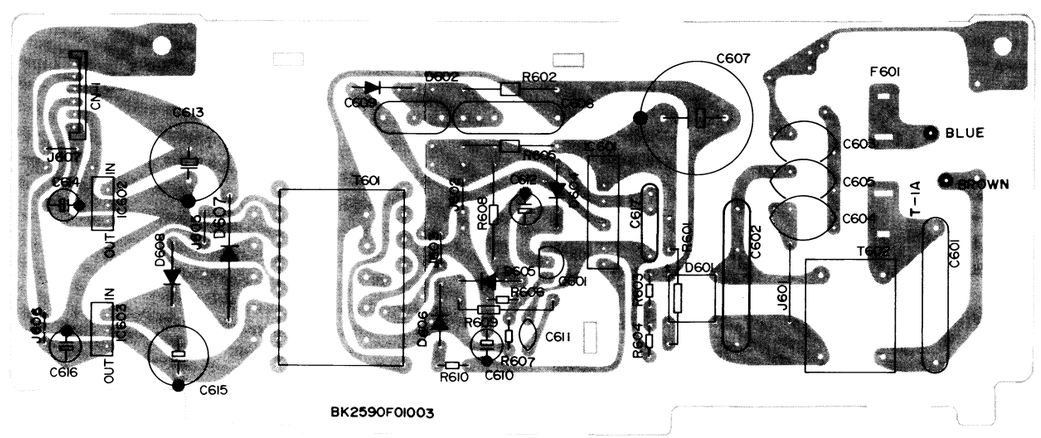

14. SCHEMATIC DIAGRAM

STANDARD NOTES

Temperature character of mark

Mark	Capacity change rate	Standard temperature	Use temperature of extent
Ⓑ	± 10 %	20 ℃	-25 ~ +85℃
Ⓕ	+30−80%	20 ℃	-25 ~ +85℃
(SR)	± 15 %	20 ℃	-25 ~ +85℃
(Z)	+30−80%	20 ℃	-10 ~ +70℃

WARNING

Replacement parts which special safety characteristics are identified by ⚠ showing on this schematic diagram. Replace these critical components with recommended replacement parts. Don't degrade the safety of this set through improper servicing. Service personnel to make leakage current or resistance measurement to determine that exposed parts are acceptably insulated from the supply circuit before returning the appliance to the customer.

NOTES

① Do not use the part number shown on this drawing for ordering. The correct part number is shown in the parts list, and may be slightly different or amended since this drawing was prepared.
② All resistance values are indicated in ohm ($K=10^3$, $M=10^6$).
③ Resister wattage without mentioned are 1/5W.
④ All capacitance values are indicated in μF ($P=10^{-6}\mu F$).

VOLTAGE CHARTS

Note
* Condition (A) : PAL MESECAM/NTSC Select Switch = PAL MESECAM
  Test Tape = F6-A
* Condition (B) : PAL MESECAM/NTSC Select Switch = NTSC
  Test Tape = F8-A
* All transistors are condition (A).
* All voltages are DC mesured and indicatied in volt.

CN-1 (Pins 6) Condition (A)

Mode \ Pin No.	1	2	3	4	5	6
PLAY	11.7	0	4.8	17.5	11.7	0

IC 1 (Pins 22) Condition (A)

Mode \ Pin No.	1	2	3	4	5	6	7	8	9	10
PLAY	~	4.6	1.9	0	0	0	0	0	0	0

Mode \ Pin No.	11	12	13	14	15	16	17	18	19	20
PLAY	0	0	0	0	1.8	0.6	0	0	0.6	1.8

Mode \ Pin No.	21	22
PLAY	0	0

IC 51 (Pins 30) Condition (A)

Mode \ Pin No.	1	2	3	4	5	6	7	8	9	10
PLAY	0	0.4	0	2.6	4.7	1.0	2.1	0	3.3	3.3

Mode \ Pin No.	11	12	13	14	15	16	17	18	19	20
PLAY	0	2.8	3.1	3.1	3.9	3.3	0.2	2.4	0	0.1

Mode \ Pin No.	21	22	23	24	25	26	27	28	29	30
PLAY	2.3	4.7	3.3	3.1	3.8	3.4	0.9	0	4.7	4.1

IC 52 (Pins 8) Condition (A)

Mode \ Pin No.	1	2	3	4	5	6	7	8
PLAY	8.7	0	8.7	3.2	3.1	2.2	1.5	4.7

IC101 (Pins 24) Condition (A)

Mode \ Pin No.	1	2	3	4	5	6	7	8	9	10
PLAY	0.2	1.6	3.0	2.3	2.5	0	3.0	2.6	4.7	2.6

Mode \ Pin No.	11	12	13	14	15	16	17	18	19	20
PLAY	2.5	1.8	4.4	0.3	2.3	4.7	4.7	2.1	3.8	4.7

Mode \ Pin No.	21	22	23	24
PLAY	1.6	~	1.8	3.2

IC241 (Pins 20) Condition (B)

Mode \ Pin No.	1	2	3	4	5	6	7	8	9	10
PLAY	0	0.2	2.1	2.8	3.3	2.8	1.9	2.6	3.6	4.6

Mode \ Pin No.	11	12	13	14	15	16	17	18	19	20
PLAY	2.1	0	0.3	2.1	1.9	2.6	0.3	2.7	2.1	2.1

IC281 (Pins 16) Condition (B)

Mode \ Pin No.	1	2	3	4	5	6	7	8	9	10
PLAY	3.9	0	4.7	0.3	3.9	0	0	2.2	4.7	0

Mode \ Pin No.	11	12	13	14	15	16
PLAY	3.5	2.2	4.6	0	2.3	0.5

IC301 (Pins 8) Condition (A)

Mode \ Pin No.	1	2	3	4	5	6	7	8
PLAY	1.4	0.8	3.9	10.5	0	4.3	0.9	1.4

IC401 (Pins 28) Condition (A)

Mode \ Pin No.	1	2	3	4	5	6	7	8	9	10
PLAY	4.7	~	4.8	4.8	2.4	0	0	0	0	~

Mode \ Pin No.	11	12	13	14	15	16	17	18	19	20
PLAY	2.5	2.4	2.3	~	0	2.4	2.4	2.4	2.4	2.4

Mode \ Pin No.	21	22	23	24	25	26	27	28
PLAY	2.0	2.4	0	2.4	2.4	4.9	2.5	1.7

IC402 (Pins 8) Condition (A)

Mode \ Pin No.	1	2	3	4	5	6	7	8
PLAY	2.7	2.4	2.4	0	2.4	2.4	2.4	4.7

IC501 (Pins 42) Condition (A)

Mode \ Pin No.	1	2	3	4	5	6	7	8	9	10
PLAY	0	3.6	4.6	4.8	4.8	0	4.8	4.8	0	4.8

Mode \ Pin No.	11	12	13	14	15	16	17	18	19	20
PLAY	4.7	4.8	4.8	4.8	4.8	4.7	4.6	0.3	4.8	4.8

Mode \ Pin No.	21	22	23	24	25	26	27	28	29	30
PLAY	0	4.7	0	0	0	4.7	0	4.7	4.7	0

Mode \ Pin No.	31	32	33	34	35	36	37	38	39	40
PLAY	4.7	~	4.8	4.8	4.8	4.8	2.1	2.3	1.4	2.4

Mode \ Pin No.	41	42
PLAY	4.8	4.8

IC502 (Pins 8) Condition (A)

Mode \ Pin No.	1	2	3	4	5	6	7	8
PLAY	4.8	2.4	4.3	0	4.3	2.4	4.8	4.8

IC503 (Pins 3) Condition (A)

Mode \ Pin No.	1	2	3
PLAY	4.8	0	4.8

IC505 (Pins 10) Condition (A)

Mode \ Pin No.	1	2	3	4	5	6	7	8	9	10
PLAY	0	0.5	0.9	0.4	1.9	1.9	11.7	11.7	0.9	0.5

IC554 (Pins 10) Condition (A)

Mode \ Pin No.	1	2	3	4	5	6	7	8	9	10
PLAY	0	0.1	0.2	2.9	0	3.6	17.1	17.1	5.0	3.2

IC701 (Pins 16) Condition (A)

Mode \ Pin No.	1	2	3	4	5	6	7	8	9	10
PLAY	1.4	0	11.7	4.9	1.1	9.5	7.4	0.6	2.3	9.5

Mode \ Pin No.	11	12	13	14	15	16
PLAY	7.4	10.6	10.7	10.2	0	0

IC903 (Pins 8) Condition (A)

Mode \ Pin No.	1	2	3	4	5	6	7	8
PLAY	15.7	0.3	2.3	0	2.4	2.4	2.9	17.1

IC961 (Pins 28) Condition (A)

Mode \ Pin No.	1	2	3	4	5	6	7	8	9	10
PLAY	4.7	0.7	4.8	4.8	2.2	0	0.1	0	0	2.3

Mode \ Pin No.	11	12	13	14	15	16	17	18	19	20
PLAY	2.4	2.3	2.3	2.4	0	2.4	2.3	2.3	2.3	2.3

Mode \ Pin No.	21	22	23	24	25	26	27	28
PLAY	1.8	2.3	0	2.3	2.3	4.7	2.0	1.6

IC962 (Pins 16) Condition (A)

Mode \ Pin No.	1	2	3	4	5	6	7	8	9	10
PLAY	~	2.3	2.3	2.3	3.5	0	0	0	4.2	4.2

Mode \ Pin No.	11	12	13	14	15	16
PLAY	4.2	4.7	2.3	2.3	2.4	4.7

IC963 (Pins 16) Condition (A)

Mode \ Pin No.	1	2	3	4	5	6	7	8	9	10
PLAY	~	~	~	~	0.5	0	0	0	4.2	4.2

Mode \ Pin No.	11	12	13	14	15	16
PLAY	4.2	~	2.4	2.4	~	4.7

IC964 (Pins 16) Condition (A)

Mode \ Pin No.	1	2	3	4	5	6	7	8	9	10
PLAY	0.1	0.1	0	0	0	0	0	0	4.2	4.2

Mode \ Pin No.	11	12	13	14	15	16
PLAY	4.2	0.1	0.1	0.1	0.1	4.7

Q 1

Mode \ Pin	E	C	B
PLAY	1.1	3.5	1.9

Q 2

E	C	B
0.4	4.3	1.1

Q 3

E	C	B
3.7	4.6	4.4

Q51

Mode \ Pin	E	C	B
PLAY	3.1	0	2.4

Q52

E	C	B
4.8	4.8	4.1

Q53

E	C	B
0.3	3.8	1.0

Q54

Mode \ Pin	E	C	B
PLAY	3.2	4.8	3.8

Q55

E	C	B
1.5	0	0.9

Q56

E	C	B
2.6	8.7	3.2

Q57

Mode \ Pin	E	C	B
PLAY	8.7	11.7	9.4

Q101

E	C	B
3.1	4.7	3.8

Q103

E	C	B
1.7	4.7	2.3

Q104

Mode \ Pin	E	C	B
PLAY	1.2	2.6	1.9

Q105

E	C	B
1.4	3.3	2.1

Q141

E	C	B
1.0	4.8	1.6

Q142

Mode \ Pin	E	C	B
PLAY	1.0	4.8	0

Q241

E	C	B
4.6	0	4.1

Q301

E	C	B
0	0	0

Q401

Mode \ Pin	E	C	B
PLAY	2.4	2.5	3.2

Q402

E	C	B
0	2.1	0

Q501

E	C	B
4.8	4.8	5.5

Q502

Mode \ Pin	E	C	B
PLAY	11.7	11.7	11.0

Q503

E	C	B
4.6	4.7	~

Q504

E	C	B
0	2.9	0.6

Q505

Mode \ Pin	E	C	B
PLAY	0	4.8	0

Q901

E	C	B
2.3	2.4	2.3

Q911

E	C	B
0	2.4	0

Q961

Mode \ Pin	E	C	B
PLAY	1.9	4.7	2.3

QR51

E	C	B
4.7	0.1	4.7

QR52

E	C	B
0	0	4.7

QR401

Mode \ Pin	E	C	B
PLAY	~	4.7	0

QR501

E	C	B
0	0	4.8

QR502

E	C	B
4.8	0.3	4.8

QR701

Mode \ Pin	E	C	B
PLAY	4.7	0	4.8

QR702

E	C	B
4.7	4.7	0

QR703

E	C	B
4.7	0	4.8

QR704

Mode \ Pin	E	C	B
PLAY	4.8	0	4.8

15. WAVEFORM

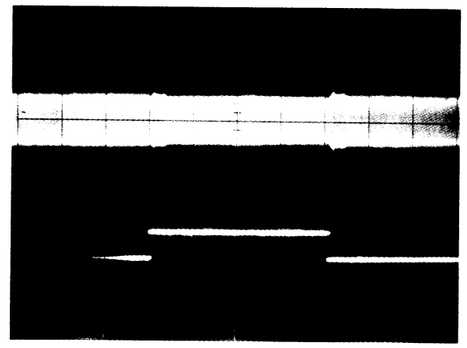

WF1 Point:TP 2 20mV/div. ×10
TP 1 0.5V/div. ×10
5 ms/div. Mode: PB(SP) Test Tape: F6-N

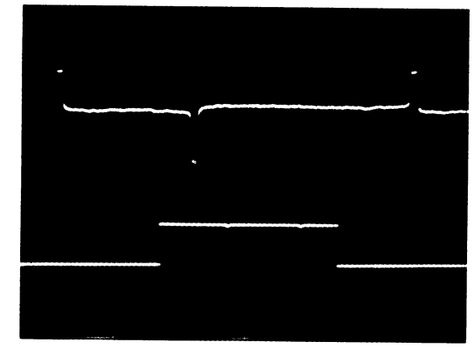

WF2 Point:TP402 0.1V/div. ×10
TP401 0.5V/div. ×10
5 ms/div. Mode: PB(SP) Test Tape: F6-A

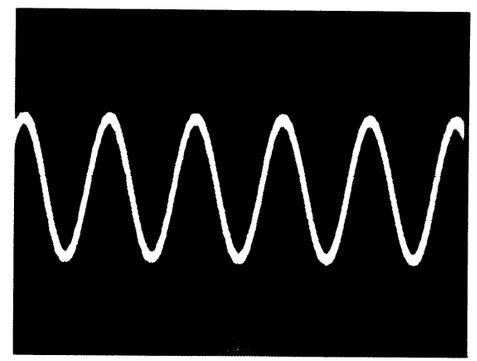

WF3 Point:TP301 50mV/div. ×10
0.5 ms/div. Mode: PB(SP) Test Tape: F6-A

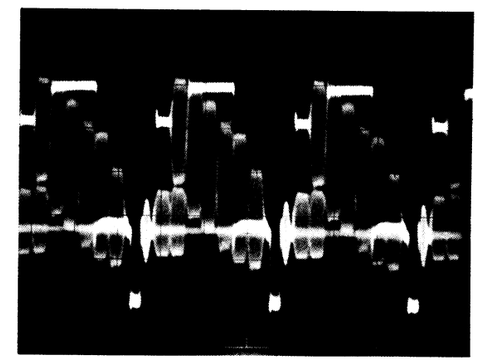

WF4 Point:TP 55 20mV/div. ×10
20μs/div. Mode: PB(SP) Test Tape: F6-A

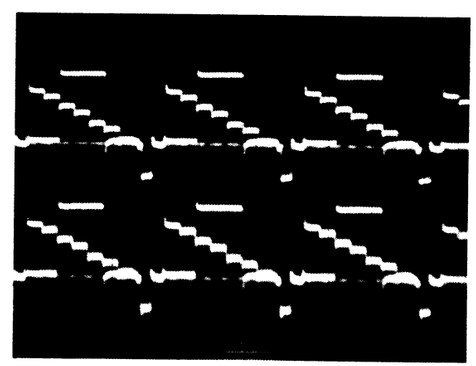

WF5 Point:TP 52 20mV/div. ×10
TP 53 20mV/div. ×10
20μs/div. Mode: PB(SP) Test Tape: F6-A

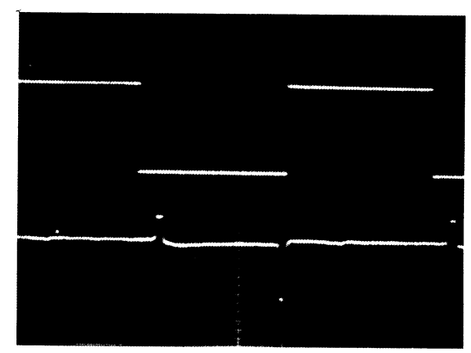

WF6 Point:TP401 0.2V/div. ×10
TP402 0.1V/div. ×10
5 ms/div. Mode: PB(SP) Test Tape: F8-A

SUB

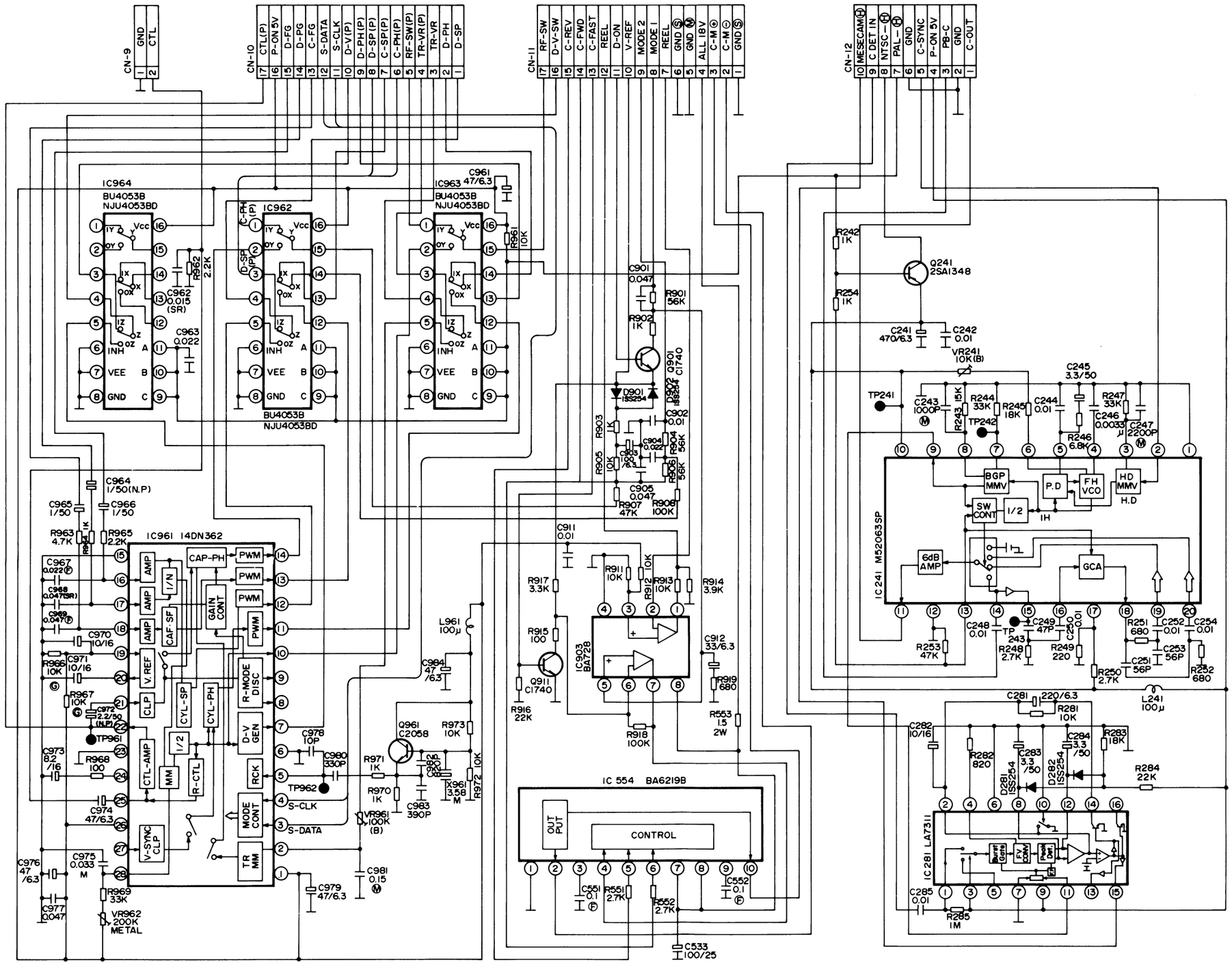
CN-9
GND
CTL
CN-10
CTL(P)
P-ON 5V
D-FG
D-PG
C-FG
S-DATA
S-CLK
D-V(P)
D-PH(P)
D-SP(P)
C-SP(P)
C-PH(P)
RF-SW(P)
TR-VR(P)
TR-VR
D-PH
D-SP
CN-11
RF-SW
D-V-SW
C-REV
C-FWD
C-FAST
REEL
D-ON
V-REF
MODE 2
MODE 1
REEL
GND
GND
ALL 18V
C-M
C-M
GND
CN-12
MESECAM
C DET IN
NTSC
PAL
GND
C-SYNC
P-ON 5V
PB-C
GND
C-OUT
IC964
BU4053B
NJU4053BD
IC962
BU4053B
NJU4053BD
IC963
BU4053B
NJU4053BD
IC961 14DN362
CAP-PH
PWM
AMP
1/N
CAF SF
GAIN CONT
V. REF
CLP
CYL-SP
CYL-PH
R-MODE DISC
D-V GEN
RCK
MODE CONT
TR MM
CTL-AMP
MM
1/2
R-CTL
V-SYNC CLP
S-CLK
S-DATA
IC 554 BA6219B
OUT PUT
CONTROL
IC903 BA728
IC241 M52063SP
BGP MMV
P.D
FH VCO
HD MMV
H.D
SW CONT
1/2
1H
6dB AMP
GCA
IC281 LA7311
Burst Gate
PWM CONV
Pwm DWL
Q241 2SA1348
Q901 C1740
Q911 C1740
Q961 C2058
TP241
TP242
TP243
TP961
TP962
VR241 10K(B)
VR961 100K (B)
VR962 200K METAL
X961 3.58 M
L241 100μ
L961 100μ

PSV

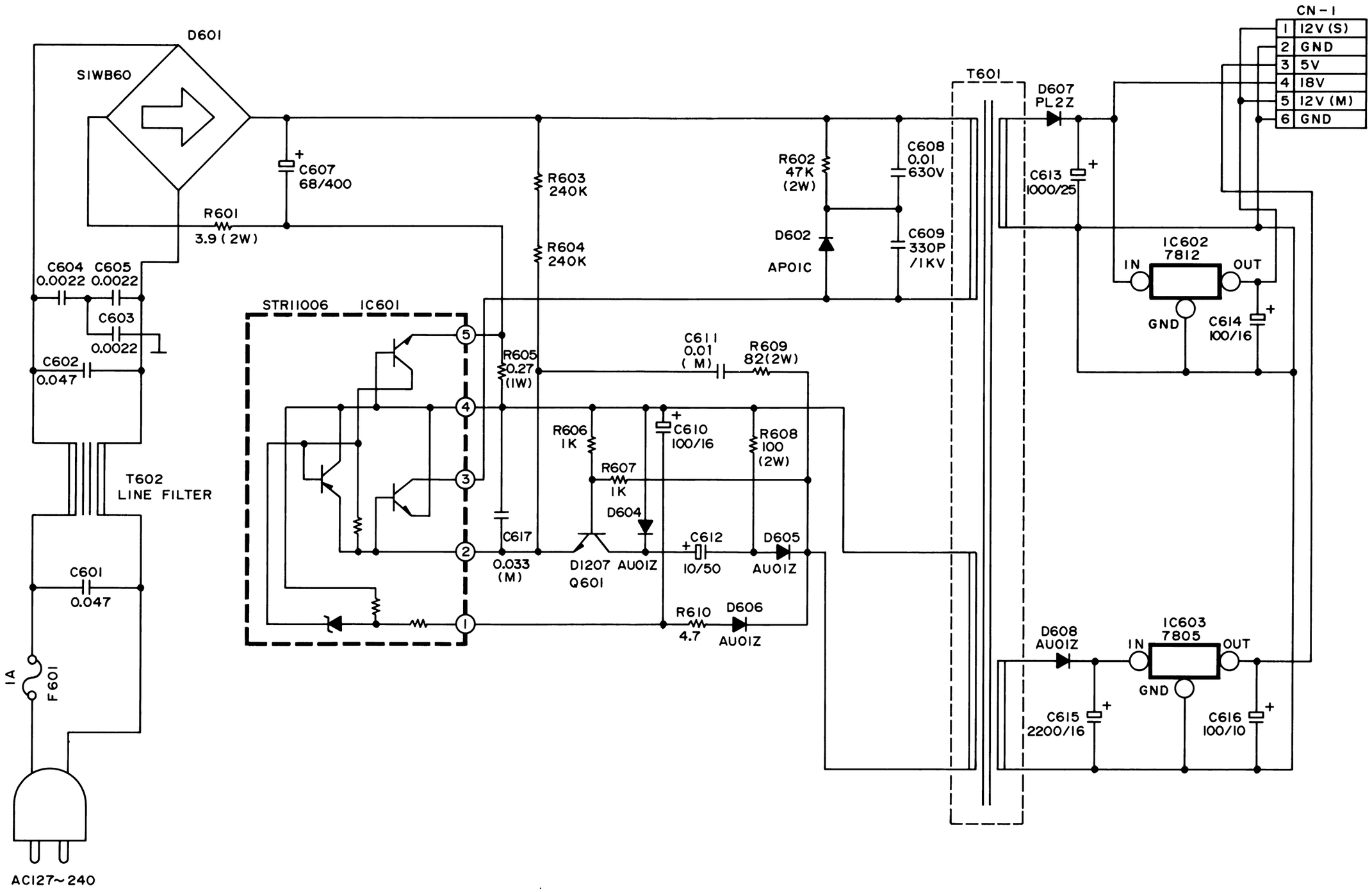
D601
S1WB60
C607
68/400
R601
3.9 (2W)
C604 C605
0.0022 0.0022
C603
0.0022
C602
0.047
T602
LINE FILTER
C601
0.047
1A
F601
AC127~240
STR11006 IC601
R603
240K
R604
240K
R605
0.27
(1W)
C617
0.033
(M)
R606
1K
R607
1K
D604
D1207 AU01Z
Q601
C610
100/16
C611
0.01
(M)
R609
82(2W)
R608
100
(2W)
C612
10/50
D605
AU01Z
R610
4.7
D606
AU01Z
R602
47K
(2W)
D602
AP01C
C608
0.01
630V
C609
330P
/1KV
T601
D607
PL2Z
C613
1000/25
IC602
7812
IN
OUT
GND
C614
100/16
D608
AU01Z
IC603
7805
IN
OUT
GND
C615
2200/16
C616
100/10
CN-1
1 12V (S)
2 GND
3 5V
4 18V
5 12V (M)
6 GND

VS3041

16. IC PIN FUNCTION DESCRIPTION

14DN486 (System Control IC)

Pin No	IN/OUT	Signal name	Function
1	IN	Vss	GND
2	OUT	SYNC	IC Internal Clock
3	IN	REMOCON	Remote Control Serial Signal Input
4	IN	FL-A	Cassette In Start Detector
5	IN	FL-B	Cassette In Start Detector
6	IN	FL-C	Cassette In Start Detector
7	IN	LD-A	Tape Loading Position Detector
8	IN	LD-B	Tape Loading Position Detector
9	IN	LD-C	Tape Loading Position Detector
10	IN	LD-D	Tape Loading Position Detector
11	IN	P 10	Key Scan Signal Input
12	IN	P 11	Key Scan Signal Input
13	IN	P 12	Key Scan Signal Input
14	IN	P 13	Key Scan Signal Input
15	OUT	P 20	Key Scan Signal Output
16	OUT	P 21	Key Scan Signal Output
17	OUT	P 22	Key Scan Signal Output
18	OUT	P 23	Key Scan Signal Output
19	OUT	REW	Rew Display
20	OUT	F.F	F.F Display
21	OUT	PLAY	Play Display
22	OUT	D-PB	Play Control
23	OUT	D-ON	Drum Rotation Output
24	OUT	C-FAST	Capstan Motor High Speed Control Output
25	OUT	C-REV	Capstan Motor Reverse Control Output
26	OUT	C-FWD	Capstan Motor Forward Control Output
27	OUT	A-MUTE	Sound Mute Output
28	OUT	LD-REV	Tape Loading / Cassette Loading Motor Control
29	OUT	LD-FWD	Tape Loading / Cassette Loading Motor Control
30	OUT	PAUSE	Pause Signal Output
31	OUT	P-ON	Power On Control
32	O	REEL	Reel Pulse Input Check
33	IN	END-S	Tape End Position Detector
34	IN	START-S	Tape Start Position Detector
35	OUT	S-DATA	Servo IC Data

Pin No	IN/OUT	Signal name	Function
36	OUT	S-CLK	Servo IC Timing Clock
37	IN	OSC-1	Clock Osillation (3.58MHz) Resonator
38	IN	OSC-2	Clock Osillation (3.58MHz) Resonator
39	—	—	
40	—	—	
41	IN	RST	Reset
42	IN	V_{DD}	Power Terminal "H" Input (5V) Degital Sec.

LB1408 (LED Driver IC)

Pin No	IN/OUT	Signal name	Function
1	OUT	OUT	LED Switch Control
2	IN	IN	Audio Input
3	IN	V_{CC}	Power Terminal
4	OUT	V_{ref}	Reference Vol. Output
5	IN	LED1	LED1 Reference Current Input
6	OUT	D 1	LED Driver 1
7	OUT	D 2	LED Driver 2
8			
9			
10	OUT	D 3	LED Driver 3
11	OUT	D 4	LED Driver 4
12	OUT	D 5	LED Driver 5
13	OUT	D 6	LED Driver 6
14	OUT	D 7	LED Driver 7
15	IN	GND	GND
16	IN	LED2	LED2 Reference Current Input

17. SYSTEM CONTROL TIMING CHART

1. OFF→CASSETTE INSERT→F.F.→STOP→REW→STOP→PLAY

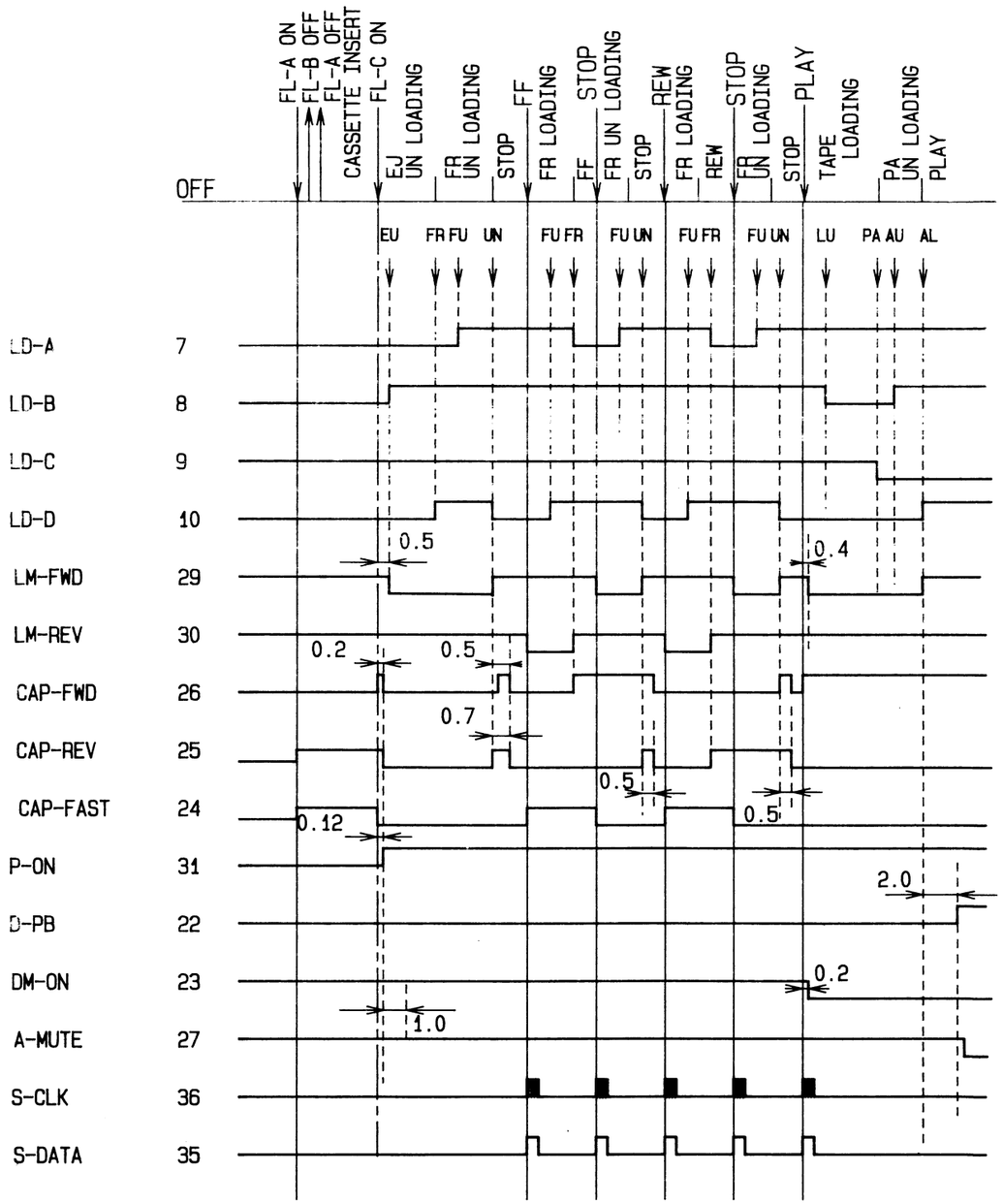

2. PLAY ➤ F.F. ➤ REW (RS) ➤ PLAY ➤ STOP ➤ EJECT

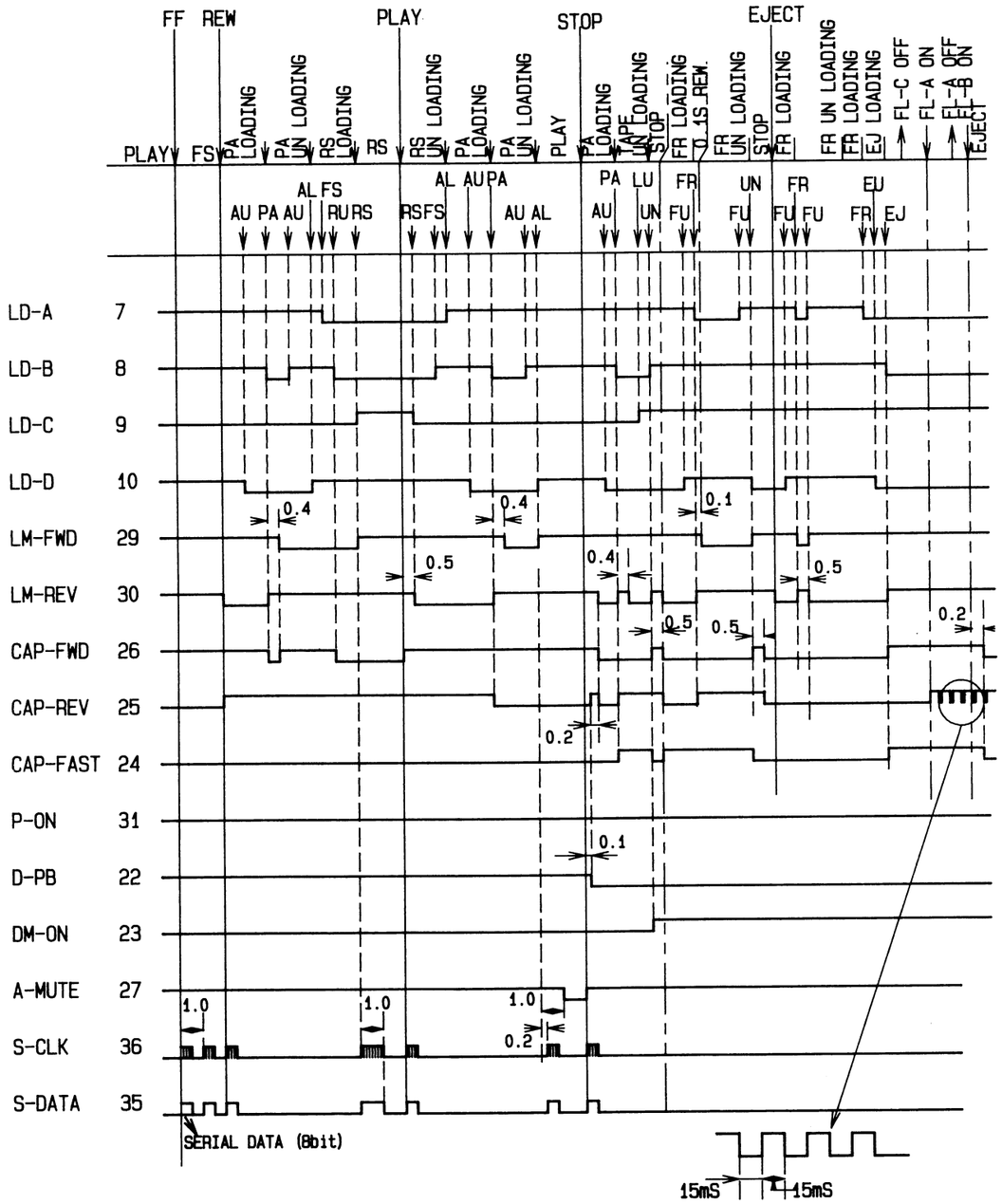

18. LEAD IDENTIFICATIONS

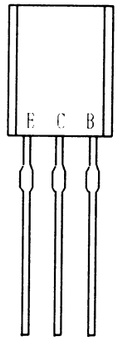

2SA608
2SA933
2SA1317
2SA1346
2SB892
2SB1010

2SC536
2SC1740
2SC2058
2SC2839
2SC3400
2SD1012

2SD1207
2SD1384
2SD1468
DTA114
DTA124
DTC124

AN7812
AN7805
NJM7812
NJM7805

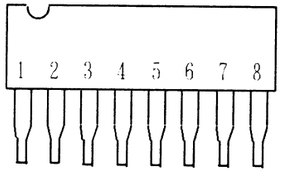

BA328LN
BA10393N

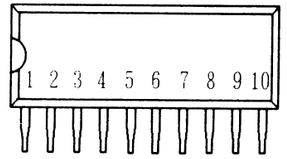

BA6209N

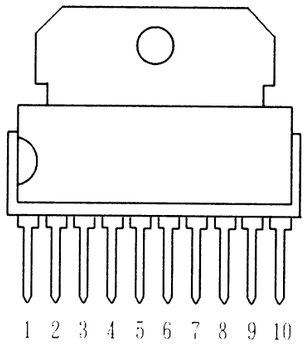

BA6219B

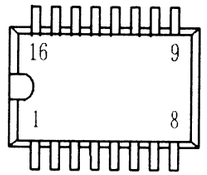

BU4053
LB1408
NJU4053BD

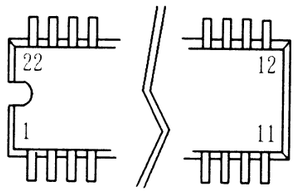

LA7320

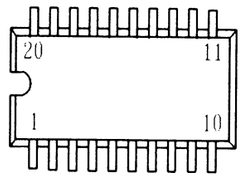

M52063SP

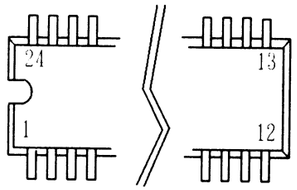

LA7331

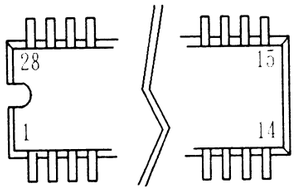

FEVSE14DN362
FEVSE14DN363

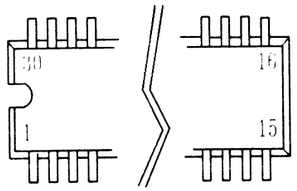

LA7326

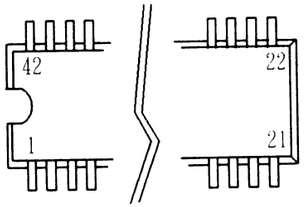

FEVSY14DN486

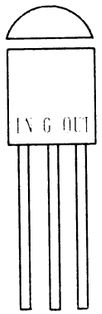

PST529

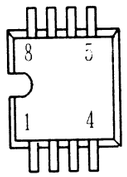

BA728
LC8992
MSM7401

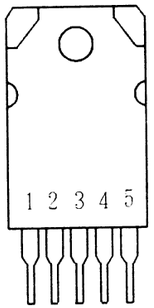

STR11006

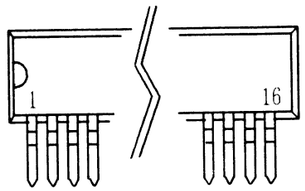

LA7311

19. EXPLODED VIEWS

CABINET EXPLODED VIEW

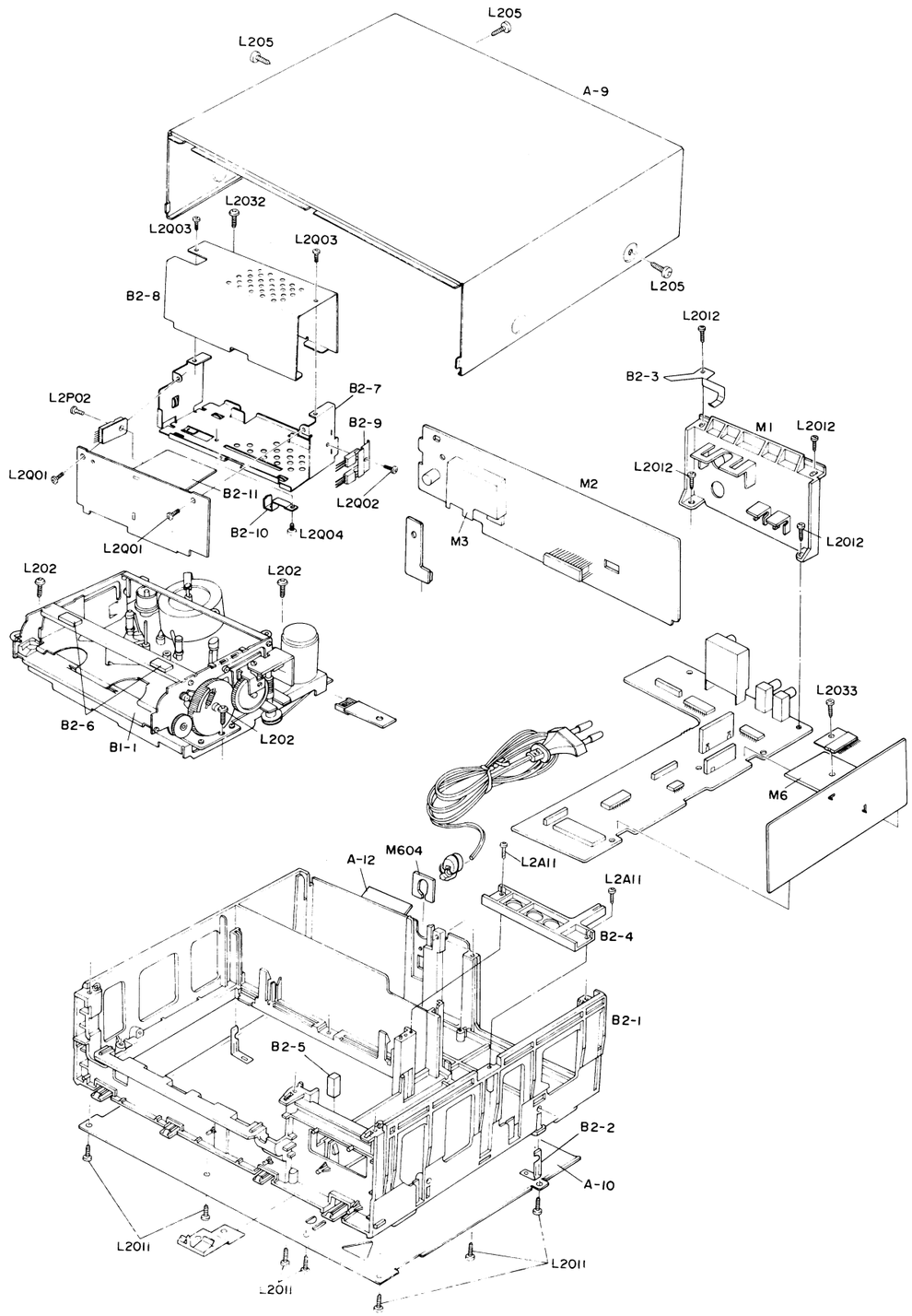

FRONT PANEL EXPLODED VIEW

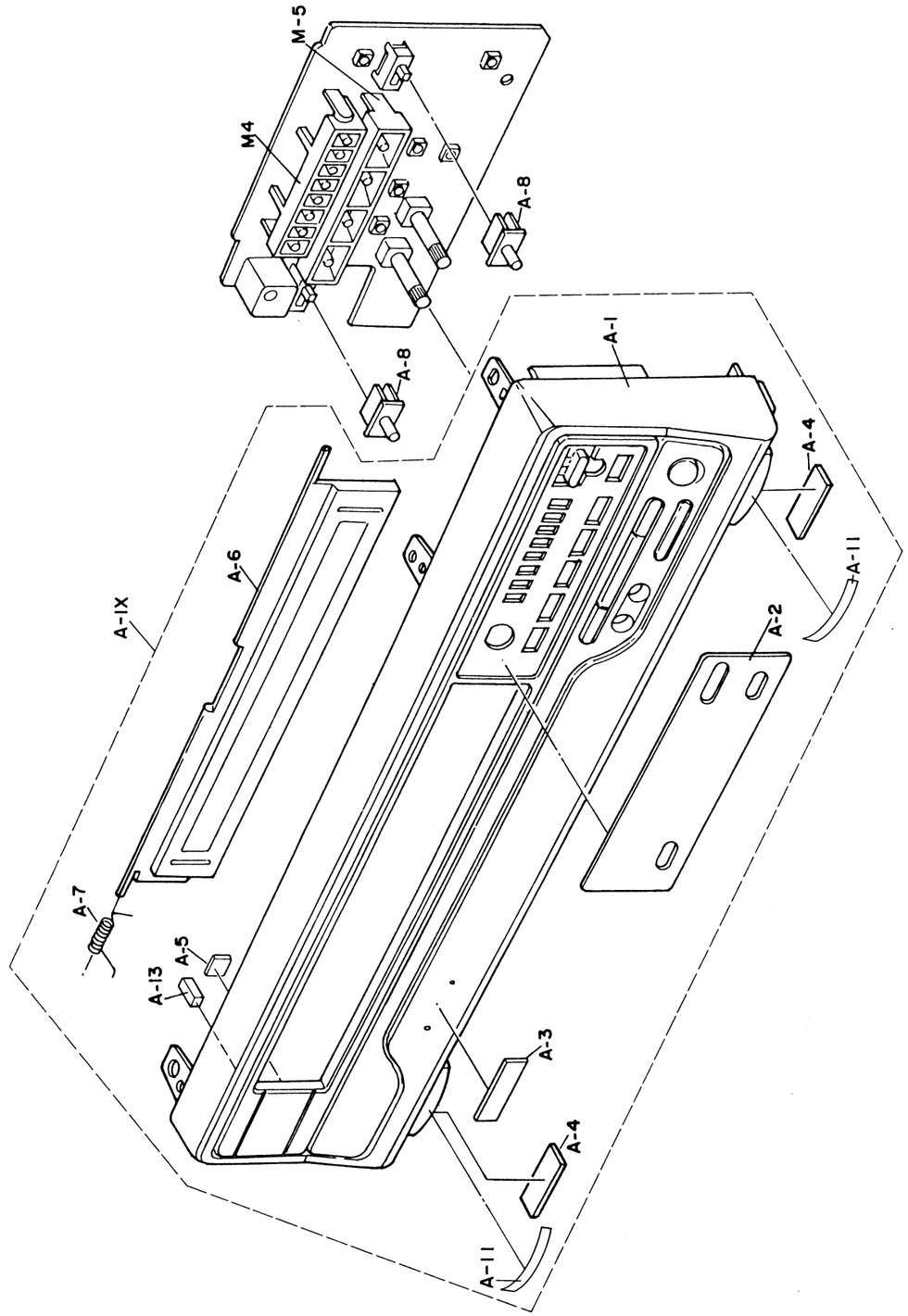

DECK EXPLODED VIEW

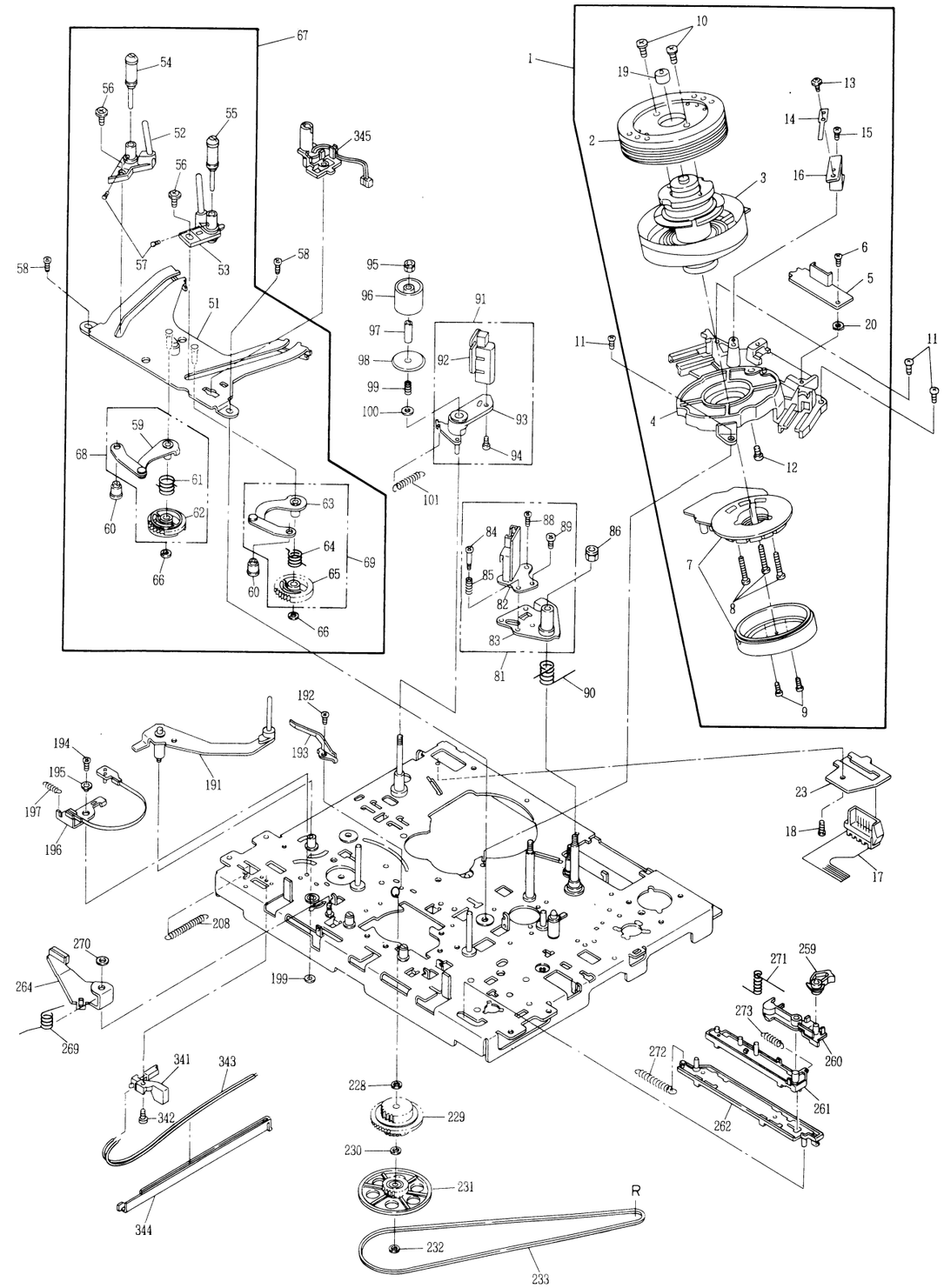

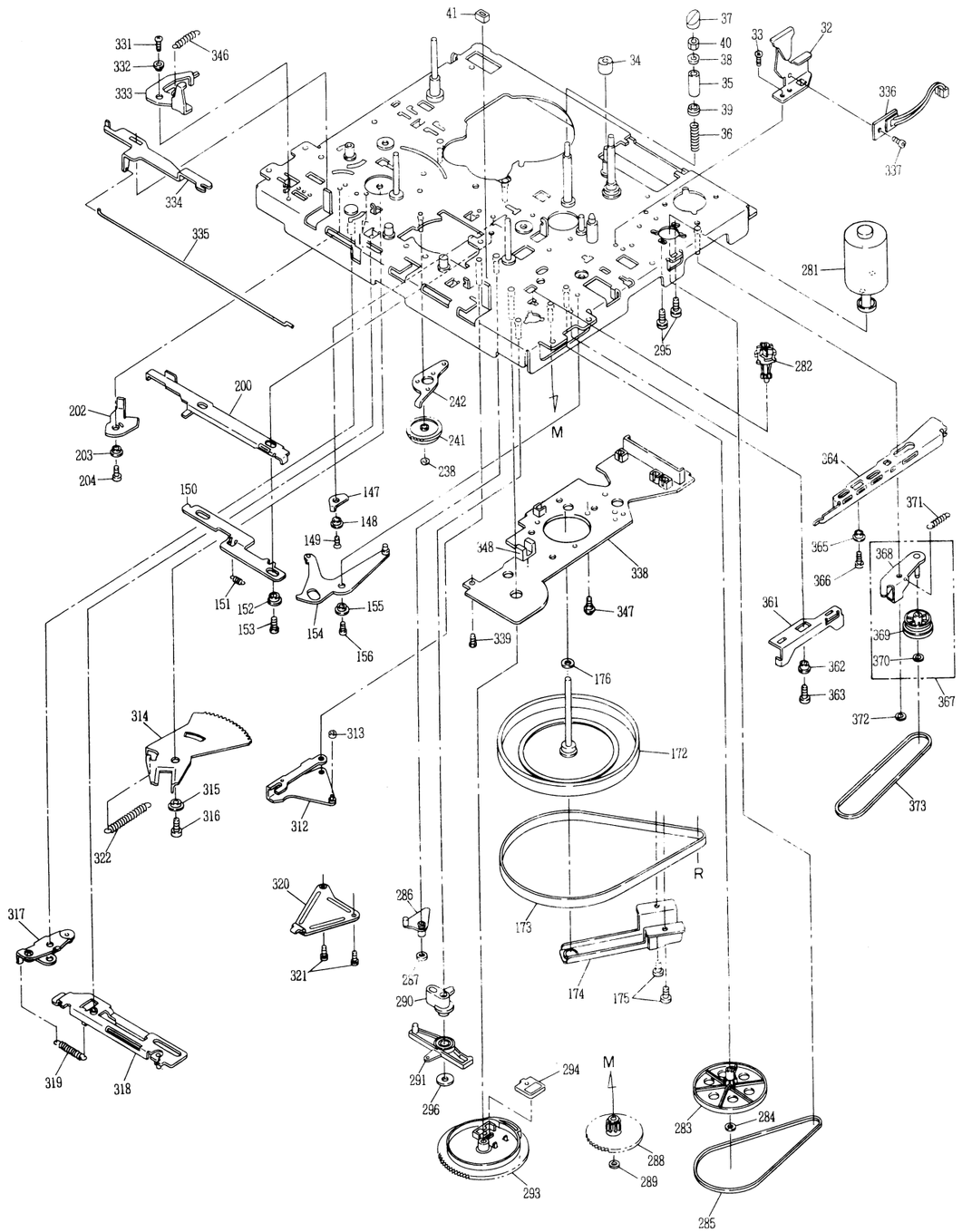
41
37
40
38
35
39
36
33
32
34
331
332
333
346
334
335
336
337
281
295
282
202
200
203
204
242
241
238
M
364
371
147
148
149
150
151
152
153
154
155
156
348
338
339
347
365
366
368
369
370
367
361
362
363
372
373
176
172
173
174
175
R
314
315
316
322
313
312
320
321
317
319
318
286
287
290
291
296
293
294
M
288
289
283
284
285

19-4

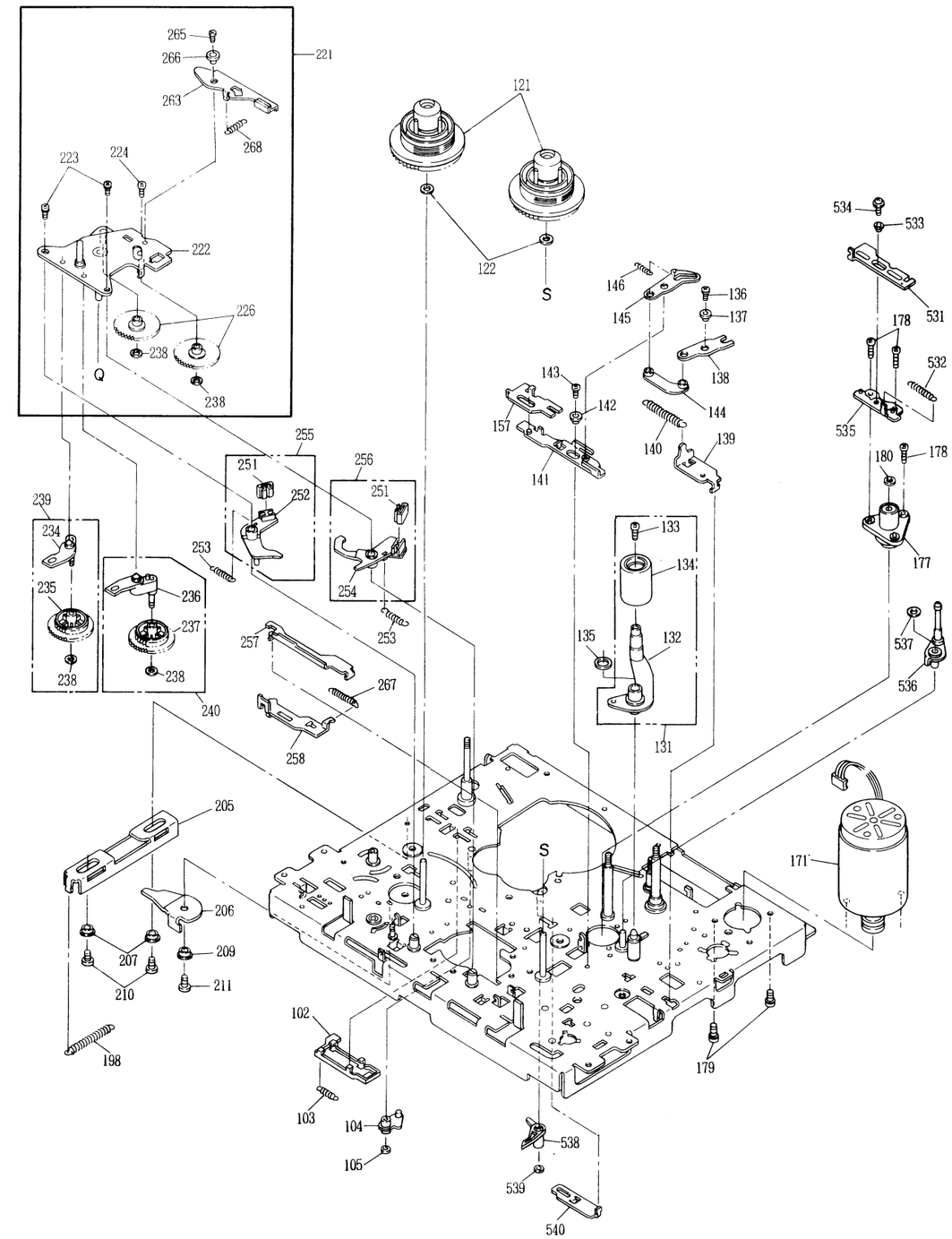
265
266
263
268
221
223
224
222
226
238
Q
121
122
S
534
533
531
532
535
178
180
177
536
537
146
145
136
137
138
144
140
139
143
142
157
141
133
134
135
132
131
255
251
252
256
254
253
239
234
235
236
237
240
257
267
258
205
206
207
209
210
211
198
102
103
104
105
538
539
540
171
179

19-5

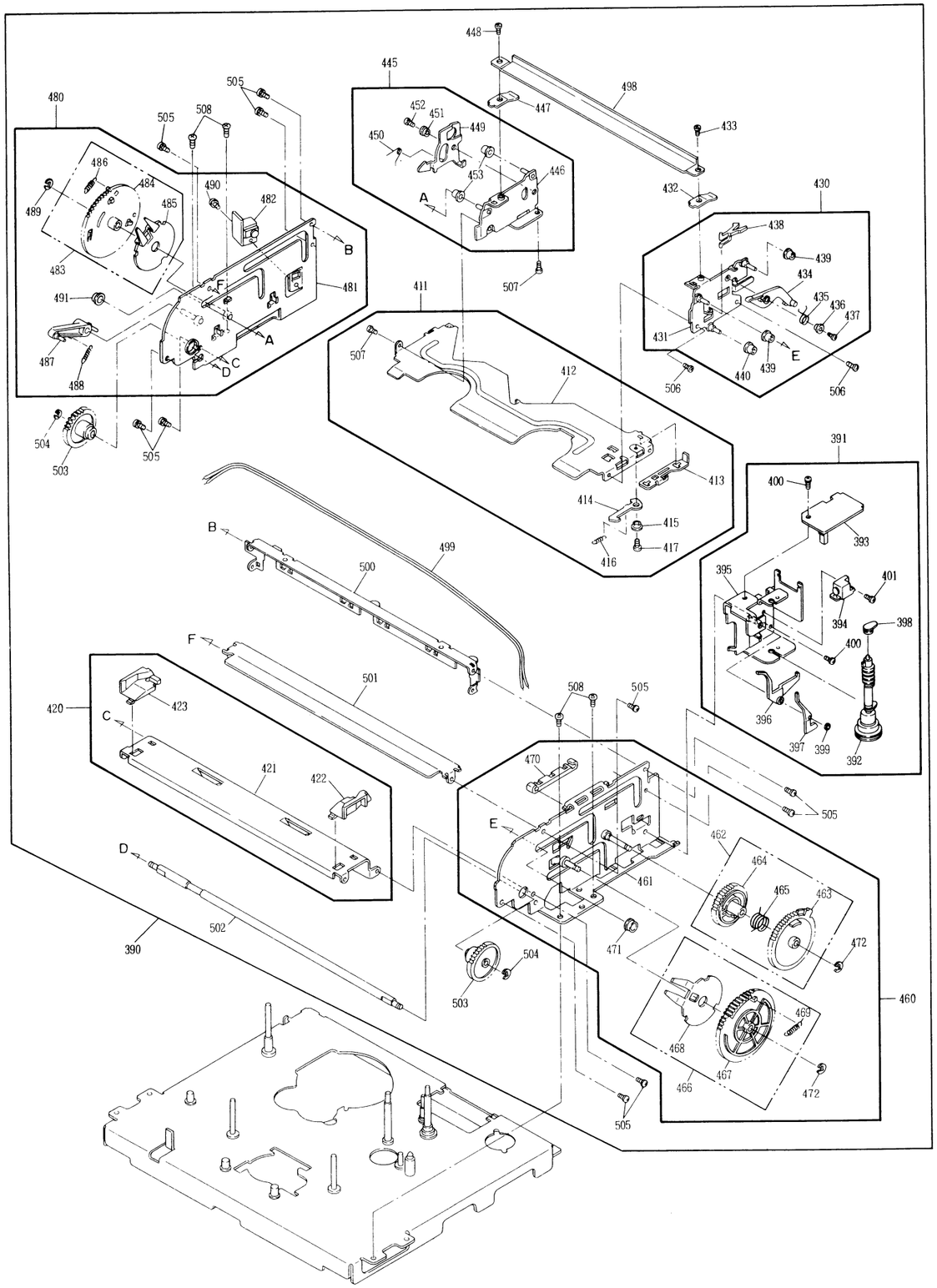

20. MECHANICAL PARTS LIST

MODEL NO. F1

NOTE
(A):SERIAL NO. D48010001~D48011985
(B):SERIAL NO. D48011985~

REF. NO.		DESCRIPTION		PART NO.
A- 1X		FRONT ASS'Y		0VM200603
A- 1		FRONT		0VM200603X
A- 2		PLATE, MODE		0VM401645
A- 3		BADGE		6D52254
A- 4		FOOT		6E50453
A- 5		CUSHION, DOOR		0VM400346
A- 6		DOOR, CASSETTE		0VM402107
A- 7		SPRING, DOOR		6V50109
A- 8		KNOB, AUTO REPEAT		6D52263
A- 9		CASE, TOP		6G50092
A-10		PANEL, BOTTOM		0VM200019
A-11		FILM, INSULATOR		0VM402167
A-12	⚠	LABEL, RATING	(A)	0VM402322
A-12	⚠	LABEL, RATING	(B)	0VM402108
A-13		SPACER		0VM400719
B1- 1		DECK ASS'Y		0VDK00082
B2- 1		CABINET, MAIN SSC-P/B		6C50587
B2- 2		METAL GROUND (L) (V3)		6S50356
B2- 3		PLATE, GRAND		0VM400227
B2- 4		HOLDER, PCB		0VM300683
B2- 5		SPACER, PCB		0VM401598
B2- 6		SPACER, DECK		0VM401389
B2- 7		SHIELD, BOTTOM		0VM200561
B2- 8		SHIELD, TOP	(A)	0VM200562
B2- 8		SHIELD, TOP	(B)	0VM200653
B2- 9		ANGLE		0VM401935
B2-10		HOLDER		0VM402185
B2-11		HEAT SINK, IC		0VM402223
M 1		JACK BOARD ASS'Y		0VM300230
M 2		SHIELD, BOTTOM P/B		0VM400068
M 3		PLATE, TOP SHIELD		6S50372
M 4		HOLDER, LED(LEVEL)		6D52258
M 5		HOLDER, L.E.D.		0VM300426
M 6		HEATSINK, IC		6S50527
M604		HOLDER, AC CORD		6S50286

REF. NO.	DESCRIPTION	PART NO.
L202	SCREW, P-TIGHT, WASHER HEAD M3X10	GCMP3100
L205	SCREW, P-TIGHT, BIND HEAD M4X12	GBKP4120
L2011	SCREW, B-TIGHT, BIND HEAD M3X10	GBMB3100
L2012	SCREW, P-TIGHT, BIND HEAD M3X10	GBMP3100
L2032	SCREW, P-TIGHT, BIND HEAD M4X12	GBMP4120
L2033	SCREW, TAPPING, BIND HEAD M3X10	DBM13100
L2A11	SCREW, P-TIGHT, BIND HEAD M3X10	GBMP3100
L2P02	SCREW, A-TIGHT, BIND HEAD M3X8	DBM13080
L2Q01	SCREW, S-TIGHT, BIND HEAD M3X5	GBMS3050
L2Q02	SCREW, S-TIGHT, BIND HEAD M3X5	GBMS3050
L2Q03	SCREW, S-TIGHT, BIND HEAD M3X5	GBMS3050
L2Q04	SCREW, S-TIGHT, BIND HEAD M3X5	GBMS3050
⚠	OWNER'S MANUAL	(A) 0VMN00631
⚠	OWNER'S MANUAL	(B) 0VMN00556
	REMOTE CONTROL UNIT	1813571
	RF CABLE	1750762 5750109

K2592ME

MODEL NO. F2

NOTE
(A):SERIAL NO. D48010001～D48011985
(B):SERIAL NO. D48011985～

REF. NO.		DESCRIPTION	PART NO.
A- 1X		FRONT ASS'Y	0VM200611
A- 1		FRONT	0VM200611X
A- 2		PLATE, MODE	0VM401645
A- 3		BADGE	6D52254
A- 4		FOOT	6E50453
A- 5		CUSHION, DOOR	0VM400346
A- 6		DOOR, CASSETTE	0VM402107
A- 7		SPRING, DOOR	6V50109
A- 8		KNOB, AUTO REPEAT	6D52263
A- 9		CASE, TOP	6G50092
A-10		PANEL, BOTTOM	0VM200019
A-11		FILM, INSULATOR	0VM402167
A-12	⚠	LABEL, RATING	(A) 0VM402323
A-12	⚠	LABEL, RATING	(B) 0VM402155
A-13		SPACER	0VM400719
B1- 1		DECK ASS'Y	0VDK00082
B2- 1		CABINET, MAIN SSC-P/B	6C50587
B2- 2		METAL GROUND (L) (V3)	6S50356
B2- 3		PLATE, GRAND	0VM400227
B2- 4		HOLDER, PCB	0VM300683
B2- 5		SPACER, PCB	0VM401598
B2- 6		SPACER, DECK	0VM401389
B2- 7		SHIELD, BOTTOM	0VM200561
B2- 8		SHIELD, TOP	(A) 0VM200562
B2- 8		SHIELD, TOP	(B) 0VM200653
B2- 9		ANGLE	0VM401935
B2-10		HOLDER	0VM402185
B2-11		HEAT SINK, IC	0VM402223
M 1		JACK BOARD ASS'Y	0VM300103
M 2		SHIELD, BOTTOM P/B	0VM400068
M 3		PLATE, TOP SHIELD	6S50372
M 4		HOLDER, LED(LEVEL)	6D52258
M 5		HOLDER, L.E.D.	0VM300426
M 6		HEATSINK, IC	6S50527
M604		HOLDER, AC CORD	6S50286

REF. NO.	DESCRIPTION	PART NO.
L202	SCREW, P-TIGHT, WASHER HEAD M3X10	GCMP3100
L205	SCREW, P-TIGHT, BIND HEAD M4X12	GBKP4120
L2011	SCREW, B-TIGHT, BIND HEAD M3X10	GBMB3100
L2012	SCREW, P-TIGHT, BIND HEAD M3X10	GBMP3100
L2032	SCREW, P-TIGHT, BIND HEAD M4X12	GBMP4120
L2033	SCREW, TAPPING, BIND HEAD M3X10	DBM13100
L2A11	SCREW, P-TIGHT, BIND HEAD M3X10	GBMP3100
L2P02	SCREW, A-TIGHT, BIND HEAD M3X8	DBM13080
L2Q01	SCREW, S-TIGHT, BIND HEAD M3X5	GBMS3050
L2Q02	SCREW, S-TIGHT, BIND HEAD M3X5	GBMS3050
L2Q03	SCREW, S-TIGHT, BIND HEAD M3X5	GBMS3050
L2Q04	SCREW, S-TIGHT, BIND HEAD M3X5	GBMS3050
⚠	OWNER'S MANUAL	(A) OVMN00632
⚠	OWNER'S MANUAL	(B) OVMN00568
	REMOTE CONTROL UNIT	1813571
	RF CABLE	1750762 5750109

21. DECK PARTS LIST

Ref No.	Description	MFR' Part No.	Q'ty
1	Cylinder Assembly	8059-82-40A	1
2	Drum, Upper	8059-01-18	1
3	Drum Assembly, Lower	8059-01-304	1
4	Mount, Cylinder	8059-01-01	1
5	P.C.B. Assembly, Video Out	8059-01-305	1
6	Screw, W Sems, M2.6 ×6	9973-00-00	1
7	Motor TM84	6004-09-02	1
8	Screw, C-tight, M2.6×20	9055-00-00	3
9	Screw, Sems, M2.6 ×6	9098-00-00	2
10	Screw, Bind Sems, M3×8	9972-00-00	2
11	Screw, C-tight, M3×10	9205-00-00	3
12	Screw, B-tight M2×6	9999-18-18	1
13	Screw, Cap, M2.6×3	9665-00-00	1
*14	Flat Spring, Drum Ground	8059-01-54	1
15	Screw, C-tight, M2.6×5	9192-00-00	1
16	Bracket, Drum Ground	8059-01-02	1
17	P.C.B. Assembly, DM	8059-01-347	1
18	Screw, C-tight, M2.6×5	9192-00-00	1
*19	Drum Ground	8059-01-23	1
20	Washer, Toothed Lock, M2.6	9715-00-00	1
23	Connector Bracket	8059-01-71	1
32	Open Angle	8059-02-301	1
33	Screw, C-tight, M2.6×4	9191-00-00	1
34	Adjuster, Tracking	8059-02-29	1
35	Guide, Tape	8000-03-14	1
36	Spring, Tape Guide	8059-02-26	1
37	Cap, Guide	8000-03-19	1
38	Flange (C), Tape Guide	8000-03-28	1
39	Flange (D), Tape Guide	8000-03-29	1
40	Nut M3.0	9453-00-00	1
41	Rubber, Damper	8059-02-23	1
51	Loading Base	8059-03-501	1
52	Block (L), Loading	8059-03-04	1
53	Block (R), Loading	8059-03-05	1
54	Roller Post ST	8000-03-37	1
55	Roller Post ST	8000-03-37	1
56	Screw, Cup, M2.6×3	9665-00-00	2
57	Screw, Set, M2.0×3 (Plane Type)	9550-00-00	2
58	Screw, C-tight, M2.6×5	9192-00-00	2
59	Plate (L), Loading	8059-03-502	1
60	Boss, Loading	8059-03-14	2
61	Spring (L), Loading Gear	8059-03-08	1
62	Gear (L), T Loading	8059-03-06	1
63	Plate (R), Loading	8059-03-503	1
64	Spring (R), Loading Gear	8059-03-09	1
65	Gear (R), T Loading	8059-03-07	1
66	Washer, Polyslider, φ2.6 ×φ6 ×t0.5	9884-00-00	2
67	Loading Base Assembly	8059-03-301	1
68	Loading Gear(L) Assembly	8059-03-302	1
69	Loading Gear(R) Assembly	8059-03-303	1

* Replace these parts in pairs.

Ref No.	Description	MFR' Part No.	Q' ty
81	Head Base Assembly	8059-04-307	1
82	Head, ACE	6204-15-08	1
83	Base, Head	8059-04-502	1
84	Screw, Azimuth Spring	8000-06-26	1
85	Spring, Azimuth	8000-06-04	1
86	Nut, Nylon M3	9953-00-00	1
88	Screw, M2.6 ×7	9705-00-00	1
89	Screw, Set, M3×6	9999-20-25	1
90	Spring, Head	8059-04-15	1
91	Plate Assembly, Full Erase	8059-04-302	1
92	Head, Full Erase	6204-15-03	1
93	Plate, Full Erase	8059-04-04	1
94	Screw, Flange Bind, M2×3	9114-00-00	1
95	Nut, Nylon M3	9953-00-00	1
96	Roller, Impedance	8059-04-05	1
97	Sleeve, Impedance Roller	8059-04-06	1
98	Flange (A), Tape Guide	8059-04-07	1
99	Spring, Tape Guide Flange	8059-04-09	1
100	Washer, Plane φ3 ×φ8 ×t0.5	9337-00-00	1
101	Spring, FE Plate	8059-04-08	1
102	Plate, FE Slide	8059-04-10	1
103	Spring, FE Actuate	8059-04-12	1
104	Lever, FE Actuate	8059-04-11	1
105	Washer, Polyslider, φ2.1 ×φ5 ×t0.5	9876-00-00	1
121	Reel Assembly	8059-05-301	2
122	Washer, φ3.1 ×φ6 ×t0.5	9912-00-00	2
131	Arm Assembly, Pinch Roller	8059-06-301	1
132	Arm Pinch Roller	8059-06-501	1
133	Screw, M2.6 ×4	9038-00-00	1
134	Roller (A), Pinch	8000-09-22	1
135	Washer, Polyslider, φ5 ×φ8 ×t0.5	9999-03-11	1
136	Screw, Sems, M2.6 ×4	9096-00-00	1
137	Collar	8059-06-18	1
138	Angle, P Actuate	8059-06-05	1
139	Holder, P Angle	8059-06-19	1
140	Spring, P Roller	8059-06-20	1
141	Plate (A), P Slide	8059-06-24	1
142	Collar	8059-06-18	1
143	Screw, C-tight, M2.6×5	9192-00-00	1
144	Joint Plate	8059-06-06	1
145	Arm, P Actuate	8059-06-04	1
146	Spring, P Actuate Arm	8059-06-09	1
147	Crank, P	8059-06-12	1
148	Collar, P Crank	8059-06-13	1
149	Screw, C-tight FH (For Camera), M2.6×4	9999-18-10	1
150	Slider, P	8059-06-10	1
151	Spring, P Slider	8059-06-23	1
152	Collar, P Slider	8059-06-11	1
153	Screw, C-Tapping, M2.6×5	9192-00-00	1
154	Lever, P Cam	8059-06-502	1
155	Collar, P Cam Lever	8059-06-17	1
156	Screw, C-tight, M2.6×5	9192-00-00	1
157	Plate (B), P Slide	8059-06-25	1

Ref No.	Description	MFR' Part No.	Q' ty
171	Motor Assembly, Capstan	8059-07-302	1
172	Capstan, Flywheel	8059-07-14	1
173	Belt, Main	8059-07-10	1
174	Angle Assembly, Flywheel	8059-07-303	1
175	Screw, C-tight, M3×5	9202-00-00	2
176	Washer, φ3.1 ×φ6 ×t0.5	9912-00-00	1
177	Housing Assembly, Metal	8059-07-301	1
178	Screw, C-tight, M2.6×8	9195-00-00	3
179	Screw, Sems, M3 ×4	9105-00-00	2
180	Nylon Washer 2.92 ×5 ×0.5	9999-06-03	1
191	Arm, Back Tension	8059-08-501	1
192	Screw, C-tight, M2.6×4	9191-00-00	1
193	Support, Back Tension	8059-08-09	1
194	Screw, C-tight, M2.6×4	9191-00-00	1
195	Collar, Band Holder	8059-08-15	1
196	Band, BT	8059-08-302	1
197	Spring, Band Holder	8059-08-17	1
198	Spring, Back Tension	8059-08-13	1
199	Washer, Polyslider, φ2.1 ×φ4 ×t0.5	9999-03-15	1
200	Plate, BT Change	8059-08-10	1
202	Lever, BT Return	8059-08-23	1
203	Collar	8059-06-18	1
204	Screw, C-tight, M2.6×5	9192-00-00	1
205	Plate, BT Actuate	8059-08-19	1
206	Lever, BT Actuate	8059-08-18	1
207	Collar, BT Actuate Plate	8059-08-21	2
208	Spring, BT Actuate Plate	8059-08-20	1
209	Collar	8059-06-18	1
210	Screw, S-tight (For Camera) M2.6×3.5	9840-00-00	2
211	Screw, C-tight M2.6 ×5	9192-00-00	1
221	Plate Assembly	8059-09-312	1
222	Plate Semi Assembly	8059-09-503	1
223	Screw, Sems, M2 ×4	9077-00-00	2
224	Screw, C-tight, M2.6×4	9192-00-00	1
226	Gear, Reel Drive	8059-09-06A	2
228	Washer, Nylon, φ3.1 ×φ6 ×t0.3	9853-00-00	1
229	Clutch Assembly	8059-09-311	1
230	Washer, Nylon, φ2.98×φ6 ×t0.3	9999-06-04	1
231	Pulley Assembly, Middle	8059-09-301	1
232	Washer, Polyslider, φ2.6 ×φ6 ×t0.5	9884-00-00	1
233	Belt, Drive	8059-09-17	1
234	Arm Assembly, P Gear	8059-09-303	1
235	Gear, Play	8059-09-20A	1
236	Arm Assembly, RF Gear	8059-09-304	1
237	Gear, FF	8059-09-22A	1
238	Washer, Polyslider, φ1.6 ×φ3.8 ×t 0.3	9743-00-00	3
239	Gear Assembly, P	8059-09-314	1
240	Gear Assembly, RF	8059-09-315	1
241	Return Gear Assembly	8059-09-313	1
242	Retrun Arm	8059-09-53	1
251	Shoe, Brake	8059-10-19	2
252	Arm, S Brake	8059-10-01	1
253	Spring, Brake Arm	8059-10-02	2

Ref No.	Description	MFR' Part No.	Q' ty
254	Arm, T Brake	8059-10-03	1
255	Arm Assembly, S Brake	8059-10-301	1
256	Arm Assembly, T Brake	8059-10-302	1
257	Lifter, Brake	8059-10-16	1
258	Actuator, L Brake	8059-10-17	1
259	Hook, Trigger	8059-10-14	1
260	Lever, Trigger	8059-10-13	1
261	Plate, Brake	8059-10-11	1
262	Brake Actuate, Base	8059-10-09	1
263	Brake, Take-up soft	8059-10-303	1
264	Brake, S Soft	8059-10-304	1
265	Screw, SL FH (For Camera), M2 ×3	9974-00-00	1
266	Collar, Take-up Soft Brake Arm	8059-10-07	1
267	Spring, L Brake Actuator	8059-10-18	1
268	Spring, Take-up Soft Brake Arm	8059-10-06	1
269	Spring, S Soft Brake	8059-10-22	1
270	Washer, Polyslider, φ2.1 ×φ5 ×t0.5	9876-00-00	1
271	Spring, Trigger Lever	8059-10-23	1
272	Brake Actuate Base Spring	8059-10-10	1
273	Brake Plate Spring	8059-10-12	1
281	LM Assembly	8059-11-301	1
282	Bearing Assembly, Trigger	8059-11-302	1
283	Pulley, Loading	8059-11-03	1
284	Washer, Polyslider, φ1.6 ×φ3.8 ×t0.3	9743-00-00	1
285	Belt, Loading	8059-11-06	1
286	Arm (B), Search	8059-11-12	1
287	Washer, Polyslider, φ2.6 ×φ6 ×t0.5	9884-00-00	1
288	Gear, Loading	8059-11-04	1
289	Washer, Polyslider, φ2.1 ×φ5 ×t0.5	9876-00-00	1
290	Arm, Brake Actuate	8059-11-13	1
291	Arm, Eject Actuate	8059-11-14	1
293	Cam, Loading	8059-11-01	1
294	Brush, S	8059-11-02	1
295	Screw, C-tight, M3×4	9105-00-00	2
296	Washer, Polyslider, φ 2.6×φ8 ×t 0.5	9999-03-10	1
312	Lever Semi Assembly, Loading	8059-12-501	1
313	Roller, Cam	8059-12-13	1
314	Plate, Loading Gear	8059-12-09	1
315	Collar, Loading Gear Plate	8059-12-10	1
316	Screw, C-tight, M3×6	9203-00-00	1
317	Lever Semi Assembly, Loading Actuate	8059-12-502	1
318	Plate, Semi Assembly, Loading Actuate	8059-12-503	1
319	Spring, Loading Actuate	8059-12-05	1
320	Plate, Loading Lever Reinforce	8059-12-11	1
321	Screw, Sems, M2 ×5	9078-00-00	2
322	Spring, L Gear Plate	8059-12-12	1
331	Not Used		
332	Not Used		
333	Not Used		
334	Not Used		
335	Not Used		
336	Sensor, DEW	6808-08-04	1
337	Screw, Sems, M2.6 ×4	9096-00-00	1

Ref No.	Description	MFR' Part No.	Q' ty
338	Plate, Base	8059-13-307	1
339	Screw, S-tight (For Camera), M2.6×5	9691-00-00	1
341	Not Used		
342	Not Used		
343	Not Used		
344	Not Used		
345	Lamp Holder Assembly	8059-13-306	1
346	Not Used		
347	Coller, Screw	8059-13-17	1
361	Actuator, Eject	8059-15-08	1
362	Collar	8059-06-18	1
363	Screw, C-tight, M2.6×5	9192-00-00	1
364	Plate, L Brake	8059-15-07	1
365	Collar	8059-06-18	1
366	Screw, C-tight, M2.6×5	9192-00-00	1
367	Arm Assembly, E Idler	8059-15-303	1
368	Arm Semi Assembly, E Idler	8059-15-502	1
369	Pulley, Eject	8059-15-15	1
370	Washer, Polyslider, φ1.6 ×φ3.8 ×t0.3	9743-00-00	1
371	Spring, Idler Arm	8059-15-11	1
372	Washer, Polyslider, φ2.1 ×φ6 ×t0.5	9876-00-00	1
373	Belt, Front Loading	8059-15-06	1
390	Loading Assembly, Front	8059-16-337	1
391	Bracket Assembly, Cassette Load	8059-16-318	1
392	Clutch Assembly, Front Loading	8059-16-319	1
393	P.C.B. Assembly, Front Loading	8059-16-320	1
394	Sensor, P.C.B. (RM)	8059-16-316	1
395	Bracket Semi Assembly, Cassette Load	8059-16-506	1
396	Lever, IN SW	8059-16-34	1
397	Lever, S SW	8059-16-33	1
398	Bearing (A), F Worm	8059-16-06	1
399	Washer, Polyslider, φ1.6 ×φ3.8 ×t0.3	9743-00-00	1
400	Screw, Sems, M2.6 ×4	9096-00-00	2
401	Screw, Sems, M2 ×5	9078-00-00	1
411	Holder Assembly, Cassette	8059-16-306	1
412	Holder, Cassette	8000-22-03	1
413	Plate, Slide	8000-22-13	1
414	Plate (A), C Lock	8000-22-12	1
415	Collar	8059-06-18	1
416	Spring, Lock	8059-16-29	1
417	Screw, SL (For Camera), M2.6 ×3	9968-00-00	1
420	Angle Assembly, Front	8059-16-307	1
421	Angle, Front	8059-16-18	1
422	Guide (R), Tape	8059-16-25	1
423	Guide (L), Tape	8059-16-24	1
430	Plate (R) Assembly, Side	8059-16-308	1
431	Plate (R), Side	8059-16-502	1
432	Plate, Cassette Push	8059-16-28	1
433	Screw (For Camera), M2.3×2	9833-00-00	1
434	Lever, Open	8000-22-25	1
435	Spring, Open Lever	8000-22-44	1
436	Lever Collar, Open	8000-22-42	1
437	Screw, SL (For Camera), M2×4	9967-00-00	1

Ref No.	Description	MFR' Part No.	Q' ty
438	Lever, Lock Release	8000-22-16	1
439	Roller, Guide	8000-22-75	2
440	Roller, Guide	8000-22-23	1
445	Plate (L) Assembly, Side	8059-16-309	1
446	Plate (L), Side	8059-16-503	1
447	Plate, Cassette Push	8059-16-28	1
448	Screw (For Camera), M2.3×2	9833-00-00	1
449	Plate (L), C Lock	8000-22-66	1
450	Spring (L), Lock Plate	8059-16-30	1
451	Collar, Lock Plate	8000-19-63	1
452	Screw (For Camera), M2×2.5	9966-00-00	1
453	Roller, Guide	8000-22-75	2
460	Frame (R) Assembly	8059-16-339	1
461	Frame (R)	8059-16-507	1
462	Wheel Assembly, Worm	8059-16-321	1
463	Wheel, Worm	8059-16-36	1
464	Gear, Friction	8059-16-45	1
465	Spring, Friction	8059-16-31	1
466	Gear (R) Assembly, Lift	8059-16-312	1
467	Gear (R), Lift	8000-22-15	1
468	Arm, Lift	8000-22-11	1
469	Spring, LP	8000-22-45	1
470	Guide, Open Lever	8000-22-26	1
471	Sleeve, Guide	8000-22-24	1
472	E Ring S 2.5	9504-00-00	2
480	Frame (L) Assembly	8059-16-338	1
481	Frame (L)	8059-16-508	1
482	Sensor, P.C.B. (LM)	8059-16-301	1
483	Gear (L) Assembly, Lift	8059-16-314	1
484	Gear, Lift	8000-22-14	1
485	Arm, Lift	8000-22-11	1
486	Spring, LP	8000-22-45	1
487	Lever, Lift	8059-16-67	1
488	Spring, Lift Lever	8059-16-68	1
489	E Ring S 2.5	9504-00-00	1
490	Screw, Sems, M2.6 ×7	9099-00-00	1
491	Sleeve, Guide	8000-22-24	1
498	Stay, Top	8000-22-65	1
499	Wire, End Sensor	8059-16-19	1
500	Angle, Rear	8059-16-09	1
501	Plate, Upper	8059-16-66	1
502	Shaft, Synchronize	8059-16-60	1
503	Gear (A), Synchronize	8059-16-17	2
504	E Ring S 2.5	9504-00-00	2
505	Screw, Sems, M2.6 ×4	9096-00-00	10
506	Screw (For Camera), M2.6×3	9556-00-00	2
507	Screw (For Camera), M2.3×2.5	9991-00-00	2
508	Screw, C-Tight, M2.6×5	9192-00-00	4
531	Plate, RG Slide	8059-17-03	1
532	Spring, RG Slide	8059-17-11	1
533	Collar, RG Slide Plate	8059-17-10	1
534	Screw, Sems, M2 ×4	9077-00-00	1
535	Base, RG Slide	8059-17-09	1

Ref No.	Description	MFR' Part No.	Q' ty
536	Arm Semi Assembly, RG	8059-17-502	1
537	Washer, Polyslider, φ2.6 ×φ6 ×t0.5	9884-00-00	1
538	Arm, RG Actuate	8059-17-01	1
539	Washer, Polyslider, φ2.1 ×φ5 ×t0.5	9876-00-00	1
540	RG Actuator	8059-17-02	1

22. ELECTRICAL PARTS LIST

PRINTED CIRCUITBOARD ASSEMBLY	MODEL NO. F1	MODEL NO. F2
MCV C. B. A.	0VSA03470	0VSA02660
(CONSISTS OF MCV-A ~E, SWV C. B. A.)		
MCV-A C. B. A.	0VSA03470-A	0VSA02660-A
MCV-B C. B. A.	0VSA03470-B	0VSA02660-B
MCV-C C. B. A.	0VSA03470-C	0VSA02660-C
MCV-D C. B. A.	0VSA03470-D	0VSA02660-D
MCV-E C. B. A.	0VSA03470-E	0VSA02660-E
SWV C. B. A.	0VSA02662	0VSA02662
PSV C. B. A.	0VSA03449	0VSA03449

MCV-A C. B. A.

REF. NO.	DESCRIPTION		PART NO.
C 51	CERAMIC CAP.	Y M 0. 01UF/16V	3Y4D103T
	CERAMIC CAP.	F Z 0. 01UF/16V	1220842T
C 52	ELECTROLYTIC CAP.	2. 2UF/50V M	126F225S
C 53	CERAMIC CAP.	F Z 0. 022UF/25V	122Z122T
	CERAMIC CAP.	F Z 0. 022UF/25V	1220843T
C 54	ELECTROLYTIC CAP.	47UF/6. 3V M	126A476S
C 55	CERAMIC CAP.	Y M 0. 01UF/16V	3Y4D103T
	CERAMIC CAP.	F Z 0. 01UF/16V	1220842T
C 56	CERAMIC CAP.	Y M 0. 01UF/16V	3Y4D103T
	CERAMIC CAP.	F Z 0. 01UF/16V	1220842T
C 57	SEMICONDUCTOR CAP.	SR K 0. 068UF/25V	12Y2683S
C 58	ELECTROLYTIC CAP.	10UF/16V M	126C106S
C 59	ELECTROLYTIC CAP.	1000UF/6. 3V M	126A108S
C 60	ELECTROLYTIC CAP.	330UF/16V M	126C337S
C 61	ELECTROLYTIC CAP.	4. 7UF/25V M	126D475S
C 62	CERAMIC CAP.	Y M 0. 01UF/16V	3Y4D103T
	CERAMIC CAP.	F Z 0. 01UF/16V	1220842T
C 63	ELECTROLYTIC CAP.	1UF/50V M	126F105
C 64	ELECTROLYTIC CAP.	0. 47UF/50V M	126F474S
C 65	CERAMIC CAP.	B J 82PF/50V	3B41820T
C 66	ELECTROLYTIC CAP.	0. 47UF/50V M	126F474S
C 67	CERAMIC CAP.	B J 150PF/50V	3B41151T
C 69	ELECTROLYTIC CAP.	2. 2UF/50V M	126F225S
C 70	ELECTROLYTIC CAP.	2. 2UF/50V M	126F225S
C 71	CERAMIC CAP.	B J 560PF/50V	3B41561T
C 72	CERAMIC CAP.	B J 390PF/50V	3B41391T
C 73	CERAMIC CAP.	SL J 22PF/50V	3S41220T
C 74	CERAMIC CAP.	B J 82PF/50V	3B41820T
C 75	CERAMIC CAP.	SL J 22PF/50V	3S41220T
C 76	ELECTROLYTIC CAP.	10UF/16V M	126C106S
C 77	CERAMIC CAP.	B J 220PF/50V	3B11221
	CERAMIC CAP.	B J 220PF/50V	3B11221
C 78	SEMICONDUCTOR CAP.	F Z 0. 1UF/25V	1220520S
C 81	CERAMIC CAP.	B J 180PF/50V	3B11181
C101	CERAMIC CAP.	Y M 0. 01UF/16V	3Y4D103T
	CERAMIC CAP.	F Z 0. 01UF/16V	1220842T
C102	CERAMIC CAP.	Y M 0. 01UF/16V	3Y4D103T
	CERAMIC CAP.	F Z 0. 01UF/16V	1220842T

REF. NO.	DESCRIPTION		PART NO.
C103	ELECTROLYTIC CAP.	47UF/6.3V M	126A476S
C104	CERAMIC CAP.	F Z 0.022UF/25V	122Z122T
	CERAMIC CAP.	F Z 0.022UF/25V	1220843T
C105	CERAMIC CAP.	Y M 0.01UF/16V	3Y4D103T
	CERAMIC CAP.	F Z 0.01UF/16V	1220842T
C106	CERAMIC CAP.	B J 100PF/50V	3B41101T
C107	CERAMIC CAP.	SL J 39PF/50V	3S41390T
C108	CERAMIC CAP.	Y M 0.01UF/16V	3Y4D103T
	CERAMIC CAP.	F Z 0.01UF/16V	1220842T
C110	CERAMIC CAP.	F Z 0.047UF/12V	32F1473S
C111	CERAMIC CAP.	F Z 0.022UF/25V	122Z122T
	CERAMIC CAP.	F Z 0.022UF/25V	1220843T
C112	ELECTROLYTIC CAP.	1UF/50V M	126F105S
C113	ELECTROLYTIC CAP.	1UF/50V M	126F105S
C114	CERAMIC CAP.	F Z 0.022UF/25V	122Z122T
	CERAMIC CAP.	F Z 0.022UF/25V	1220843T
C115	CERAMIC CAP.	B J 82PF/50V	3B41820T
C118	CERAMIC CAP.	F Z 0.022UF/25V	122Z122T
	CERAMIC CAP.	F Z 0.022UF/25V	1220843T
C119	ELECTROLYTIC CAP.	1UF/50V M	126F105S
C120	CERAMIC CAP.	Y M 0.01UF/16V	3Y4D103T
	CERAMIC CAP.	F Z 0.01UF/16V	1220842T
C121	SEMICONDUCTOR CAP.	SR K 0.047UF/25V	12Y2473S
C122	CERAMIC CAP.	Y M 0.01UF/16V	3Y4D103T
	CERAMIC CAP.	F Z 0.01UF/16V	1220842T
C123	CERAMIC CAP.	Y M 0.01UF/16V	3Y4D103T
	CERAMIC CAP.	F Z 0.01UF/16V	1220842T
C124	CERAMIC CAP.	Y M 0.01UF/16V	3Y4D103T
	CERAMIC CAP.	F Z 0.01UF/16V	1220842T
C125	CERAMIC CAP.	Y M 0.01UF/16V	3Y4D103T
	CERAMIC CAP.	F Z 0.01UF/16V	1220842T
C126	CERAMIC CAP.	Y M 0.01UF/16V	3Y4D103T
	CERAMIC CAP.	F Z 0.01UF/16V	1220842T
C127	CERAMIC CAP.	B J 220PF/50V	3B41221T
C128	CERAMIC CAP.	Y M 0.01UF/16V	3Y4D103T
	CERAMIC CAP.	F Z 0.01UF/16V	1220842T
C129	CERAMIC CAP.	Y M 0.01UF/16V	3Y4D103T
	CERAMIC CAP.	F Z 0.01UF/16V	1220842T
C141	CERAMIC CAP.	Y M 0.01UF/16V	3Y4D103T
	CERAMIC CAP.	F Z 0.01UF/16V	1220842T
C142	CERAMIC CAP.	Y M 0.01UF/16V	3Y4D103T
	CERAMIC CAP.	F Z 0.01UF/16V	1220842T
C143	CERAMIC CAP.	Y M 0.01UF/16V	3Y4D103T
	CERAMIC CAP.	F Z 0.01UF/16V	1220842T
C144	CERAMIC CAP.	Y M 0.01UF/16V	3Y4D103T
	CERAMIC CAP.	F Z 0.01UF/16V	1220842T
C314	ELECTROLYTIC CAP.	10UF/16V M	126C106S
C401	SEMICONDUCTOR CAP.	SR K 0.047UF/25V	12Y2473S
C402	ELECTROLYTIC CAP.	100UF/6.3V M	126A107S
C403	SEMICONDUCTOR CAP.	SR K 0.047UF/25V	12Y2473S
C404	ELECTROLYTIC CAP.	0.22UF/50V M	126F224S
C411	MYLAR CAP.	0.033UF/50V J	1254333S
C412	CERAMIC CAP.	F Z 0.047UF/12V	32F1473S
C413	ELECTROLYTIC CAP.	47UF/6.3V M	126A476S
C415	ELECTROLYTIC CAP.	8.2UF/16V M	126C825S
C416	ELECTROLYTIC CAP.	2.2UF/50V M NP	126X225S

REF. NO.	DESCRIPTION		PART NO.
C417	ELECTROLYTIC CAP.	10UF/16V M	126C106S
C418	ELECTROLYTIC CAP.	10UF/16V M	126C106S
C419	CERAMIC CAP.	F Z 0.047UF/12V	32F1473S
C420	SEMICONDUCTOR CAP.	SR K 0.047UF/25V	12Y2473S
C421	CERAMIC CAP.	F Z 0.022UF/25V	122Z122T
	CERAMIC CAP.	F Z 0.022UF/25V	1220843T
C424	ELECTROLYTIC CAP.	1UF/50V M	126F105S
C425	SEMICONDUCTOR CAP.	SR K 0.047UF/25V	12Y2473S
C426	MYLAR CAP.	0.18UF/50V J	1254184S
C501	ELECTROLYTIC CAP.	100UF/16V M	126C107S
C502	ELECTROLYTIC CAP.	47UF/6.3V M	126A476S
C504	ELECTROLYTIC CAP.	47UF/6.3V M	126A476S
C506	ELECTROLYTIC CAP.	100UF/16V M	126C107S
C507	SEMICONDUCTOR CAP.	F Z 0.1UF/25V	1220520S
C508	SEMICONDUCTOR CAP.	F Z 0.1UF/25V	1220520S
C511	CERAMIC CAP.	Y M 0.01UF/16V	3Y4D103T
	CERAMIC CAP.	F Z 0.01UF/16V	1220842T
CL-1	CONNECTOR ASS'Y	JP150/2500	0VE400280
CL-2	JUMPER WIRE, 6P	AWG26#2468/P2.0/160	WX1K2590-002
CL-3	JUMPER WIRE, 10P	AWG26#2468/P2.0/140	WX1K2590-003
CL-4	JUMPER WIRE, 9P	AWG26#2468/P2.0/180	WX1K2590-004
CL-5	JUMPER WIRE, 6P	AWG26#2468/P2.0/90	5750483
CL-7	JUMPER WIRE, 8P	AWG26#2468/P2.0/120	5750433
CL-8	JUMPER WIRE, 11P	AWG26#2468/P2.0/120	WX1K2590-001
CONV-1	(*1) RF CONVERTOR	MDLK5D053A	1813266
	(*1) RF CONVERTOR	MCB9-VG3404	1813275
	(*1) RF CONVERTOR	MDF33-VE3404	1813288
	(*2) RF CONVERTOR	MDF33-UD3620	1813289
	(*2) RF CONVERTOR	MDLK6E063A	1813309
D403	DIODE	1SS254	A1SS254T77**
	DIODE	US1040M	US1040MT
	DIODE	GMB01B	GMB01BT
D404	DIODE	1SS254	A1SS254T77**
	DIODE	US1040M	US1040MT
	DIODE	GMB01B	GMB01BT
D504	DIODE	1SS254	A1SS254T77**
	DIODE	US1040M	US1040MT
	DIODE	GMB01B	GMB01BT
D505	DIODE	1SS254	A1SS254T77**
	DIODE	US1040M	US1040MT
	DIODE	GMB01B	GMB01BT
DL101	COMB FILTER	4.433619MHZ	1813274
	COMB FILTER	4.433619MHZ	1812112
	COMB FILTER	4.433619MHZ	1813193
DL102	COMB FILTER	ADL-FN1344F	1813025
IC 51	IC	LA7326	14LQ487
IC 52	IC	LC8992	14LQ489
	IC	MSM7401RS	GMSM7401RS**
IC101	IC	LA7331N	14LQ488
IC401	IC, SERVO	MN6748FVAP-1	14DN363
IC402	IC	BA728	BA728
IC501	IC, SYSCON	MN15542FVBG	14DN486
IC502	IC	BA10393N	14LF519
IC503	IC, RESET	PST529D-2	14DM763
IC505	IC, MOTOR DRIVER	BA6209N	14LF492

NOTE: (*1)=MODEL NO. F1 (*2)=MODEL NO. F2

REF. NO.		DESCRIPTION		PART NO.
JK1		RCA JACK(WHITE)	JPJ2023-01-0300	1780078
JK2		RCA JACK(YELLOW)	JPJ2023-01-0400	1780079
L 51		INDUCTOR	68UH-K-26T	LLAXKATTU680
		INDUCTOR	68UH-K-26T	LLAXKDTKA680
L 52		INDUCTOR	68UH-K-26T	LLAXKATTU680
		INDUCTOR	68UH-K-26T	LLAXKDTKA680
L101		INDUCTOR	3.3UH-K-26T	LLAXKATTU3R3
		INDUCTOR	3.3UH-K-26T	LLAXKDTKA3R3
L102		INDUCTOR	18UH-K-26T	LLAXKATTU180
		INDUCTOR	18UH-K-26T	LLAXKDTKA180
L103		INDUCTOR	100UH-K-26T	LLAXKATTU101
		INDUCTOR	100UH-K-26T	LLAXKDTKA101
L105		INDUCTOR	15UH-K-26T	LLAXKATTU150
		INDUCTOR	15UH-K-26T	LLAXKDTKA150
M 1	(*1)	JACK BOARD	K2500	0VM300025
	(*2)	JACK BOARD	K2500/P/B-DI	0VM300103
Q 51		TRANSISTOR	2SA1317(S)	A1317SZ
		TRANSISTOR	2SA1317(T)	A1317TZ
Q 52		TRANSISTOR	2SA933(Q)	A933QZ
		TRANSISTOR	2SA933(R)	A933RZ
		TRANSISTOR	2SA608SP(E)	A608EZ
		TRANSISTOR	2SA608SP(F)	A608FZ
Q 53		TRANSISTOR	2SC2058(P)	C2058PZ
		TRANSISTOR	2SC2058(Q)	C2058QZ
		TRANSISTOR	2SC2839(E)	C2839EZ
		TRANSISTOR	2SC2839(F)	C2839FZ
Q 54		TRANSISTOR	2SC1740(Q)	C1740QZ
		TRANSISTOR	2SC1740(R)	C1740RZ
		TRANSISTOR	2SC536SP(E)	C536SEZ
		TRANSISTOR	2SC536SP(F)	C536SFZ
Q 55		TRANSISTOR	2SA933(Q)	A933QZ
		TRANSISTOR	2SA933(R)	A933RZ
		TRANSISTOR	2SA608SP(E)	A608EZ
		TRANSISTOR	2SA608SP(F)	A608FZ
Q 56		TRANSISTOR	2SC1740(Q)	C1740QZ
		TRANSISTOR	2SC1740(R)	C1740RZ
		TRANSISTOR	2SC536SP(E)	C536SEZ
		TRANSISTOR	2SC536SP(F)	C536SFZ
Q 57		TRANSISTOR	2SC1740(Q)	C1740QZ
		TRANSISTOR	2SC1740(R)	C1740RZ
		TRANSISTOR	2SC536SP(E)	C536SEZ
		TRANSISTOR	2SC536SP(F)	C536SFZ
Q101		TRANSISTOR	2SC1740(Q)	C1740QZ
		TRANSISTOR	2SC1740(R)	C1740RZ
		TRANSISTOR	2SC536SP(E)	C536SEZ
		TRANSISTOR	2SC536SP(F)	C536SFZ
Q103		TRANSISTOR	2SC1740(Q)	C1740QZ
		TRANSISTOR	2SC1740(R)	C1740RZ
		TRANSISTOR	2SC536SP(E)	C536SEZ
		TRANSISTOR	2SC536SP(F)	C536SFZ
Q104		TRANSISTOR	2SC1740(Q)	C1740QZ
		TRANSISTOR	2SC1740(R)	C1740RZ
		TRANSISTOR	2SC536SP(E)	C536SEZ
		TRANSISTOR	2SC536SP(F)	C536SFZ

NOTE:(*1)=MODEL NO. F1 (*2)=MODEL NO. F2

REF. NO.	DESCRIPTION		PART NO.
Q105	TRANSISTOR	2SC2058(P)	C2058PZ
	TRANSISTOR	2SC2058(Q)	C2058QZ
	TRANSISTOR	2SC2839(E)	C2839EZ
	TRANSISTOR	2SC2839(F)	C2839FZ
Q141	TRANSISTOR	2SC1740(Q)	C1740QZ
	TRANSISTOR	2SC1740(R)	C1740RZ
	TRANSISTOR	2SC536SP(E)	C536SEZ
	TRANSISTOR	2SC536SP(F)	C536SFZ
Q142	TRANSISTOR	2SC1740(Q)	C1740QZ
	TRANSISTOR	2SC1740(R)	C1740RZ
	TRANSISTOR	2SC536SP(E)	C536SEZ
	TRANSISTOR	2SC536SP(F)	C536SFZ
Q401	TRANSISTOR	2SA933(Q)	A933QZ
	TRANSISTOR	2SA933(R)	A933RZ
	TRANSISTOR	2SA608SP(E)	A608EZ
	TRANSISTOR	2SA608SP(F)	A608FZ
Q402	TRANSISTOR	2SC1740(Q)	C1740QZ
	TRANSISTOR	2SC1740(R)	C1740RZ
	TRANSISTOR	2SC536SP(E)	C536SEZ
	TRANSISTOR	2SC536SP(F)	C536SFZ
Q501	TRANSISTOR	2SD1384(Q)	D1384QZ
	TRANSISTOR	2SD1384(R)	D1384RZ
	TRANSISTOR	2SD1207(S)	D1207SZ
	TRANSISTOR	2SD1207(T)	D1207TZ
Q502	TRANSISTOR	2SB1010(Q)	B1010QZ
	TRANSISTOR	2SB1010(R)	B1010RZ
	TRANSISTOR	2SB892(S)	B892SZ
	TRANSISTOR	2SB892(T)	B892TZ
Q503	TRANSISTOR	2SC1740(Q)	C1740QZ
	TRANSISTOR	2SC1740(R)	C1740RZ
	TRANSISTOR	2SC536SP(E)	C536SEZ
	TRANSISTOR	2SC536SP(F)	C536SFZ
QR 51	RES. BUILT-IN TRANSISTOR	DTA124ES	A124ESZ
	RES. BUILT-IN TRANSISTOR	2SA1346	A1346Z
QR 52	RES. BUILT-IN TRANSISTOR	DTC124ES	C124ESZ
	RES. BUILT-IN TRANSISTOR	2SC3400	C3400Z
QR401	RES. BUILT-IN TRANSISTOR	DTC124ES	C124ESZ
	RES. BUILT-IN TRANSISTOR	2SC3400	C3400Z
QR501	RES. BUILT-IN TRANSISTOR	DTC124ES	C124ESZ
	RES. BUILT-IN TRANSISTOR	2SC3400	C3400Z
QR502	RES. BUILT-IN TRANSISTOR	DTA124ES	A124ESZ
	RES. BUILT-IN TRANSISTOR	2SA1346	A1346Z
R 51	CARBON RES.	1/5W J 1K OHM	1324102T
	CARBON RES.	1/6W J 1K OHM	132A102T
R 52	CARBON RES.	1/5W J 470K OHM	1324474T
	CARBON RES.	1/6W J 470K OHM	132A474T
R 54	CARBON RES.	1/5W J 560 OHM	1324561T
	CARBON RES.	1/6W J 560 OHM	132A561T
R 55	CARBON RES.	1/5W J 1.2K OHM	1324122T
	CARBON RES.	1/6W J 1.2K OHM	132A122T
R 56	CARBON RES.	1/5W J 33K OHM	1324333T
	CARBON RES.	1/6W J 33K OHM	132A333T
R 57	CARBON RES.	1/5W J 47K OHM	1324473T
	CARBON RES.	1/6W J 47K OHM	132A473T
R 58	CARBON RES.	1/5W J 4.7K OHM	1324472T
	CARBON RES.	1/6W J 4.7K OHM	132A472T

REF. NO.	DESCRIPTION		PART NO.
R 59	CARBON RES.	1/5W J 150 OHM	1324151T
	CARBON RES.	1/6W J 150 OHM	132A151T
R 60	CARBON RES.	1/5W J 120 OHM	1324121T
	CARBON RES.	1/6W J 120 OHM	132A121T
R 61	CARBON RES.	1/5W J 68 OHM	1324680T
	CARBON RES.	1/6W J 68 OHM	132A680T
R 62 ⚠	METAL RES.	1W J 330 OHM	1330419
	METAL RES.	1W J 330 OHM	1330363
R 63	CARBON RES.	1/5W J 4.7K OHM	1324472T
	CARBON RES.	1/6W J 4.7K OHM	132A472T
R 65	CARBON RES.	1/5W J 1M OHM	1324105T
	CARBON RES.	1/6W J 1M OHM	132A105T
R 66	CARBON RES.	1/5W J 1M OHM	1324105T
	CARBON RES.	1/6W J 1M OHM	132A105T
R 67	CARBON RES.	1/5W J 2.2K OHM	1324222T
	CARBON RES.	1/6W J 2.2K OHM	132A222T
R 68	CARBON RES.	1/5W J 330 OHM	1324331T
	CARBON RES.	1/6W J 330 OHM	132A331T
R 69	CARBON RES.	1/5W J 1K OHM	1324102T
	CARBON RES.	1/6W J 1K OHM	132A102T
R 70	CARBON RES.	1/5W J 1K OHM	1324102T
	CARBON RES.	1/6W J 1K OHM	132A102T
R 71	CARBON RES.	1/5W J 1K OHM	1324102T
	CARBON RES.	1/6W J 1K OHM	132A102T
R 72	CARBON RES.	1/5W J 2.2K OHM	1324222T
	CARBON RES.	1/6W J 2.2K OHM	132A222T
R 73	CARBON RES.	1/5W J 1K OHM	1324102T
	CARBON RES.	1/6W J 1K OHM	132A102T
R 74	CARBON RES.	1/5W J 470 OHM	1324471T
	CARBON RES.	1/6W J 470 OHM	132A471T
R 75	CARBON RES.	1/5W J 910 OHM	1324911T
	CARBON RES.	1/6W J 910 OHM	132A911T
R 76	CARBON RES.	1/5W J 220 OHM	1324221T
	CARBON RES.	1/6W J 220 OHM	132A221T
R 77	CARBON RES.	1/5W J 2.2K OHM	1324222T
	CARBON RES.	1/6W J 2.2K OHM	132A222T
R 81	CARBON RES.	1/5W J 1K OHM	1324102
	CARBON RES.	1/6W J 1K OHM	132A102
R101	CARBON RES.	1/5W J 3.3K OHM	1324332T
	CARBON RES.	1/6W J 3.3K OHM	132A332T
R102	CARBON RES.	1/5W J 100K OHM	1324104T
	CARBON RES.	1/6W J 100K OHM	132A104T
R103	CARBON RES.	1/5W J 4.7K OHM	1324472T
	CARBON RES.	1/6W J 4.7K OHM	132A472T
R104	CARBON RES.	1/5W J 6.8K OHM	1324682T
	CARBON RES.	1/6W J 6.8K OHM	132A682T
R105	CARBON RES.	1/5W J 22K OHM	1324223T
	CARBON RES.	1/6W J 22K OHM	132A223T
R106	CARBON RES.	1/5W J 1.2K OHM	1324122T
	CARBON RES.	1/6W J 1.2K OHM	132A122T
R109	CARBON RES.	1/5W J 1K OHM	1324102T
	CARBON RES.	1/6W J 1K OHM	132A102T
R110	CARBON RES.	1/5W J 680 OHM	1324681T
	CARBON RES.	1/6W J 680 OHM	132A681T
R111	CARBON RES.	1/5W J 3.3K OHM	1324332T
	CARBON RES.	1/6W J 3.3K OHM	132A332T

REF. NO.	DESCRIPTION		PART NO.
R112	CARBON RES.	1/5W J 1K OHM	1324102T
	CARBON RES.	1/6W J 1K OHM	132A102T
R113	CARBON RES.	1/5W J 100K OHM	1324104T
	CARBON RES.	1/6W J 100K OHM	132A104T
R114	CARBON RES.	1/5W J 2.2K OHM	1324222T
	CARBON RES.	1/6W J 2.2K OHM	132A222T
R115	CARBON RES.	1/5W J 2.2K OHM	1324222T
	CARBON RES.	1/6W J 2.2K OHM	132A222T
R116	CARBON RES.	1/5W J 100K OHM	1324104T
	CARBON RES.	1/6W J 100K OHM	132A104T
R117	CARBON RES.	1/5W J 470 OHM	1324471T
	CARBON RES.	1/6W J 470 OHM	132A471T
R119	CARBON RES.	1/5W J 1K OHM	1324102T
	CARBON RES.	1/6W J 1K OHM	132A102T
R121	CARBON RES.	1/5W J 5.6K OHM	1324562T
	CARBON RES.	1/6W J 5.6K OHM	132A562T
R122	CARBON RES.	1/5W J 4.7K OHM	1324472T
	CARBON RES.	1/6W J 4.7K OHM	132A472T
R123	CARBON RES.	1/5W J 1K OHM	1324102T
	CARBON RES.	1/6W J 1K OHM	132A102T
R124	CARBON RES.	1/5W J 120 OHM	1324121T
	CARBON RES.	1/6W J 120 OHM	132A121T
R125	CARBON RES.	1/5W J 560 OHM	1324561T
	CARBON RES.	1/6W J 560 OHM	132A561T
R126	CARBON RES.	1/5W J 22K OHM	1324223T
	CARBON RES.	1/6W J 22K OHM	132A223T
R127	CARBON RES.	1/5W J 270 OHM	1324271T
	CARBON RES.	1/6W J 270 OHM	132A271T
R128	CARBON RES.	1/5W J 560 OHM	1324561T
	CARBON RES.	1/6W J 560 OHM	132A561T
R141	CARBON RES.	1/5W J 3.9K OHM	1324392T
	CARBON RES.	1/6W J 3.9K OHM	132A392T
R142	CARBON RES.	1/5W J 2.2K OHM	1324222T
	CARBON RES.	1/6W J 2.2K OHM	132A222T
R143	CARBON RES.	1/5W J 270 OHM	1324271T
	CARBON RES.	1/6W J 270 OHM	132A271T
R144	CARBON RES.	1/5W J 1K OHM	1324102T
	CARBON RES.	1/6W J 1K OHM	132A102T
R145	CARBON RES.	1/5W J 33K OHM	1324333T
	CARBON RES.	1/6W J 33K OHM	132A333T
R146	CARBON RES.	1/5W J 1.2K OHM	1324122T
	CARBON RES.	1/6W J 1.2K OHM	132A122T
R402	CARBON RES.	1/5W J 47K OHM	1324473T
	CARBON RES.	1/6W J 47K OHM	132A473T
R403	CARBON RES.	1/5W J 56K OHM	1324563T
	CARBON RES.	1/6W J 56K OHM	132A563T
R404	CARBON RES.	1/5W J 56K OHM	1324563T
	CARBON RES.	1/6W J 56K OHM	132A563T
R405	CARBON RES.	1/5W J 1K OHM	1324102T
	CARBON RES.	1/6W J 1K OHM	132A102T
R406	CARBON RES.	1/5W J 4.7K OHM	1324472T
	CARBON RES.	1/6W J 4.7K OHM	132A472T
R407	CARBON RES.	1/5W J 47K OHM	1324473T
	CARBON RES.	1/6W J 47K OHM	132A473T
R408	CARBON RES.	1/5W J 22K OHM	1324223T
	CARBON RES.	1/6W J 22K OHM	132A223T

REF. NO.	DESCRIPTION		PART NO.
R409	CARBON RES.	1/5W J 47K OHM	1324473T
	CARBON RES.	1/6W J 47K OHM	132A473T
R410	CARBON RES.	1/5W J 47K OHM	1324473T
	CARBON RES.	1/6W J 47K OHM	132A473T
R411	CARBON RES.	1/5W J 150K OHM	1324154T
	CARBON RES.	1/6W J 150K OHM	132A154T
R412	CARBON RES.	1/5W J 39K OHM	1324393T
	CARBON RES.	1/6W J 39K OHM	132A393T
R413	CARBON RES.	1/5W J 10K OHM	1324103T
	CARBON RES.	1/6W J 10K OHM	132A103T
R414	CARBON RES.	1/5W J 8.2K OHM	1324822T
	CARBON RES.	1/6W J 8.2K OHM	132A822T
R421	CARBON RES.	1/5W J 3.9K OHM	1324392T
	CARBON RES.	1/6W J 3.9K OHM	132A392T
R422	CARBON RES.	1/5W J 15K OHM	1324153T
	CARBON RES.	1/6W J 15K OHM	132A153T
R425	CARBON RES.	1/5W J 4.7K OHM	1324472T
	CARBON RES.	1/6W J 4.7K OHM	132A472T
R426	CARBON RES.	1/5W J 22K OHM	1324223T
	CARBON RES.	1/6W J 22K OHM	132A223T
R436	CARBON RES.	1/5W J 33K OHM	1324333T
	CARBON RES.	1/6W J 33K OHM	132A333T
R438	CARBON RES.	1/5W J 100 OHM	1324101T
	CARBON RES.	1/6W J 100 OHM	132A101T
R439	CARBON RES.	1/5W G 10K OHM	1354103T
R440	CARBON RES.	1/5W G 10K OHM	1354103T
R441	CARBON RES.	1/5W J 2.2K OHM	1324222T
	CARBON RES.	1/6W J 2.2K OHM	132A222T
R442	CARBON RES.	1/5W J 1K OHM	1324102T
	CARBON RES.	1/6W J 1K OHM	132A102T
R443	CARBON RES.	1/5W J 4.7K OHM	1324472T
	CARBON RES.	1/6W J 4.7K OHM	132A472T
R444	CARBON RES.	1/5W J 39K OHM	1324393T
	CARBON RES.	1/6W J 39K OHM	132A393T
R445	CARBON RES.	1/5W J 39K OHM	1324393T
	CARBON RES.	1/6W J 39K OHM	132A393T
R447	CARBON RES.	1/5W J 4.7K OHM	1324472T
	CARBON RES.	1/6W J 4.7K OHM	132A472T
R448	CARBON RES.	1/5W J 150 OHM	1324151T
	CARBON RES.	1/6W J 150 OHM	132A151T
R449	CARBON RES.	1/5W J 22K OHM	1324223T
	CARBON RES.	1/6W J 22K OHM	132A223T
R501	CARBON RES.	1/5W J 1.2K OHM	1324122T
	CARBON RES.	1/6W J 1.2K OHM	132A122T
R502	CARBON RES.	1/5W J 100K OHM	1324104T
	CARBON RES.	1/6W J 100K OHM	132A104T
R503	CARBON RES.	1/5W J 1.2K OHM	1324122T
	CARBON RES.	1/6W J 1.2K OHM	132A122T
R504	CARBON RES.	1/5W J 100K OHM	1324104T
	CARBON RES.	1/6W J 100K OHM	132A104T
R505	CARBON RES.	1/5W J 10K OHM	1324103T
	CARBON RES.	1/6W J 10K OHM	132A103T
R506	CARBON RES.	1/5W J 10K OHM	1324103T
	CARBON RES.	1/6W J 10K OHM	132A103T
R507	CARBON RES.	1/5W J 470K OHM	1324474T
	CARBON RES.	1/6W J 470K OHM	132A474T

REF. NO.	DESCRIPTION		PART NO.
R508	CARBON RES.	1/5W J 470K OHM	1324474T
	CARBON RES.	1/6W J 470K OHM	132A474T
R509	CARBON RES.	1/5W J 10K OHM	1324103T
	CARBON RES.	1/6W J 10K OHM	132A103T
R510	CARBON RES.	1/5W J 47K OHM	1324473T
	CARBON RES.	1/6W J 47K OHM	132A473T
R528	CARBON RES.	1/5W J 6.8K OHM	1324682T
	CARBON RES.	1/6W J 6.8K OHM	132A682T
R529	CARBON RES.	1/5W J 6.8K OHM	1324682T
	CARBON RES.	1/6W J 6.8K OHM	132A682T
T 51	L.P.F. 3MHZ	LPF-U30-A	1810994
	L.P.F. 3MHZ	ELB-4M031N	1810805
	L.P.F.	3MHZ	1813270
T101	B.P.F.	5E-4296-01	1813269
TP 52	TEST PIN	RT-08T-1.3BT	1770482
TP 53	TEST PIN	RT-08T-1.3BT	1770482
TP 55	TEST PIN	RT-08T-1.3BT	1770482
TP301	TEST PIN	RT-08T-1.3BT	1770482
TP402	TEST PIN	RT-08T-1.3BT	1770482
VR 51	P.O.T.	1KOHM B	138J777
	P.O.T.	1KOHM B	138N777
VR 52	CARBON P.O.T.	1K OHM	238A390Y
	CARBON P.O.T.	1K OHM	238N489Y
	CARBON P.O.T.	1K OHM	238A419Y
VR401	CARBON P.O.T.	220K OHM	238A404Y
	CARBON P.O.T.	200K OHM	238N498Y
	CARBON P.O.T.	200K OHM	238A428Y
VR402	METAL P.O.T.	220K OHM	238A377Y
	METAL P.O.T.	200K OHM	238N531Y
	METAL P.O.T.	200K OHM	238A445Y
X101	X'TAL	4.433619MHZ	1811366
	X'TAL	4.433619MHZ	1811388
X501	CERAMIC RESONATOR	3.58MHZ	1812206
	CERAMIC RESONATOR	FCR3.58MC3T	1811368
	CERAMIC RESONATOR	3.58MHZ	1811211

MCV-B C.B.A.

C 1	CERAMIC CAP.	F Z 0.022UF/25V	122Z122T
	CERAMIC CAP.	F Z 0.022UF/25V	1220843T
C 2	CERAMIC CAP.	F Z 0.033UF/16V	122Z790T
	CERAMIC CAP.	F Z 0.033UF/12V	1220887T
C 3	CERAMIC CAP.	F Z 0.033UF/16V	122Z790T
	CERAMIC CAP.	F Z 0.033UF/12V	1220887T
C 4	CERAMIC CAP.	F Z 0.022UF/25V	122Z122T
	CERAMIC CAP.	F Z 0.022UF/25V	1220843T
C 5	ELECTROLYTIC CAP.	47UF/6.3V M H7	526R476S
C 6	CERAMIC CAP.	F Z 0.022UF/25V	122Z122T
	CERAMIC CAP.	F Z 0.022UF/25V	1220843T
C 7	CERAMIC CAP.	SL J 22PF/50V	3S41220T

REF. NO.	DESCRIPTION		PART NO.
C 8	CERAMIC CAP.	SL J 22PF/50V	3S41220T
C 9	CERAMIC CAP.	SL J 22PF/50V	3S41220T
C 10	CERAMIC CAP.	B J 470PF/50V	3B41471T
C 11	CERAMIC CAP.	SL J 22PF/50V	3S41220T
C 12	CERAMIC CAP.	SL J 33PF/50V	3S41330T
C 13	CERAMIC CAP.	F Z 0.022UF/25V	122Z122T
	CERAMIC CAP.	F Z 0.022UF/25V	1220843T
C301	SEMICONDUCTOR CAP.	SR K 0.001UF/25V	12Y2102S
C302	ELECTROLYTIC CAP.	10UF/16V M	126C106S
C303	ELECTROLYTIC CAP.	22UF/6.3V M	126A226S
C304	MYLAR CAP.	0.033UF/50V J	1254333S
C307	CERAMIC CAP.	B J 100PF/50V	3B41101T
C308	SEMICONDUCTOR CAP.	SR K 0.022UF/25V	12Y2223S
C309	ELECTROLYTIC CAP.	220UF/16V M	126C227S
C310	ELECTROLYTIC CAP.	2.2UF/50V M	126F225S
C312	ELECTROLYTIC CAP.	47UF/6.3V M	126A476S
C315	ELECTROLYTIC CAP.	4.7UF/25V M	126D475S
C422	ELECTROLYTIC CAP.	1UF/50V M	126F105S
C423	ELECTROLYTIC CAP.	1UF/50V M NP	126X105S
C503	SEMICONDUCTOR CAP.	F Z 0.1UF/25V	1220520S
C509	ELECTROLYTIC CAP.	1UF/50V M	126F105S
CL-6	JUMPER WIRE, 6P	AWG26#2468/P2.0/100	WX1K2500-001
CN-A	ANGLE SOCKET CONNECTOR,	11L-SDD-17S-S2L2-FM	1700762
CN-G	ANGLE SOCKET CONNECTOR,	IL-SDA- 6S-S2L2	1770601
D301	DIODE	1SS254	1SS254T
	DIODE	US1040M	US1040MT
	DIODE	GMB01B	GMB01BT
IC 1	IC	LA7320	14LQ486
IC301	IC	BA328LN	BA328LN
L 1	INDUCTOR	2.2UH-K-26T	LLAXKATTU2R2
L 2	INDUCTOR	18UH-K-26T	LLAXKATTU180
	INDUCTOR	18UH-K-26T	LLAXKDTKA180
L 3	INDUCTOR	68UH-K-26T	LLAXKATTU680
	INDUCTOR	68UH-K-26T	LLAXKDTKA680
L 4	INDUCTOR	22UH-K-26T	LLAXKATTU220
	INDUCTOR	22UH-K-26T	LLAXKDTKA220
L 5	INDUCTOR	150UH-K-26T	LLAXKATTU151
	INDUCTOR	150UH-K-26T	LLAXKDTKA151
L 6	INDUCTOR	33UH-K-26T	LLAXKATTU330
	INDUCTOR	33UH-K-26T	LLAXKDTKA330
L 7	INDUCTOR	100UH-K-26T	LLAXKATTU101
	INDUCTOR	100UH-K-26T	LLAXKDTKA101
M 2	SHIELD, BOTTOM P/B	K2500	QVM400068
M 3	PLATE, TOP SHIELD	VD7991	6S50372
Q 1	TRANSISTOR	2SC2058(P)	C2058PZ
	TRANSISTOR	2SC2058(Q)	C2058QZ
	TRANSISTOR	2SC2839(E)	C2839EZ
	TRANSISTOR	2SC2839(F)	C2839FZ
Q 2	TRANSISTOR	2SC2058(P)	C2058PZ
	TRANSISTOR	2SC2058(Q)	C2058QZ
	TRANSISTOR	2SC2839(E)	C2839EZ
	TRANSISTOR	2SC2839(F)	C2839FZ
Q 3	TRANSISTOR	2SC1740(Q)	C1740QZ
	TRANSISTOR	2SC1740(R)	C1740RZ
	TRANSISTOR	2SC536SP(E)	C536SEZ
	TRANSISTOR	2SC536SP(F)	C536SFZ

REF. NO.	DESCRIPTION		PART NO.
Q301	TRANSISTOR	2SD1468(S)	D1468SZ
	TRANSISTOR	2SD1468(R)	D1468RZ
	TRANSISTOR	2SD1012(F)	D1012FZ
	TRANSISTOR	2SD1012(G)	D1012GZ
Q504	TRANSISTOR	2SC1740(Q)	C1740QZ
	TRANSISTOR	2SC1740(R)	C1740RZ
	TRANSISTOR	2SC536SP(E)	C536SEZ
	TRANSISTOR	2SC536SP(F)	C536SFZ
Q505	TRANSISTOR	2SC1740(Q)	C1740QZ
	TRANSISTOR	2SC1740(R)	C1740RZ
	TRANSISTOR	2SC536SP(E)	C536SEZ
	TRANSISTOR	2SC536SP(F)	C536SFZ
R 1	CARBON RES.	1/5W J 2.2K OHM	1324222T
	CARBON RES.	1/6W J 2.2K OHM	132A222T
R 2	CARBON RES.	1/5W J 1.8K OHM	1324182T
	CARBON RES.	1/6W J 1.8K OHM	132A182T
R 3	CARBON RES.	1/5W J 390 OHM	1324391T
	CARBON RES.	1/6W J 390 OHM	132A391T
R 4	CARBON RES.	1/5W J 3.3K OHM	1324332T
	CARBON RES.	1/6W J 3.3K OHM	132A332T
R 5	CARBON RES.	1/5W J 390 OHM	1324391T
	CARBON RES.	1/6W J 390 OHM	132A391T
R 6	CARBON RES.	1/5W J 2.2K OHM	1324222T
	CARBON RES.	1/6W J 2.2K OHM	132A222T
R 7	CARBON RES.	1/5W J 560 OHM	1324561T
	CARBON RES.	1/6W J 560 OHM	132A561T
R 8	CARBON RES.	1/5W J 680 OHM	1324681T
	CARBON RES.	1/6W J 680 OHM	132A681T
R 9	CARBON RES.	1/5W J 330 OHM	1324331T
	CARBON RES.	1/6W J 330 OHM	132A331T
R 10	CARBON RES.	1/5W J 1K OHM	1324102T
	CARBON RES.	1/6W J 1K OHM	132A102T
R 11	CARBON RES.	1/5W J 3.9K OHM	1324392T
	CARBON RES.	1/6W J 3.9K OHM	132A392T
R301	CARBON RES.	1/5W J 47K OHM	1324473T
	CARBON RES.	1/6W J 47K OHM	132A473T
R302	CARBON RES.	1/5W J 100 OHM	1324101T
	CARBON RES.	1/6W J 100 OHM	132A101T
R303	CARBON RES.	1/5W J 120 OHM	1324121T
	CARBON RES.	1/6W J 120 OHM	132A121T
R304	CARBON RES.	1/5W J 100K OHM	1324104T
	CARBON RES.	1/6W J 100K OHM	132A104T
R305	CARBON RES.	1/5W J 3.9K OHM	1324392T
	CARBON RES.	1/6W J 3.9K OHM	132A392T
R307	CARBON RES.	1/5W J 120K OHM	1324124T
	CARBON RES.	1/6W J 120K OHM	132A124T
R308	CARBON RES.	1/5W J 1K OHM	1324102T
	CARBON RES.	1/6W J 1K OHM	132A102T
R309	CARBON RES.	1/5W J 220 OHM	1324221T
	CARBON RES.	1/6W J 220 OHM	132A221T
R311	CARBON RES.	1/5W J 33K OHM	1324333T
	CARBON RES.	1/6W J 33K OHM	132A333T
R312	CARBON RES.	1/5W J 5.6K OHM	1324562T
	CARBON RES.	1/6W J 5.6K OHM	132A562T
R313	CARBON RES.	1/5W J 100K OHM	1324104T
	CARBON RES.	1/6W J 100K OHM	132A104T

REF. NO.	DESCRIPTION		PART NO.
R314	CARBON RES.	1/5W J 3.3K OHM	1324332T
	CARBON RES.	1/6W J 3.3K OHM	132A332T
R315	CARBON RES.	1/5W J 5.6K OHM	1324562T
	CARBON RES.	1/6W J 5.6K OHM	132A562T
R520	CARBON RES.	1/5W J 47K OHM	1324473T
	CARBON RES.	1/6W J 47K OHM	132A473T
R521	CARBON RES.	1/5W J 470K OHM	1324474T
	CARBON RES.	1/6W J 470K OHM	132A474T
R522	CARBON RES.	1/5W J 2.2K OHM	1324222T
	CARBON RES.	1/6W J 2.2K OHM	132A222T
R523	CARBON RES.	1/5W J 47K OHM	1324473T
	CARBON RES.	1/6W J 47K OHM	132A473T
R524	CARBON RES.	1/5W J 4.7K OHM	1324472T
	CARBON RES.	1/6W J 4.7K OHM	132A472T
R525	CARBON RES.	1/5W J 1.2K OHM	1324122T
	CARBON RES.	1/6W J 1.2K OHM	132A122T
R526	CARBON RES.	1/5W J 82K OHM	1324823T
	CARBON RES.	1/6W J 82K OHM	132A823T
R530	CARBON RES.	1/5W J 180 OHM	1324181T
	CARBON RES.	1/6W J 180 OHM	132A181T
TP 1	TEST PIN	RT-08T-1.3BT	1770482
TP 2	TEST PIN	RT-08T-1.3BT	1770482

MCV-C C.B.A.

C701	ELECTROLYTIC CAP.	47UF/6.3V M	126A476S
C702	ELECTROLYTIC CAP.	10UF/16V M	126C106S
C703	ELECTROLYTIC CAP.	100UF/16V M	126C107S
D701	DIODE	1SS254	A1SS254T77**
	DIODE	US1040M	US1040MT
	DIODE	GMB01B	GMB01BT
D702	DIODE	1SS254	A1SS254T77**
	DIODE	US1040M	US1040MT
	DIODE	GMB01B	GMB01BT
D703	DIODE	1SS254	A1SS254T77**
	DIODE	US1040M	US1040MT
	DIODE	GMB01B	GMB01BT
D704	DIODE	1SS254	A1SS254T77**
	DIODE	US1040M	US1040MT
	DIODE	GMB01B	GMB01BT
D705	DIODE	1SS254	A1SS254T77**
	DIODE	US1040M	US1040MT
	DIODE	GMB01B	GMB01BT
D706	DIODE	1SS254	A1SS254T77**
	DIODE	US1040M	US1040MT
	DIODE	GMB01B	GMB01BT
D707	DIODE	1SS254	A1SS254T77**
	DIODE	US1040M	US1040MT
	DIODE	GMB01B	GMB01BT
D708	LED	SLR-34DU5F AMBER	1401438

REF. NO.	DESCRIPTION		PART NO.
D709	LED	SLR-34MG5 GREEN	1401231
D710	LED	SLR-34DU5F AMBER	1401438
D711	LED	SLR-34VR5 RED	1401230
D713	LED	SLR-34MG5 GREEN	1401231
D714	LED	SLR-34MG5 GREEN	1401231
D715	LED	SLR-34MG5 GREEN	1401231
D716	LED	SLR-34MG5 GREEN	1401231
D717	LED	SLR-34MG5 GREEN	1401231
D718	LED	SLR-34VR5 RED	1401230
D719	LED	SLR-34VR5 RED	1401230
D720	LED	SLR-34VR5 RED	1401230
IC701	IC	LB1408	14LQ520
M 4	HOLDER, LED(LEVEL)	VD30412	6D52258
M 5	HOLDER, L.E.D.	K2590ZA	0VM300426
QR701	RES. BUILT-IN TRANSISTOR	DTA124ES	A124ESZ
	RES. BUILT-IN TRANSISTOR	2SA1346	A1346Z
QR702	RES. BUILT-IN TRANSISTOR	DTA124ES	A124ESZ
	RES. BUILT-IN TRANSISTOR	2SA1346	A1346Z
QR703	RES. BUILT-IN TRANSISTOR	DTA124ES	A124ESZ
	RES. BUILT-IN TRANSISTOR	2SA1346	A1346Z
QR704	RES. BUILT-IN TRANSISTOR	DTA124ES	A124ESZ
	RES. BUILT-IN TRANSISTOR	2SA1346	A1346Z
R701	CARBON RES.	1/5W J 10K OHM	1324103T
	CARBON RES.	1/6W J 10K OHM	132A103T
R702	CARBON RES.	1/5W J 100 OHM	1324101T
	CARBON RES.	1/6W J 100 OHM	132A101T
R703	CARBON RES.	1/5W J 680 OHM	1324681T
	CARBON RES.	1/6W J 680 OHM	132A681T
R704	CARBON RES.	1/5W J 680 OHM	1324681T
	CARBON RES.	1/6W J 680 OHM	132A681T
R705	CARBON RES.	1/5W J 680 OHM	1324681T
	CARBON RES.	1/6W J 680 OHM	132A681T
R706	CARBON RES.	1/5W J 1K OHM	1324102T
	CARBON RES.	1/6W J 1K OHM	132A102T
R708	CARBON RES.	1/5W J 3.3K OHM	1324332T
	CARBON RES.	1/6W J 3.3K OHM	132A332T
R709	CARBON RES.	1/5W J 1K OHM	1324102T
	CARBON RES.	1/6W J 1K OHM	132A102T
R711	CARBON RES.	1/5W J 7.5K OHM	1324752T
	CARBON RES.	1/6W J 7.5K OHM	132A752T
R712	CARBON RES.	1/5W J 2.2K OHM	1324222T
	CARBON RES.	1/6W J 2.2K OHM	132A222T
RS701	REMOTE SENSOR UNIT	SFN-R0011	1812501
SW701	PUSH SWITCH	EVQ2150SR	5622158Y
	PUSH SWITCH	SKHVBE KHV-902	5622160Y
	PUSH SWITCH	R66-441Q	5622161
SW702	PUSH SWITCH	EVQ2150SR	5622158Y
	PUSH SWITCH	SKHVBE KHV-902	5622160Y
	PUSH SWITCH	R66-441Q	5622161
SW703	PUSH SWITCH	EVQ2150SR	5622158Y
	PUSH SWITCH	SKHVBE KHV-902	5622160Y
	PUSH SWITCH	R66-441Q	5622161
SW704	PUSH SWITCH	EVQ2150SR	5622158Y
	PUSH SWITCH	SKHVBE KHV-902	5622160Y
	PUSH SWITCH	R66-441Q	5622161

REF. NO.	DESCRIPTION		PART NO.
SW705	PUSH SWITCH	EVQ2150SR	5622158Y
	PUSH SWITCH	SKHVBE KHV-902	5622160Y
	PUSH SWITCH	R66-441Q	5622161
SW706	PUSH SWITCH	EVQ2150SR	5622158Y
	PUSH SWITCH	SKHVBE KHV-902	5622160Y
	PUSH SWITCH	R66-441Q	5622161
SW707	SLIDE SWITCH	1C-2P	1621664
SW708	SLIDE SWITCH	1C-2P	1621664
VR701	VOLUME	250KOHM B	539A860
	VOLUME	250KOHM B	539N852
VR702	VOLUME	20KOHM B	539A848
	VOLUME	20KOHM B	539N851

MCV-D C. B. A.

CN-C	ANGLE SOCKET CONNECTOR,	IL-SDA- 9S-S2L2	1770604

MCV-E C. B. A.

CN-D	ANGLE PIN CONNECTOR,	6P IL-SDA- 6P-S2L2	1770617

SWV C. B. A.

C241	ELECTROLYTIC CAP.	470UF/6. 3V M	126A477S
C242	CERAMIC CAP.	Y M 0. 01UF/16V	3Y4D103T
	CERAMIC CAP.	F Z 0. 01UF/16V	1220842T
C243	MYLAR CAP.	0. 001UF/50V J	1254102S
C244	CERAMIC CAP.	Y M 0. 01UF/16V	3Y4D103T
	CERAMIC CAP.	F Z 0. 01UF/16V	1220842T
C245	ELECTROLYTIC CAP.	3. 3UF/50V M	126F335S
C246	MYLAR CAP.	0. 0033UF/50V J	1254332S
C247	MYLAR CAP.	0. 0022UF/50V J	1254222S
C248	CERAMIC CAP.	Y M 0. 01UF/16V	3Y4D103T
	CERAMIC CAP.	F Z 0. 01UF/16V	1220842T
C249	CERAMIC CAP.	SL J 47PF/50V	3S41470T
C250	CERAMIC CAP.	Y M 0. 01UF/16V	3Y4D103T
	CERAMIC CAP.	F Z 0. 01UF/16V	1220842T
C251	CERAMIC CAP.	SL J 56PF/50V	3S41560T
C252	CERAMIC CAP.	Y M 0. 01UF/16V	3Y4D103T
	CERAMIC CAP.	F Z 0. 01UF/16V	1220842T
C253	CERAMIC CAP.	SL J 56PF/50V	3S41560T
C254	CERAMIC CAP.	Y M 0. 01UF/16V	3Y4D103T
	CERAMIC CAP.	F Z 0. 01UF/16V	1220842T
C281	ELECTROLYTIC CAP.	220UF/6. 3V M	126A227S

REF. NO.	DESCRIPTION		PART NO.
C282	ELECTROLYTIC CAP.	10UF/16V M	126C106S
C283	ELECTROLYTIC CAP.	3. 3UF/50V M	126F335S
C284	ELECTROLYTIC CAP.	3. 3UF/50V M	126F335S
C285	CERAMIC CAP.	Y M 0. 01UF/16V	3Y4D103T
	CERAMIC CAP.	F Z 0. 01UF/16V	1220842T
C533	ELECTROLYTIC CAP.	100UF/25V M	126D107S
C551	SEMICONDUCTOR CAP.	F Z 0. 1UF/25V	1220520S
C552	SEMICONDUCTOR CAP.	F Z 0. 1UF/25V	1220520S
C901	CERAMIC CAP.	F Z 0. 047UF/12V	32F1473S
C902	CERAMIC CAP.	Y M 0. 01UF/16V	3Y4D103T
	CERAMIC CAP.	F Z 0. 01UF/16V	1220842T
C903	ELECTROLYTIC CAP.	100UF/6. 3V M	126A107S
C904	CERAMIC CAP.	F Z 0. 022UF/25V	122Z122T
	CERAMIC CAP.	F Z 0. 022UF/25V	1220843T
C905	CERAMIC CAP.	F Z 0. 047UF/12V	32F1473S
C911	CERAMIC CAP.	Y M 0. 01UF/16V	3Y4D103T
	CERAMIC CAP.	F Z 0. 01UF/16V	1220842T
C912	ELECTROLYTIC CAP.	33UF/6. 3V M	126A336S
C961	ELECTROLYTIC CAP.	47UF/6. 3V M	126A476S
C962	SEMICONDUCTOR CAP.	SR K 0. 015UF/25V	12Y2153S
C963	CERAMIC CAP.	F Z 0. 022UF/25V	122Z122T
	CERAMIC CAP.	F Z 0. 022UF/25V	1220843T
C964	ELECTROLYTIC CAP.	1UF/50V M NP	126X105S
C965	ELECTROLYTIC CAP.	1UF/50V M	126F105S
C966	ELECTROLYTIC CAP.	1UF/50V M	126F105S
C967	CERAMIC CAP.	F Z 0. 022UF/25V	122Z122T
	CERAMIC CAP.	F Z 0. 022UF/25V	1220843T
C968	SEMICONDUCTOR CAP.	SR K 0. 047UF/25V	12Y2473S
C969	CERAMIC CAP.	F Z 0. 047UF/12V	32F1473S
C970	ELECTROLYTIC CAP.	10UF/16V M	126C106S
C971	ELECTROLYTIC CAP.	10UF/16V M	126C106S
C972	ELECTROLYTIC CAP.	2. 2UF/50V M NP	126X225S
C973	ELECTROLYTIC CAP.	8. 2UF/16V M	126C825S
C974	ELECTROLYTIC CAP.	47UF/6. 3V M	126A476S
C975	MYLAR CAP.	0. 033UF/50V J	1254333S
C976	ELECTROLYTIC CAP.	47UF/6. 3V M	126A476S
C977	CERAMIC CAP.	F Z 0. 047UF/12V	32F1473S
C978	CERAMIC CAP.	SL J 10PF/50V	3S41100T
C979	ELECTROLYTIC CAP.	47UF/6. 3V M	126A476S
C980	CERAMIC CAP.	B J 330PF/50V	3B41331T
C981	MYLAR CAP.	0. 15UF/50V J	1254154S
C982	CERAMIC CAP.	B J 820PF/50V	3B41821T
C983	CERAMIC CAP.	B J 390PF/50V	3B41391T
C984	ELECTROLYTIC CAP.	47UF/6. 3V M	126A476S
CN-9	CONNECTOR ASS' Y	JP150/2590	0VE400486
CN-10	PIN HEADER, ANGLE, 17P	6030B-1-17Z027-T	5700342
CN-11	PIN HEADER, ANGLE, 17P	6030B-1-17Z027-T	5700342
CN-12	PIN HEADER, ANGLE, 10P	6030B-1-10Z027-T	5700335
D281	DIODE	1SS254	A1SS254T77**
	DIODE	US1040M	US1040MT
	DIODE	GMB01B	GMB01BT
D282	DIODE	1SS254	A1SS254T77**
	DIODE	US1040M	US1040MT
	DIODE	GMB01B	GMB01BT

REF. NO.	DESCRIPTION		PART NO.
D901	DIODE	1SS254	A1SS254T77**
	DIODE	US1040M	US1040MT
	DIODE	GMB01B	GMB01BT
D902	DIODE	1SS254	A1SS254T77**
	DIODE	US1040M	US1040MT
	DIODE	GMB01B	GMB01BT
IC241	IC	M52063SP	GM52063SP***
IC281	IC	LA7311	14LQ528
IC554 ⚠	IC, MOTOR DRIVER	BA6219B	14LF232
IC903	IC	BA728	BA728
IC961	IC, SERVO CONTROL	MN6748FVAN	14DN362
IC962	IC	BU4053B	14LF166
	IC(SWITCHING)	NJU4053BD	14D0436
IC963	IC	BU4053B	14LF166
	IC(SWITCHING)	NJU4053BD	14D0436
IC964	IC	BU4053B	14LF166
	IC(SWITCHING)	NJU4053BD	14D0436
L241	INDUCTOR	100UH-K-26T	LLAXKATTU101
	INDUCTOR	100UH-K-26T	LLAXKDTKA101
L961	INDUCTOR	100UH-K-26T	LLAXKATTU101
	INDUCTOR	100UH-K-26T	LLAXKDTKA101
L2033	SCREW, TAPPING, BIND HEAD	M3X10	DBM13100
M 6	HEATSINK, IC	VD40308/K1000U6	6S50527
Q241	RES. BUILT-IN TRANSISTOR	DTA114ES	A114ESZ
Q901	TRANSISTOR	2SC1740(Q)	C1740QZ
	TRANSISTOR	2SC1740(R)	C1740RZ
	TRANSISTOR	2SC536SP(E)	C536SEZ
	TRANSISTOR	2SC536SP(F)	C536SFZ
Q911	TRANSISTOR	2SC1740(Q)	C1740QZ
	TRANSISTOR	2SC1740(R)	C1740RZ
	TRANSISTOR	2SC536SP(E)	C536SEZ
	TRANSISTOR	2SC536SP(F)	C536SFZ
Q961	TRANSISTOR	2SC2058(P)	C2058PZ
	TRANSISTOR	2SC2058(Q)	C2058QZ
	TRANSISTOR	2SC2839(E)	C2839EZ
	TRANSISTOR	2SC2839(F)	C2839FZ
R242	CARBON RES.	1/5W J 1K OHM	1324102T
	CARBON RES.	1/6W J 1K OHM	132A102T
R243	CARBON RES.	1/5W J 15K OHM	1324153T
	CARBON RES.	1/6W J 15K OHM	132A153T
R244	CARBON RES.	1/5W J 33K OHM	1324333T
	CARBON RES.	1/6W J 33K OHM	132A333T
R245	CARBON RES.	1/5W J 18K OHM	1324183T
	CARBON RES.	1/6W J 18K OHM	132A183T
R246	CARBON RES.	1/5W J 6.8K OHM	1324682T
	CARBON RES.	1/6W J 6.8K OHM	132A682T
R247	CARBON RES.	1/5W J 33K OHM	1324333T
	CARBON RES.	1/6W J 33K OHM	132A333T
R248	CARBON RES.	1/5W J 2.7K OHM	1324272T
	CARBON RES.	1/6W J 2.7K OHM	132A272T
R249	CARBON RES.	1/5W J 220 OHM	1324221T
	CARBON RES.	1/6W J 220 OHM	132A221T
R250	CARBON RES.	1/5W J 2.7K OHM	1324272T
	CARBON RES.	1/6W J 2.7K OHM	132A272T
R251	CARBON RES.	1/5W J 680 OHM	1324681T
	CARBON RES.	1/6W J 680 OHM	132A681T

REF. NO.	DESCRIPTION		PART NO.
R252	CARBON RES.	1/5W J 680 OHM	1324681T
	CARBON RES.	1/6W J 680 OHM	132A681T
R253	CARBON RES.	1/5W J 47K OHM	1324473T
	CARBON RES.	1/6W J 47K OHM	132A473T
R254	CARBON RES.	1/5W J 1K OHM	1324102T
	CARBON RES.	1/6W J 1K OHM	132A102T
R281	CARBON RES.	1/5W J 10K OHM	1324103T
	CARBON RES.	1/6W J 10K OHM	132A103T
R282	CARBON RES.	1/5W J 820 OHM	1324821T
	CARBON RES.	1/6W J 820 OHM	132A821T
R283	CARBON RES.	1/5W J 18K OHM	1324183T
	CARBON RES.	1/6W J 18K OHM	132A183T
R284	CARBON RES.	1/5W J 22K OHM	1324223T
	CARBON RES.	1/6W J 22K OHM	132A223T
R285	CARBON RES.	1/5W J 1M OHM	1324105T
	CARBON RES.	1/6W J 1M OHM	132A105T
R551	CARBON RES.	1/5W J 2.7K OHM	1324272T
	CARBON RES.	1/6W J 2.7K OHM	132A272T
R552	CARBON RES.	1/5W J 2.7K OHM	1324272T
	CARBON RES.	1/6W J 2.7K OHM	132A272T
R553	METAL RES.	2W J 1.5 OHM	1330456
	METAL RES.	2W J 1.5 OHM	1330319
R901	CARBON RES.	1/5W J 56K OHM	1324563T
	CARBON RES.	1/6W J 56K OHM	132A563T
R902	CARBON RES.	1/5W J 1K OHM	1324102T
	CARBON RES.	1/6W J 1K OHM	132A102T
R903	CARBON RES.	1/5W J 1K OHM	1324102T
	CARBON RES.	1/6W J 1K OHM	132A102T
R904	CARBON RES.	1/5W J 56K OHM	1324563T
	CARBON RES.	1/6W J 56K OHM	132A563T
R905	CARBON RES.	1/5W J 10K OHM	1324103T
	CARBON RES.	1/6W J 10K OHM	132A103T
R906	CARBON RES.	1/5W J 56K OHM	1324563T
	CARBON RES.	1/6W J 56K OHM	132A563T
R907	CARBON RES.	1/5W J 47K OHM	1324473T
	CARBON RES.	1/6W J 47K OHM	132A473T
R908	CARBON RES.	1/5W J 100K OHM	1324104T
	CARBON RES.	1/6W J 100K OHM	132A104T
R911	CARBON RES.	1/5W J 10K OHM	1324103T
	CARBON RES.	1/6W J 10K OHM	132A103T
R912	CARBON RES.	1/5W J 10K OHM	1324103T
	CARBON RES.	1/6W J 10K OHM	132A103T
R913	CARBON RES.	1/5W J 10K OHM	1324103T
	CARBON RES.	1/6W J 10K OHM	132A103T
R914	CARBON RES.	1/5W J 3.9K OHM	1324392T
	CARBON RES.	1/6W J 3.9K OHM	132A392T
R915	CARBON RES.	1/5W J 100 OHM	1324101T
	CARBON RES.	1/6W J 100 OHM	132A101T
R916	CARBON RES.	1/5W J 22K OHM	1324223T
	CARBON RES.	1/6W J 22K OHM	132A223T
R917	CARBON RES.	1/5W J 3.3K OHM	1324332T
	CARBON RES.	1/6W J 3.3K OHM	132A332T
R918	CARBON RES.	1/5W J 100K OHM	1324104T
	CARBON RES.	1/6W J 100K OHM	132A104T
R919	CARBON RES.	1/5W J 680 OHM	1324681T
	CARBON RES.	1/6W J 680 OHM	132A681T

REF. NO.	DESCRIPTION		PART NO.
R961	CARBON RES.	1/5W J 10K OHM	1324103T
	CARBON RES.	1/6W J 10K OHM	132A103T
R962	CARBON RES.	1/5W J 2.2K OHM	1324222T
	CARBON RES.	1/6W J 2.2K OHM	132A222T
R963	CARBON RES.	1/5W J 4.7K OHM	1324472T
	CARBON RES.	1/6W J 4.7K OHM	132A472T
R964	CARBON RES.	1/5W J 1K OHM	1324102T
	CARBON RES.	1/6W J 1K OHM	132A102T
R965	CARBON RES.	1/5W J 2.2K OHM	1324222T
	CARBON RES.	1/6W J 2.2K OHM	132A222T
R966	CARBON RES.	1/5W G 10K OHM	1354103T
R967	CARBON RES.	1/5W G 10K OHM	1354103T
R968	CARBON RES.	1/5W J 100 OHM	1324101T
	CARBON RES.	1/6W J 100 OHM	132A101T
R969	CARBON RES.	1/5W J 33K OHM	1324333T
	CARBON RES.	1/6W J 33K OHM	132A333T
R970	CARBON RES.	1/5W J 1K OHM	1324102T
	CARBON RES.	1/6W J 1K OHM	132A102T
R971	CARBON RES.	1/5W J 1K OHM	1324102T
	CARBON RES.	1/6W J 1K OHM	132A102T
R972	CARBON RES.	1/5W J 10K OHM	1324103T
	CARBON RES.	1/6W J 10K OHM	132A103T
R973	CARBON RES.	1/5W J 10K OHM	1324103T
	CARBON RES.	1/6W J 10K OHM	132A103T
TP241	TEST PIN	RT-08T-1.3BT	1770482
TP242	TEST PIN	RT-08T-1.3BT	1770482
TP243	TEST PIN	RT-08T-1.3BT	1770482
TP961	TEST PIN	RT-08T-1.3BT	1770482
TP962	TEST PIN	RT-08T-1.3BT	1770482
VR241	CARBON P.O.T.	10K OHM	238A342Y
	CARBON P.O.T.	10 KOHM	238N509Y
VR961	CARBON P.O.T.	100K OHM	238A348Y
	CARBON P.O.T.	100 KOHM	238N513Y
VR962	METAL P.O.T.	200KOHM B	1380877
	METAL P.O.T.	200K OHM B	238J620
X961	X'TAL	3.579545MHZ	1811371
	X'TAL	3.58MHZ	1811389

REF. NO.		DESCRIPTION		PART NO.
PSV C.B.A.				
AC601	⚠	AC CORD	EP-549-E17	5750192
B2- 7		SHIELD, BOTTOM	U1-SSC K2590	0VM200561
B2- 8		SHIELD, TOP	U1-SSC K2590	0VM200562
		PLATE, SHIELD	K2590ZA	0VM300723
B2- 9		ANGLE	U1-SSC K2590	0VM401935
B2-10		HOLDER	K2590ZA	0VM402185
		SHIELD	K2590ZA	0VM402375
B2-11		HEATSINK, IC	K2590ZA	0VM402223
C601	⚠	SAFTY CAP.	0.047UF/250V	122Z793
		SAFTY CAP.	0.047UF/250V	122Z792
		MATALLIZED FILM CAP.	0.047UF/250V M	CTE2EM*00473
C602	⚠	SAFTY CAP.	0.047UF/250V	122Z793
		SAFTY CAP.	0.047UF/250V	122Z792
		MATALLIZED FILM CAP.	0.047UF/250V M	CTE2EM*00473
C603	⚠	SAFETY CAP.	0.0022UF/400V	122Z796
		SAFETY CAP.	0.0022UF/400V	122Z797
C604	⚠	SAFETY CAP.	0.0022UF/400V	122Z796
		SAFETY CAP.	0.0022UF/400V	122Z797
C605	⚠	SAFETY CAP.	0.0022UF/400V	122Z796
		SAFETY CAP.	0.0022UF/400V	122Z797
C607	⚠	ELECTROLYTIC CAP.	68UF/400V	122Z799
C608	⚠	MP CAP.	0.01UF/630V(K)	122Z650
		METALLIZED FILM CAP.	B K 0.01UF/630V	CTC2KK*00103
C609	⚠	CERAMIC CAP.	SL J 330PF/1KV	CA3A331MR506
		CERAMIC CAP.	R K 330PF/1KV	CA3A331MR507
C610		ELECTROLYTIC CAP.	100UF/16V M	126C107S
C611		MYLAR CAP.	0.0047UF/50V J	1254472S
C612		ELECTROLYTIC CAP.	10UF/50V M	126F106S
C613	⚠	ELECTRORYTIC CAP.	1000UF/25V M	CA1E108NC505
C614		ELECTROLYTIC CAP.	100UF/16V M	126C107S
C615	⚠	ELECTROLYTIC CAP.	2200UF/16V M W/F	626C228
C616		ELECTROLYTIC CAP.	100UF/10V M	126B107S
C617		MYLAR CAP.	0.033UF/50V J	1254333
CN-1		ANGLE PIN HEADER, 6P	173979-6	1770251
D601	⚠	DIODE	S1WB60	AS1WB60*****
D602		DIODE	AP01C	AAP01CV00000
D604		DIODE	AU01Z	AAU01ZV0****
D605		DIODE	AU01Z	AAU01ZV0****
D606		DIODE	AU01Z	AAU01ZV0****
D607		DIODE	RL-2Z	ARL2Z******
D608		DIODE	AU01Z	AAU01ZV0****
F601	⚠	FUSE	T1.00A/250V	1790481
IC601	⚠	IC	STR11006	GSTR11006***
IC602	⚠	VOLTAGE REGULATOR IC	AN7812F	AN7812F
		VOLTAGE REGULATOR IC	NJM7812FA	14L0251
IC603	⚠	VOLTAGE REGULATOR IC	AN7805F	AN7805F
		VOLTAGE REGULATOR IC	NJM7805FA	J7805FA
L2P02		SCREW, A-TIGHT, BIND HEAD	M3X8	DBM13080
L2Q01		SCREW, S-TIGHT, BIND HEAD	M3X5	GBMS3050
L2Q02		SCREW, S-TIGHT, BIND HEAD	M3X5	GBMS3050
L2Q03		SCREW, S-TIGHT, BIND HEAD	M3X5	GBMS3050
L2Q04		SCREW, S-TIGHT, BIND HEAD	M3X5	GBMS3050
M601		FUSE HOLDER		1790424
M602		FUSE HOLDER		1790424

REF. NO.		DESCRIPTION		PART NO.
M604		HOLDER, AC CORD	VD5853	6S50286
Q601		TRANSISTOR	2SD1384(Q)	D1384QZ
		TRANSISTOR	2SD1384(R)	D1384RZ
		TRANSISTOR	2SD1207(S)	D1207SZ
		TRANSISTOR	2SD1207(T)	D1207TZ
R601	⚠	WIREWOUND RES.	2W 3.9 OHM	5330518
R602	⚠	METAL RES.	2W J 82K OHM	1330513
R603		CARBON RES.	1/5W J 240K OHM	1324244T
		CARBON RES.	1/6W J 240K OHM	132A244T
R604		CARBON RES.	1/5W J 240K OHM	1324244T
		CARBON RES.	1/6W J 240K OHM	132A244T
R605	⚠	METAL RES.	1W J 0.27 OHM	1330382
R606		CARBON RES.	1/5W J 1K OHM	1324102T
		CARBON RES.	1/6W J 1K OHM	132A102T
R607		CARBON RES.	1/5W J 1K OHM	1324102T
		CARBON RES.	1/6W J 1K OHM	132A102T
R608	⚠	METAL RES.	2W J 100 OHM	5330001
		METAL RES.	2W J 100 OHM	5330171
R609	⚠	METAL RES.	2W J 33 OHM	1330988
		METAL RES.	2W J 33 OHM	5330159
R610		CARBON RES.	1/5W J 4.7 OHM	1324479T
		CARBON RES.	1/6W J 4.7 OHM	132A479T
T601	⚠	POWER TRANS	TE0049T	LTT**ZPMS001
T602		LINE FILTER	ELF18D290C	LLBE***MS005
	⚠	CORD STOPPER	SR-4N-4	1790173

IN

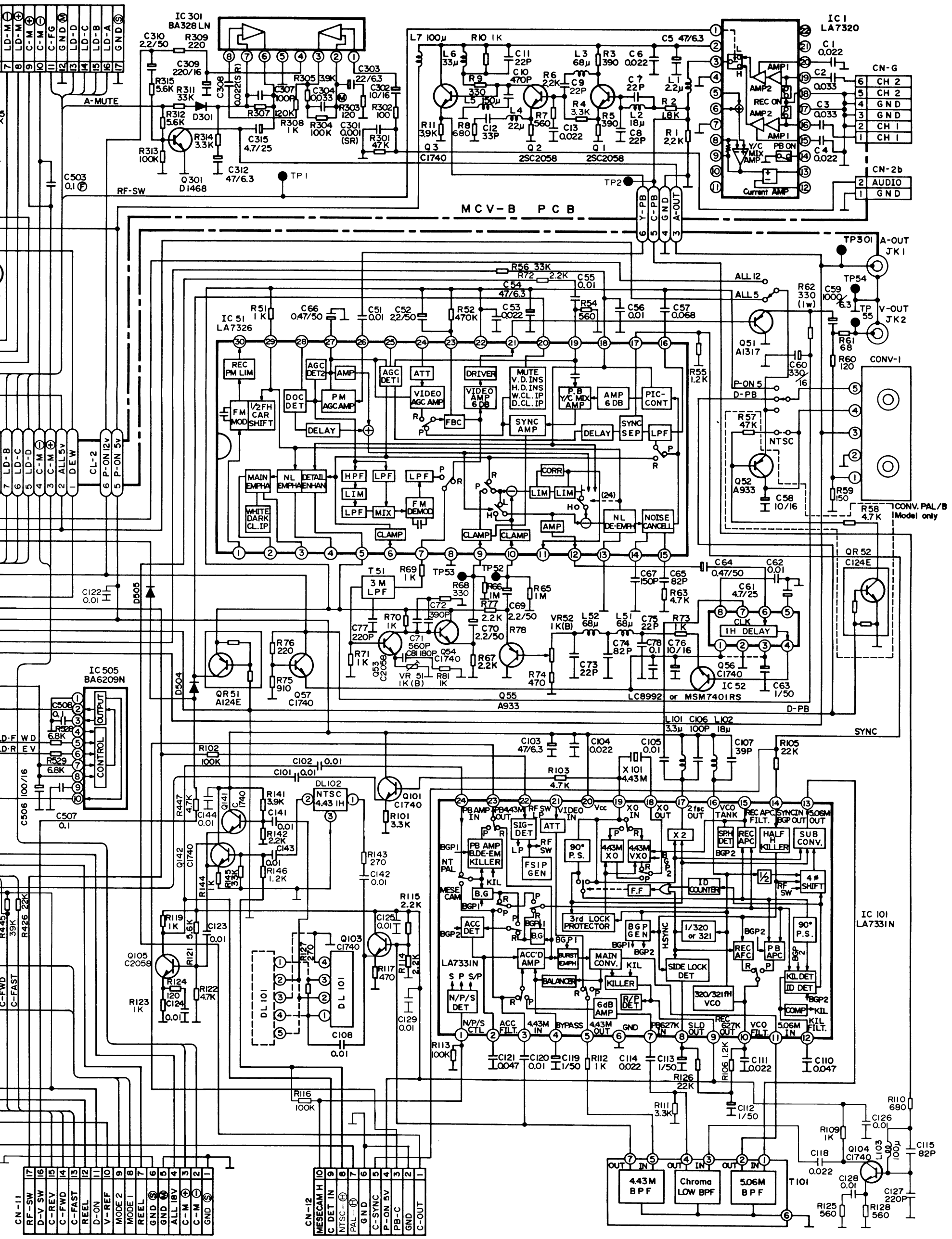
MCV-B PCB
IC 301 BA328LN
IC 1 LA7320
IC 51 LA7326
IC 505 BA6209N
IC 101 LA7331N
CN-G
CN-2b
CN-11
CN-12
CONV-1
A-OUT JK1
V-OUT JK2
CONV. PAL/B Model only
A-MUTE
RF-SW
D-PB
SYNC
ALL 12
ALL 5
P-ON 5
NTSC
Q51 A1317
Q52 A933
Q55 A933
Q56 C1740
IC 52 LC8992 or MSM7401RS
QR 52 C124E
QR 51 A124E
Q57 C1740
Q101 C1740
Q103 C1740
Q104 C1740
Q105 C2058
DL 101
DL102 NTSC 4.43 1H
T 51 3M LPF
T101
4.43M BPF
Chroma LOW BPF
5.06M BPF
REC PM LIM
AGC DET2
AMP
AGC DET1
ATT
DRIVER
MUTE V.D.INS H.D.INS W.CL.IP D.CL.IP
P.B Y/C MIX AMP
AMP 6DB
PIC-CONT
DOC DET
PM AGC AMP
VIDEO AGC AMP
VIDEO AMP 6DB
FM MOD
1/2FH CAR SHIFT
DELAY
FBC
SYNC AMP
SYNC SEP
LPF
MAIN EMPHA
NL EMPHA
DETAIL ENHAN
WHITE DARK CL.IP
HPF
LIM
MIX
FM DEMOD
CLAMP
CORR
NL DE-EMPH
NOISE CANCELL
1H DELAY
CLK
PB AMP IN
PB443M OUT
RF SW LP
VIDEO IN
Vcc
XO IN
XO OUT
2fsc OUT
VCO TANK
REC APC FILT.
SYNCIN BGP OUT
5.06M OUT
SIG-DET
FSIP GEN
PB AMP B.DE-EM KILLER
B.G
ACC DET
ACC'D AMP
BURST EMPH
MAIN CONV.
KILLER
BALANCER
6dB AMP
R/P DET
N/P/S DET
3rd LOCK PROTECTOR
BGP GEN
1/320 or 321
REC AFC
PB APC
SIDE LOCK DET
320/321fH VCO
90° P.S.
4.43M XO
4.43M VXO
X2
F.F
ID COUNTER
SPH DET
REC APC
HALF H KILLER
SUB CONV.
4φ SHIFT
KIL DET
ID DET
COMP
N/P/S CTL
ACC FILT.
4.43M IN
BYPASS
4.43M OUT
GND
PB627K IN
SLD OUT
REC 627K OUT
VCO FILT.
5.06M IN
KIL FILT.

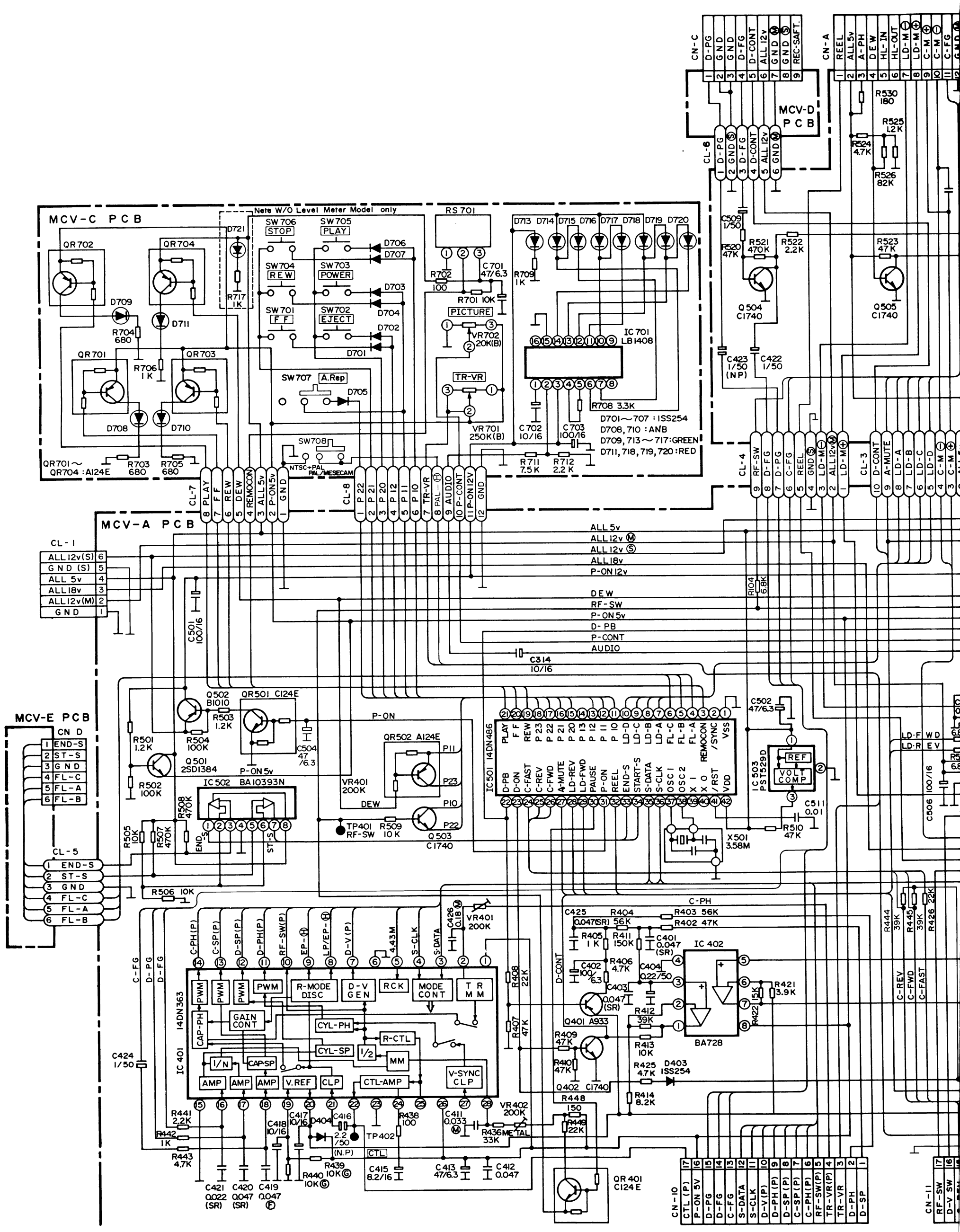
MCV-C PCB
MCV-D PCB
MCV-A PCB
MCV-E PCB
Note W/O Level Meter Model only
CN-C
CN-A
CL-6
CL-7
CL-8
CL-4
CL-3
CL-1
CL-5
CN-10
CN-11
CN D
IC 501 14DN486
IC 502 BA10393N
IC 401 14DN363
IC 402
BA728
IC 701 LB1408
IC 503 PST529D
RS 701
SW 706 STOP
SW 705 PLAY
SW 704 REW
SW 703 POWER
SW 701 FF
SW 702 EJECT
SW 707 A.Rep
SW708
PICTURE
TR-VR
VR702 20K(B)
VR701 250K(B)
VR401 200K
VR402 200K
X501 3.58M
Q504 C1740
Q505 C1740
Q502 B1010
Q501 2SD1384
Q503 C1740
Q401 A933
Q402 C1740
QR401 C124E
QR501 C124E
QR502 A124E
QR701～QR704 : A124E
D701～707 : 1SS254
D708, 710 : ANB
D709, 713～717 : GREEN
D711, 718, 719, 720 : RED
ALL 5v
ALL 12v (M)
ALL 12v (S)
ALL 18v
P-ON 12v
DEW
RF-SW
P-ON 5v
D-PB
P-CONT
AUDIO
C-PH
P-ON
NTSC+PAL
PAL/MESECAM
TP401 RF-SW
TP402
PWM
R-MODE DISC
D-V GEN
RCK
MODE CONT
T R M M
GAIN CONT
CYL-PH
CYL-SP
R-CTL
MM
AMP
V.REF
CLP
CTL-AMP
V-SYNC CLP
CAP-PH
CAP-SP
I/N
I/2
REF
VOLT COMP
METAL
CTL
(N.P)